US008476887B2

(12) **United States Patent**
Tateishi et al.

(10) **Patent No.: US 8,476,887 B2**
(45) **Date of Patent: Jul. 2, 2013**

(54) **DC TO DC CONVERTER WITH PSEUDO CONSTANT SWITCHING FREQUENCY**

(75) Inventors: **Tetsuo Tateishi**, Nagoya Aichi (JP); **Shinobu Aoki**, Kita-Nagoya Aichi (JP)

(73) Assignee: **Texas Instruments Incorporated**, Dallas, TX (US)

(*) Notice: Subject to any disclaimer, the term of this patent is extended or adjusted under 35 U.S.C. 154(b) by 960 days.

(21) Appl. No.: **12/367,384**

(22) Filed: **Feb. 6, 2009**

(65) **Prior Publication Data**

US 2009/0140708 A1 Jun. 4, 2009

Related U.S. Application Data

(63) Continuation-in-part of application No. 11/256,869, filed on Oct. 24, 2005, now Pat. No. 7,652,461.

(60) Provisional application No. 61/077,792, filed on Jul. 2, 2008, provisional application No. 60/632,921, filed on Dec. 3, 2004.

(51) **Int. Cl.**
G05F 1/40 (2006.01)

(52) **U.S. Cl.**
USPC **323/284**; 323/285

(58) **Field of Classification Search**
USPC 323/222, 225, 282–288, 351
See application file for complete search history.

(56) **References Cited**

U.S. PATENT DOCUMENTS

4,683,529 A * 7/1987 Bucher, II 363/44
5,180,964 A * 1/1993 Ewing 323/222
5,764,495 A 6/1998 Faulk
6,212,079 B1 4/2001 Balakrishnan et al.
6,956,361 B1 * 10/2005 Mozipo et al. 323/283
7,023,192 B2 * 4/2006 Sutardja et al. 323/283
7,202,609 B2 4/2007 Langeslag et al.
7,417,879 B2 * 8/2008 Sawtell 363/89
7,443,148 B2 * 10/2008 Weng 323/271
7,482,793 B2 * 1/2009 Stoichita 323/282
7,492,133 B2 * 2/2009 Yoshikawa 323/222
7,576,529 B2 * 8/2009 Ishino 323/284
7,652,461 B2 * 1/2010 Tateishi 323/284

OTHER PUBLICATIONS

Texas Instruments Incorporated, Complete DDR, DDR2 and DDR3 Memory Power Solution Synchronous Buck Controller . . . , TPS51116 data sheet, May 2004-Jun. 2008, www.ti.com, USA.
Texas Instruments Incorporated, Dual D-CAP™ Synchronous Step-Down Controller for Notebook Power Rails, TPS51427 data sheet, Apr.-Sep. 2008, www.ti.com, USA.

* cited by examiner

Primary Examiner — Jessica Han
(74) *Attorney, Agent, or Firm* — William B. Kempler; Wade J. Brady, III; Frederick J. Telecky, Jr.

(57) **ABSTRACT**

Various apparatuses, methods and systems for a DC to DC converter with a pseudo constant switching frequency are disclosed herein. For example, some embodiments provide a DC to DC converter having a switch connected to a switching node to control a voltage of the switching node, and a switching controller that is adapted to turn on and off the switch at a substantially constant frequency based at least in part on the voltage of the switching node. The switching controller includes a modulator connected to a control electrode of the switch and that is adapted to actuate and deactuate the switch, and a first timer that is connected to the switching node and to the modulator. The first timer uses the voltage of the switching node to determine an on-time for the switch.

11 Claims, 4 Drawing Sheets

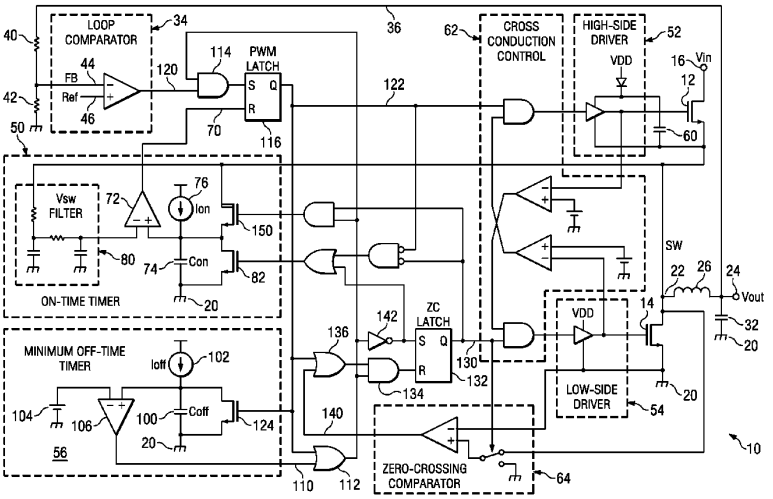

REED EX1005
IPR2024-01158

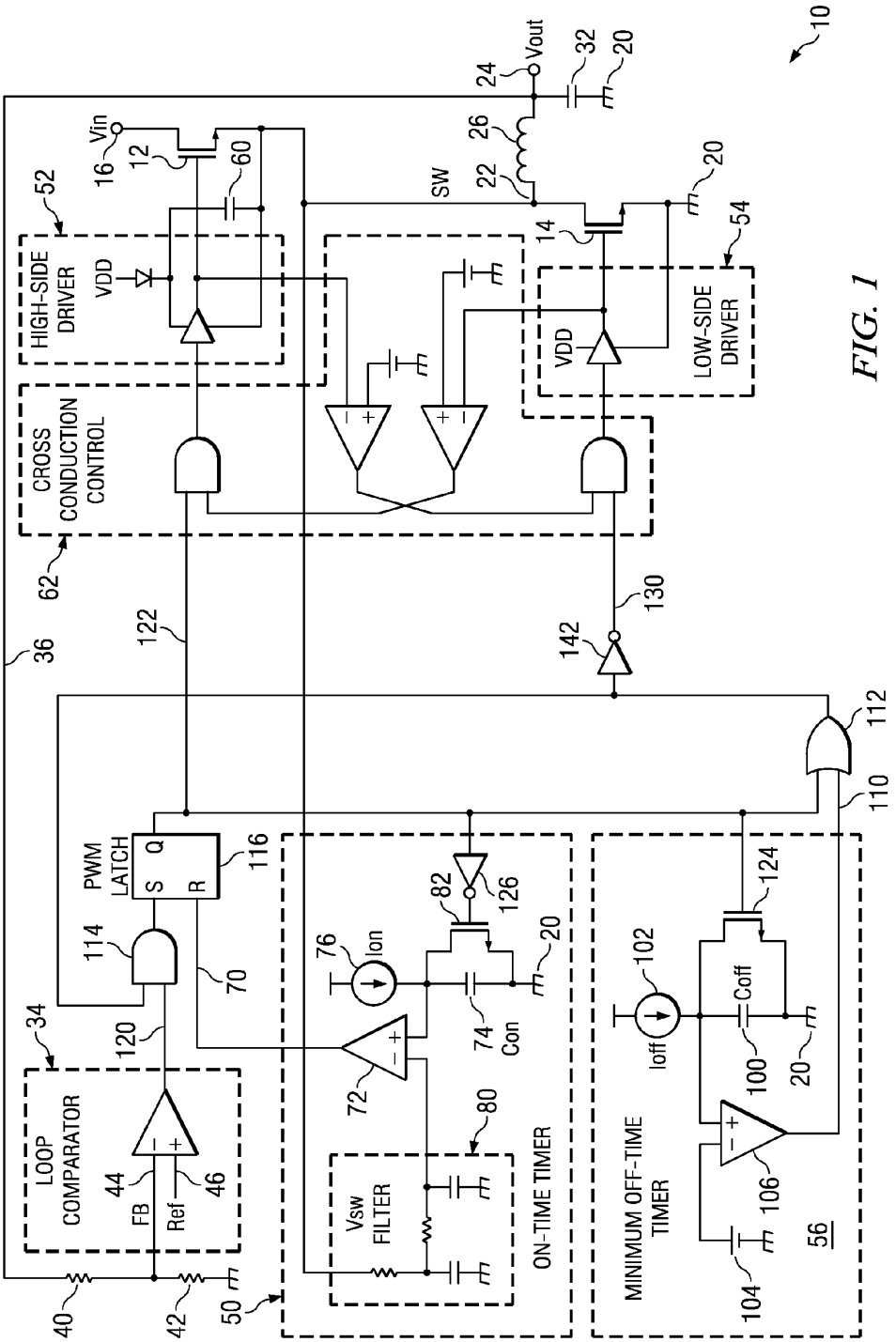

FIG. 1

REED EX1005
IPR2024-01158

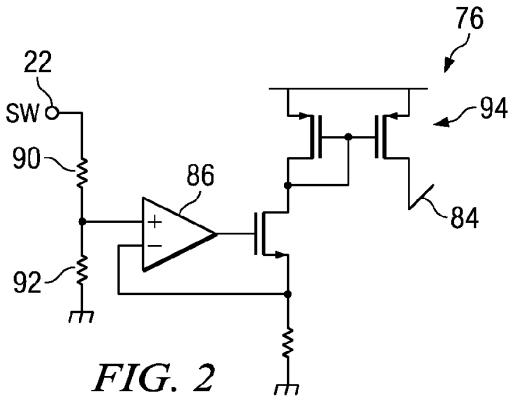

FIG. 2

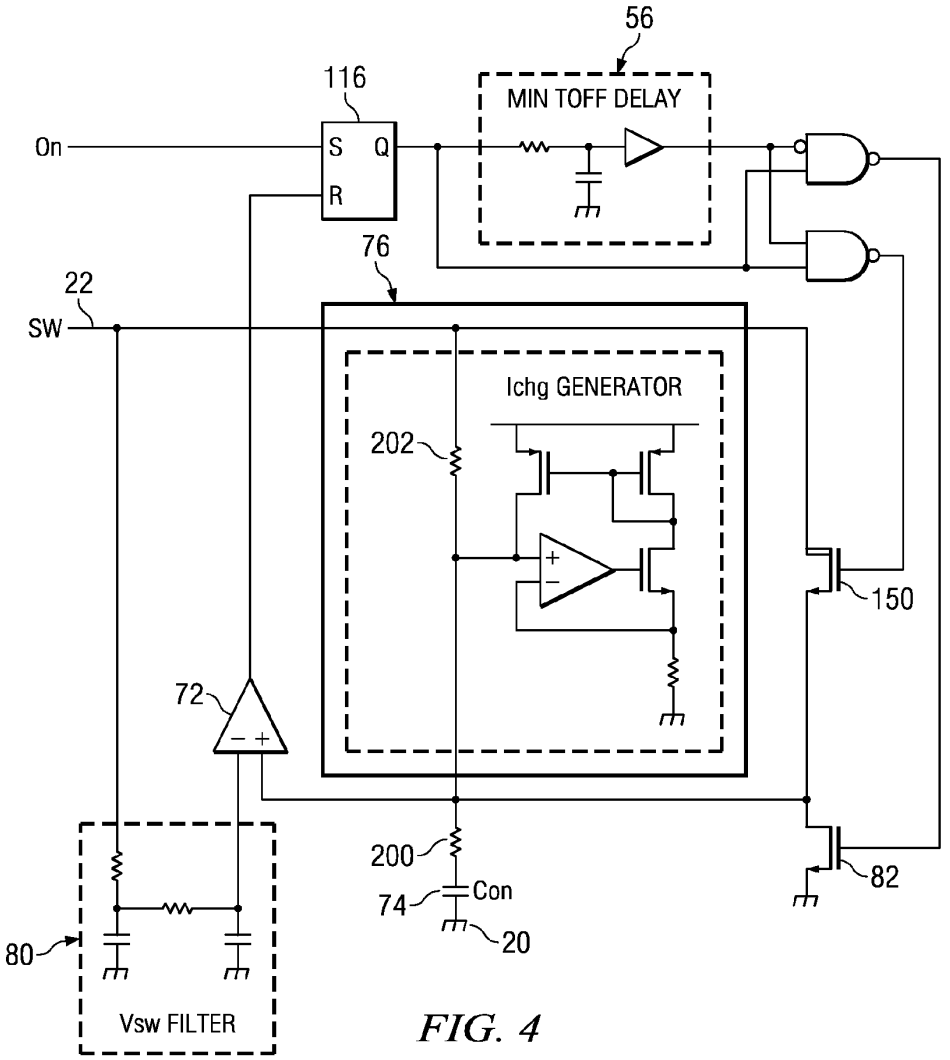

FIG. 4

REED EX1005
IPR2024-01158

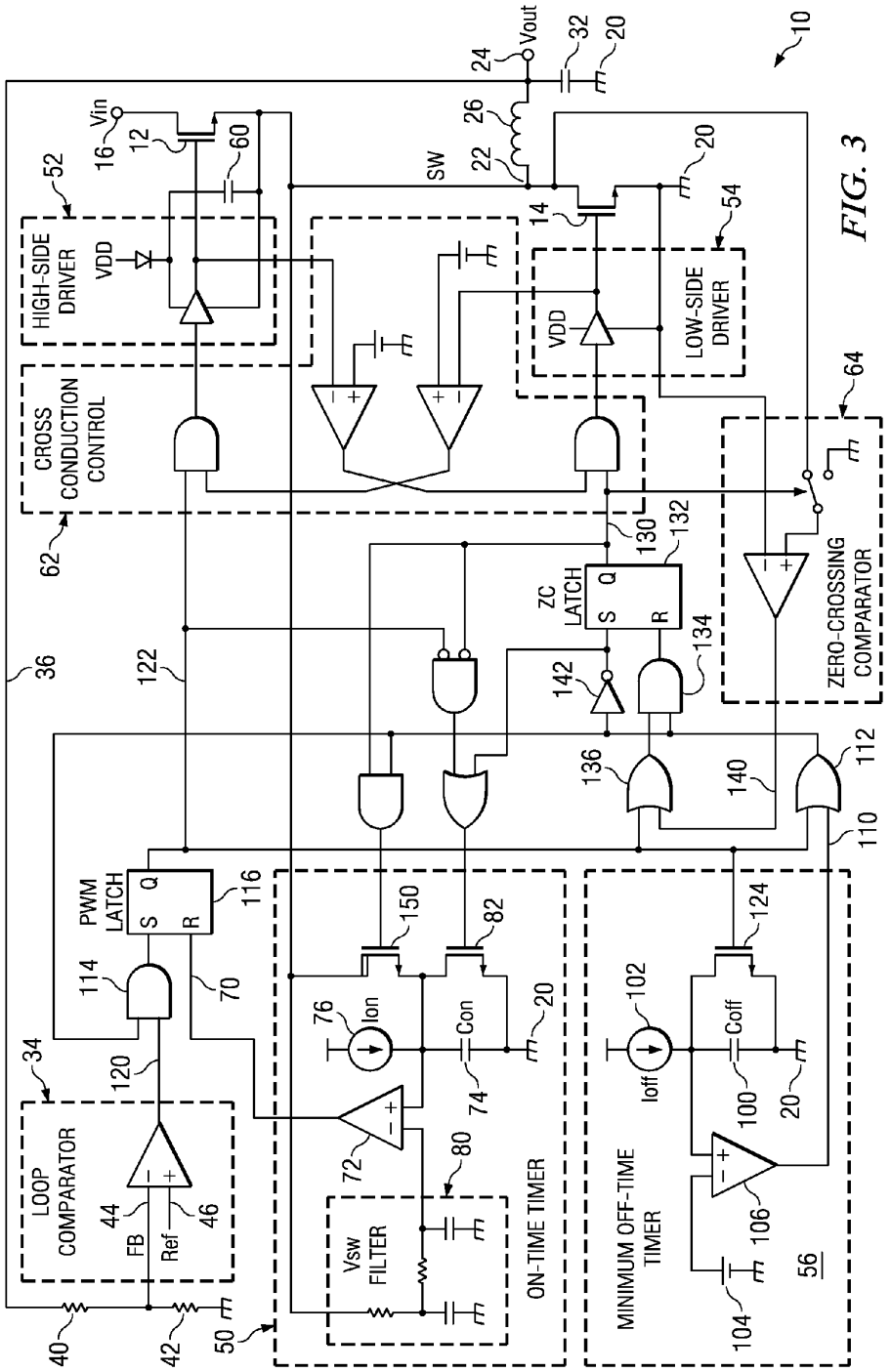

FIG. 3

REED EX1005
IPR2024-01158

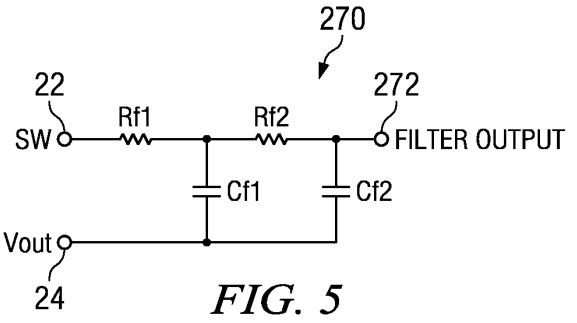

FIG. 5

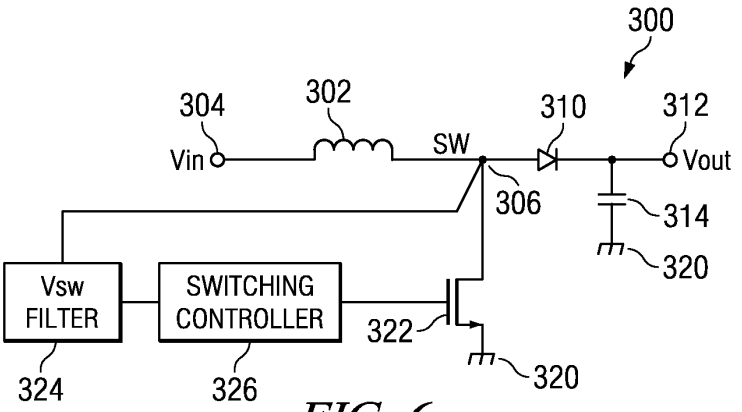

FIG. 6

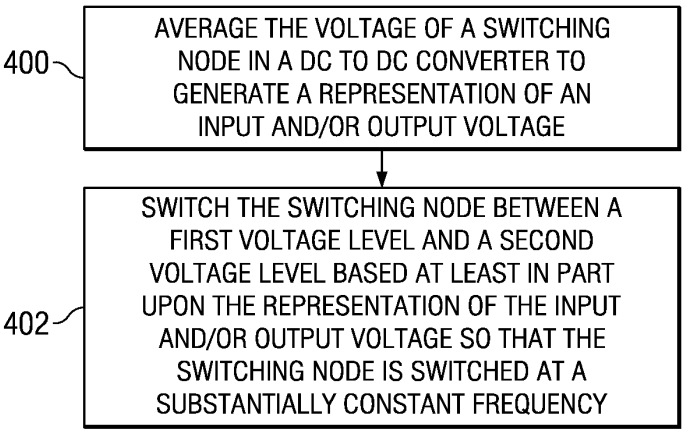

FIG. 7

REED EX1005
IPR2024-01158

DC TO DC CONVERTER WITH PSEUDO CONSTANT SWITCHING FREQUENCY

CROSS REFERENCE TO RELATED APPLICATION

This application is a continuation-in-part of U.S. patent application Ser. No. 11/256,869, entitled "High Efficiency Power Converter Operating Free of an Audible Frequency Range" and filed on Oct. 24, 2005 (now U.S. Pat. No. 7,652,461), which claims priority to U.S. Patent Application Ser. No. 60/632,921, entitled "High Efficiency DC/DC Converter Operating Out of an Audible Frequency Range" and filed on Dec. 3, 2004. This application also claims priority to U.S. Provisional Patent Application No. 61/077,792, entitled "ON-TIME GENERATION CIRCUIT FOR PSEUDO FIXED FREQUENCY DC/DC CONVERTER BASED UPON SWITCHING NODE INFORMATION" and filed on Jul. 2, 2008. The aforementioned applications are assigned to an entity common hereto, and the entirety of the aforementioned applications are each incorporated herein by reference for all purposes.

BACKGROUND

Many types of electronic systems use DC to DC converters to provide electrical power, particularly portable battery powered devices that require a lower or higher voltage than is directly supplied by the batteries or by other electronic systems requiring multiple voltage levels internally. DC-DC converters process an incoming direct current (DC) voltage and generate an output of a different voltage. DC to DC converters may also regulate the output voltage so that input voltage variations and changing load conditions do not substantially alter the output voltage. A number of different types of DC to DC converters are known, such as buck converters and boost converters.

Many of these are switching regulators, which rapidly switch on and off to transfer packets of energy from an input to an output. The duty cycle of the switching can be controlled to adjust the output voltage, and various circuit configurations are known to provide outputs with higher or lower voltage than the input. Switching regulators are typically very efficient, but have some characteristics to be controlled or minimized such as output voltage ripple. Because of the switching nature of these DC to DC converters, the output voltage may have some ripple despite the use of filters at the output. Stable, or predictable, switching frequency is preferred to simplify selection of such output filter components.

Some examples of prior art systems are U.S. Pat. No. 6,212,079; U.S. Pat. No. 7,202,609; and U.S. Pat. No. 5,764,495.

SUMMARY

Various apparatuses, methods and systems for a DC to DC converter with a pseudo constant switching frequency are disclosed herein. For example, some embodiments provide a DC to DC converter having a switch connected to a switching node to control a voltage of the switching node, and a switching controller that is adapted to turn on and off the switch at a substantially constant frequency based at least in part on the voltage of the switching node. The switching controller includes a modulator connected to a control electrode of the switch and that is adapted to actuate and deactuate the switch, and a first timer that is connected to the switching node and to the modulator. The first timer uses the voltage of the switching node to determine an on-time for the switch.

Other embodiments provide methods of converting DC to DC signals, including averaging a voltage of a switching node in a DC to DC converter to generate a representation of a boundary voltage, and switching the switching node between a first voltage level and a second voltage level based at least in part upon the representation of the boundary voltage so that the switching node is switched at a substantially constant frequency. In some embodiments of the methods, the DC to DC converter comprises a buck converter, the boundary voltage comprises an output voltage and the switching node comprises a node between a high side switch and a low side switch. In other embodiments of the methods, the DC to DC converter comprises a boost converter, the boundary voltage comprises an input voltage and the switching node comprises a node between a first switch to an output node and a second switch to ground. Various embodiments of the methods also include charging an energy storage device during an on-time and discharging the energy storage device during an off-time, wherein the energy storage device is charged with a current that is proportional to a difference between an input voltage level and a voltage level across a high side switch. The methods also include comparing the representation of the output voltage with a voltage level of the energy storage device, wherein the switching node is switched when a result of the comparing changes state. In various embodiments of the methods, the charging is terminated when the voltage level of the energy storage device reaches a termination voltage level or a combination of the output voltage and a voltage level across an output inductor. The termination voltage level may also include the voltage level across a low side switch.

Yet other embodiments provide a DC to DC buck converter having a high side switch and a low side switch connected in series between an input voltage and a lower reference voltage, with a switching node between the high side and low side switch. The input of a low pass filter is connected to the switching node. An inductor is connected between the switching node and an output node. The input of a switching controller is connected to the low pass filter output, and the output is connected to control inputs on the high and low side switches. The switching controller is not directly connected to the output node. The switching controller is adapted to turn on and off the at least one switch at a substantially constant frequency based at least in part on the low pass filter output. The switching controller is adapted to place the DC to DC buck converter in an on state with the high side switch on and the low side switch off, and in an off state with the high side switch off and the low side switch on. An on-time during which the DC to DC buck converter is in the on state is proportional to an output voltage of the output node and is inversely proportional to the input voltage. The switching controller includes a comparator with a first input connected to the low pass filter output and a second input connected to a reference voltage generator. The switching controller input is connected to the comparator output. The reference voltage generator includes a capacitor connected between the second input of the comparator and ground. The reference voltage generator also includes a bypass transistor connected in parallel with the capacitor. The switching controller is adapted to turn on the bypass transistor during off-time. The reference voltage generator also includes a reference current source connected to the second input of the comparator. The current level from the reference current source is proportional to a voltage which represents the switch node voltage during an on-time. The reference voltage generator also includes a pre-charging transistor connected between the second input of the

REED EX1005
IPR2024-01158

comparator and the switching node. The switching controller is adapted to turn on the precharging transistor during at least a portion of the off time to charge the capacitor to a voltage level of the switching node during the off-time.

This summary provides only a general outline of some particular embodiments. Many other objects, features, advantages and other embodiments will become more fully apparent from the following detailed description, the appended claims and the accompanying drawings.

BRIEF DESCRIPTION OF THE DRAWINGS

A further understanding of the various embodiments may be realized by reference to the figures which are described in remaining portions of the specification. In the figures, like reference numerals may be used throughout several drawings to refer to similar components.

FIG. **1** depicts an example of a DC to DC buck converter with a pseudo constant switching frequency.

FIG. **2** depicts a reference current source that may be used in the DC to DC buck converter of FIG. **1**.

FIG. **3** depicts an example of a DC to DC buck converter with a pseudo constant switching frequency that takes into consideration off-time low side switch voltage.

FIG. **4** depicts an example of various portions of another DC to DC buck converter with a pseudo constant switching frequency.

FIG. **5** depicts an embodiment of a switch node voltage filter.

FIG. **6** depicts an example of a DC to DC boost converter with a pseudo constant switching frequency.

FIG. **7** depicts a flow chart of a method of converting DC to DC signals.

DESCRIPTION

The drawings and description, in general, disclose various embodiments of DC to DC converters with pseudo constant switching frequency. The switching frequency is controlled by a switching controller in the DC to DC converters based upon feedback from the switching node, without a direct connection to the output node. In various embodiments of integrated circuit DC to DC converters, the switching node is connected to a pin on the integrated circuit, to which external filtering components such as inductors, resistors and capacitors may be added. The use of feedback from the switching node to establish the pseudo constant switching frequency avoids the need to provide a pin on the integrated circuit for direct feedback from the output node at the far end of the external filtering components.

Referring now to FIG. **1**, an example of a DC to DC buck converter **10** will be described. A high side switch **12** and a low side switch **14** are connected in series between an input Vin **16** and ground **20**, with a switching node **22** between the high side switch **12** and the low side switch **14**. An output Vout **24** is connected to the switching node **22** through an output filter. For example, the output filter may include an inductor **26** connected between the switching node **22** and the output Vout **24**, and capacitor **32** connected in series between the output Vout **24** and ground **20**. Note that in some integrated circuit embodiments, the high side switch **12** and the low side switch **14** are integrated components on the integrated circuit and the switching node **22** is at an output pin of the integrated circuit, and the inductor **26** and capacitor **32** are external components. In these embodiments, the output Vout **24** is not accessible inside the integrated circuit without providing an input pin on the integrated circuit for feedback from the output Vout **24**. Thus, integrated circuit DC to DC converters that rely on feedback from the output Vout to establish a pseudo constant switching frequency would require an extra pin on the integrated circuit.

The DC to DC buck converter **10** of FIG. **1** establishes a pseudo constant switching frequency for the switching node **22** based on feedback from the switching node **22** rather than from the output Vout **24**. During an on-time, the high side switch **12** is turned on and the low side switch **14** is turned off, allowing current to flow from the input Vin **16** to the output Vout **24** through the inductor **26**. During an off-time, the low side switch **14** is turned on and the high side switch **12** is turned off. The output filter **26** and **32** averages the voltage at the switching node **22**, creating a DC voltage at the output Vout **24** that is lower than at the input Vin **16**. A loop comparator **34** in the DC to DC buck converter **10** begins each on-time based on a feedback signal **36** from the output Vout **24**. The voltage of the feedback signal **36** is divided in an external voltage divider made up of an upper resistor **40** and a lower resistor **42**. Generally, resistors **40** and **42** in an integrated circuit DC to DC buck converter **10** are external components, provided by the user of the integrated circuit to set the desired voltage level at the output Vout **24**. Thus, the voltage level at the output Vout **24** is generally not available without an external feedback pin on the integrated circuit. When the divided feedback voltage **44** falls below a reference voltage **46**, the loop comparator **34** starts the on-time. An on-time timer **50** ends the on-time after a period calculated to maintain a substantially constant switching frequency, or pseudo constant frequency.

The DC to DC buck converter **10** may contain various other components as desired, such as a high-side driver **52** and low side driver **54** used to drive the high side switch **12** and low side switch **14**, respectively. If an NMOS transistor is used as the high side switch **12**, a minimum off-time timer **56** may be provided to charge a drive capacitor **60** used to power the high-side driver **52**. In the absence of a minimum off-time timer **56**, the overall off-time is established by loop comparator **34**. The drive capacitor **60** is powered during each off-time, and the minimum off-time timer **56** ensures that the DC to DC buck converter **10** remains in the off-time sufficiently long to charge the drive capacitor **60** for the next on-time. A cross-conduction controller **62** may be provided, ensuring that the high side switch **12** and low side switch **14** are never turned on at the same time.

The operation of the on-time timer **50** in establishing a pseudo constant switching frequency will now be described. Assuming that the resistance of the high side switch **12** and the low side switch **14** and the parasitic DC resistance (DCR) of the inductor **26** are all low enough to be ignored, the output capacitance **32** is large enough and the voltage of the output Vout **24** can be considered to be constant, the following equations can be derived:

$$I1=I0+Ton*(Vin-Vout)/L \quad (1)$$

$$I2=I1-Toff*Vout/L \quad (2)$$

Where

I0: inductor current at beginning of an on-time

I1: inductor current at the end of the on-time

I2: inductor current at the end of the off-time

Ton: duration of on-time

Toff: duration of off-time

L: inductance of inductor **26**

Vin: voltage at the input Vin **16**

Vout: voltage at the output Vout **24**

REED EX1005
IPR2024-01158

During steady state operation, the current I2 through the inductor **26** at the end of the off-time should equal the current I0 through the inductor **26** at the beginning of the on-time, giving the following equations:

$$Ton*(Vin-Vout)=Toff*Vout \quad (3)$$

$$Ton+Toff=Ton*Vin/Vout \quad (4)$$

According to equation (4), it is possible to keep the switching period (Ton+Toff) constant by changing Ton proportional to Vout and inversely proportional to Vin. Voltage Vin is also generally representative of the voltage of the switching node voltage during the on state. Relationships between various voltages and states are described and claimed herein, such as proportionalities between various voltages and state durations. These relationships may be established without directly accessing the referenced nodes. For example, the DC to DC buck converter **10** establishes an on-time Ton that is proportional to Vout without directly accessing the output node, and that is inversely proportional to Vin without accessing the input node. Thus, statements of proportionality and other relationships made in the claims or description herein do not imply a direct connection to the cited nodes.

Referring again to FIG. **1**, the on-time timer **50** generates an on-time termination signal **70** that ends the on-time. The on-time is generated using a comparator **72**, a capacitor Con **74** and a charging current from a current source **76** which is proportional to the input voltage of the power stage at input Vin **16**. The capacitor Con **74** is discharged to ground **20** during an off-time. Once an on-time is initiated by the loop comparator **34**, the capacitor Con **74** is charged by the current from the current source **76**. The comparator **72** monitors the voltage of the capacitor Con **74** and asserts the on-time termination signal **70** to terminate the on-time when the voltage of the capacitor Con **74** reaches a reference voltage. If a feedback path from the output Vout **24** were provided, the comparator **72** would compare the voltage of the capacitor Con **74** with the voltage of the output Vout **24** and terminate the on-time when the voltage of the capacitor Con **74** reaches the voltage at the output Vout **24**. This would cause the on-time to be a function of the voltage at the input Vin **16** and the voltage at the output Vout **24**, with the on-time proportional to the input Vin **16** and inversely proportional to the output Vout **24**. The switching period or frequency would thus become constant over a range of Vin and Vout values in steady state, achieving a pseudo constant switching frequency.

The pseudo constant switching frequency may be achieved without direct feedback from the output Vout **24** by using feedback from the switching node **22** and considering the on resistance of the high side switch **12** and the low side switch **14** and the parasitic resistance of the inductor **26**. Using the switch node voltage even provides more accurate and stable frequency to load current change compared to conventional method of using input voltage or output voltage directly. Equations (1) and (2) are modified as follows:

$$I1=I0+Ton*(Vin-Vout-Von1-Vdcr1)/L \quad (5)$$

$$I2=I1-Toff*(Vout+Von2+Vdcr2)/L \quad (6)$$

Where

Von**1**: average voltage across high side switch **12** during on-time

Von**2**: average voltage across low side switch **14** during off-time

Vdcr**1**: average voltage across DCR of inductor **26** during on-time

Vdcr**2**: average voltage across DCR of inductor **26** during off-time

During steady state operation, the current I2 through the inductor **26** at the end of the off-time should equal the current I0 through the inductor **26** at the beginning of the on-time. Also, the average voltage Vdcr**1** across the DCR of inductor **26** during the on-time should be the same as the average voltage Vdcr**2** across the DCR of inductor **26** during the off-time because the average current during the on-time is equal to the average current during the off-time through the inductor **26**. The following equations are therefore derived from equations (5) and (6):

$$Ton*(Vin-Von1-Vout-Vdcr)=Toff*(Vout+Vdcr+Von2) \quad (7)$$

$$Ton+Toff=Ton*(Vin-Von1+Von2)/(Vout+Vdcr+Von2) \quad (8)$$

Where

Vdcr=Vdcr**1**=Vdcr**2**

Thus the capacitor Con **74** is charged with a current proportional to (Vin−Von**1**+Von**2**), and the on-time is terminated when the voltage across the capacitor Con **74** reaches (Vout+Vdcr+Von**2**) to achieve pseudo fixed frequency operation.

The voltage of (Vin−Von**1**) may be obtained from the voltage at the switching node **22** when the high side switch **12** is on. The voltage of (Vout+Vdcr) may be obtained by averaging the voltage at the switching node **22** for an entire switching period Ton+Toff. Note that Vout can be used as a representative of (Vout+Vdc) if the Vdcr is small enough compared to Vout. The averaging of the voltage at the switching node **22** for an entire switching period is performed by a Vsw (switching node voltage) filter **80** connected between the switching node **22** and the comparator **72**. The voltage of (−Von**2**) may be obtained from the voltage at the switching node **22** when the low side switch **14** is on. Thus, all the voltage information required for pseudo fixed frequency on-time generation may be obtained from the voltage at the switching node **22**. In many applications, Von**2** is low enough compared with Vin and Vout to be ignored. By ignoring Von**2**, the following approximate equation is derived from equation (8):

$$Ton+Toff=Ton*(Vin-Von1)/(Vout+Vdcr) \quad (9)$$

Based upon equation (9), a pseudo on-time generation algorithm is obtained as follows:

Discharge capacitor Con **74** to 0V during off-time

Charge capacitor Con **74** during on-time with a current proportional to (Vin−Von**1**)

Terminate on-time when the voltage on capacitor Con **74** becomes (Vout+Vdcr)

The DC to DC buck converter **10** of FIG. **1** implements this pseudo on-time generation algorithm. During an off-time, a discharging transistor **82** is turned on to discharge the capacitor Con **74** to ground **20**. During the on-time, the capacitor Con **74** is charged with a current proportional to (Vin−Von**1**) from the current source **76**. The on-time is terminated by the comparator **72** when the voltage on the capacitor Con **74** reaches (Vout+Vdcr) as generated by the Vsw filter **80**. The Vsw filter **80** is a low pass filter that may be implemented in any desired manner, such as the two resistor, two capacitor example shown in FIG. **1**, or with more or less resistors or capacitors, or any other desired implementation including even active filters. The time constant of the Vsw filter **80** is selected to be large enough against the switching period of the DC to DC buck converter **10** to achieve a stable voltage for the comparator **72**.

One example of a current source **76** that produces an output **84** proportional to (Vin−Von**1**) is illustrated in FIG. **2**.

REED EX1005
IPR2024-01158

Because the voltage at the switching node **22** becomes (Vin−Von**1**) during the on-state, the amplifier **86** connected as a voltage follower produces an output current that is proportional to the voltage at the switching node **22**. A voltage divider including an upper resistor **90** and lower resistor **92** may be used to sample the voltage at the switching node **22** before buffering in the voltage follower amplifier **86**. The current from the amplifier **86** is mirrored by a current mirror **94**. The voltage divider **90** and **92**, voltage follower amplifier **86** and current mirror **94** all operate in a linear fashion, so the current output **84** of the current source **76** is proportional to the voltage of the switching node **22**. It is possible to connect the resistor **90** to Vin instead of the switch node when (Von**1**) is small enough compared to (Vin).

Referring again to FIG. **1**, the operation of the DC to DC buck converter **10** will be described in more detail. An on-time may be initiated by the loop comparator **34** after a minimum off-time as set by the minimum off-time timer **56**. (Note that the DC to DC buck converter **10** is not limited to any particular embodiment of a minimum off-time timer **56**, and that the minimum off-time timer **56** illustrated in FIG. **1** is just one example.) The minimum off-time may be detected when a capacitor Coff **100** is charged by a reference current source **102** to match a reference voltage **104**. After the minimum off-time, a comparator **106** asserts the output **110** of the minimum off-time timer **56** which passes through an OR gate **112** to an AND gate **114** at the Set input of an SR latch **116**. The output **120** of the loop comparator **34** is combined with the output **110** of the minimum off-time timer **56** in the AND gate **114** at the input of the SR latch **116**. Thus, after the minimum off-time timer **56** has measured the minimum off-time and when the loop comparator **34** detects that the voltage at the output Vout **24** has fallen below a reference voltage **46**, the Set input of the SR latch **116** is asserted to begin an on-time. The output **122** of the SR latch **116** is thus asserted, turning on the high side switch **12** and turning off the low side switch **14**. The output **122** of the SR latch **116** also drives a discharging transistor **124** in the minimum off-time timer **56**, discharging the capacitor Coff **100** to ground **20** when the on-time begins. The output **122** also drives the discharging transistor **82** in the on-time timer **50** through an inverter **126**, so that during an off-time, the capacitor Con **74** is discharged to ground **20** and during an on-time, the discharging transistor **82** is turned off allowing the capacitor Con **74** to be charged by the current source **76**.

During the on-time, the voltage at the switching node **22** is pulled up to a positive value of (Vin−Von**1**) to drive current through the inductor **26** to the output Vout **24**. The capacitor Con **74** in the on-time timer **50** is charged by the current source **76** with a current proportional to (Vin−Von**1**). When the voltage on the capacitor Con **74** reaches (Vout+Vdcr), the average voltage of the switching node **22** across an entire switching period as generated by the Vsw filter **80**, a pulse is produced on the on-time termination signal **70** from the on-time timer **50**. The on-time termination signal **70** is connected to the Reset input of the SR latch **116**, turning off the output **122** of the SR latch **116**. This turns off the high side switch **12**. This also turns off the discharging transistor **124** in the minimum off-time timer **56**, allowing the capacitor Coff **100** to be charged by the reference current source **102**. This also turns on the discharging transistor **82** in the on-time timer **50**, discharging the capacitor Con **74** to ground **20** and ending the pulse on the on-time termination signal **70**, allowing the next on-time to be started by the loop comparator **34** and minimum off-time timer **56** as described above. Note, however, that the low side switch **14** is not immediately turned on at the end of the on-time.

For certain low voltage applications, Von**2** is not small enough with respect to Vout to be ignored, but is small enough with respect to Vin to be ignored. Given this assumption, the following approximate equation may be derived from equation (8):

$$Ton+Toff=Ton*(Vin-Von1)/(Vout+Vdcr+Von2) \quad (10)$$

Based upon equation (10), a pseudo on-time generation algorithm is obtained as follows:

Discharge capacitor Con **74** to 0V during off-time

Charge capacitor Con **74** during on-time with a current proportional to (Vin−Von**1**)

Terminate on-time when the voltage on capacitor Con **74** becomes (Vout+Vdcr+Von**2**)

The DC to DC buck converter **10** of FIG. **3** implements this pseudo on-time generation algorithm. The DC to DC buck converter **10** of FIG. **3** operates in much the same manner as that of FIG. **1**. When the off-state is initiated by the on-time timer **50**, the discharging transistor **82** is turned on and the capacitor Con **74** is discharged to ground **20**. However, after the minimum off-time, which is generated by the minimum off-time timer **56**, the discharging transistor **82** is turned off and a precharging transistor **150** is turned on to precharge the capacitor Con **74** to (−Von**2**).

In an embodiment corresponding to the DC to DC buck converter **10** of FIG. **3** in which zero crossing is not detected. In this embodiment, the timing of the DC to DC buck converter **10** is adapted so that the inductor current is not allowed to reach zero so that no zero crossing is detected. In this embodiment, the capacitor Con **74** is left at a precharged level of (−Von**2**). Again, the DC to DC buck converter **10** of FIG. **3** operates in much the same manner as that of FIG. **1**. When the off-state is initiated by the on-time timer **50**, the discharging transistor **82** is turned on and the capacitor Con **74** is discharged to ground **20**. After the minimum off-time, which is generated by the minimum off-time timer **56**, the discharging transistor **82** is turned off and a precharging transistor **150** is turned on to precharge the capacitor Con **74** to (−Von**2**). The current through the inductor **26** decreases but does not reach zero in this embodiment, so no zero-crossing is detected. The capacitor Con **74** thus reaches about (−Von**2**) during the off time. Once the loop comparator **34** initiates the on-time, the precharging transistor **150** is turned off and the high side switch **12** is turned on. Because the switching node **22** becomes (Vin−Von**1**) during the on-time, the current source **76** in the on-time timer **50** becomes proportional to (Vin−Von**1**). The voltage of the switching node **22** is filtered by the Vsw filter **80** to settle at a voltage of (Vout+Vdcr). The comparator **72** in the on-time timer **50** generates a pulse on the on-time termination signal **70** and terminates the on-time when the voltage on the capacitor Con **74** reaches (Vout+Vdcr). However, because the capacitor Con **74** started the on-time at about (−Von**2**), the entire voltage change on capacitor Con **74** before it reaches (Vout+Vdcr) is (Vout+Vdcr+Von**2**). In this embodiment, the on-time is therefore proportional to (Vout+Vdcr+Von**2**) and inversely proportional to (Vin−Von**1**).

In another embodiment corresponding to the DC to DC buck converter **10** of FIG. **3** a zero crossing is detected. As with the DC to DC buck converter **10** of FIG. **1**, the current through the inductor **26** decreases and becomes zero, and the voltage at the switching node **22** rises above ground **20**. The zero-crossing comparator **64** detects this zero crossing and turns off the low side switch **14** through the zero crossing SR latch **132**. At the same time, the precharging transistor **150** is turned off and the discharge switch **82** is turned on and maintains the voltage across the capacitor **100** at zero. Because the

REED EX1005
IPR2024-01158

switching node **22** becomes (Vin−Von**1**) during the on-time, the current source **76** in the on-time timer **50** becomes proportional to (Vin−Von**1**). The voltage of the switching node **22** is filtered by the Vsw filter **80** to settle at a voltage of (Vout+Vdcr). The comparator **72** in the on-time timer **50** generates a pulse on the on-time termination signal **70** and terminates the on-time when the voltage on the capacitor Con **74** reaches (Vout+Vdcr). In this embodiment, the on-time is proportional to (Vout+Vdcr) and inversely proportional to (Vin−Von**1**). In this case, the Von**2** is zero because the current through the inductor **26** becomes zero, so (Vout+Vdcr) is actually equal to (Vout+Vdcr+Von**2**).

In one particular embodiment, referring to portions of FIG. **3**, precharging transistor **150** may be included in a DC to DC converter as an error compensator to compensate for (−Von**2**) in the equations set forth herein, without including the Vsw filter **80**. This improves the switching frequency stability while minimizing the die area of the DC to DC converter by omitting the Vsw filter **80** in the buck converter of FIG. **3**. Similarly, a precharging transistor **150** may be used in a boost converter without filtering the feedback from the switching node.

Various elements of another embodiment of a DC to DC buck converter **10** are illustrated in FIG. **4**, including portions of the on-time timer **50**. Specifically, this embodiment includes a resistor **200** connected in series with the capacitor Con **74** to compensate for circuit delays such as in comparators, drivers, external MOSFETS, etc, thereby reducing frequency dependency on the input Vin **16**. The input voltage to the amplifier **86** in the current source **76** is connected to the charging input to the comparator **72** and to the switching node **22** through a resistor **202**, rather than driving the amplifier **86** by a voltage divider from the switching node **22** as in FIG. **2**. The current source **76** may be embodied in other various configurations as desired to provide an output current that is proportional to (Vin−Von**1**).

The term "switching controller" is used herein to refer to the various portions of the DC to DC buck converter **10** and other DC to DC converters that control the switching of the switching node (e.g., **22**). The functions of the switching controller may be distributed across various circuitry of the DC to DC buck converter **10**. For example, a switching controller may include portions of the on-time timer **50**, high-side driver **52**, low side driver **54**, cross-conduction controller **62**, zero-crossing comparator **64** and associated logic such as the SR latch **116** and zero crossing SR latch **132**. For example, it may also include a minimum off-time timer if the switch has a high-side NMOS transistor, requiring that a capacitor be charged during the minimum off-time to drive the high-side NMOS transistor. Additionally, the term "modulator" generally refers to modulation or switching circuitry. For example, modulator can include loop comparator **34**, drivers **52** and **54**, latch **116**, cross conduction control **62**, and any intermediate logic or components.

It is important to note that the equations and proportionalities set forth and claimed herein are ideal and do not explicitly take into consideration other effects such as ripple in the output voltage, current or propagation delay of each circuit. However, the disclosed and claimed equations and proportionalities apply to actual circuits that include these effects. In other words, the existence of output ripple does not prevent a circuit from conforming to the disclosed and claimed equations and proportionalities, and propagation delay can be cancelled by proper delay compensation circuitry.

Turning now to FIG. **5**, another embodiment of a switch node voltage filter **270** is illustrated that may be used in place of the Vsw filter **80**. In this embodiment, the switch node voltage filter **270** references Vout **24** instead of ground **20** to filter the voltage level of the switching node **22**. The switch node voltage filter **270** is a low pass filter that passes low frequency components of the voltage level of the switching node **22** at the filter output **272**, which is connected to the non-inverting input of the comparator **72**. As with the Vsw filter **80**, the switch node voltage filter **270** may comprise any desired components to form a low pass filter.

The application of a pseudo constant switching frequency is not limited to the DC to DC buck converter **10** described above, but may be adapted to other types of DC to DC converters. For example, as illustrated in FIG. **6**, a DC to DC boost converter **300** may adapted to switch at a pseudo constant frequency. In this embodiment, an inductor **302** is connected between an input Vin **304** and a switching node **306**. A diode **310** is connected between the switching node **306** and an output Vout **312**. A capacitor **314** is connected between the output Vout **312** and ground **320**. A switch **322** such as a MOSFET is connected between the switching node **306** and ground **320**. A Vsw filter **324** is connected to the switching node **306**, and a switching controller **326** is connected to a control input on the switch **322** and to the Vsw filter **324**. During an on-time, the switch **322** is turned on, and during an off-time, the switch **322** is off and the diode **310** conducts and deliver current to the output Vout **312**.

Assuming that the on resistance of the switch **322**, diode **310**, and the parasitic resistance DCR of the inductor **302** are all low enough to be ignored, and the output capacitance is large enough and the voltage of the output Vout **312** can be considered as a constant, the equations below may be derived:

$$I1=I0+Ton*Vin/L \tag{11}$$

$$I2=I1-Toff*(Vout-Vin)/L \tag{12}$$

Where

I**0**: inductor current at a beginning of an on-time

I**1**: inductor current at the end of the on-time

I**2**: inductor current at the end of the off-time

Ton: on-time

Toff: off-time

During steady state operation, the current I**2** through the inductor **302** at the end of the off-time should equal the current I**0** through the inductor **302** at the start of an on-time, leading to the following equation:

$$Ton*Vin=Toff*(Vout-Vin) \tag{13}$$

$$Ton+Toff=Toff*Vout/Vin \tag{14}$$

According to the equation (14), it is possible to keep the switching period (Ton+Toff) as a constant by changing Toff proportional to Vin **304** and inversely proportional to Vout **312**. Note that Vout is representative of the voltage of the switching node voltage during the off state. In actuality, the on resistance of the switch **322**, diode **310**, and the parasitic resistance DCR of the inductor **302** are not negligible and equations (13) and (14) are modified as follows:

$$I1=I0+Ton*(Vin-Von1-Vdcr1)/L1 \tag{15}$$

$$I2=I1-Toff*(Vout-Vin+Von2+Vdcr2)/L1 \tag{16}$$

Where

Von**1**: average voltage across the switch **322** during on-time

Von**2**: average voltage across the diode **310** during off-time

Vdcr**1**: average voltage across DCR of inductor **302** during on-time

Vdcr**2**: average voltage across DCR of inductor **302** during off-time

REED EX1005
IPR2024-01158

During steady state operation, the current I2 through the inductor **302** at the end of the off-time should equal the current I0 through the inductor **302** at the start of an on-time. Also, the average voltage Vdcr**1** across the DCR of inductor **302** during the on-time should be the same as the average voltage Vdcr**2** across the DCR of inductor **302** during the off-time because the average current during the on-time is equal to the average current during the off-time through the inductor **26**. The following equations are therefore derived from equations (15) and (16):

$$Ton*(Vin-Von1-Vdcr)=Toff*(Vout-Vin+Vdcr+Von2) \quad (17)$$

$$Ton+Toff=Toff*(Vout+Von2-Von1)/(Vin-Vdcr-Von1) \quad (18)$$

Where

Vdcr=Vdcr**1**=Vdcr**2**

Thus, the timing capacitor in the off-time timer of the switching controller **326** is charged with a current proportional to (Vout+Von**2**−Von**1**), and the on-time is terminated when the voltage across the timing capacitor becomes (Vin−Vdcr−Von**1**) to achieve pseudo fixed frequency operation.

The voltage of (Vout+Von**2**) can be obtained from the voltage at the switching node **306** during the off-time. The voltage of (Vin−Vdcr) can be obtained by averaging the voltage at the switching node **306**. Note that Vin can be used as a representative (Vin−Vdcr) if the Vdcr is small enough compared to Vin. The voltage of (Von**1**) can be obtained from the voltage at the switching node **306** when the switch **322** is on. Von**1** is usually small compared to (Vout+Von**2**) and may be ignored with small error. It is therefore possible to achieve pseudo constant switching frequency boost converter by setting the off-time as follows:

Discharge off-time timing capacitor to the voltage (Von**1**) of the switching node **306** during the on-time

At the start of the off-time, charge the timing capacitor with a current proportional to the voltage of the switching node **306**, or (Vout+Von**2**)

Terminate the off-time when the voltage of the timing capacitor reaches the averaged voltage of the switching node **306**, or (Vin−Vdcr)

The off-time can thus be controlled proportional to (Vin−Vdcr−Von**1**) and inversely proportional to (Vout+Von**2**). The voltage information required for pseudo fixed frequency off-time generation in the DC to DC boost converter **300** can be obtained from the voltage at the switching node **306**. It is possible to discharge off-time timing capacitor to GND if (Von**1**) is small enough compared to (Vin−Vdcr).

Referring now to FIG. **7**, a method for converting DC to DC signals will be summarized. The voltage of a switching node in a DC to DC converter is averaged to generate a representation of an output voltage for a buck converter or an input voltage for a boost converter. (Block **400**) This output or input voltage is also referred to herein as a boundary voltage. The switching node is switched between a first voltage level and a second voltage level based at least in part upon the representation of the voltage so that the switching node is switched at a substantially constant frequency. (Block **402**) Various embodiments of the method may also include charging an energy storage device such as a capacitor during an on-time and discharging the energy storage device during an off-time, wherein the energy storage device is charged with a current that is proportional to a difference between an input voltage level and a voltage level across a high side switch. The method may also include comparing the representation of the output voltage with a voltage level of the energy storage device, wherein the switching node is switched when a result of the comparing changes state. No connection to the input and output voltage nodes is needed to achieve a pseudo constant switching frequency, saving space in an integrated circuit. Most error factors which affect on the switching frequency in the DC to DC converter can be compensated for so that an almost constant switching frequency may be achieved, independent of load current, input or output voltage. The pseudo constant switching frequency may be applicable in various types of DC to DC converters.

While illustrative embodiments have been described in detail herein, it is to be understood that the concepts disclosed herein may be otherwise variously embodied and employed.

What is claimed is:

1. A DC to DC converter comprising:

a switch connected to a switching node to control a voltage of the switching node; and

a switching controller that is adapted to turn on and off the switch at a substantially constant frequency based at least in part on the voltage of the switching node, wherein the switching controller includes:

a modulator connected to a control electrode of the switch and that is adapted to actuate and deactuate the switch; and

a first timer that is connected to the switching node and to the modulator, wherein the first timer uses the voltage of the switching node to determine an on-time for the switch, wherein the first timer further comprises:

a comparator;

a low pass filter connected between the switching node and a first input of the comparator; and

a reference voltage generator that is connected to the modulator and a second input of the comparator.

2. The DC to DC converter of claim **1**, wherein the low pass filter further comprises:

a plurality of resistors coupled in series with one another and coupled between the switching node and the comparator; and

a plurality of capacitors, wherein each capacitor is coupled between at least one of the resistors and a reference voltage.

3. The DC to DC converter of claim **1**, wherein the converter further comprises:

a second switch that is connected between the switching node and a ground and that is connected to a second control electrode of the modulator, wherein the second switch is adapted to be actuated and deactuated by the modulator; and

an inductor that is connected between the switching node and an output node, wherein the switching controller is adapted to place the DC to DC converter in an on state with the switch on, and in an off state with the switch off, wherein the on-time during which the DC to DC converter is in the on state is proportional to an output voltage of the low pass filter and is inversely proportional to a voltage of the switching node voltage during the on state.

4. The DC to DC converter of claim **1**, wherein the reference voltage generator further comprises:

a capacitor having a first terminal connected to the second input of the comparator and a second terminal connected to a reference voltage;

a bypass transistor that is connected in parallel with the capacitor, wherein the switching controller is adapted to turn on the bypass transistor during at least a portion of the off-time; and

a reference current source connected to the first terminal of the capacitor.

REED EX1005
IPR2024-01158

5. The DC to DC converter of claim **4**, wherein a current level from the reference current source is proportional to a difference between the input voltage and a voltage across the high side switch during an on-time.

6. The DC to DC converter of claim **4**, wherein the reference voltage generator further comprises a precharging transistor connected between the second input of the comparator and the switching node, wherein the switching controller is adapted to turn on the precharging transistor during at least a portion of the off time to charge the capacitor to a voltage level of the switching node during the off-time.

7. The DC to DC converter of claim **1**, wherein the first timer further comprises:

a timing capacitor adapted to control a switching frequency;

a current source connected to the timing capacitor, the current source being adapted to charge the timing capacitor with a current proportional to the voltage of the switching node when the first switch is on; and

a second switch connected to the timing capacitor and being adapted to discharge the timing capacitor to the voltage of the switching node when the first switch is off, wherein the switching controller is adapted to turn off the first switch when the timing capacitor is charged to an average voltage of the switching node at least in continuous conduction mode.

8. The DC to DC converter of claim **7**, wherein the current source further comprises:

a voltage divider that is coupled to the switching node;

a voltage follower that is coupled to the voltage divider; and

a current mirror that is coupled to the voltage follower.

9. The DC to DC converter of claim **1**, wherein the DC to DC converter comprises a boost converter, the DC to DC converter further comprising a low pass filter connected between the switching node and the switching controller input, wherein at least one switch comprises a first switch and a second switch, the first switch being connected between the switching node and an output node, the second switch being connected between the switching node and a ground, further comprising an inductor connected between an input voltage and the switching node.

10. The DC to DC converter of claim **9**, wherein the switching controller is adapted to turn on and off the at least one switch, and wherein an off-time during which the at least one switch is off is proportional to an output voltage of said low pass filter and is inversely proportional to a voltage of the switching node voltage during the off state.

11. The DC to DC converter of claim **1**, wherein the DC to DC converter comprises a boost converter, the DC to DC converter further comprising an inductor connected between the switching node and an input voltage node, wherein the at least one switch comprises a first switch and a second switch, the first switch being connected between the switching node and a ground, the second switch being connected between the switching node and an output voltage node, and wherein the switching controller comprises:

a timing capacitor adapted to control a switching frequency;

a current source connected to the timing capacitor, the current source being adapted to charge the timing capacitor with a current proportional to the voltage of the switching node when the first switch is off; and

a third switch connected to the timing capacitor and being adapted to discharge the timing capacitor to the voltage of the switching node when the first switch is on, wherein the switching controller is adapted to turn on the first switch when the timing capacitor is charged to an average voltage of the switching node at least in continuous conduction mode.

* * * * *