US011620621B2

(12) **United States Patent**
Pollin et al.

(10) **Patent No.: US 11,620,621 B2**
(45) **Date of Patent: *Apr. 4, 2023**

(54) **ENROLLING A PAYER BY A MERCHANT SERVER OPERATED BY OR FOR THE BENEFIT OF A PAYEE AND PROCESSING A PAYMENT FROM THE PAYER BY A SECURE SERVER**

(71) Applicant: **Autoscribe Corporation**, Gaitherburg, MD (US)

(72) Inventors: **Robert Evan Pollin**, Rockville, MD (US); **Brian Edward Downey, Jr.**, Alexandria, VA (US); **Sean Allen Fleming**, Germantown, MD (US)

(73) Assignee: **Autoscribe Corporation**, Gaithersburg, MD (US)

(*) Notice: Subject to any disclaimer, the term of this patent is extended or adjusted under 35 U.S.C. 154(b) by 70 days.

This patent is subject to a terminal disclaimer.

(21) Appl. No.: **16/535,424**

(22) Filed: **Aug. 8, 2019**

(65) **Prior Publication Data**

US 2019/0362324 A1 Nov. 28, 2019

Related U.S. Application Data

(63) Continuation of application No. 15/408,185, filed on Jan. 17, 2017, now Pat. No. 10,423,940, which is a

(Continued)

(51) **Int. Cl.**
G06Q 20/10 (2012.01)
G06Q 20/12 (2012.01)

(Continued)

(52) **U.S. Cl.**
CPC ***G06Q 20/10*** (2013.01); ***G06Q 10/107*** (2013.01); ***G06Q 20/102*** (2013.01); ***G06Q 20/12*** (2013.01);

(Continued)

(58) **Field of Classification Search**
CPC G06Q 20/10; G06Q 10/107; G06Q 20/102; G06Q 20/12; G06Q 20/305; G06Q 20/40; G06Q 20/4014; G06Q 10/00
See application file for complete search history.

(56) **References Cited**

U.S. PATENT DOCUMENTS

5,883,810 A * 3/1999 Franklin G06Q 30/06 235/379
7,120,609 B1 * 10/2006 Kerkdijk G06Q 20/02 705/78

(Continued)

OTHER PUBLICATIONS

First Data, "Reducing PCI DSS Scope with the First Data TransArmor Solution", firstdata.com, 2010. (Year: 2010).*

Primary Examiner — Abdulmajeed Aziz
(74) *Attorney, Agent, or Firm* — Blank Rome LLP

(57) **ABSTRACT**

Processing a payment from a payer to a payee (operating a first computing system), by a second computing system, by receiving an electronically-generated payment transaction instruction (identifying the payer, specifying the amount of the payment, and specifying a communications link for the second computing system to obtain financial account information from the payer) from the first computing system, obtaining the financial account information from the payer via the specified communications link, generating an electronic data token representing the financial account information, outputting the electronic data token for transmittal to the first computing system (where the first computing system does not receive the financial account information and the second computing system does not provide the electronic data token to the payer), obtaining the amount from the payer using the financial account information, and forwarding at least a portion of the amount to the payee.

27 Claims, 15 Drawing Sheets

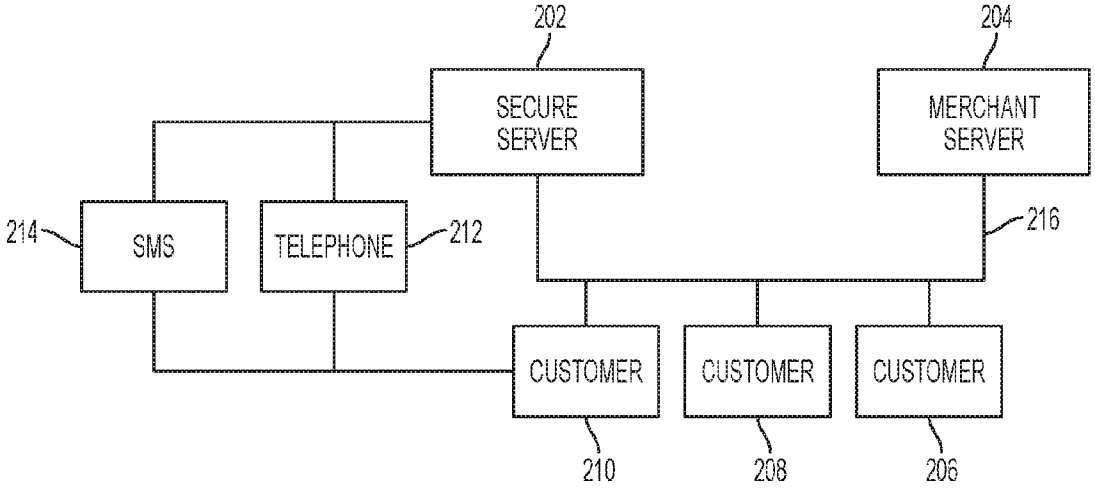

Related U.S. Application Data

continuation of application No. 13/679,545, filed on Nov. 16, 2012, now Pat. No. 9,576,279.

(60) Provisional application No. 61/655,482, filed on Jun. 5, 2012, provisional application No. 61/698,574, filed on Sep. 8, 2012.

(51) **Int. Cl.**

G06Q 20/40	(2012.01)
G06Q 10/107	(2023.01)
G06Q 20/30	(2012.01)
G06Q 10/00	(2023.01)

(52) **U.S. Cl.**

CPC ***G06Q 20/305*** (2013.01); ***G06Q 20/40*** (2013.01); ***G06Q 20/4014*** (2013.01); *G06Q 10/00* (2013.01)

(56) **References Cited**

U.S. PATENT DOCUMENTS

7,680,736 B2 * 3/2010 Jarman G06Q 20/202 705/41
7,801,825 B2 * 9/2010 Kranzley G06Q 20/3821 705/67
9,342,832 B2 * 5/2016 Basu G06Q 20/385
10,423,940 B2 * 9/2019 Pollin G06Q 10/107
2001/0056402 A1 * 12/2001 Ahuja G06Q 20/1085 705/43
2002/0087704 A1 * 7/2002 Chesnais H04L 69/329 709/228
2002/0107791 A1 * 8/2002 Nobrega G06Q 20/327 705/39
2002/0165821 A1 * 11/2002 Tree G06Q 20/04 705/39
2004/0098350 A1 * 5/2004 Labrou G06Q 20/12 705/64
2004/0143550 A1 * 7/2004 Creamer G06Q 20/105 705/41
2004/0148252 A1 * 7/2004 Fleishman G06Q 20/223 705/39
2005/0197962 A1 * 9/2005 Critchfield G06Q 50/26 705/53
2006/0235796 A1 10/2006 Johnson et al.
2006/0242058 A1 * 10/2006 Torto G06Q 20/02 705/44
2007/0011093 A1 * 1/2007 Tree G06Q 20/10 705/40
2007/0250920 A1 10/2007 Lindsay
2008/0083826 A1 * 4/2008 Henry G06Q 20/10 235/379
2009/0048953 A1 * 2/2009 Hazel G07F 7/1008 705/35
2009/0063353 A1 * 3/2009 Viidu G06Q 20/16 705/75
2009/0132351 A1 * 5/2009 Gibson G06Q 20/02 705/12
2009/0240594 A1 * 9/2009 Kerner G06Q 30/0601 705/26.1
2010/0235286 A1 * 9/2010 Moore G06Q 20/3821 705/26.1
2011/0029416 A1 * 2/2011 Greenspan G06Q 30/0611 705/30
2011/0029436 A1 * 2/2011 Norvell H04L 63/08 705/67
2011/0078244 A1 * 3/2011 Minter G06Q 30/02 709/204
2011/0161233 A1 * 6/2011 Tieken G06Q 20/04 705/76
2011/0184853 A1 * 7/2011 Mark G06Q 20/3221 705/39
2012/0005038 A1 * 1/2012 Soman G06Q 20/12 705/26.41
2012/0023567 A1 * 1/2012 Hammad G06Q 20/4016 726/9
2012/0030066 A1 * 2/2012 Stringfellow G06Q 20/204 705/26.41
2012/0078799 A1 * 3/2012 Jackson G06Q 20/12 705/67
2012/0136796 A1 * 5/2012 Hammad G06Q 20/385 705/67
2012/0259782 A1 * 10/2012 Hammad G06Q 20/3674 705/44
2013/0198080 A1 * 8/2013 Anderson G06Q 20/26 705/44
2014/0074695 A1 * 3/2014 Barkan G06Q 20/3674 705/39
2019/0362324 A1 * 11/2019 Pollin G06Q 20/10

* cited by examiner

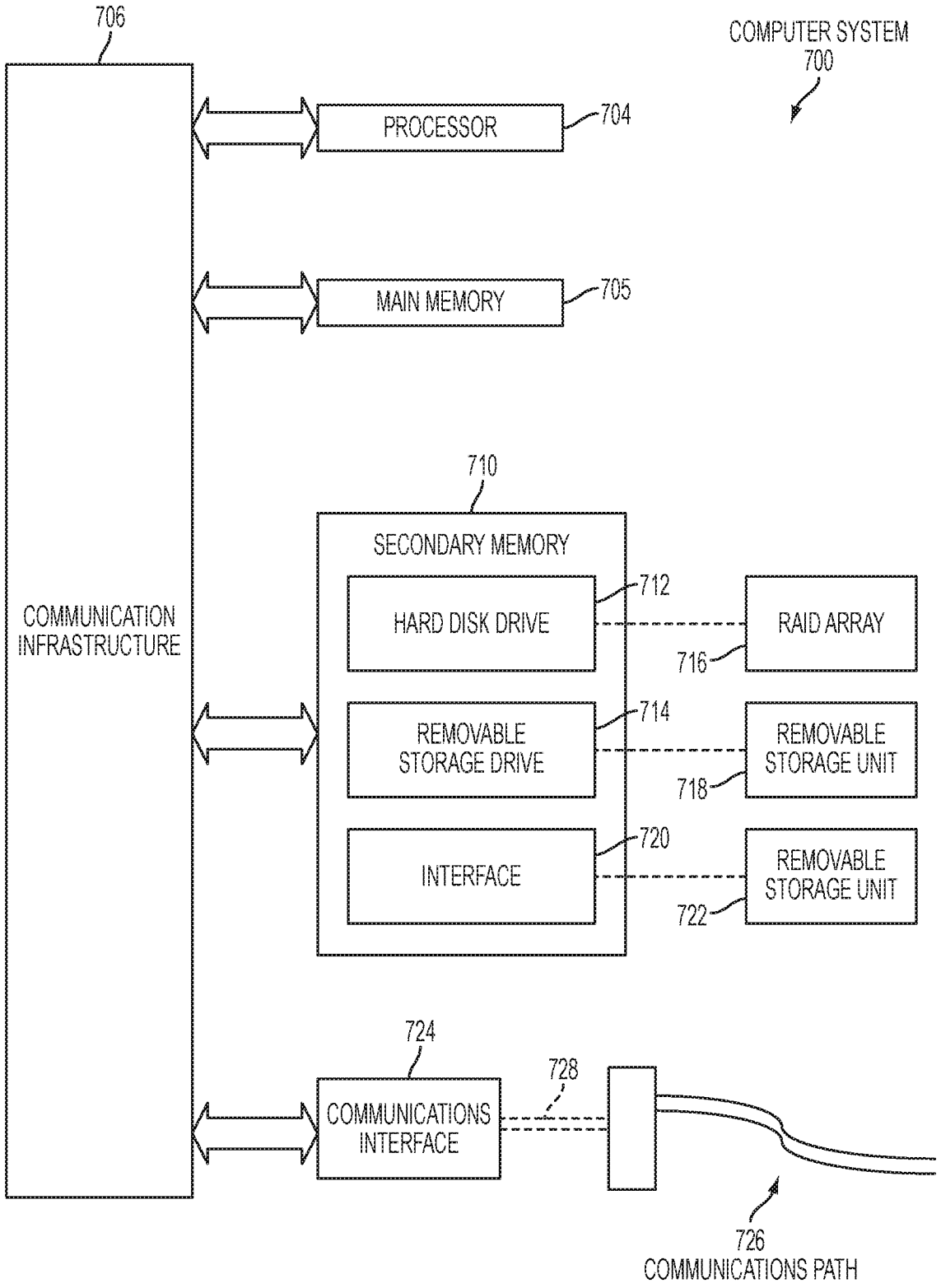
706
COMPUTER SYSTEM
700
PROCESSOR
704
MAIN MEMORY
705
710
SECONDARY MEMORY
COMMUNICATION INFRASTRUCTURE
HARD DISK DRIVE
712
RAID ARRAY
716
REMOVABLE STORAGE DRIVE
714
REMOVABLE STORAGE UNIT
718
INTERFACE
720
REMOVABLE STORAGE UNIT
722
724
COMMUNICATIONS INTERFACE
728
726
COMMUNICATIONS PATH

FIG. 1

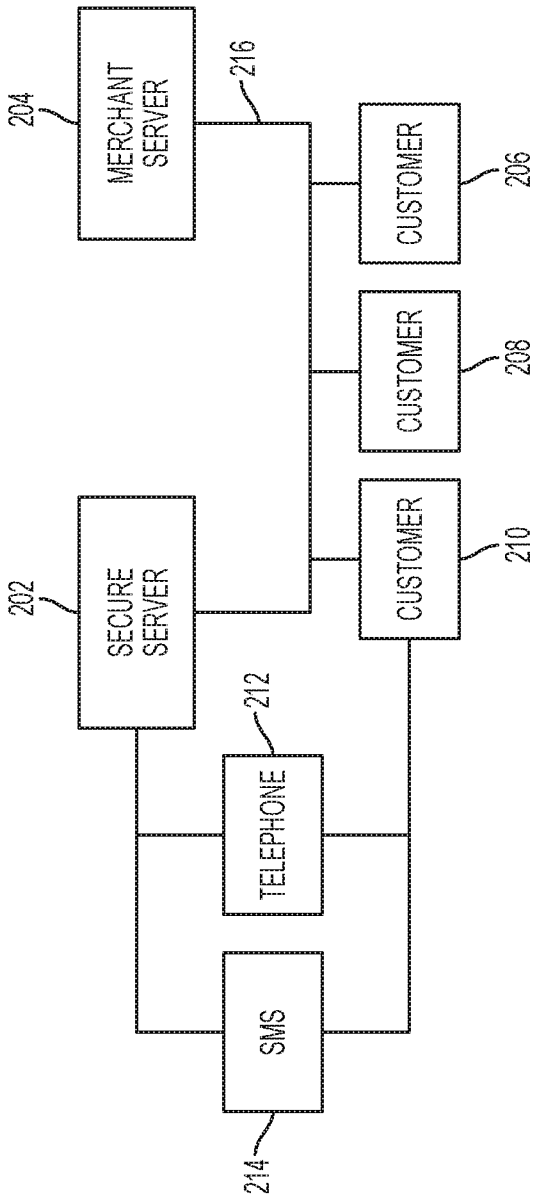
MERCHANT SERVER
204
216
SECURE SERVER
202
CUSTOMER
206
CUSTOMER
208
CUSTOMER
210
TELEPHONE
212
SMS
214

FIG. 2

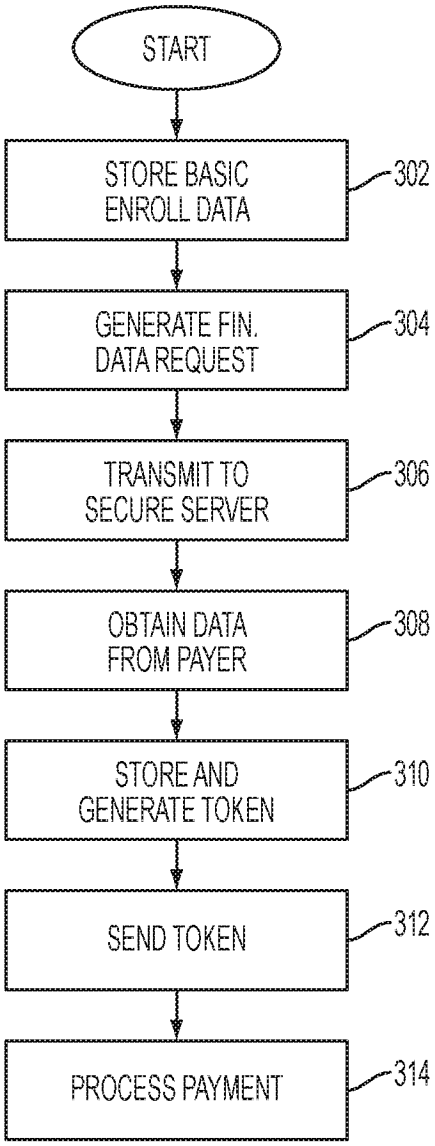
START
STORE BASIC ENROLL DATA
302
GENERATE FIN. DATA REQUEST
304
TRANSMIT TO SECURE SERVER
306
OBTAIN DATA FROM PAYER
308
STORE AND GENERATE TOKEN
310
SEND TOKEN
312
PROCESS PAYMENT
314

FIG. 3

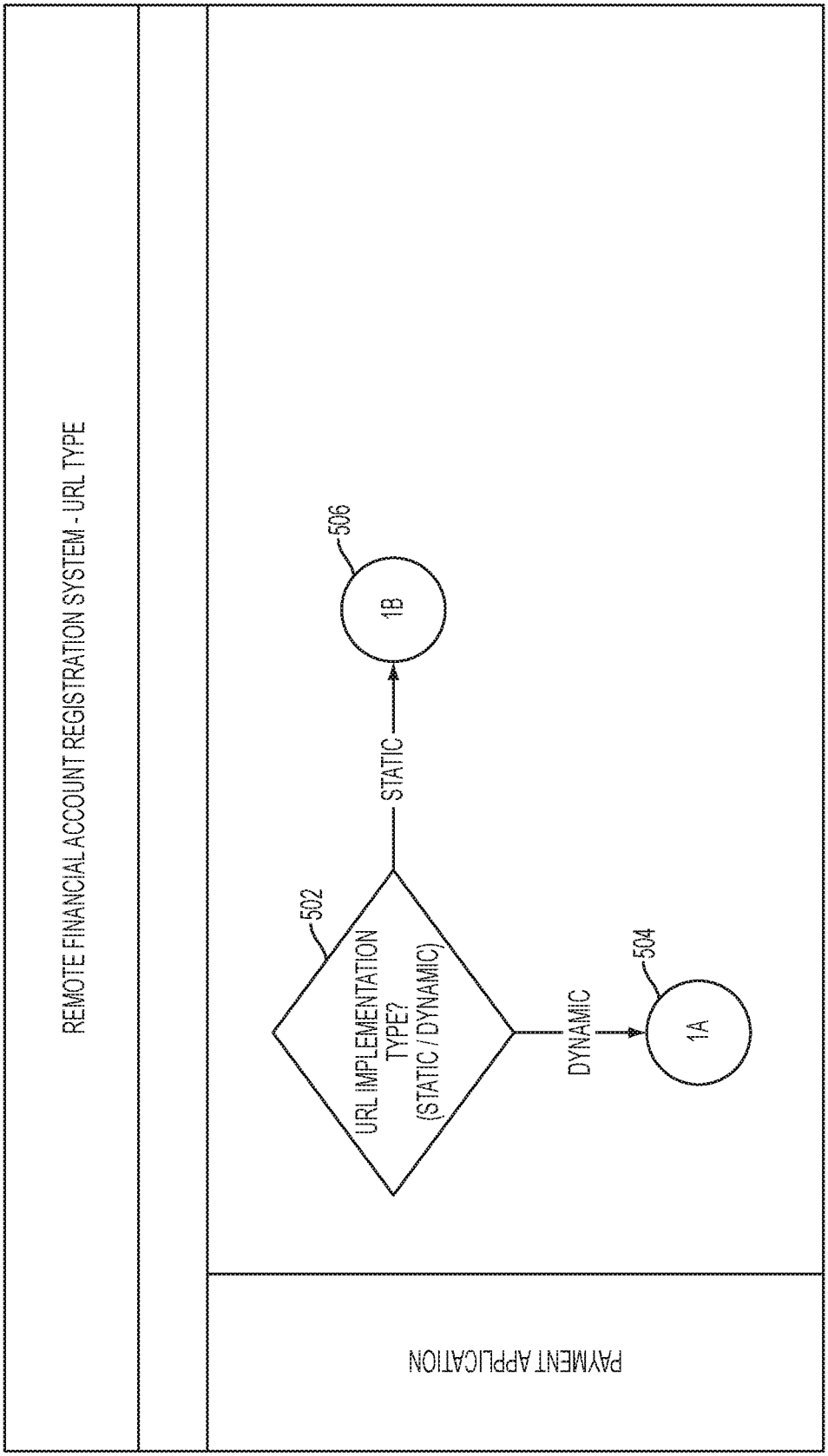
REMOTE FINANCIAL ACCOUNT REGISTRATION SYSTEM - URL TYPE
PAYMENT APPLICATION
502
URL IMPLEMENTATION TYPE? (STATIC / DYNAMIC)
STATIC
DYNAMIC
506
1B
504
1A

FIG. 4a

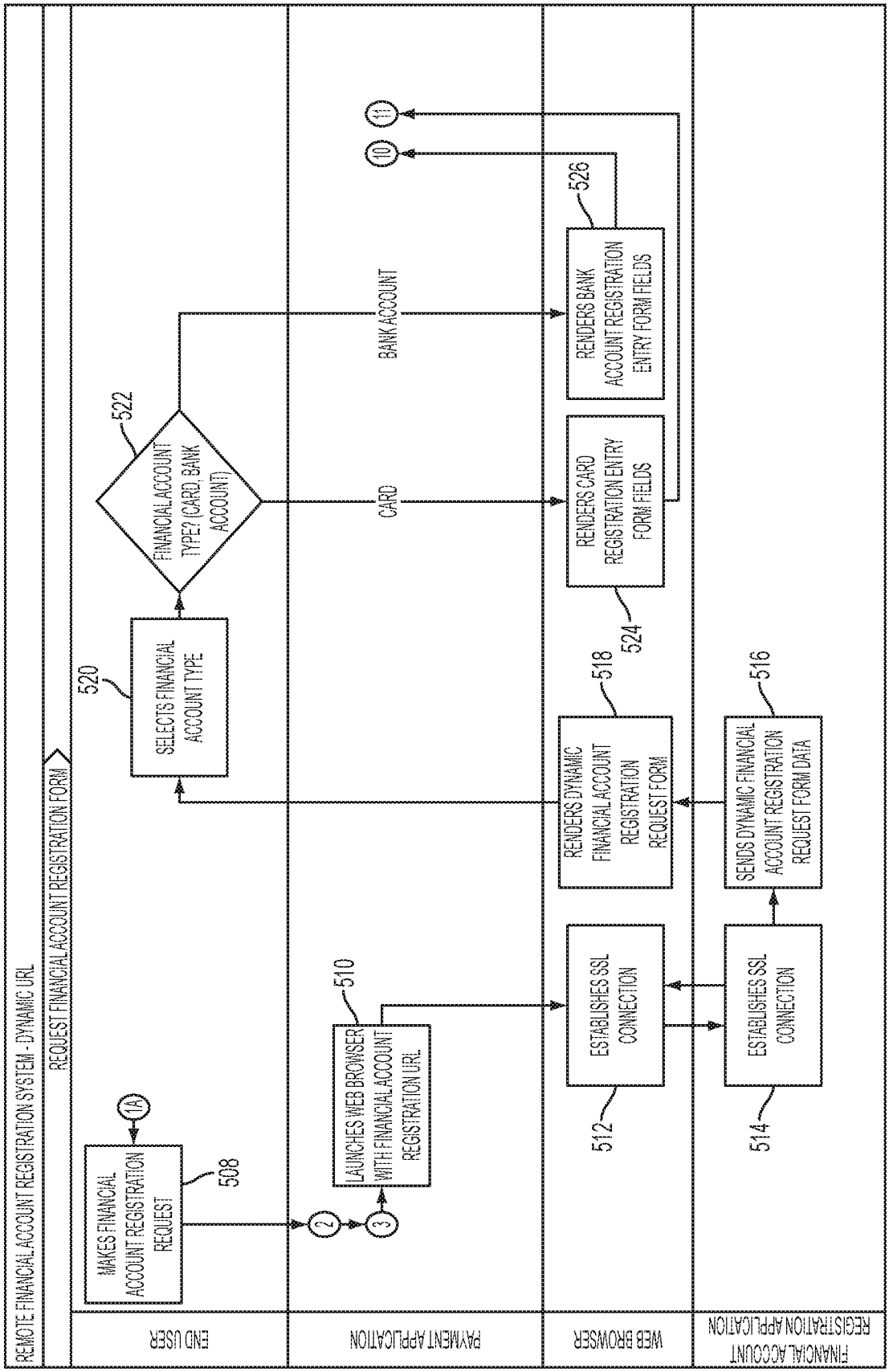
REMOTE FINANCIAL ACCOUNT REGISTRATION SYSTEM - DYNAMIC URL
REQUEST FINANCIAL ACCOUNT REGISTRATION FORM
END USER
PAYMENT APPLICATION
WEB BROWSER
FINANCIAL ACCOUNT REGISTRATION APPLICATION
1A
MAKES FINANCIAL ACCOUNT REGISTRATION REQUEST
508
2
3
LAUNCHES WEB BROWSER WITH FINANCIAL ACCOUNT REGISTRATION URL
510
SELECTS FINANCIAL ACCOUNT TYPE
520
FINANCIAL ACCOUNT TYPE? (CARD, BANK ACCOUNT)
522
CARD
BANK ACCOUNT
ESTABLISHES SSL CONNECTION
512
RENDERS DYNAMIC FINANCIAL ACCOUNT REGISTRATION REQUEST FORM
518
RENDERS CARD REGISTRATION ENTRY FORM FIELDS
524
RENDERS BANK ACCOUNT REGISTRATION ENTRY FORM FIELDS
526
10
11
ESTABLISHES SSL CONNECTION
514
SENDS DYNAMIC FINANCIAL ACCOUNT REGISTRATION REQUEST FORM DATA
516

FIG. 4b

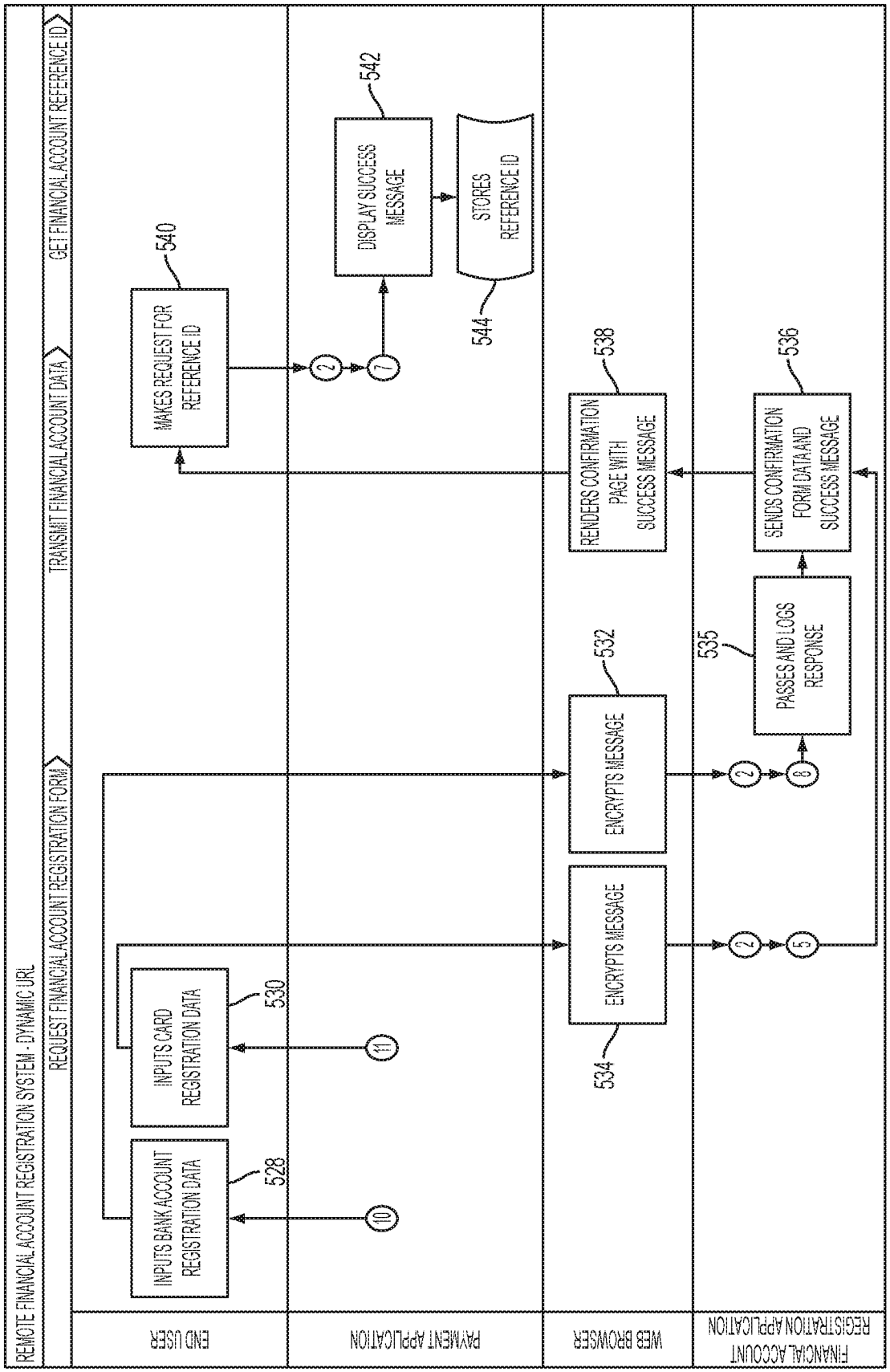
REMOTE FINANCIAL ACCOUNT REGISTRATION SYSTEM - DYNAMIC URL
REQUEST FINANCIAL ACCOUNT REGISTRATION FORM
TRANSMIT FINANCIAL ACCOUNT DATA
GET FINANCIAL ACCOUNT REFERENCE ID
END USER
PAYMENT APPLICATION
WEB BROWSER
FINANCIAL ACCOUNT REGISTRATION APPLICATION
INPUTS BANK ACCOUNT REGISTRATION DATA
528
INPUTS CARD REGISTRATION DATA
530
10
11
ENCRYPTS MESSAGE
534
ENCRYPTS MESSAGE
532
2
5
2
8
PASSES AND LOGS RESPONSE
535
RENDERS CONFIRMATION PAGE WITH SUCCESS MESSAGE
538
SENDS CONFIRMATION FORM DATA AND SUCCESS MESSAGE
536
MAKES REQUEST FOR REFERENCE ID
540
2
7
DISPLAY SUCCESS MESSAGE
542
STORES REFERENCE ID
544

FIG. 4c

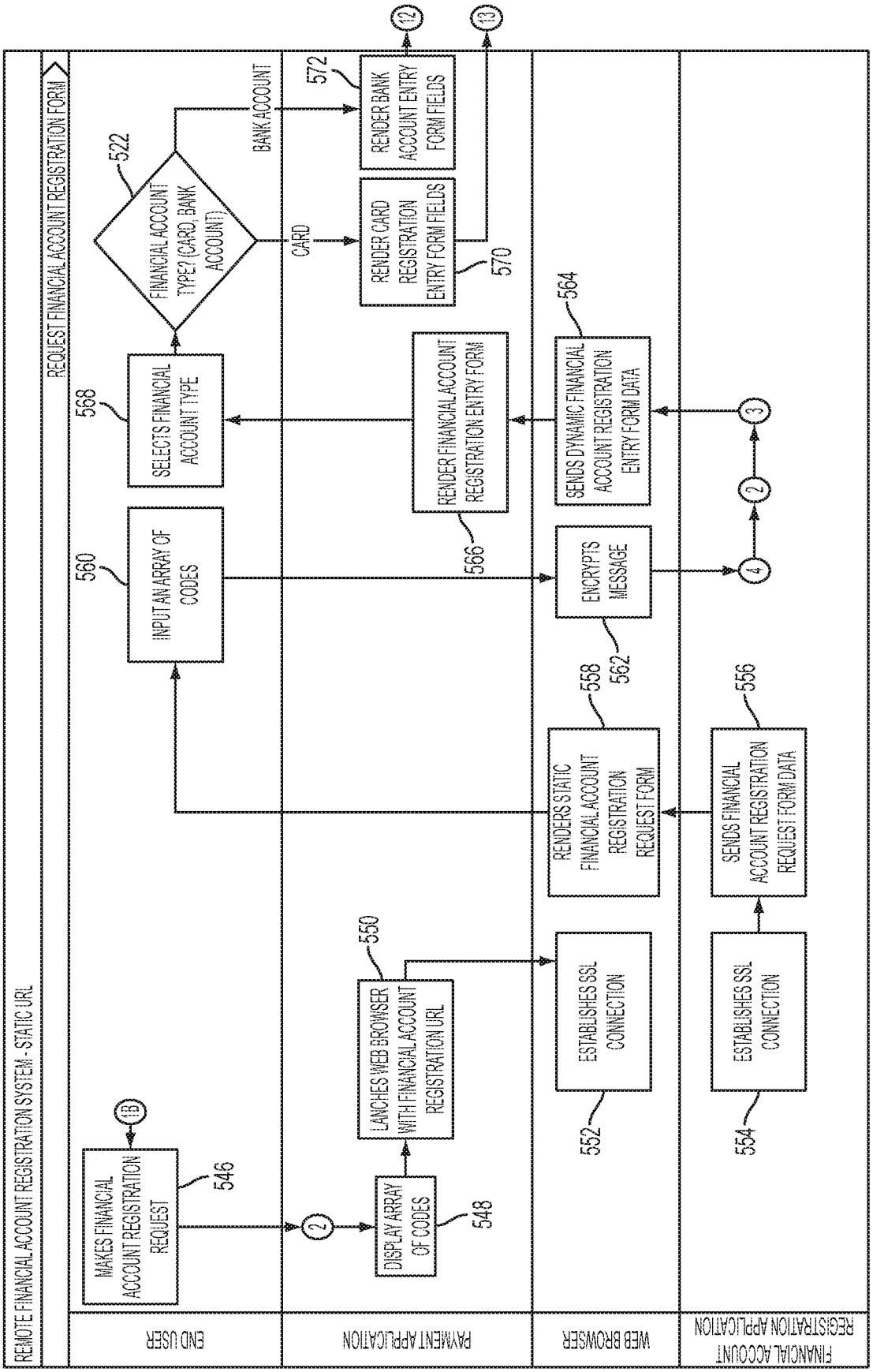
REMOTE FINANCIAL ACCOUNT REGISTRATION SYSTEM - STATIC URL
REQUEST FINANCIAL ACCOUNT REGISTRATION FORM
END USER
PAYMENT APPLICATION
WEB BROWSER
FINANCIAL ACCOUNT REGISTRATION APPLICATION
MAKES FINANCIAL ACCOUNT REGISTRATION REQUEST
546
1B
2
DISPLAY ARRAY OF CODES
548
LANCHES WEB BROWSER WITH FINANCIAL ACCOUNT REGISTRATION URL
550
ESTABLISHES SSL CONNECTION
552
RENDERS STATIC FINANCIAL ACCOUNT REGISTRATION REQUEST FORM
558
562
ESTABLISHES SSL CONNECTION
554
SENDS FINANCIAL ACCOUNT REGISTRATION REQUEST FORM DATA
556
INPUT AN ARRAY OF CODES
560
SELECTS FINANCIAL ACCOUNT TYPE
568
FINANCIAL ACCOUNT TYPE? (CARD, BANK ACCOUNT)
522
BANK ACCOUNT
CARD
RENDER FINANCIAL ACCOUNT REGISTRATION ENTRY FORM
566
RENDER CARD REGISTRATION ENTRY FORM FIELDS
570
RENDER BANK ACCOUNT ENTRY FORM FIELDS
572
12
13
ENCRYPTS MESSAGE
4
2
SENDS DYNAMIC FINANCIAL ACCOUNT REGISTRATION ENTRY FORM DATA
564
3

FIG. 4d

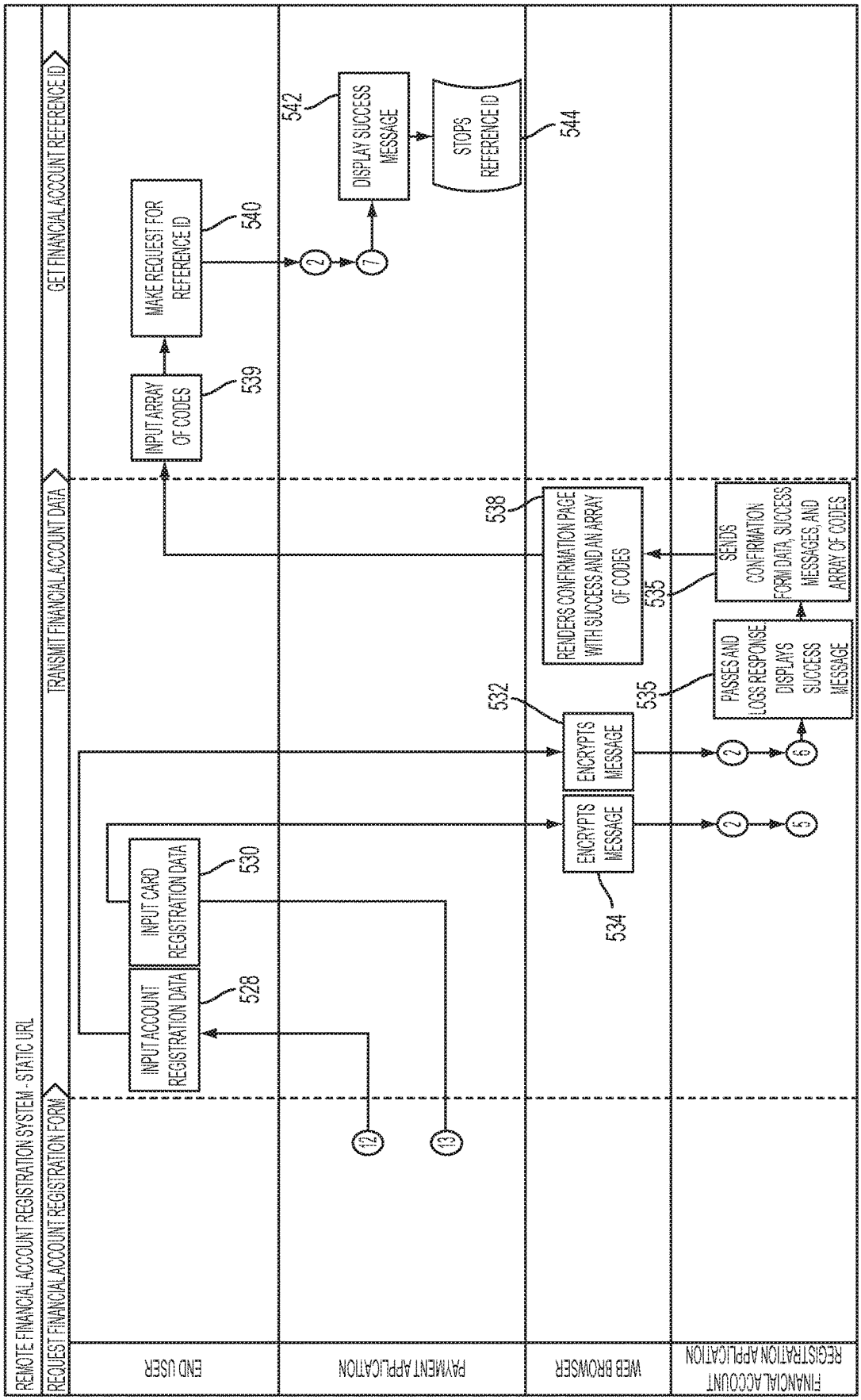
REMOTE FINANCIAL ACCOUNT REGISTRATION SYSTEM - STATIC URL
REQUEST FINANCIAL ACCOUNT REGISTRATION FORM
TRANSMIT FINANCIAL ACCOUNT DATA
GET FINANCIAL ACCOUNT REFERENCE ID
END USER
PAYMENT APPLICATION
WEB BROWSER
FINANCIAL ACCOUNT REGISTRATION APPLICATION
INPUT ACCOUNT REGISTRATION DATA
528
INPUT CARD REGISTRATION DATA
530
INPUT ARRAY OF CODES
539
MAKE REQUEST FOR REFERENCE ID
540
DISPLAY SUCCESS MESSAGE
542
STORES REFERENCE ID
544
RENDERS CONFIRMATION PAGE WITH SUCCESS AND AN ARRAY OF CODES
538
ENCRYPTS MESSAGE
534
ENCRYPTS MESSAGE
532
SENDS CONFIRMATION FORM DATA, SUCCESS MESSAGES, AND ARRAY OF CODES
535
PASSES AND LOGS RESPONSE DISPLAYS SUCCESS MESSAGE
535
12
13
2
7
2
5
2
6

FIG. 4e

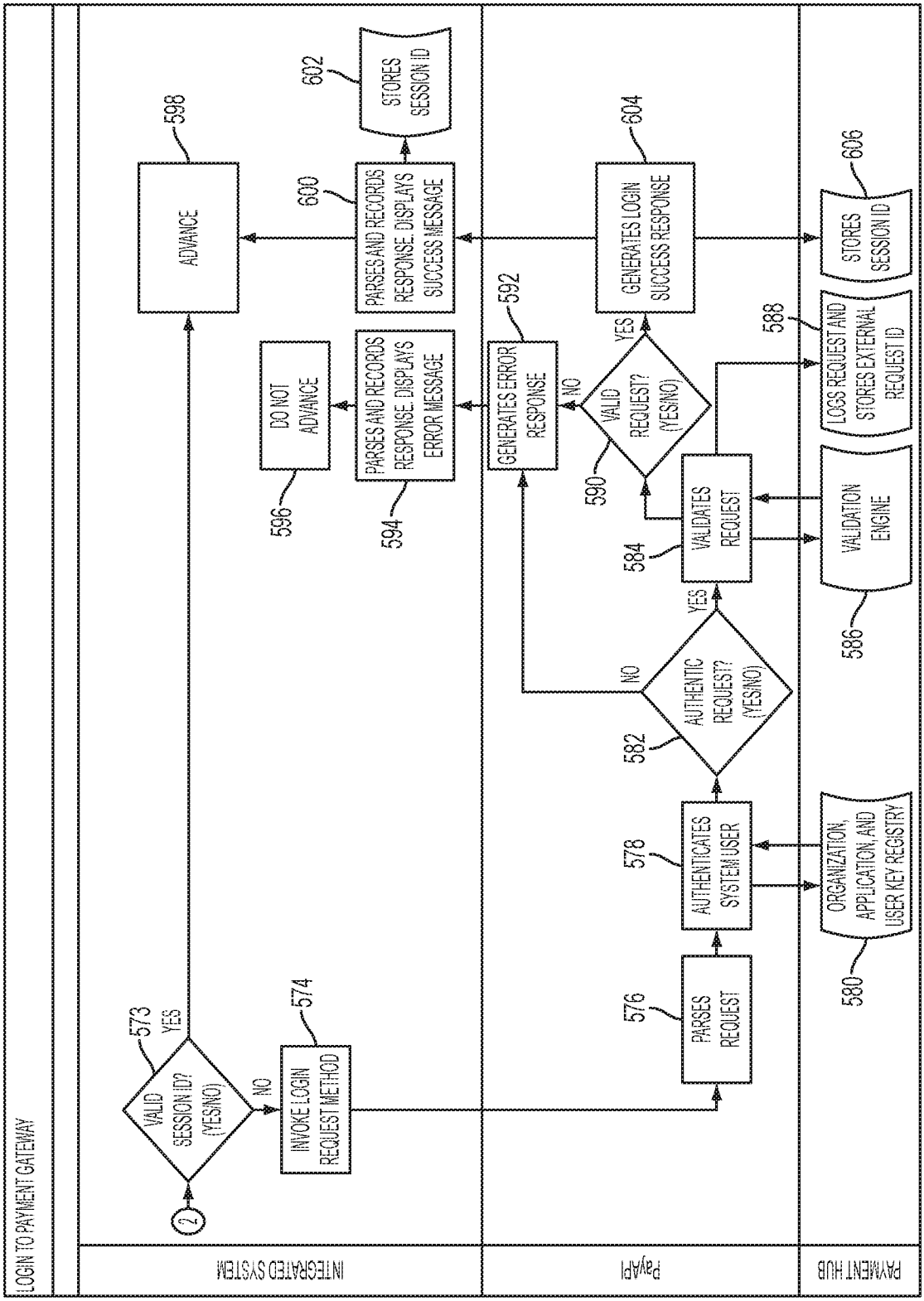
LOGIN TO PAYMENT GATEWAY
INTEGRATED SYSTEM
PayAPI
PAYMENT HUB
2
573
VALID SESSION ID? (YES/NO)
YES
NO
574
INVOKE LOGIN REQUEST METHOD
598
ADVANCE
596
DO NOT ADVANCE
594
PARSES AND RECORDS RESPONSE. DISPLAYS ERROR MESSAGE
600
PARSES AND RECORDS RESPONSE. DISPLAYS SUCCESS MESSAGE
602
STORES SESSION ID
576
PARSES REQUEST
578
AUTHENTICATES SYSTEM USER
580
ORGANIZATION, APPLICATION, AND USER KEY REGISTRY
582
AUTHENTIC REQUEST? (YES/NO)
NO
YES
584
VALIDATES REQUEST
586
VALIDATION ENGINE
588
LOGS REQUEST AND STORES EXTERNAL REQUEST ID
590
VALID REQUEST? (YES/NO)
YES
NO
592
GENERATES ERROR RESPONSE
604
GENERATES LOGIN SUCCESS RESPONSE
606
STORES SESSION ID

FIG. 4f

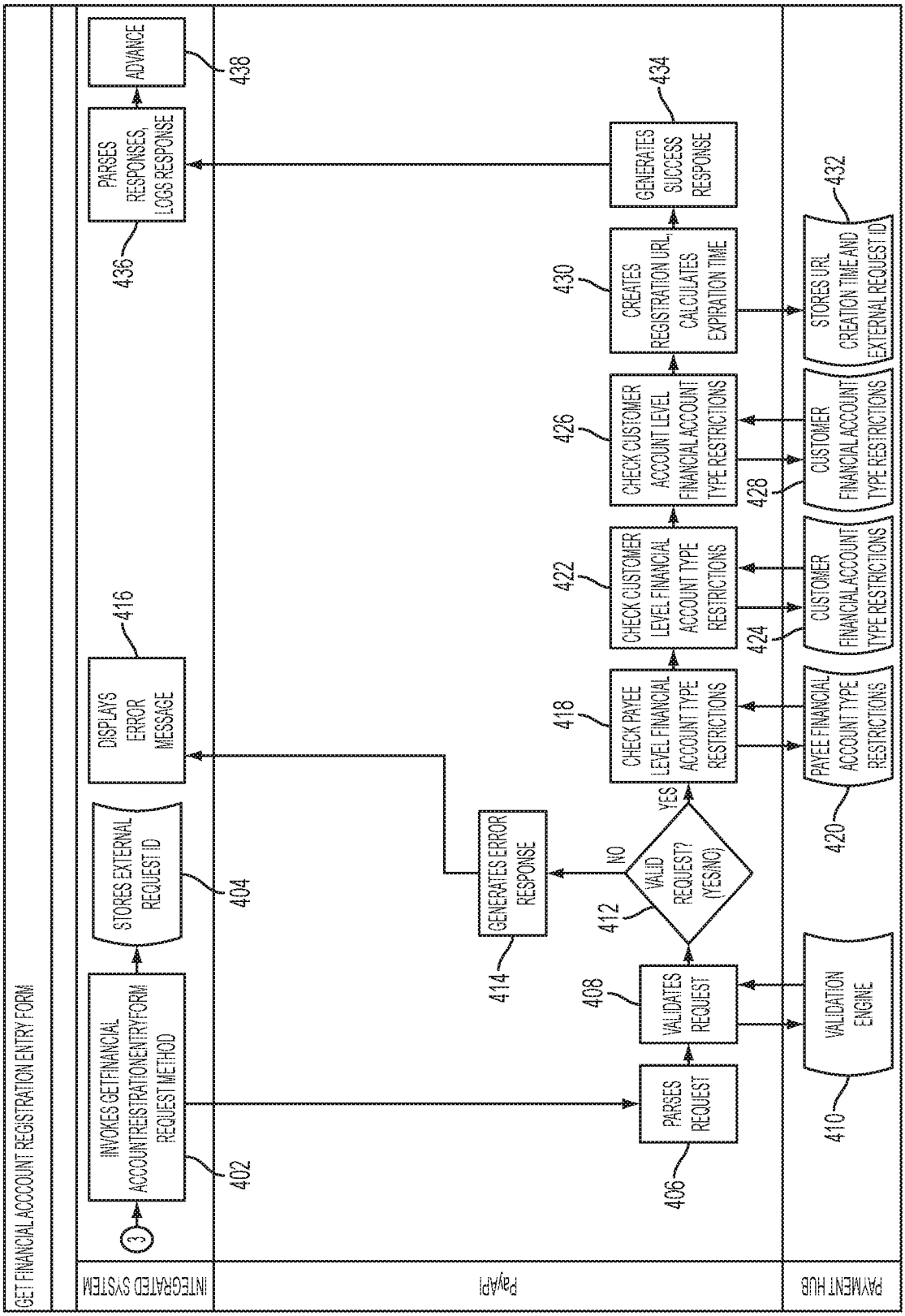
GET FINANCIAL ACCOUNT REGISTRATION ENTRY FORM
INTEGRATED SYSTEM
PayAPI
PAYMENT HUB
3
INVOKES GETFINANCIAL ACCOUNTREGISTRATIONENTRYFORM REQUEST METHOD
402
STORES EXTERNAL REQUEST ID
404
DISPLAYS ERROR MESSAGE
416
PARSES RESPONSES, LOGS RESPONSE
436
ADVANCE
438
PARSES REQUEST
406
VALIDATES REQUEST
408
VALID REQUEST? (YES/NO)
412
NO
YES
GENERATES ERROR RESPONSE
414
CHECK PAYEE LEVEL FINANCIAL ACCOUNT TYPE RESTRICTIONS
418
CHECK CUSTOMER LEVEL FINANCIAL ACCOUNT TYPE RESTRICTIONS
422
CHECK CUSTOMER ACCOUNT LEVEL FINANCIAL ACCOUNT TYPE RESTRICTIONS
426
CREATES REGISTRATION URL, CALCULATES EXPIRATION TIME
430
GENERATES SUCCESS RESPONSE
434
VALIDATION ENGINE
410
PAYEE FINANCIAL ACCOUNT TYPE RESTRICTIONS
420
CUSTOMER FINANCIAL ACCOUNT TYPE RESTRICTIONS
424
CUSTOMER FINANCIAL ACCOUNT TYPE RESTRICTIONS
428
STORES URL CREATION TIME AND EXTERNAL REQUEST ID
432

FIG. 4g

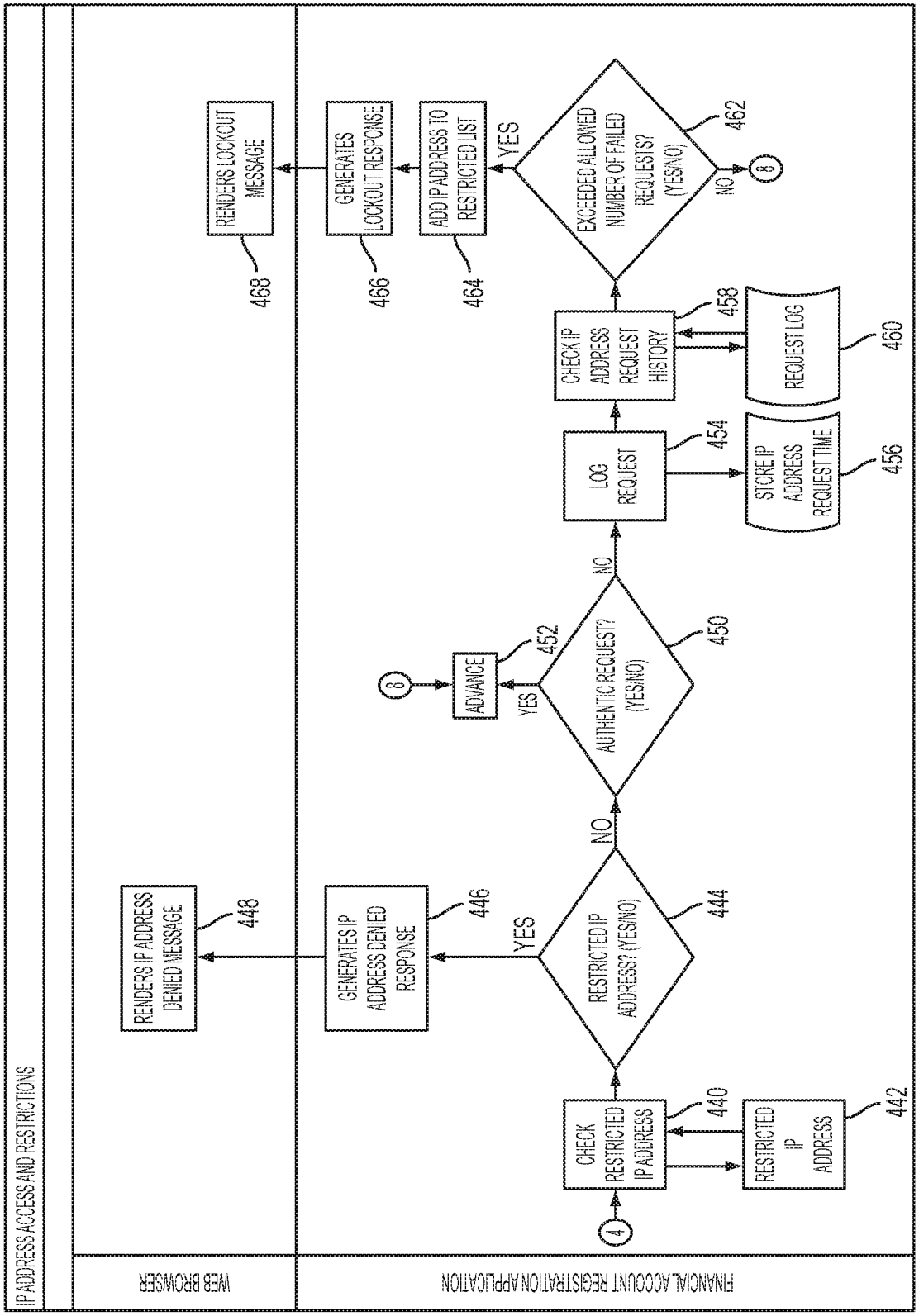
IP ADDRESS ACCESS AND RESTRICTIONS
WEB BROWSER
FINANCIAL ACCOUNT REGISTRATION APPLICATION
4
CHECK RESTRICTED IP ADDRESS
440
RESTRICTED IP ADDRESS
442
RESTRICTED IP ADDRESS? (YES/NO)
444
YES
NO
GENERATES IP ADDRESS DENIED RESPONSE
446
RENDERS IP ADDRESS DENIED MESSAGE
448
AUTHENTIC REQUEST? (YES/NO)
450
YES
ADVANCE
452
8
NO
LOG REQUEST
454
STORE IP ADDRESS REQUEST TIME
456
CHECK IP ADDRESS REQUEST HISTORY
458
REQUEST LOG
460
EXCEEDED ALLOWED NUMBER OF FAILED REQUESTS? (YES/NO)
462
YES
NO
8
ADD IP ADDRESS TO RESTRICTED LIST
464
GENERATES LOCKOUT RESPONSE
466
RENDERS LOCKOUT MESSAGE
468

FIG. 4h

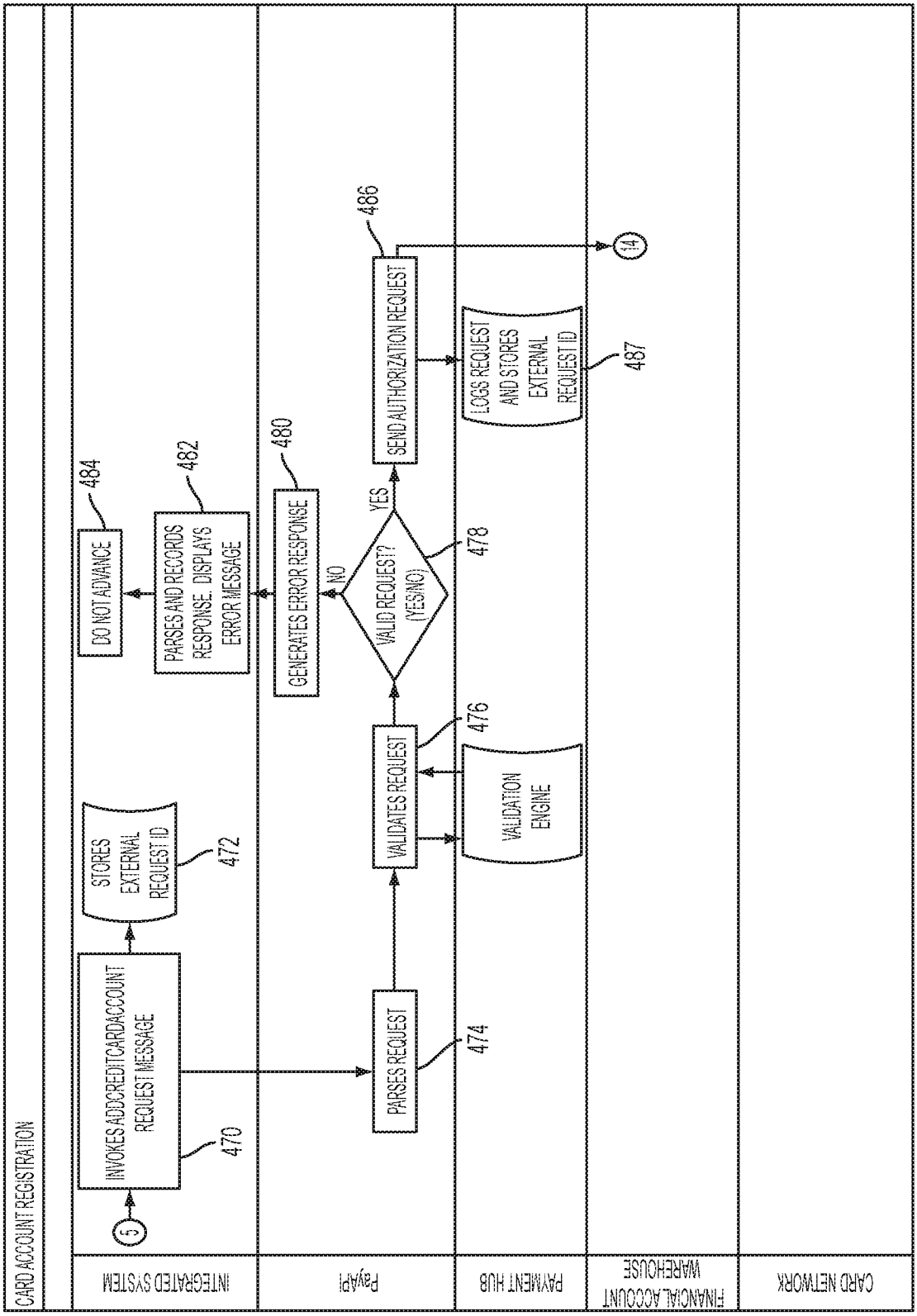
CARD ACCOUNT REGISTRATION
INTEGRATED SYSTEM
PayAPI
PAYMENT HUB
FINANCIAL ACCOUNT WAREHOUSE
CARD NETWORK
5
INVOKES ADDCREDITCARDACCOUNT REQUEST MESSAGE
470
STORES EXTERNAL REQUEST ID
472
PARSES REQUEST
474
VALIDATES REQUEST
476
VALIDATION ENGINE
VALID REQUEST? (YES/NO)
478
NO
YES
GENERATES ERROR RESPONSE
480
PARSES AND RECORDS RESPONSE. DISPLAYS ERROR MESSAGE
482
DO NOT ADVANCE
484
SEND AUTHORIZATION REQUEST
486
LOGS REQUEST AND STORES EXTERNAL REQUEST ID
487
14

FIG. 4i

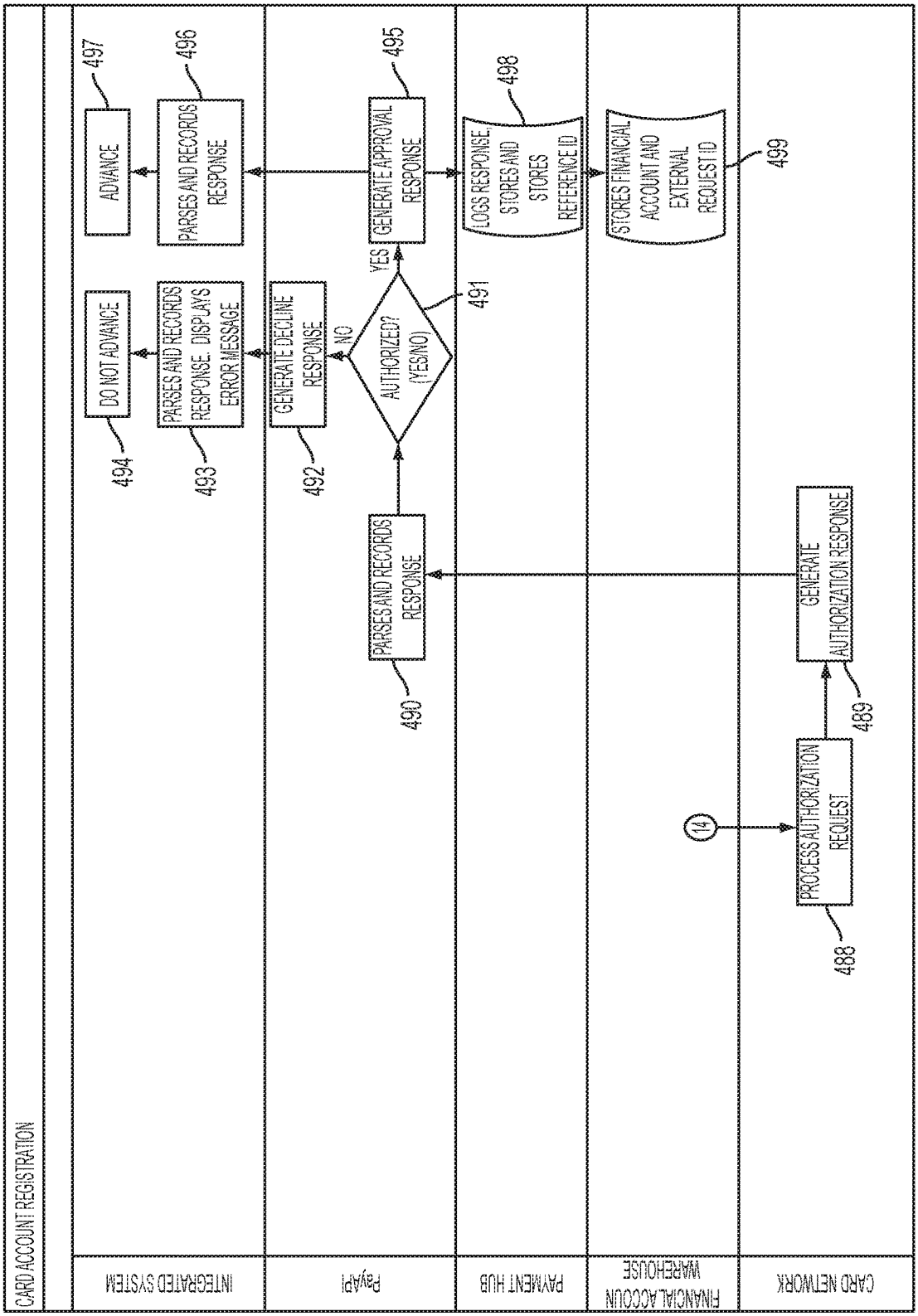
CARD ACCOUNT REGISTRATION
INTEGRATED SYSTEM
PayAPI
PAYMENT HUB
FINANCIAL ACCOUN WAREHOUSE
CARD NETWORK
ADVANCE
497
PARSES AND RECORDS RESPONSE
496
GENERATE APPROVAL RESPONSE
495
LOGS RESPONSE, STORES AND STORES REFERENCE ID
498
STORES FINANCIAL ACCOUNT AND EXTERNAL REQUEST ID
499
DO NOT ADVANCE
494
PARSES AND RECORDS RESPONSE. DISPLAYS ERROR MESSAGE
493
GENERATE DECLINE RESPONSE
492
YES
NO
AUTHORIZED? (YES/NO)
491
PARSES AND RECORDS RESPONSE
490
GENERATE AUTHORIZATION RESPONSE
489
14
PROCESS AUTHORIZATION REQUEST
488

FIG. 4j

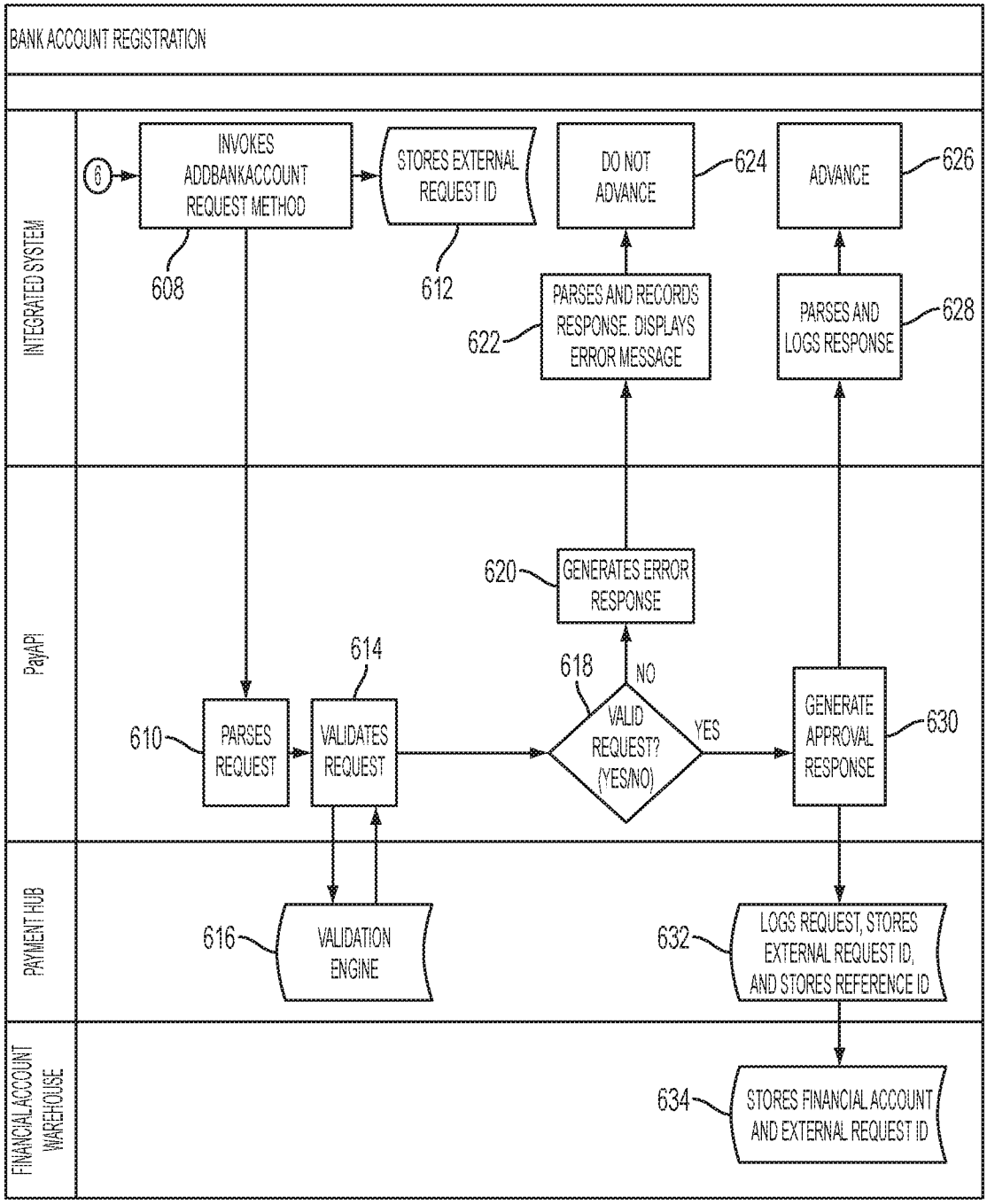
BANK ACCOUNT REGISTRATION
INTEGRATED SYSTEM
PayAPI
PAYMENT HUB
FINANCIAL ACCOUNT WAREHOUSE
6
INVOKES ADDBANKACCOUNT REQUEST METHOD
608
STORES EXTERNAL REQUEST ID
612
DO NOT ADVANCE
624
ADVANCE
626
PARSES AND RECORDS RESPONSE. DISPLAYS ERROR MESSAGE
622
PARSES AND LOGS RESPONSE
628
GENERATES ERROR RESPONSE
620
PARSES REQUEST
610
VALIDATES REQUEST
614
VALID REQUEST? (YES/NO)
618
NO
YES
GENERATE APPROVAL RESPONSE
630
VALIDATION ENGINE
616
LOGS REQUEST, STORES EXTERNAL REQUEST ID, AND STORES REFERENCE ID
632
STORES FINANCIAL ACCOUNT AND EXTERNAL REQUEST ID
634

FIG. 4k

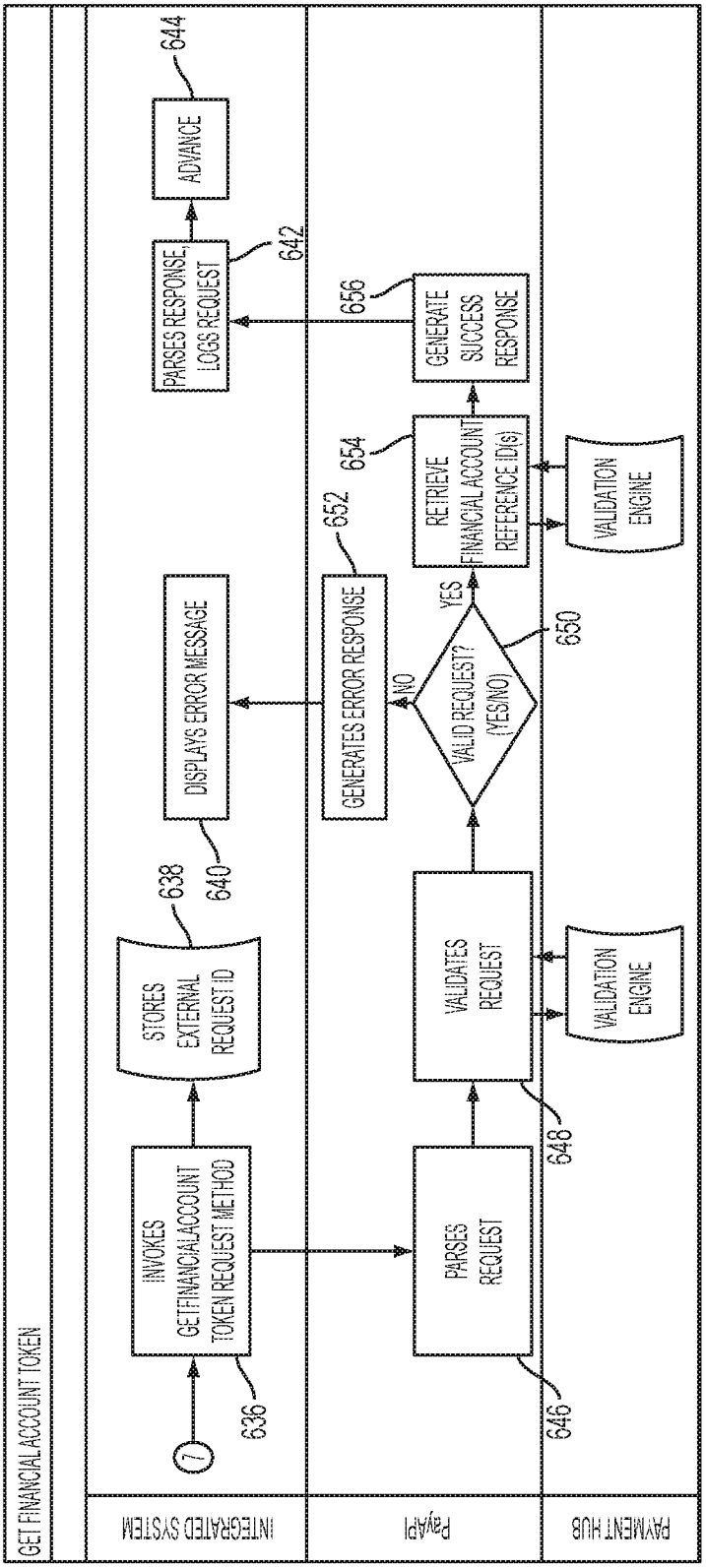
GET FINANCIAL ACCOUNT TOKEN
INTEGRATED SYSTEM
PayAPI
PAYMENT HUB
7
INVOKES GETFINANCIALACCOUNT TOKEN REQUEST METHOD
636
STORES EXTERNAL REQUEST ID
638
DISPLAYS ERROR MESSAGE
640
PARSES RESPONSE, LOGS REQUEST
642
ADVANCE
644
PARSES REQUEST
646
VALIDATES REQUEST
648
VALIDATION ENGINE
VALID REQUEST? (YES/NO)
650
NO
YES
GENERATES ERROR RESPONSE
652
RETRIEVE FINANCIAL ACCOUNT REFERENCE ID(s)
654
VALIDATION ENGINE
GENERATE SUCCESS RESPONSE
656

FIG. 4I

ENROLLING A PAYER BY A MERCHANT SERVER OPERATED BY OR FOR THE BENEFIT OF A PAYEE AND PROCESSING A PAYMENT FROM THE PAYER BY A SECURE SERVER

This application is a continuation of co-pending U.S. application Ser. No. 15/408,185, filed Jan. 17, 2017, which is a continuation of U.S. application Ser. No. 13/679,545, now U.S. Pat. No. 9,576,279, filed Nov. 16, 2012, which claims the benefit of U.S. Prov. Pat. Appl. No. 61/655,482, filed Jun. 5, 2012, and U.S. Prov. Pat. Appl. No. 61/698,574, filed Sep. 8, 2012. The aforementioned patent applications are hereby incorporated by reference in their entirety.

FIELD OF THE INVENTION

The present invention relates broadly to systems and methods for obtaining and using account information to process financial payments.

BACKGROUND

Fraud in credit card and other financial transactions is a major problem, and considerable resources are devoted to securing credit card and other account information provided to merchants by payers. A single breach of security incident can compromise millions of credit card accounts, and such breaches are reported on a regular basis.

The Payment Card Industry Data Security Standard (PCI DSS) is an information security standard for organizations that handle cardholder information for the major debit, credit, prepaid, e-purse, ATM, and POS cards.

Defined by the Payment Card Industry Security Standards Council, the standard was created to increase controls around cardholder data to reduce credit card fraud. Annual PCI compliance audits by an external Qualified Security Assessor (QSA) are required for organizations handling large volumes of transactions. The security and organizational measures required to comply with the PCI standards, and the cost of the annual audits, are borne by the individual organization. Underlying software applications may require substantial modifications to achieve compliance, and significant changes in organizational structure and operating procedures may also be required. Thus, the time, effort, and cost required for merchants and processors to obtain PCI certification to receive and use credit card data are substantial.

In one approach to managing these costs, credit card processing organizations have used tokenization to provide a link to credit card data for purposes of storage and retrieval. Tokenization is the process of replacing some piece of sensitive data with a value that is not considered sensitive outside the environment where it is stored and used. The token is a symbolic representation of a financial instrument or instruction that is only meaningful to participants in the processing cycle, and safeguards the permissible use of and access to the financial instrument to authorized users. In the payments industry, tokenization has become a popular means of bolstering the security of electronic transactions while minimizing the complexity of compliance with industry standards and best practices.

In the PCI context, tokens are used to reference cardholder data that is stored in a separate database, application or off-site secure facility that is PCI compliant to the appropriate level. Therefore, the token, which is non-sensitive data, can be stored and used in a wide range of systems

in the organization, without bringing those systems within the scope of a higher-level PCI audit and more stringent compliance requirements.

However, there are limits in functionality of existing tokenization methods. There is a need for improvement in conventional approaches to obtaining and using account information to process financial payments.

SUMMARY OF THE INVENTION

It is to be understood that both the following summary and the detailed description are exemplary and explanatory and are intended to provide further explanation of the invention as claimed. Neither the summary nor the description that follows is intended to define or limit the scope of the invention to the particular features mentioned in the summary or in the description.

In an example embodiment, an authenticated customer (payer) enrollment session is established, and a last stage of the enrollment session is completed via a communications link such as a telephone or Internet link. The enrollment session is initiated, for example, by a merchant or collector who has obtained at least an initial identification of the customer (also sometimes referred to as the payer). In an embodiment, an initial portion of the enrollment session is completed on the merchant's server, or a third-party server providing services to the merchant, with data entered by a customer service agent who receives information over a telephone, by a customer over a network such as the Internet, or using an initial data file received from another source, such as a file listing customer identification information for debt collection purposes. A second portion of the enrollment session is then completed on a secure server that may be different from the merchant's server. In a preferred embodiment, financial account information used to make one or more payments is submitted to the secure server while other less sensitive data elements such as the customer's name and address are submitted to the merchant's regular server. For convenience the server that stores the sensitive financial account information will be referred to herein as the "secure" server, but this naming convention should not be interpreted to suggest that the merchant's regular server cannot have security features or be highly secure in its own right. In some embodiments, the merchant's server and secure server may operate in the same location or may be the same hardware using a separated volume or partition, or memory section. However, in other embodiments particular advantages are realized through logical and/or physical separation of the merchant's server and the secure server.

The secure server, in a preferred embodiment, stores the financial account information received from the customer (either in the secure server or in a separate secure storage location) and provides a token to the merchant's server. Financial account information may include, for example, credit card numbers and security codes, bank routing and account numbers, or other financial account identifiers. While certain advantages can be realized by storing financial account information on the secure server, storage of data on the secure server is not limited to such information; the secure server may receive and store information other than financial account information, to the extent the merchant wishes to store such additional information on the secure server rather than on the merchant's server. The token is an index to the stored financial account information for that customer that is stored by the merchant (or a server or service controlled by the merchant or merchant's agent) in

connection with the customer record and is used to identify the customer account to be debited to process a payment authorized by the customer.

To process a payment from the customer, the merchant submits information specifying the amount of the payment to the secure server. The operator of the secure server then processes the payment using the financial account pointed to by the token and makes the proceeds available to the merchant. By retaining the token corresponding to the customer account to be debited, the merchant retains control of the customer's enrollment information and the ability to process payments whenever authorized (using financial account information provided by the customer) but does not hold the underlying financial account information or have security responsibility for that information.

BRIEF DESCRIPTION OF THE DRAWINGS

The accompanying drawings, which are incorporated herein and form a part of the specification, illustrate various exemplary embodiments of the present invention and, together with the description, further serve to explain various principles and to enable a person skilled in the pertinent art to make and use the invention.

FIG. **1** is a block schematic diagram of an example computing system that can be used to implement functions described herein;

FIG. **2** is a block diagram illustrating connections of servers and systems in an example embodiment;

FIG. **3** is a flow chart showing a method of registering customer financial information and processing payments in an example embodiment;

FIGS. **4***a* through **4***l* together comprise a flow chart showing a further example embodiment of the process disclosed herein.

DETAILED DESCRIPTION OF THE PREFERRED EMBODIMENTS

The present invention will be described in terms of one or more examples, with reference to the accompanying drawings.

The present invention will also be explained in terms of exemplary embodiments. This specification discloses one or more embodiments that incorporate the features of this invention. The disclosure herein will provide examples of embodiments, including examples of data analysis from which those skilled in the art will appreciate various novel approaches and features developed by the inventors. These various novel approaches and features, as they may appear herein, may be used individually, or in combination with each other as desired.

In particular, the embodiment(s) described, and references in the specification to "one embodiment," "an embodiment," "an example embodiment," etc., indicate that the embodiment(s) described may include a particular feature, structure, or characteristic, but every embodiment may not necessarily include the particular feature, structure, or characteristic. Moreover, such phrases are not necessarily referring to the same embodiment. Further, when a particular feature, structure, or characteristic is described in connection with an embodiment, persons skilled in the art may implement such feature, structure, or characteristic in connection with other embodiments whether or not explicitly described.

Embodiments of the invention may be implemented in hardware, firmware, software, cloud computing, or any combination thereof. Embodiments of the invention may also be implemented as instructions stored on a machine-readable medium, which may be read and executed by one or more processors. A machine-readable medium may include any mechanism for storing or transmitting information in a form readable by a machine (e.g. a computing device). For example, a machine-readable medium may include read only memory (ROM); random access memory (RAM); hardware memory in handheld computers, PDAs, mobile telephones, and other portable devices; magnetic disk storage media; optical storage media; thumb drives and other flash memory devices; electrical, optical, acoustical, or other forms of propagated signals (e.g. carrier waves, infrared signals, digital signals, analog signals, etc.), Internet cloud storage, and others. Further, firmware, software, routines, instructions, may be described herein as performing certain actions. However, it should be appreciated that such descriptions are merely for convenience and that such actions in fact result from computing devices, processors, controllers or other devices executing the firmware, software, routines, instructions, etc.

FIG. **1** is a block schematic diagram of an example embodiment of a computing system that can be used to perform the functions disclosed herein in both server and end user applications. The example embodiment shows a general-purpose computer system **700**, such as a PC system. In particular, the methods disclosed herein can be implemented in hardware, or implemented as a combination of software and hardware. Consequently, desired features of the invention may be implemented in the environment of a computer system or other processing system. The example computer system **700** includes one or more processors, such as processor **704**. Processor **704** can be a special purpose or a general-purpose digital processor. The processor **704** is connected to one or more communication infrastructures **706** (for example, a bus or network). Various software implementations are described in terms of this exemplary computer system. After reading this description, it will become apparent to a person skilled in the relevant art how to implement the invention using other computer systems and/or computer architectures.

Computer system **700** also includes a main memory **705**, preferably random access memory (RAM), and may also include a secondary memory **710**. The secondary memory **710** may include, for example, a hard disk drive **712**, and/or a RAID array **716**, and/or a removable storage drive **714**, representing an optical disk drive, solid state memory, USB port for a thumb drive, PC card slot, SD card slot for a flash memory, communications conduit to a cloud storage server or service, or other storage device. Secondary memory **710** may also include information storage in another location, but accessible through a network interface, such as storage on a separate computing system or a cloud. The removable storage drive **714** reads from and/or writes to a removable storage unit **718** in a well-known manner. Removable storage unit **718**, for example, may be a magnetic drive, optical disk, thumb drive, flash memory device, etc. As will be appreciated, the removable storage unit **718** includes a computer usable storage medium having stored therein computer software and/or data.

In alternative implementations, secondary memory **710** may include other similar means for allowing computer programs or other instructions to be loaded into computer system **700**. Such means may include, for example, a removable storage unit **722** and an interface **720**. Examples of such means may include a program cartridge and cartridge interface (such as that found in video game devices), a removable memory chip (such as an EPROM, or PROM)

and associated socket, and other removable storage units **722** and interfaces **720** which allow software and data to be transferred from the removable storage unit **722** to computer system **700**.

Computer system **700** may also include a communications interface **724**. Communications interface **724** allows software and data to be transferred between computer system **700** and external devices. Examples of communications interface **724** may include a modem, a network interface (such as an Ethernet interface), a communications port, a wireless network communications device such as an IEEE 802.11x wireless Ethernet device, 3G or 4G cellular data connection, a PC slot and card, cloud or network storage, etc. Software and data transferred via communications interface **724** are in the form of signals **728** which may be electronic, electromagnetic, optical or other signals capable of being received by communications interface **724**. These signals **728** are provided to communications interface **724** via a communications path **726**. Communications path **726** carries signals **728** and may be implemented using wire or cable, fiber optics, a phone line, a cellular phone link, an RF link and other present or future available communications channels.

The terms "computer program medium" and "computer usable medium" are used herein to generally refer to all available types of digital media, for example, removable storage drive **714**, a hard disk installed in hard disk drive **712**, and signals **728**. These computer program products are means for providing software to computer system **700**.

Computer programs (also called computer control logic) are stored in main memory **708** and/or secondary memory **710**. Computer programs may also be received via communications interface **724**. Such computer programs, when executed by the processor **704**, enable the computer system **700** to implement the present invention as discussed herein. In particular, the computer programs, when executed, enable the processor **704** to implement the processes of the present invention. Where the invention is implemented using software, the software may be provided as a computer program product on media or transmitted digitally via one of the network connections available to computer system **700**, and loaded into computer system **700**, for example on raid array **716**, removable storage drive **714**, hard drive **712** or communications interface **724**. The conventional, general-purpose computer systems described herein are customized to form a special purpose, inventive device by the installation of novel software that implements and enables novel methods. This software and the methods employed will now be described in more detail. The scope of the present invention is not limited to the specific examples provided here, but those skilled in the art will gain an understanding of the full scope of the invention through illustrations provided in a series of example embodiments.

Referring to FIG. **2**, in one example embodiment, an inventive system and method make functions available to merchants (and to third-party service providers to merchants) in an Application Programming Interface (API). A hosted system on a secure server **202** provides Financial Account Registration functions and Token Retrieval functions that can be accessed by merchants and others operating websites, for example using merchant server **204**, to process payment transactions. Using the methods disclosed herein, in preferred embodiments merchants are able to process such transactions without transmitting, processing or storing Financial Account data. This reduces the potential liability of the merchants for data loss, and avoids placing their customer tracking and payment processing systems (such as merchant server **204**) within the scope of the present Payment Card Industry Data Security Standard (PCI-DSS), thus reducing compliance costs, development costs, and accelerating time-to-market.

The server that stores the sensitive financial account information will be referred to herein as the "secure server," but this naming convention should not be interpreted to suggest that merchant server **204** cannot also have security features, or otherwise be highly secure in its own right. Further, while server **204** is described in these examples as a "merchant" server for convenience, the systems and processes disclosed herein are not limited to merchants, but are applicable to any operation that needs to process payments. Thus, merchant server **204** may serve merchants, debt collectors, non-profit organizations, political campaigns, service providers of any type, processors serving merchants or sub-merchants, and in general any individual or organization of any type that wishes to process payments from one or more individuals. Further, merchant server **204** may be operated by a third-party service provider to one or more merchants or other entities that wish to process payments using the methods disclosed herein.

Merchant server **204** and secure server **202** are connected by a communications network, such as the Internet, and can also be accessed by computer systems at one or more customer locations represented as **206**, **208**, and **210**. A telephone interactive voice response interface **212** may be connected to secure server **202** and to the telephone network, allowing customer location **210** to provide information to the secure server via telephone, by speech recognition or tone entry. Similarly, a variety of other known communications networks, represented by the example of SMS data network **214**, may be connected to secure server **202** to provide a link to customer equipment for receipt of payment information. The inventors anticipate that any available communications network, whether currently available or newly developed, may be used by the customers to provide financial account information in a secure manner to secure server **202**.

The secure server **202**, merchant server **204**, and computers at customer locations **206**, **208**, and **210** may be, for example, general purpose computers such as the computer hardware described with reference to FIG. **1**. Merchant server **204** and secure server **202** are provided with custom financial information registration software performing one or more functions described in example embodiments herein. The secure server **202** and merchant server **204** are also provided with Internet web server software allowing interactive exchange of information with customer sites **206**, **208** and **210** via the World Wide Web. Computer equipment at customer sites **206**, **208** and **210** are preferably provided with standard web browser software to facilitate interaction with secure server **202** and merchant server **204** as described in the example embodiments herein. For simplicity, servers **202** and **204** are illustrated in the drawings as single hardware units, but those skilled in the art will appreciate that the invention is not limited to any particular hardware configuration; thus, any desired server configuration can be used to implement the methods disclosed herein, including (as non-limiting examples) multiprocessor, multiple, grouped, parallel, distributed, replicated, and mirrored server configurations.

The financial account registration and token retrieval functions provided in the API can be implemented, in a first example, within the merchant's website hosted on merchant server **204**, in a "widget" or frame, using either static or dynamic URL access to secure server **202** (the hosted system

that maintains the financial data). Secure server **202** returns a token or other account identifier constituting a symbolic representation of the financial account information to merchant server **204** after the financial account information has been registered at secure server **202**. Thereafter, merchant server **204** may use the token to process further payment transactions authorized by the end user or customer at sites **206**, **208**, **210** in their interaction with the merchant. Merchant server **204** may store customer identification information, purchase history, and other data that does not include financial account information such as credit card information, without being subject to PCI compliance requirements.

In an embodiment, an authenticated customer enrollment session is established, and a last stage of the enrollment session is completed via a communications link such as telephone link **212** or Internet link **216**. The enrollment session is initiated by a merchant or collector who has obtained at least an initial identification of the customer. In an embodiment, an initial portion of the enrollment session is completed on the merchant's server, with data entry by a customer service agent who receives information over a telephone, by input from the customer over a network such as the Internet, or using an initial data file received from another source, such as a merchant's customer information file.

A second portion of the enrollment session is then completed on secure server **202**. In a preferred embodiment, financial account information used to make one or more payments is submitted to secure server **202** while other data elements such as the customer's name and address are submitted to merchant server **204**. Secure server **202**, in a preferred embodiment, stores the financial account information received from the customer (for example from sites **206**, **208**, or **210**) and provides a token to merchant server **204**. Financial account information may include, for example, credit card numbers and security codes, bank routing and account numbers, or other financial account identifiers. While certain advantages can be realized by storing financial account information on secure server **202**, storage of data on secure server **202** is not limited to such information; secure server **202** may receive and store information other than financial account information, to the extent the merchant wishes to store such additional information on secure server **202** rather than on the merchant server **204**. The token is an index to the stored financial account information for that customer, and is stored by the merchant in connection with the customer record, then used by the merchant to identify the customer account to be debited to process a payment authorized by the customer.

FIG. **3** is a flow chart showing an example embodiment of a general method and process for enrolling a payer in an electronic system and then making a payment based on the enrollment. The method starts with step **302**, in which enrollment data identifying a payer is stored in a first computing system. The first computing system may be, for example, the merchant server **204** shown in FIG. **2**. The first computing system may be operated by a merchant, bill collector, or other individual or organization that will be the payee for anticipated payment transactions. As an example, this step can be accomplished by taking information from the payer over the telephone and entering it into merchant server **204**, or by the payer entering their identifying information on an Internet website generated by merchant server **204** and operated by the payee or an agent of the payee.

Next, in step **304**, the first computing system (for example, the merchant server **204**) generates an electronic instruction to a second computing system, such as secure server **202**, to obtain financial account information from the payer. The desired financial account information is distinguished, in this example, from identifying information in that financial account information refers to specific data used to process a payment, such as a credit card number, security code, and expiration date used to charge a credit card account, or the bank account and routing numbers used to process Automated Clearing House (ACH) transactions. The second computing system, in this example secure server **202**, may typically be set up to provide a higher level of security than the merchant server in order to protect the sensitive financial account information that will be stored there, as such information could be used to perpetrate a fraud in case of a security breach. The instruction to the secure server **202** to obtain financial account information may also optionally include information specifying one or more available communications links to be used to obtain this financial account information. For example, as shown in FIG. **2**, the World Wide Web, computers and mobile devices having access to email, text, SMS messaging, or other data networks, and voice or tone-responsive telephone connections may all be used to obtain the financial account information.

In step **306**, this instruction is transmitted to the second computing system, which in this example is the secure server **202** of FIG. **2**, for action.

In step **308**, the second computing system communicates with the payer, through any of the communications channels described herein or any other available communications channel. The communications channel to be used may be determined by pre-programmed preferences or by the instruction from the merchant server, as appropriate to the situation. During this communication, the payer is preferably able to provide the sensitive financial account information to the second computing system without this information being visible or audible to personnel employed by the operator of the first computing system.

In step **310**, the financial account information is stored in the second computing system and a token is generated for the referring payee (e.g. the merchant or operator of the merchant server). The token is a pointer that allows the payee to reference the financial account information of that payer without possessing the actual financial account information.

In step **312**, the first computing system receives the token from the second computing system in response to its instruction to obtain financial account information for the payer. The token is stored in the first computing system in association with the electronic enrollment data for the payer. This completes the registration of the payer so as to enable one or more intended payments to the payee using the stored financial account information.

Next, in step **314**, at any time after registration is complete, the payee can process an authorized payment from the payer by electronically generating a payment transaction instruction in the first computing system, including a representation of the token, and electronically transmitting the payment transaction instruction to a computing system other than the first computing system having access to said financial account information. For example, the instruction may be transmitted to the second computing system, e.g. the secure server **202**. However, those skilled in the art will appreciate that computing processes may be divided between computers in a network in any desired manner, and that any number of computers may be used to perform a set of processing steps as is known in the art. Therefore, in this example the inventors have described the process in terms of a relatively simple exchange of data and instructions

between two servers, but anticipate that in practice, these functions may be performed in some cases by a single computing system, and in other cases by a plurality of computing devices with the tasks divided between the computers in any desired manner. The second computer system or another computer system that receives the instructions and token (and can access the financial account information based on the token) processes the payment as requested, without the first computing system having any direct access to the payer's financial account information represented by the token.

In an example embodiment, to process a payment from the customer, merchant server **204** submits the token corresponding to the customer account to be debited and information specifying the amount of the payment to the secure server **202**. The operator of the secure server **202** then processes the payment using the financial account pointed to by the token, and makes the proceeds available to the merchant. In this way, the merchant retains control of the customer's enrollment information and the ability to process payments whenever authorized, using financial account information provided by the customer, but does not hold the underlying financial account information or have security responsibility for that information.

In an embodiment, the enrollment session described with reference to the flow chart of FIG. **3** is established under the control of merchant server **204** and may optionally have a defined period of persistence, during which the second portion of the enrollment (submission of financial account information to the second computing system) is completed through secure server **202**. The session may be set to expire after a specified time, if the second portion of the enrollment, e.g. the submission of financial account information to be linked with the enrollment, is not completed within that period.

The communications link established between the end user at locations **206**, **208**, **210** and the secure server **202** to complete the enrollment process may be either synchronous with the data link used to enter information into the merchant's server, or may be asynchronous. As non-limiting examples of communications channels that can be used for storing information on the secure server, telephone link **212**, Internet link **216**, and other available links such as SMS link **214** may be used to obtain the information.

Telephone. The customer may be transferred to, or invited to call, or may receive an automated call after having provided his/her telephone number, from an interactive voice response (IVR) system associated with the secure server operating through telephone interface **212**. In this manner the customer may key in or speak the account number, preferably without any merchant representatives present on the call (although a three-way call can also be implemented if desired), and thus store this information in secure server **202**.

Internet. Merchant server **204** may provide the customer at site **206**, **208** or **210** with a widget or redirected URL that provides an online window for direct, preferably secure communication with the secure server **202** for entry of financial account information. If desired, the widget or window may be designed to appear as part of the merchant's data entry screen transmitted to the customer's browser from merchant server **204**, so that the process of registering with data stored on two separate servers is seamless from the viewpoint of the customer. In another embodiment, the customer may receive an email via internet connection **216** containing a secure web address link or other instructions for providing the financial account information.

Other. Alternatively, the customer may receive a text communication via SMS interface **214** or any other available communications interfaces (not shown) containing a link to a secure web address or other instructions for entry of the financial account information.

In an embodiment, the merchant assigns a unique identification number to the customer, and the identification number or an index entry to the identification number is transmitted to the secure server as part of enrollment information that allows linking the data on the secure server to the particular customer enrollment record on the merchant's server.

To establish the second data entry session and link it to the appropriate open enrollment session, the customer may be invited to enter a shared secret, such as an assigned access key, partial or complete social security number, account number, telephone number, password, or other data to authenticate the customer for the second session. If the second session is synchronous with the first session (for example, the two data entry points are provided simultaneously on the same web page or a caller is transferred directly to an IVR system at the conclusion of a debt collection or order taking call) the existence of the connection with the customer for the merchant server data entry may provide sufficient authentication for a direct transfer to the second data entry process, without further authenticating steps. If the two processes are non-synchronous, for example, the second data entry occurs at some later time or even a later date, a further authentication may be appropriate. In an embodiment, the connection instructions and authentication shared secret may be provided to the customer by the secure server **202** without the merchant having such information, thus providing a further level of security to avoid employees of the merchant accessing the second session or its data.

Embodiments described herein provide significant unobvious advantages. For example, the process disclosed eliminates the possibility of security breaches at the merchant location that would expose financial account data, due to a keystroke logger, camera, or other similar data breach. The financial account information is never provided to the merchant's personnel, nor does it go through the merchant server or network. This mechanism may also reduce the amount of data entry required of the end user and reduce keyboarding errors.

In an embodiment, the token provided to the merchant is a symbolic representation of a financial instrument or account that is only meaningful to the merchant. Knowledge of this token is required for an authorized user to use the financial instrument or account.

The secure server **202** or "hosted system" preferably meets acknowledged security standards, such as PCI compliance, to safeguard the financial account information secured there. The secure server **202** processes transactions using this secured information upon receipt of instructions and a token or other customer identifier from the merchant system that identifies the account to be charged.

Transactions processed may include, for example, credit card, ACH, and any other type of transaction processed using stored financial account information. In addition, other information (beyond financial account information) can be stored in connection with the customer identifier or token. For example, other customer and credit account information may be stored by the host system in connection with the customer record associated with the customer identifier or token. Further, the payee may specify what types of cards are accepted as payment mechanisms. A payee can decide to

accept or not accept various types of cards, such as debit cards, prepaid cards, and cards from particular issuing banks.

In another example embodiment, the merchant or other payee may provide an incentive for the payer to follow through with the process by entering financial account information for storage in the secure server. Information on an incentive for completing the intended payment setup may be transmitted to the secure server along with the instructions for obtaining the financial account information. The secure server then sends a message to the payer through one or more of the available communications channels (either initially, or in a follow-up message if the process is not completed promptly), offering the payer the indicated incentive. For example, the payer may be offered a discount, a gift, a coupon or voucher for additional goods or services, or any other desired incentive to complete the entry of financial account information and enable an expected payment.

FIGS. **4***a* through **4***l* together comprise a multi-page flow chart of a further detailed example embodiment of the system and method disclosed herein. The numbered connecting points in these flow charts correspond to the numbered connecting point the continuing process can be found. The functions performed are indicated in the flow chart blocks.

Further, the flow charts of FIGS. **4***a* through **4***l* incorporate "swim lane" information indicating where functions may be performed in the example embodiment. Locations shown include the End User system (for example, systems at location **206**, **208** or **210**), merchant server **204** (sometimes referred to as the "Payment Application" server), a Web Browser also operating at locations **206**, **208**, or **210**, and the secure server **202** (sometimes referred to as the "Financial Account Registration Application" server). Functions are also divided in the example embodiment of FIG. **4***a*-**4***l* among a calling system ("Integrated System"), and a secure server or combination of servers comprising the API engine (sometimes designated in the flow chart as PayAPI), a payment hub associated with the API engine, and a Financial Account Warehouse (secure storage location). An external credit card network is also connected to the system via a communications channel such as the Internet.

Those skilled in the art will appreciate that the flow charts provided herein are only one example implementation; functions may be reassigned as desired among the functional parts and locations of the system while remaining within the spirit of the invention.

The detailed flow chart starts at FIG. **4***a* with main branch **502**, indicating that the URL interface provided may be implemented either with a static URL in step **506** (designated as **1**B) or a dynamic URL in step **504** (designated as **1**A).

FIGS. **4***b* and **4***c* together show the continuing example flow chart for the dynamic URL implementation. Starting at step **508**, the end user communicates with the Payment Application running on merchant server **204** to request registration of a financial account. The method then continues with a process of logging into the payment gateway (designated as subroutine "**2**"), which is disclosed in more detail in FIG. **4***f*. Next, a financial account registration entry form (designated as subroutine "**3**") is provided, using a process disclosed in more detail in FIG. **4***g*. In step **510**, the application launches a browser window for the end user with a specified Financial Account Registration URL. In step **512**, the end user's web browser initiates a Secure Socket Layer connection to the secure server **202**. In step **514**, the secure server **202** responds to establish the SSL connection.

Next, in step **516**, the Financial Account Registration Application in secure server **202** dynamically generates financial account registration request form data and transmits this data to the end user's web browser. In step **518**, the browser displays the form for the end user.

The end user, in steps **520** and **522**, selects the financial account type to be registered, either credit card or bank account.

If a credit card is selected, the process continues at step **524** where credit card fields are displayed for the end user. Continuing on FIG. **4***c*, in step **530** the end user inputs card data. Then, in step **534**, the browser encrypts the entered card data using SSL protocols. The Financial Account Registration Application confirms the end user's login (designated as Subroutine "**2**", see FIG. **40** and performs the card registration process shown in FIGS. **4***i* and **4***j* (designed as Subroutine "**5**").

If a bank account is selected, the process continues from step **522** to step **526** where bank account data entry fields are displayed for the end user. Continuing on FIG. **4***c*, in step **528** the end user inputs bank account data. Then, in step **534**, the browser encrypts the entered bank account data using SSL protocols. The Financial Account Registration Application confirms the end user's login (designated as Subroutine "**2**", see FIG. **4***f*) and performs the bank account registration process shown in FIG. **4***k* (designed as Subroutine "**6**").

As shown in FIG. **4***c*, regardless of whether a card or bank account was selected for registration, after Subroutine **6** or **7** is processed to register the financial account information, operation continues at step **535** where the financial account registration application parses and logs the response from the appropriate registration subroutine. Next, in step **536**, the application sends confirmation codes and a success message to the end user's browser. In an embodiment, the confirmation codes are an array of values presented to the end user during enrollment confirmation that serve as a shared secret between the system and the end user. The confirmation codes may be used in conjunction with the external request ID as a key to retrieving a token from the system.

The browser displays a confirmation in step **538**, and in step **540** the end user's system requests a reference ID that identifies the just-registered card or account. After validating the user's login to the Payment Application (merchant server **204**), the reference ID (also referred to as a financial account token) is transmitted to the merchant server **204** using the process in FIG. **4***l*, (designated as Subroutine "**7**"). The payment application in the merchant server **204** displays a success message in step **542** and stores the reference ID for future use, in step **544**.

FIGS. **4***d* and **4***e* combine to show an example flow chart for a static URL implementation. Referring first to FIG. **4***d*, this process starts at step **546** when the end user requests registration of a financial account. Subroutine "**2**" is then activated in the merchant server payment application to ensure that the end user is properly identified by the system and that information entered by the end user is associated with the correct user and account. The payment application then displays an array of codes in step **548** and launches a web browser with a financial account registration URL **550**.

In step **552**, the end user's browser requests an SSL connection from the indicated static URL pointing to the secure server **202**, and in step **554** the financial account registration application establishes the SSL connection. In step **556** the registration application sends account registration request form data in a static form to the browser. Then, the browser displays the static form in step **558**. In steps **560**

and **562**, the end user's system transmits the array of codes (provided by the payment application in step **548**) in an encrypted form to the financial account registration application. The financial account registration application then sequentially executes Subroutines "**4**", "**2**", and "**3**". Subroutine "**4**" implements IP address access and restrictions as shown in FIG. **4***h*. Subroutine "**2**" verifies identity of the user (see FIG. **40**, and Subroutine "**3**" obtains the financial account registration entry form (see FIG. **4***g*).

Next, in step **564**, the financial account registration entry form is transmitted to the end user's browser and rendered in step **566**. The end user selects a financial account type in step **568**. If a card is selected, the process continues with step **570** and the card registration fields are rendered.

If a credit card is selected, the process continues in FIG. **4***e* at step **530** where the end user inputs card data. Then, in step **534**, the browser encrypts the entered card data using SSL protocols. The Financial Account Registration Application confirms the end user's login (designated in the flow chart as Subroutine "**2**", see FIG. **4***f*) and performs the card registration process shown in FIGS. **4***i* and **4***j* (designated in the flow chart as Subroutine "**5**").

If a bank account is selected, the process continues in FIG. **4***e* at step **528** where the end user inputs bank account data. Then, in step **534**, the browser encrypts the entered bank account data using SSL protocols. The Financial Account Registration Application confirms the end user's login (designated in the flow chart as Subroutine "**2**", see FIG. **40** and performs the bank account registration process shown in FIG. **4***k* (designated in the flow chart as Subroutine "**6**").

Regardless of whether a card or bank account was selected for registration, after subroutine **6** or **7** is processed to register the financial account information, operation continues as shown in FIG. **4***e* at step **535**, where the financial account registration application parses and logs the response from the appropriate registration subroutine. Next, in step **536**, the application sends confirmation codes and a success message to the end user's browser. The browser displays a confirmation in step **538**. In step **539**, the array of confirmation codes is provided. In an embodiment, the confirmation codes are an array of values presented to the end user during enrollment confirmation that serve as a shared secret between the system and the end user. The confirmation codes may be used in conjunction with the external request ID as a key to retrieving a token from the system. In step **540** the end user's system uses the confirmation codes to request a reference ID that identifies the just-registered card or account. After validating the user's login to the Payment Application (merchant server **204**), the reference ID (also referred to as a financial account token) is transmitted to merchant server **204** using the process in FIG. **4***l*, (designated as Subroutine "**7**"). The payment application in the merchant server **204** displays a success message in step **542** and stores the reference ID for future use, in step **544**.

FIG. **4***f* shows an example embodiment of a payment gateway login function subroutine, referenced in the various flow charts of FIG. **4** as Subroutine "**2**". Starting at step **573**, the routine determines whether the session identifier provided by the end user is valid for a current active session. If so, the process concludes at step **598** and the user is permitted to access the relevant system. If not, a login request method is invoked at step **574**. The API then parses the request at step **576**, and authenticates the system user at step **578**. During step **578** the system may access the organization application and user key registry at step **580**. In step **582**, the system determines whether the request is authentic.

If not authentic, an error response is generated in step **592**, an error message is displayed in step **594**, and the subroutine concludes at step **596** where the user is not permitted to advance, i.e. access the system. If the request is deemed authentic in step **582**, the request is validated in step **584** through a validation engine operational step **586**. The request is logged and an external request ID is stored in step **588**. The external request ID is an input parameter for session requests. In an embodiment, the external request ID serves as a shared secret between the requesting application and the system, and is later used as a key to retrieving a token from the system.

In step **590**, if the validation step **584** indicated a valid request, a login success response occurs at step **604**, the session ID is stored at step **606**, a success message is transmitted, parsed and displayed in step **600**, session ID is stored at step **602**, and the user is allowed to advance (step **598**). If the request is deemed invalid at step **590**, processing continues with steps **592-596** as described previously.

FIG. **4***g* shows an example process for obtaining a financial account registration entry form. Starting at step **402**, the process invokes a method for obtaining the form as established in the API. In step **404** the system stores the external request ID received from the system requesting the collection of financial account information. The API engine in the secure server **202** parses the request in step **406**. In step **408**, the API validates the request by connecting to the validation engine (step **410**). In step **412**, the API determines whether the request is valid. If not, an error response is generated in step **414** and an error message is displayed in step **416**. If the request is valid, the process continues at step **418** where the request is checked against any programmed restrictions at the payee level by interacting with the payment hub (step **420**) to ensure validity of the request. For example, if the payee has indicated it does not wish to accept credit cards, a request to store credit card information would be invalid. In step **422**, the request is similarly checked against any customer-level restrictions on account type, by obtaining data stored in the payment hub (step **424**). For example, if a particular category of customer is permitted to pay only with a credit card and not using a bank account, requests outside the permitted operations would be invalid. Then, in step **426**, the request is checked against any "customer account level" restrictions on account type, by obtaining data stored in the payment hub (step **428**).

In step **430**, the API creates a registration URL and (optionally) establishes an expiration time for the URL. The expiration time may be 5 minutes, 30 minutes, several hours, or a day or more, depending on the nature of the interaction with the payer, which will determine the scope of a "reasonable time" to complete the transaction. In a seamless online transaction, the time allowed might be relatively short, for example, measured in minutes. In a bill collector transaction where the payer has agreed to go online at a later time and enter payment information, the time allowed would be longer, for example, measured in days. In step **432**, the URL creation time is logged and the external request ID is stored. In step **434**, a success response is generated. In step **436**, the calling system receives the success response from the API and logs the response. Then, in step **438**, the subroutine is concluded and control advances to the next function in the calling program.

FIG. **4***h* is a flow chart for Subroutine "**4**", which verifies IP address access and restrictions. First, in step **440**, the IP address seeking access to the system is checked for restrictions, through interaction with a database of restricted addresses (step **442**). In step **444**, the subroutine branches

based on the restrictions found. If the IP address is restricted, then in step **446** an error response is generated and in step **448** the end user's web browser displays the error message. If no restriction is found, the process continues at step **450**, and the request is judged as either authentic or not authentic. If the request is authentic, the subroutine terminates at step **452**. If the request is not authentic, it is logged at step **454** and the time of the request is recorded in step **456**. In step **458**, the history of requests from the IP address is reviewed with reference to a request log (step **460**). In step **462**, if the number of allowed failed requests in a given time period has not been exceeded, the subroutine terminates at step **452**. If the number of allowed failed requests from an IP address has been exceeded, the IP address is added to the restricted list in step **464**, a lockout is established in step **466**, and a lockout message is displayed in step **468**.

FIGS. **4***i* and **4***j* (taken together) comprise a flow chart showing the card account registration process, referenced as Subroutine "**5**". Referring first to FIG. **4***i*, the system initially invokes an API method to add a credit card account, in step **470**. In step **472**, the external request ID associated with the customer is stored. In step **474**, the API engine parses the request and in step **476**, validates the request. If the request is invalid in step **478**, an error response is generated in step **480**, and the error message is displayed in step **482**. The subroutine then terminates in step **484** without registering a card.

If the request is valid in step **478**, an authorization request is generated in step **486**, and the request is logged in step **487**.

Continuing in FIG. **4***j*, the authorization request is processed by the card network in step **488** and a response is generated in step **489**. The API engine receives the response and parses it and records it, in step **490**. If the card data was authorized, in step **491**, an approval response is generated in step **495**, the approval response is transmitted to the calling system in step **496**, and the subroutine terminates in step **497**. Also, in case of authorization, the payment hub logs the response and stores the reference ID. The financial account secure server (referred to as the "warehouse") stores the financial account information (card information) and the external request ID in step **499**.

If the credit card is not authorized in step **491**, a decline response is generated in step **492**, an error message is displayed for the user in step **493**, and the subroutine terminates at step **494** without storing card information.

FIG. **4***k* is a flow chart for the bank account registration subroutine (referenced as subroutine "**6**"). In step **608**, the add bank account method of the API is invoked by the calling system, and the external request ID is stored in step **612**. In step **610**, the API engine parses the request and validates it in step **614** by communicating with a validation engine (step **616**). Step **618** determines whether the request is valid. If so, an approval response is generated in step **630**. Then, in step **632** the request is logged, the external request ID is stored, and the reference ID is stored, and in step **634** the bank account information and external request ID are stored in the secure server. At the same time, in step **628**, the approval response is received by the calling system and parsed and logged, whereupon the subroutine terminates at step **626**.

If the request is not valid in step **618**, an error response is generated at step **620**, the response is transmitted to the calling system, where it is parsed at step **622** and displayed, and the subroutine terminates at step **624** without storing any bank account information.

FIG. **4***l* is a subroutine for a process of obtaining a financial account token. In step **636**, the get token request method of the API is invoked by the calling system. The API engine parses the request in step **646** and validates it in step **648**. If the request format is invalid, an error response is generated in step **652** and an error message is displayed in step **640**, whereupon the subroutine terminates. If the request format is valid, the financial account reference ID(s) are retrieved in step **654**, and a success response is generated in step **656**. The response is parsed by the calling system in step **642** and the subroutine terminates in step **644**.

The programmed functions implementing the methods and processes described herein can be provided in a variety of forms. In one preferred embodiment, as noted previously, the functions provided by secure server **202** may be accessed in the form of an API defining functions available to the merchant server **204**. These functions may be implemented in the manner described in U.S. Provisional Patent Application Ser. No. 61/655,482 filed Jun. 5, 2012 and U.S. Provisional Patent Application Ser. No. 61/698,574 filed Sep. 8, 2012, the disclosures of which are incorporated herein by reference. Those skilled in the art will appreciate that the method of defining the API and the particular API features provided may be varied as desired within the scope of the invention, to implement desired concepts described herein and variations on those concepts that will be apparent to those skilled in the art after reviewing this specification.

The screen displays described herein may be designed in any desired manner consistent with achieving the goals of a particular variation, and the screen displays may take various forms without departing from the scope or spirit of the invention. For example, the screen displays may have the form disclosed in U.S. Provisional Patent Application Ser. No. 61/655,482 filed Jun. 5, 2012 and U.S. Provisional Patent Application Ser. No. 61/698,574 filed Sep. 8, 2012, the disclosures of which are incorporated herein by reference.

Although illustrative embodiments have been described herein in detail, it should be noted and understood that the descriptions and drawings have been provided for purposes of illustration only and that other variations both in form and detail can be added thereto without departing from the spirit and scope of the invention. The terms and expressions in this disclosure have been used as terms of description and not terms of limitation. Thus, the breadth and scope of the present invention should not be limited by any of the above-described exemplary embodiments, but should be defined only in accordance with the claims and their equivalents. The terms and expressions herein should not be interpreted to exclude any equivalents of features shown and described, or portions thereof.

We claim:

1. A method of processing a payment transaction from a payer to a payee, the method being performed by one or more secure servers, the method comprising:

providing, by the one or more secure servers to a merchant server providing a webpage to a payer computing system used by the payer, an application programming interface (API) that:

provides financial account registration and token retrieval functions that can be executed to process the payment transaction;

provides access to the financial account registration and token retrieval functions to the merchant server;

receives, from the merchant server via the API, at least one data element associated with the payer and a payment amount from the payer to the payee;

authenticates the payee; and

executes the financial account registration function, upon initiation by the merchant server, by:

generating a uniform resource locator (URL), for establishing a secure socket layer connection via the internet between the secure server and the payer computing system, the URL comprising either:

a dynamic URL generated by the secure server for the payer and the payee; or

a static URL and a hypertext transport protocol (HTTP) parameter used by the secure server to identify the payer and the payee;

establishing the secure socket layer connection, in response to an HTTP request received from the merchant server for the generated URL, between the secure server and the payer computing system within a window or frame that is displayed within the webpage provided by the merchant server;

outputting instructions to the payer computing system, in response to the HTTP request for the generated URL, to render a financial account registration request form, within the window or frame that is displayed within the webpage provided by the merchant server, that provides functionality for the payer to provide sensitive financial account information associated with a financial account; and

outputting instructions to the payer computing system, in response to the HTTP request for the generated URL, to encrypt the sensitive financial account information provided by the payer and transmit the encrypted financial account information to the secure server via the secure socket layer connection;

receiving the sensitive financial account information provided by the payer via the secure socket layer connection;

storing the sensitive financial account information in a secure storage location and performing each software process required to maintain compliance with one or more information security standards;

executing a token retrieval function, upon initiation by the merchant server via the API, by:

providing a non-sensitive electronic data token representing the sensitive financial account information to the merchant server without providing the sensitive financial account information to the merchant server and without providing the non-sensitive electronic data token to the payer; and

processing the payment transaction using the sensitive financial account information by generating and transmitting an electronic request requesting the payment amount from the financial account, obtaining the payment amount, and forwarding at least a portion of the payment amount to the payee.

2. The method of claim **1**, further comprising:

receiving a second payment transaction instruction from the merchant server, the second payment transaction instruction including a representation of the non-sensitive electronic data token and specifying a second payment amount;

processing the second payment by obtaining the second payment amount using the sensitive financial account information represented by the non-sensitive electronic data token; and

forwarding at least a portion of the second payment amount to the payee.

3. The method of claim **2**, wherein the representation of the non-sensitive electronic data token is the non-sensitive electronic data token.

4. The method of claim **1**, wherein the non-sensitive electronic data token constitutes a symbolic representation of the sensitive financial account information.

5. The method of claim **1**, wherein the at least one data element associated with the payer is a customer identification number generated by the merchant server to identify the payer.

6. The method of claim **1**, wherein the secure socket layer connection is synchronous or asynchronous with a process, performed by the merchant server, to receive enrollment data provided by the payer.

7. The method of claim **1**, wherein the sensitive financial account information includes at least one of a credit card number or bank account number.

8. A secure server that processes a payment transaction from a payer to a payee, the secure server comprising:

one or more processors; and

memory storing instructions that, when executed by the one or more processors, cause the secure server to:

provide an application programming interface (API) to a merchant server providing a webpage to a payer computing system used by the payer, the API configured to:

provide financial account registration and token retrieval functions that can be executed to process the payment transaction;

provide access to the financial account registration and token retrieval functions to the merchant server;

receive, from the merchant server via the API, at least one data element associated with the payer and a payment amount from the payer to the payee;

authenticate the payee;

execute the financial account registration function, upon initiation by the merchant server, by:

generating a uniform resource locator (URL) to establish a secure socket layer connection via the internet between the secure server and the payer computing system, the URL comprising either:

a dynamic URL generated by the secure server for the payer and the payee; or

a static URL and a hypertext transport protocol (HTTP) parameter used by the secure server to identify the payer and the payee;

establishing the secure socket layer connection, in response to an HTTP request received from the merchant server for the generated URL, between the secure server and the payer computing system within a window or frame that is displayed within the webpage provided by the merchant server;

outputting instructions to the payer computing system, in response to the HTTP request for the generated URL, to render a financial account registration request form, within the window or frame that is displayed within the webpage provided by the merchant server, that provides functionality for the payer to provide sensitive financial account information associated with a financial account; and

outputting instructions to the payer computing system, in response to the HTTP request for the generated URL, to encrypt the sensitive financial account information provided by the payer and transmit the encrypted financial account information to the secure server via the secure socket layer connection;

receive the sensitive financial account information provided by the payer via the secure socket layer connection;

store the sensitive financial account information in a secure storage location and perform each software process required to maintain compliance with one or more information security standards;

execute a token retrieval function, upon initiation by the merchant server by the API, by:

providing a non-sensitive electronic data token representing the sensitive financial account information to the merchant server without providing the sensitive financial account information to the merchant server and without providing the non-sensitive electronic data token to the payer; and

processing the payment transaction using sensitive the financial account information by generating and transmitting an electronic request requesting the payment amount from the financial account, obtaining the payment amount, and forwarding at least a portion of the payment amount to the payee.

9. The secure server of claim **8**, wherein the instructions further cause the secure computing system to:

receive a second payment transaction instruction from the merchant server, wherein the second payment transaction instruction includes a representation of the non-sensitive electronic data token and specifies a second payment amount;

process the second payment by obtaining the second payment amount using the sensitive financial account information represented by the non-sensitive electronic data token; and

forward at least a portion of the second payment amount to the payee.

10. The secure server of claim **9**, wherein the representation of the non-sensitive electronic data token is the non-sensitive electronic data token.

11. The secure server of claim **8**, wherein the non-sensitive electronic data token constitutes a symbolic representation of the sensitive financial account information.

12. The secure server of claim **8**, wherein the at least one data element associated with the payer is a customer identification number generated by the merchant server to identify the payer.

13. The secure server of claim **8**, wherein the secure socket layer connection is synchronous or asynchronous with a process, performed by the merchant server, to receive enrollment data from the payer.

14. The secure server of claim **8**, wherein the sensitive financial account information includes at least one of a credit card number or bank account number.

15. A method of enrolling a payer by a merchant server operated by or for the benefit of a payee, the method comprising:

providing a webpage to a payer computing system used by a payer;

receiving enrollment data identifying the payer;

providing, to a secure server via an application programming interface (API) provided by the secure server, at least one data element associated with the payer and a payment amount from the payer to the payee;

displaying a window or frame within the webpage provided to the payer computing system;

providing authentication credentials to the API to establish an authenticated session, the authentication credentials identifying the payee and authenticating the payee;

initiating a financial account registration function of the API during the authenticated session, the financial account registration function:

establishing a secure socket layer connection between the secure server and the payer computing system within the window or frame;

outputting instructions to the payer computing system to render a financial account registration request form, within the window or frame, that provides functionality for the payer to provide sensitive financial account information associated with a financial account; and

outputting instructions to the payer computing system to encrypt the sensitive financial account information provided by the payer and transmit the encrypted financial account information to the secure server, via the secure socket layer connection, without providing the sensitive financial account information to the merchant server;

initiating a token retrieval function of the API during the authenticated session, the token retrieval function outputting a non-sensitive electronic data token representing the sensitive financial account information to the merchant server;

receiving the non-sensitive electronic data token from the secure server, wherein the merchant server does not receive the sensitive financial account information represented by the non-sensitive electronic data token and the secure server does not provide the non-sensitive electronic data token to the payer;

storing the non-sensitive electronic data token in association with the enrollment data identifying the payer; and

processing a payment from the payer by generating a payment transaction instruction, using the token retrieval function of the API, that includes a representation of the non-sensitive electronic data token and instructs the secure server to generate and transmit an electronic request requesting the payment amount from the financial account, obtain the payment amount, and forward at least a portion of the payment amount.

16. The method of claim **15**, wherein the representation of the non-sensitive electronic data token is the non-sensitive electronic data token.

17. The method of claim **15**, wherein the non-sensitive electronic data token constitutes a symbolic representation of the sensitive financial account information.

18. The method of claim **15**, wherein the at least one data element associated with the payer is a customer identifier generated by the merchant server to identify the payer.

19. The method of claim **15**, wherein the secure socket layer connection provides access to the secure server using a static or dynamic uniform resource locator (URL).

20. The method of claim **15**, wherein the secure socket layer connection is synchronous or asynchronous with a process, performed by the merchant server, to receive enrollment data from the payer.

21. The method of claim **15**, wherein the enrollment data identifying the payer is received from the payer over a network.

22. The method of claim 15, wherein the sensitive financial account information includes at least one of a credit card number or bank account number.

23. A merchant server, operated by or for the benefit of a payee, comprising:

one or more computer processors; and

non-transitory computer readable storage media storing instructions that, when executed by the one or more computer processors, cause the merchant server to:

provide a webpage to a payer computing system used by a payer;

receive enrollment data identifying the payer;

provide, to a secure server via an application programming interface (API) provided by the secure server, at least one data element associated with the payer and a payment amount from the payer to the payee;

display a window or frame within the webpage provided to the payer computing system;

provide authentication credentials to the API to establish an authenticated session, the authentication credentials identifying the payee and authenticating the payee;

initiate a financial account registration function of the API during the authenticated session, the financial account registration function:

establishing a secure socket layer connection between the secure server and the payer computing system within the window or frame;

outputting instructions to the payer computing system to render a financial account registration request form, within the window or frame, that provides functionality for the payer to provide sensitive financial account information associated with a financial account; and

outputting instructions to the payer computing system to encrypt the sensitive financial account information provided by the payer and transmit the encrypted financial account information to the secure server via the secure socket layer connection;

initiate a token retrieval function of the API during the authenticated session, the token retrieval function outputting a non-sensitive electronic data token representing the sensitive financial account information to the merchant server;

receive the non-sensitive electronic data token from the secure server, wherein the merchant server does not receive the sensitive financial account information represented by the non-sensitive electronic data token and the secure server does not provide the non-sensitive electronic data token to the payer;

store the non-sensitive electronic data token in association with the enrollment data identifying the payer; and

process a payment from the payer by generating a payment transaction instruction, using the token retrieval function of the API, that includes a representation of the non-sensitive electronic data token and instructs the secure server to generate and transmit an electronic request requesting the payment amount from the financial account, obtain the payment amount, and forward at least a portion of the payment amount.

24. The merchant server of claim 23, wherein the non-sensitive electronic data token constitutes a symbolic representation of the sensitive financial account information.

25. A method of processing a payment transaction from a payer to a payee, the method being performed by one or more secure servers, the method comprising:

providing, by the one or more secure servers to a merchant server providing a webpage to a payer computing system used by the payer, an application programming interface (API) that:

provides financial account registration and token retrieval functions that can be executed to process the payment transaction;

provides access to the financial account registration and token retrieval functions to the merchant server;

receives, from the merchant server via the API, at least one data element associated with the payer and a payment amount from the payer to the payee;

authenticates the payee; and

executes the financial account registration function, upon initiation by the merchant server, by:

generating a uniform resource locator (URL), for establishing a secure socket layer connection via the internet between the secure server and the payer computing system, the URL comprising either:

a dynamic URL generated by the secure server for the payer and the payee; or

a static URL and a hypertext transport protocol (HTTP) parameter used by the secure server to identify the payer and the payee;

establishing the secure socket layer connection, in response to an HTTP request received for the generated URL, between the secure server and the payer computing system;

outputting instructions to the payer computing system, in response to the HTTP request for the generated URL, to render a financial account registration request form that provides functionality for the payer to provide sensitive financial account information associated with a financial account; and

outputting instructions to the payer computing system, in response to the HTTP request for the generated URL, to encrypt the financial account information provided by the payer and transmit the encrypted financial account information to the secure server, via the secure socket layer connection;

receiving the sensitive financial account information provided by the payer via the secure socket layer connection;

storing the sensitive financial account information in a secure storage location and performing each software process required to maintain compliance with one or more information security standards;

executing a token retrieval function, upon initiation by the merchant server via the API, by:

providing a non-sensitive electronic data token representing the sensitive financial account information to the merchant server without providing the sensitive financial account information to the merchant server and without providing the non-sensitive electronic data token to the payer; and

processing the payment transaction using the sensitive financial account information by generating and transmitting an electronic request requesting the payment amount from the financial account, obtaining the payment amount, and forwarding at least a portion of the payment amount to the payee.

26. The method of claim **25**, wherein the URL is a redirect URL that redirects the payer computing system to the secure server.

27. The method of claim **25**, wherein the non-sensitive electronic data token constitutes a symbolic representation of the sensitive financial account information.

* * * * *