US010080472B2

(12) **United States Patent**
Conrad

(10) **Patent No.: US 10,080,472 B2**
(45) **Date of Patent: Sep. 25, 2018**

(54) **HAND CARRIABLE SURFACE CLEANING APPARATUS**

(71) Applicant: **Omachron Intellectual Property Inc.**, Hampton (CA)

(72) Inventor: **Wayne Ernest Conrad**, Hampton (CA)

(73) Assignee: **Omachron Intellectual Property Inc.**, Hampton, Ontario (CA)

(*) Notice: Subject to any disclaimer, the term of this patent is extended or adjusted under 35 U.S.C. 154(b) by 0 days.

(21) Appl. No.: **15/051,272**

(22) Filed: **Feb. 23, 2016**

(65) **Prior Publication Data**

US 2016/0213211 A1 Jul. 28, 2016

Related U.S. Application Data

(63) Continuation of application No. 14/994,495, filed on Jan. 13, 2016, which is a continuation of application

(Continued)

(51) **Int. Cl.**

A47L 5/24	(2006.01)
A47L 5/22	(2006.01)
A47L 9/12	(2006.01)
A47L 9/16	(2006.01)
A47L 9/22	(2006.01)

(52) **U.S. Cl.**

CPC ***A47L 5/24*** (2013.01); ***A47L 5/225*** (2013.01); ***A47L 9/122*** (2013.01); ***A47L 9/16*** (2013.01); ***A47L 9/1608*** (2013.01); ***A47L 9/1683*** (2013.01); ***A47L 9/22*** (2013.01)

(58) **Field of Classification Search**

CPC A47L 5/24; A47L 9/1683; A47L 5/225; A47L 9/122; A47L 9/16; A47L 9/1608; A47L 9/22

See application file for complete search history.

(56) **References Cited**

U.S. PATENT DOCUMENTS

911,258	A	2/1909	Neumann
1,600,762	A	9/1926	Hawley

(Continued)

FOREIGN PATENT DOCUMENTS

AU	112778	4/1940
CA	1077412 A1	5/1980

(Continued)

OTHER PUBLICATIONS

Extended European Search Report received on the corresponding European Patent Application No. 11157642.7-2316, dated May 8, 2012.

(Continued)

Primary Examiner — Christopher M Koehler
Assistant Examiner — Joel Crandall
(74) *Attorney, Agent, or Firm* — Philip C. Mendes da Costa; Bereskin & Parr LLP/S.E.N.C.R.L., s.r.l.

(57) **ABSTRACT**

A hand vacuum cleaner comprises an air flow passage extending from a dirty air inlet to a clean air outlet. A suction motor is positioned in the air flow path. At least one air treatment member, which is optionally a cyclone chamber, is positioned in the air flow path. A pre-motor filter is positioned in a pre-motor filter housing having an openable cover and the air treatment member air outlet axis extends through the pre-motor filter housing.

25 Claims, 20 Drawing Sheets

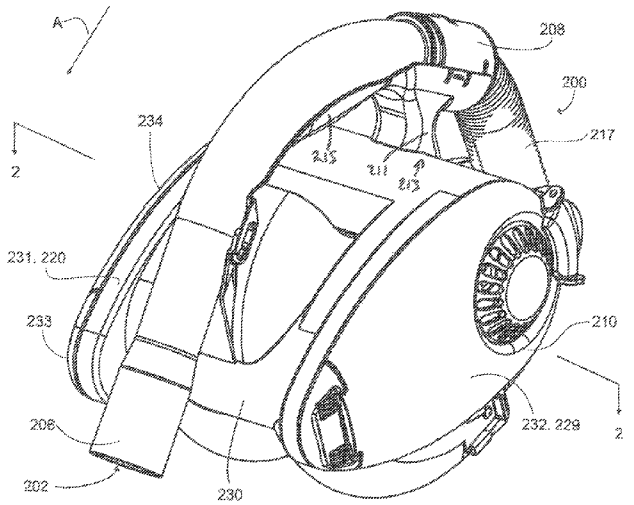

Related U.S. Application Data

No. 13/039,376, filed on Mar. 3, 2011, now Pat. No. 9,265,395, which is a continuation-in-part of application No. 12/722,705, filed on Mar. 12, 2010, now Pat. No. 8,578,555.

(56) **References Cited**

U.S. PATENT DOCUMENTS

1,797,812 A 3/1931 Waring
1,898,608 A 2/1933 Alexander
1,937,765 A 12/1933 Leathers
2,015,464 A 9/1935 Saint-Jacques
2,152,114 A 3/1939 Van Tongeren
2,542,634 A 2/1951 Davis et al.
2,678,110 A 5/1954 Madsen
2,731,102 A 1/1956 James
2,811,219 A 10/1957 Wenzl
2,846,024 A 8/1958 Bremi
2,913,111 A 11/1959 Rogers
2,917,131 A 12/1959 Evans
2,937,713 A 5/1960 Stephenson et al.
2,942,691 A 6/1960 Dillon
2,942,692 A 6/1960 Benz
2,946,451 A 7/1960 Culleton
2,952,330 A 9/1960 Winslow
2,981,369 A 4/1961 Yellott et al.
3,002,215 A 10/1961 MacFarland
3,032,954 A 5/1962 Racklyeft
3,085,221 A 4/1963 Kelly
3,130,157 A 4/1964 Kelsall et al.
3,200,568 A 8/1965 McNeil
3,204,772 A 9/1965 Ruxton
3,217,469 A 11/1965 Eckert
3,269,097 A 8/1966 German
3,320,727 A 5/1967 Farley et al.
3,372,532 A 3/1968 Campbell
3,426,513 A 2/1969 Kurt
3,498,068 A 3/1970 Tadayon
3,518,815 A 7/1970 Peterson et al.
3,530,649 A 9/1970 Porsch et al.
3,561,824 A 2/1971 Homan
3,582,616 A 6/1971 Wrob
3,675,401 A 7/1972 Cordes
3,684,093 A 8/1972 Kono
3,822,533 A 7/1974 Oranje
3,870,486 A * 3/1975 Eriksson A47L 7/0019 55/309
3,877,902 A * 4/1975 Eriksson A47L 5/365 55/337
3,933,450 A 1/1976 Percevaut
3,988,132 A 10/1976 Oranje
3,988,133 A 10/1976 Schady
4,097,381 A 6/1978 Ritzler
4,187,088 A 2/1980 Hodgson
4,218,805 A 8/1980 Brazier
4,236,903 A 12/1980 Malmsten
4,307,485 A 12/1981 Dessig
4,373,228 A 2/1983 Dyson
4,382,804 A 5/1983 Mellor
4,409,008 A 10/1983 Solymes
4,486,207 A 12/1984 Baillie
4,678,588 A 7/1987 Shortt
4,700,429 A 10/1987 Martin et al.
4,744,958 A 5/1988 Pircon
4,778,494 A 10/1988 Patterson
4,826,515 A 5/1989 Dyson
D303,173 S 8/1989 Miyamoto et al.
4,853,008 A 8/1989 Dyson
4,853,011 A 8/1989 Dyson
4,853,111 A 8/1989 MacArthur et al.
4,905,342 A 3/1990 Ataka
4,944,780 A 7/1990 Usmani
2,080,697 A 1/1992 Finke
5,078,761 A 1/1992 Dyson
5,090,976 A 2/1992 Dyson
5,129,125 A 7/1992 Gamou et al.
5,224,238 A 7/1993 Bartlett
5,230,722 A 7/1993 Yonkers
5,254,019 A 10/1993 Noschese
5,267,371 A 12/1993 Solerm et al.
5,309,601 A 5/1994 Hampton et al.
5,347,679 A 9/1994 Saunders et al.
5,481,780 A 1/1996 Daneshvar
5,599,365 A 2/1997 Alday et al.
D380,033 S 6/1997 Masterton et al.
5,755,096 A 5/1998 Holleyman
5,815,878 A 10/1998 Murakami et al.
5,858,038 A 1/1999 Dyson et al.
5,858,043 A 1/1999 Geise
5,893,938 A 4/1999 Dyson et al.
5,935,279 A 8/1999 Kilstrom
5,950,274 A 9/1999 Kilstrom
6,071,095 A 6/2000 Verkaar
6,071,321 A 6/2000 Trapp et al.
6,080,022 A 6/2000 Shaberman et al.
6,122,796 A 9/2000 Downham et al.
6,221,134 B1 4/2001 Conrad et al.
6,228,260 B1 5/2001 Conrad et al.
6,231,645 B1 5/2001 Conrad et al.
6,251,296 B1 6/2001 Conrad et al.
6,260,234 B1 7/2001 Wright et al.
6,341,404 B1 * 1/2002 Salo A47L 5/28 15/350
6,345,408 B1 2/2002 Nagai et al.
6,406,505 B1 6/2002 Oh et al.
6,434,785 B1 8/2002 Vandenbelt et al.
6,440,197 B1 8/2002 Conrad et al.
6,531,066 B1 3/2003 Saunders et al.
6,553,612 B1 4/2003 Dyson et al.
6,553,613 B2 4/2003 Onishi et al.
6,560,818 B1 5/2003 Hasko
6,581,239 B1 6/2003 Dyson et al.
6,599,338 B2 7/2003 Oh et al.
6,599,350 B1 7/2003 Rockwell et al.
6,613,316 B2 9/2003 Sun et al.
6,623,539 B2 9/2003 Lee et al.
6,625,845 B2 9/2003 Matsumoto et al.
6,648,934 B2 11/2003 Choi et al.
6,712,868 B2 3/2004 Murphy et al.
6,746,500 B1 6/2004 Park et al.
6,782,583 B2 8/2004 Oh
6,782,585 B1 8/2004 Conrad et al.
6,818,036 B1 11/2004 Seaman
6,833,015 B2 12/2004 Oh et al.
6,868,578 B1 3/2005 Kasper
6,874,197 B1 4/2005 Conrad
6,896,719 B2 5/2005 Coates et al.
6,929,516 B2 8/2005 Brochu et al.
6,968,596 B2 11/2005 Oh et al.
6,976,885 B2 12/2005 Lord
7,160,346 B2 1/2007 Park
7,162,770 B2 1/2007 Davidshofer
7,175,682 B2 2/2007 Nakai et al.
7,198,656 B2 4/2007 Takemoto et al.
7,210,195 B2 5/2007 Howie et al.
7,222,393 B2 5/2007 Kaffenberger et al.
7,272,872 B2 9/2007 Choi
7,278,181 B2 10/2007 Harris et al.
7,341,611 B2 3/2008 Greene et al.
7,354,468 B2 4/2008 Arnold et al.
7,370,387 B2 5/2008 Walker et al.
7,377,007 B2 5/2008 Best
7,377,953 B2 5/2008 Oh
7,386,915 B2 6/2008 Blocker et al.
7,395,579 B2 7/2008 Oh
7,448,363 B1 11/2008 Rasmussen et al.
7,449,040 B2 11/2008 Conrad et al.
7,488,363 B2 2/2009 Jeong et al.
7,547,336 B2 * 6/2009 Fester A47L 9/122 55/337
7,547,337 B2 6/2009 Oh
7,547,338 B2 6/2009 Kim et al.
7,588,616 B2 9/2009 Conrad et al.
7,597,730 B2 10/2009 Yoo et al.

(56) **References Cited**

U.S. PATENT DOCUMENTS

7,601,188 B2 10/2009 Hwang et al.
7,628,831 B2 12/2009 Gomiciaga-Pereda et al.
7,779,506 B2 5/2010 Kang et al.
7,740,676 B2 6/2010 Burnham et al.
7,770,256 B1 8/2010 Fester
7,774,898 B2 8/2010 Hong et al.
7,776,120 B2 8/2010 Conrad
7,803,207 B2 9/2010 Conrad
7,805,804 B2 10/2010 Loebig
7,811,349 B2 10/2010 Nguyen
7,867,308 B2 1/2011 Conrad
7,922,794 B2 4/2011 Morphey
7,931,716 B2 4/2011 Dakham
7,938,871 B2 5/2011 Lloyd
7,979,959 B2 7/2011 Courtney
8,021,453 B2 9/2011 Howes
8,062,398 B2 11/2011 Luo et al.
8,117,712 B2 2/2012 Dyson et al.
8,146,201 B2 4/2012 Conrad
8,152,877 B2 4/2012 Greene
8,156,609 B2 4/2012 Milne et al.
8,161,599 B2 4/2012 Griffith et al.
8,225,456 B2 7/2012 Hakan et al.
8,484,799 B2 7/2013 Conrad
8,677,558 B2 3/2014 Conrad
2001/0015132 A1 8/2001 Rohn et al.
2002/0011050 A1 1/2002 Hansen et al.
2002/0011053 A1 1/2002 Oh
2002/0062531 A1 5/2002 Oh
2002/0088208 A1 7/2002 Lukac et al.
2002/0112315 A1 8/2002 Conrad
2002/0134059 A1 9/2002 Oh
2002/0178535 A1 12/2002 Oh et al.
2002/0178698 A1 12/2002 Oh et al.
2002/0178699 A1 12/2002 Oh
2003/0046910 A1 3/2003 Lee
2003/0066273 A1 4/2003 Choi et al.
2003/0106180 A1 6/2003 Tsen
2003/0159238 A1 8/2003 Oh
2003/0159411 A1 8/2003 Hansen et al.
2003/0200736 A1 10/2003 Ni
2004/0010885 A1 1/2004 Hitzelberger et al.
2004/0025285 A1 2/2004 McCormick et al.
2004/0088816 A1 5/2004 Shimizu et al.
2004/0216263 A1 11/2004 Best et al.
2004/0216264 A1 11/2004 Shaver et al.
2005/0081321 A1 4/2005 Milligan et al.
2005/0115409 A1 6/2005 Conrad
2005/0132528 A1 6/2005 Yau
2005/0132529 A1 6/2005 Davidshofer
2005/0138763 A1 6/2005 Tanner et al.
2005/0198769 A1 9/2005 Lee et al.
2005/0198770 A1 9/2005 Jung et al.
2005/0252179 A1 11/2005 Oh et al.
2006/0016042 A1* 1/2006 Bruneau A47L 9/122 15/314
2006/0037172 A1 2/2006 Choi
2006/0042206 A1 3/2006 Arnold et al.
2006/0090290 A1 5/2006 Lau
2006/0123590 A1 6/2006 Fester et al.
2006/0137304 A1 6/2006 Jeong et al.
2006/0137306 A1 6/2006 Jeong et al.
2006/0137309 A1 6/2006 Jeong et al.
2006/0137314 A1 6/2006 Conrad et al.
2006/0156508 A1 7/2006 Khalil
2006/0162298 A1 7/2006 Oh et al.
2006/0162299 A1 7/2006 North
2006/0168922 A1 8/2006 Oh
2006/0168923 A1 8/2006 Lee et al.
2006/0207055 A1 9/2006 Ivarsson et al.
2006/0207231 A1 9/2006 Arnold
2006/0230715 A1 10/2006 Oh et al.
2006/0230723 A1 10/2006 Kim et al.
2006/0230724 A1 10/2006 Han et al.
2006/0236663 A1 10/2006 Oh
2006/0277712 A1* 12/2006 Kim A47L 9/122 15/353
2006/0278081 A1 12/2006 Han et al.
2007/0067944 A1 3/2007 Kitamura
2007/0077810 A1 4/2007 Gogel
2007/0079473 A1 4/2007 Min
2007/0079585 A1 4/2007 Oh et al.
2007/0095028 A1 5/2007 Kim
2007/0095029 A1 5/2007 Min
2007/0209334 A1 9/2007 Conrad
2007/0209335 A1 9/2007 Conrad
2007/0271724 A1 11/2007 Hakan et al.
2007/0289089 A1 12/2007 Yacobi
2007/0289266 A1 12/2007 Oh
2007/0289267 A1* 12/2007 Makarov A47L 5/28 55/345
2008/0040883 A1 2/2008 Beskow et al.
2008/0047091 A1 2/2008 Nguyen
2008/0134460 A1 6/2008 Conrad
2008/0134462 A1 6/2008 Jansen et al.
2008/0172821 A1 7/2008 Kang et al.
2008/0178416 A1 7/2008 Conrad
2008/0178418 A1 7/2008 Conrad
2008/0178420 A1 7/2008 Conrad
2008/0190080 A1 8/2008 Oh et al.
2008/0196194 A1 8/2008 Conrad
2008/0196745 A1 8/2008 Conrad
2008/0216282 A1 9/2008 Conrad
2008/0256744 A1 10/2008 Rowntreer et al.
2008/0263813 A1* 10/2008 Han A47L 5/225 15/334
2008/0301903 A1 12/2008 Cunningham et al.
2009/0056060 A1* 3/2009 Han A47L 5/12 15/349
2009/0100633 A1 4/2009 Bates et al.
2009/0113659 A1 5/2009 Jeon
2009/0144932 A1 6/2009 Yoo
2009/0165431 A1 7/2009 Oh
2009/0205160 A1 8/2009 Conrad
2009/0205161 A1 8/2009 Conrad
2009/0205298 A1 8/2009 Hyun et al.
2009/0209666 A1 8/2009 Hellberg et al.
2009/0265877 A1 10/2009 Dyson et al.
2009/0282639 A1 11/2009 Dyson et al.
2009/0300874 A1 12/2009 Tran et al.
2009/0300875 A1 12/2009 Inge et al.
2009/0305862 A1 12/2009 Yoo
2009/0307564 A1 12/2009 Vedantham et al.
2009/0307863 A1 12/2009 Milne et al.
2009/0307864 A1 12/2009 Dyson
2009/0308254 A1 12/2009 Dakham
2009/0313958 A1 12/2009 Gomiciaga-Pereda et al.
2009/0313959 A1 12/2009 Gomiciaga-Pereda et al.
2010/0154150 A1 6/2010 McLeod
2010/0175217 A1 7/2010 Conrad
2010/0212104 A1 8/2010 Conrad
2010/0224073 A1 9/2010 Oh et al.
2010/0229321 A1 9/2010 Dyson et al.
2010/0229322 A1 9/2010 Conrad
2010/0242210 A1 9/2010 Conrad
2010/0243158 A1 9/2010 Conrad
2010/0293745 A1 11/2010 Coburn
2010/0299865 A1 12/2010 Conrad
2010/0299866 A1 12/2010 Conrad
2011/0146024 A1 6/2011 Conrad
2011/0168332 A1 7/2011 Bowe et al.
2011/0219570 A1 9/2011 Conrad
2012/0060322 A1 3/2012 Simonelli et al.
2012/0216361 A1 8/2012 Millington et al.
2012/0222245 A1 9/2012 Conrad
2012/0222262 A1 9/2012 Conrad
2014/0237758 A1 8/2014 Conrad
2014/0237759 A1 8/2014 Conrad
2014/0237768 A1 8/2014 Conrad
2016/0367094 A1 12/2016 Conrad

(56) **References Cited**

U.S. PATENT DOCUMENTS

FOREIGN PATENT DOCUMENTS

CA	1218962	A	3/1987
CA	2593950	C	6/2008
CA	2438079	C	8/2009
CA	2659212	A1	9/2010
CN	1493244	A	5/2004
CN	2657570	Y	11/2004
CN	1887437	A	1/2007
CN	1911151	B	4/2007
CN	201223346	Y	4/2009
CN	101455540	A	6/2009
CN	101657133	A	2/2010
CN	102188208	A	9/2011
CN	103040412	A	4/2013
CN	103040413	A	4/2013
DE	875134	C	4/1953
DE	9017798	U1	2/1992
DE	9216071.9	U1	2/1993
DE	4232382	C1	3/1994
DE	112007003039	T5	10/2009
DE	112007003052	T5	1/2010
EP	493950	B1	7/1992
EP	1031310	A2	8/2000
EP	1200196	B1	6/2005
EP	1535560	A2	6/2005
EP	1674017	A2	6/2006
EP	1779761	A2	5/2007
EP	1676516	B1	1/2010
EP	1629758	A3	10/2013
FR	2812531	B1	11/2004
GB	700791	A	12/1953
GB	1029943	A	5/1966
GB	1111074	A	4/1968
GB	1386055	A	5/1975
GB	2163703	B	1/1988
GB	2268875	A	1/1994
GB	2282979	B	10/1997
GB	2365324	B	7/2002
GB	2372431	A	8/2002
GB	2441962	B	3/2011
GB	2466290	B	10/2012
JP	61131720	A	6/1986
JP	2000140533	A	5/2000
JP	2003180579	A	7/2003
JP	2010178773	A	8/2010
JP	2010220632	A	10/2010
JP	2011189132	A	9/2011
JP	2011189133	A	9/2011
WO	1980002561	A1	11/1980
WO	9627446	A1	9/1996
WO	9809121	A1	3/1998
WO	9843721	A1	10/1998
WO	01/07168	A1	2/2001
WO	2004069021	A1	8/2004
WO	2006026414	A3	8/2007
WO	2008009883	A1	1/2008
WO	2008009888	A1	1/2008
WO	2008009890	A1	1/2008
WO	2008009891	A1	1/2008
WO	2008070962	A1	6/2008
WO	2009/026709	A1	3/2009
WO	2009026709	A1	3/2009
WO	2010102396	A1	9/2010
WO	2010142968	A1	12/2010
WO	2010142969	A1	12/2010
WO	2010142970	A1	12/2010
WO	2010142971	A1	12/2010
WO	2011054106	A1	5/2011
WO	2012042240	A1	4/2012
WO	2012117231	A1	9/2012

OTHER PUBLICATIONS

English machine translation of DE112007003052, as published on Jan. 14, 2010.

English machine translation of DE112007003039, as published on Oct. 29, 2009.

English machine translation of CN103040413, as published on Apr. 17, 2013.

English machine translation of CN103040412, as published on Apr. 17, 2013.

English machine translation of CN102188208, as published on Sep. 21, 2011.

English machine translation of CN101657133, as published on Feb. 24, 2010.

English machine translation of CN1911151, as published on Feb. 14, 2007.

* cited by examiner

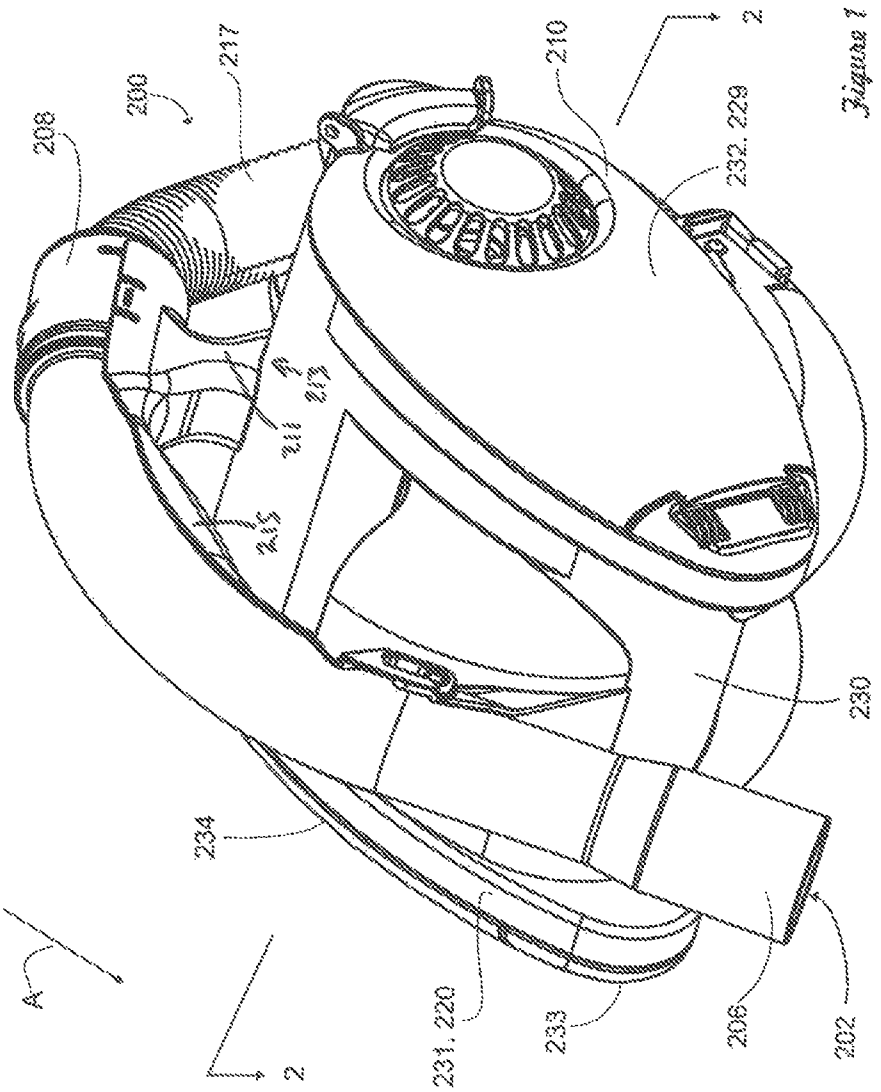
208
200
217
210
2
232, 229
215
211
213
230
234
A
2
231, 220
233
206
202

Figure 1

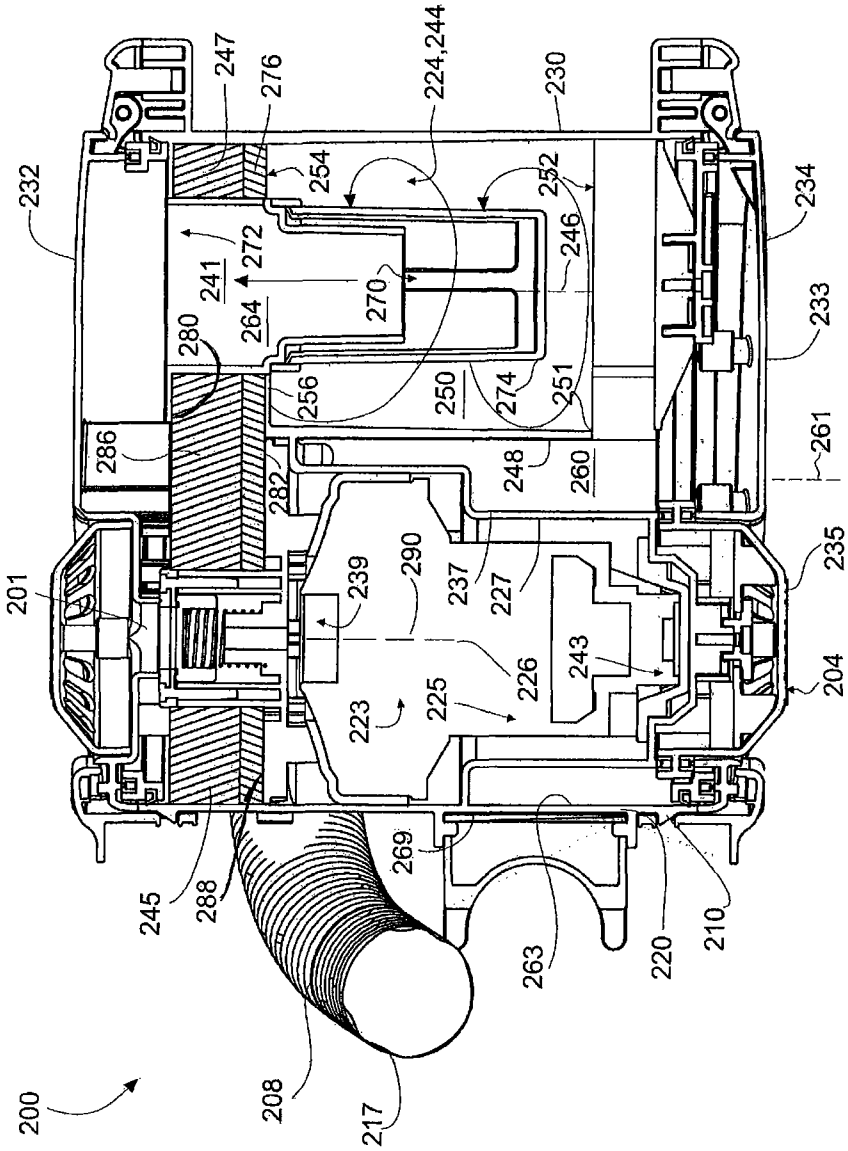
200
201
204
208
210
217
220
223
225
226
227
232
233
234
235
237
239
241
243
245
246
247
248
250
251
252
254
256
260
261
263
264
269
270
272
274
276
280
282
286
288
290
224,244
230

Figure 2

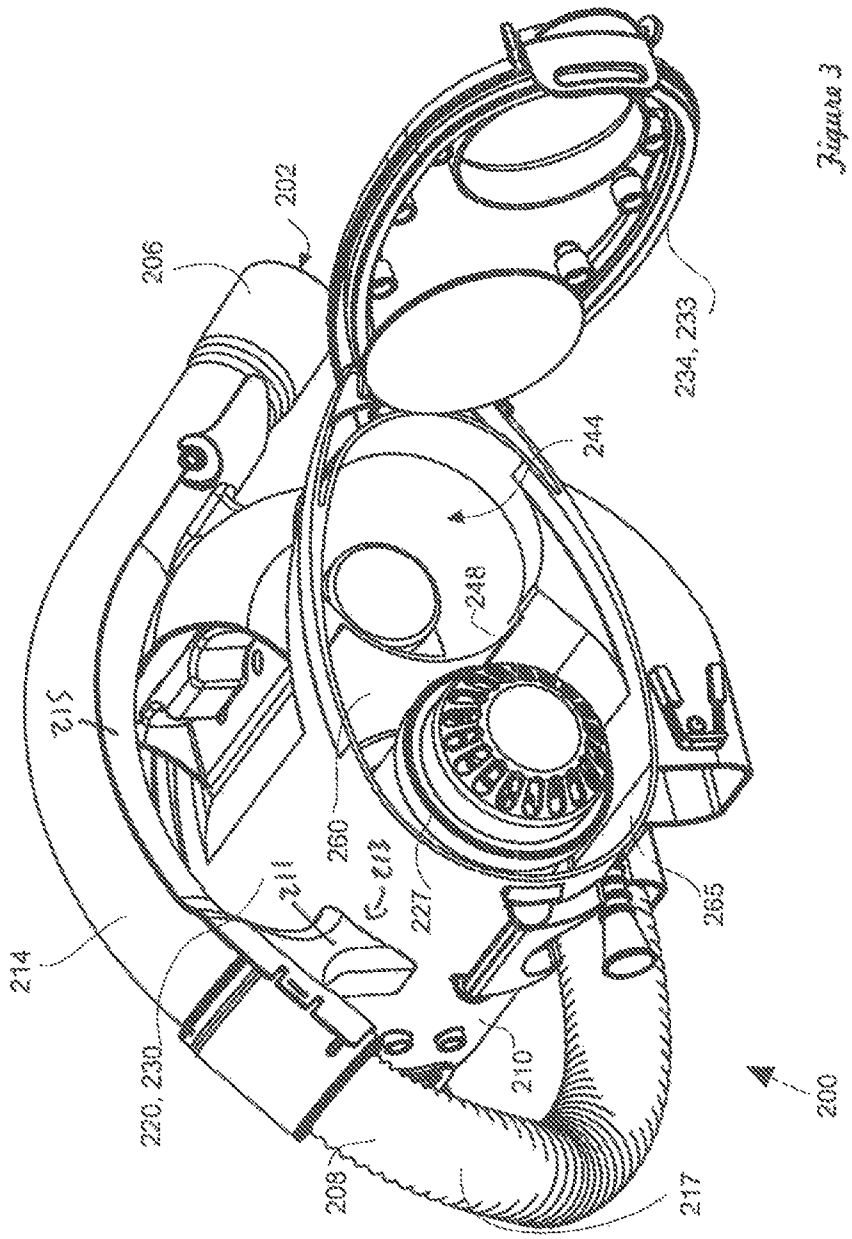
202
206
234, 233
244
248
215
260
211
213
227
265
214
220, 230
210
200
208
217

Figure 3

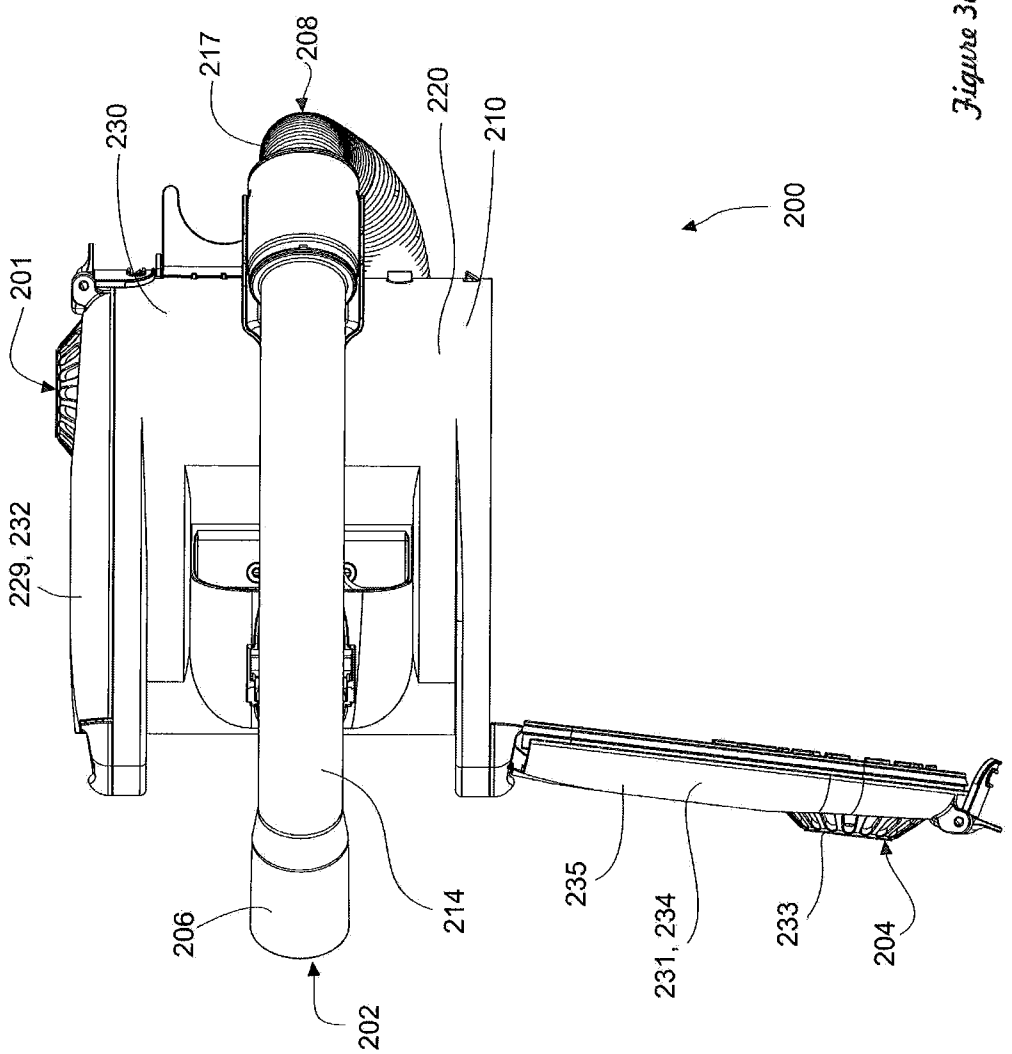
200
201
202
204
206
208
210
214
217
220
229, 232
230
231, 234
233
235

Figure 3A

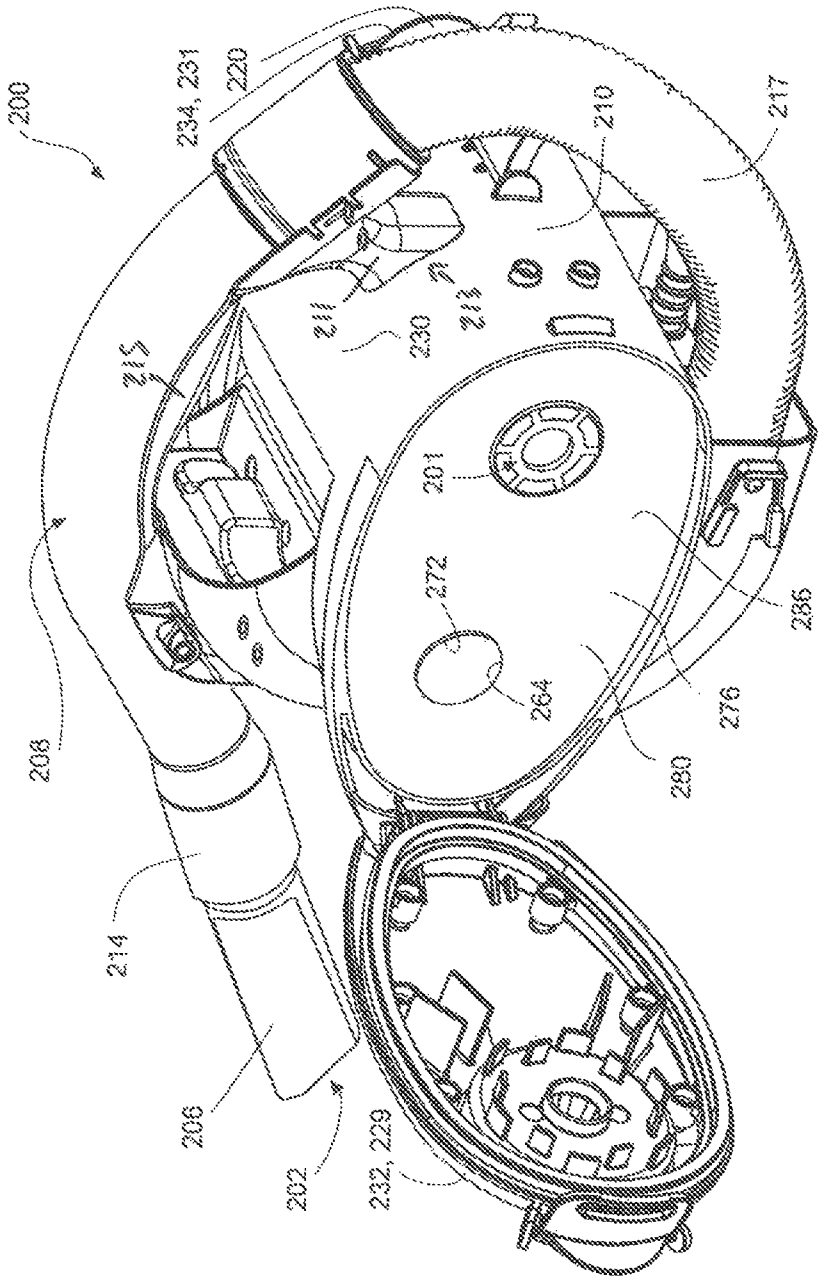
200
234, 231
220
210
217
211
230
213
215
201
272
264
286
276
280
208
214
206
202
232, 229

Figure 3B

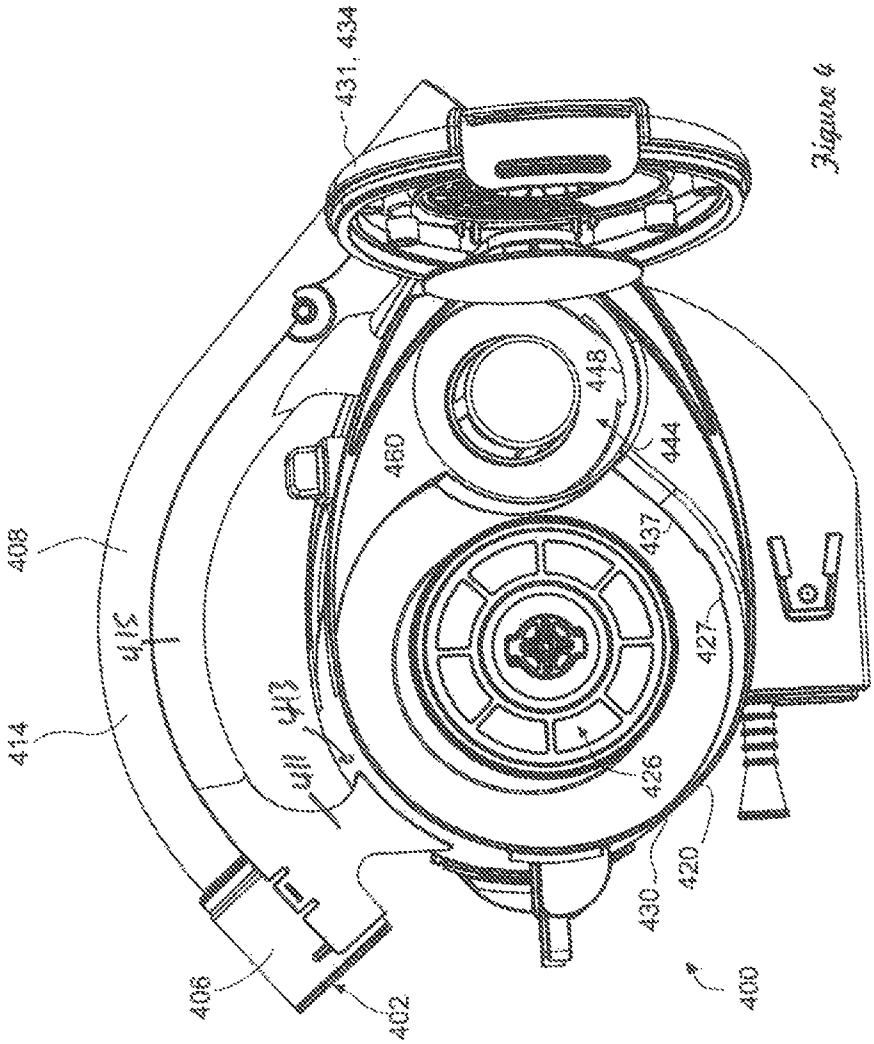
431, 434
408
414
415
413
411
460
448
444
437
427
426
420
430
406
402
400

Figure 4

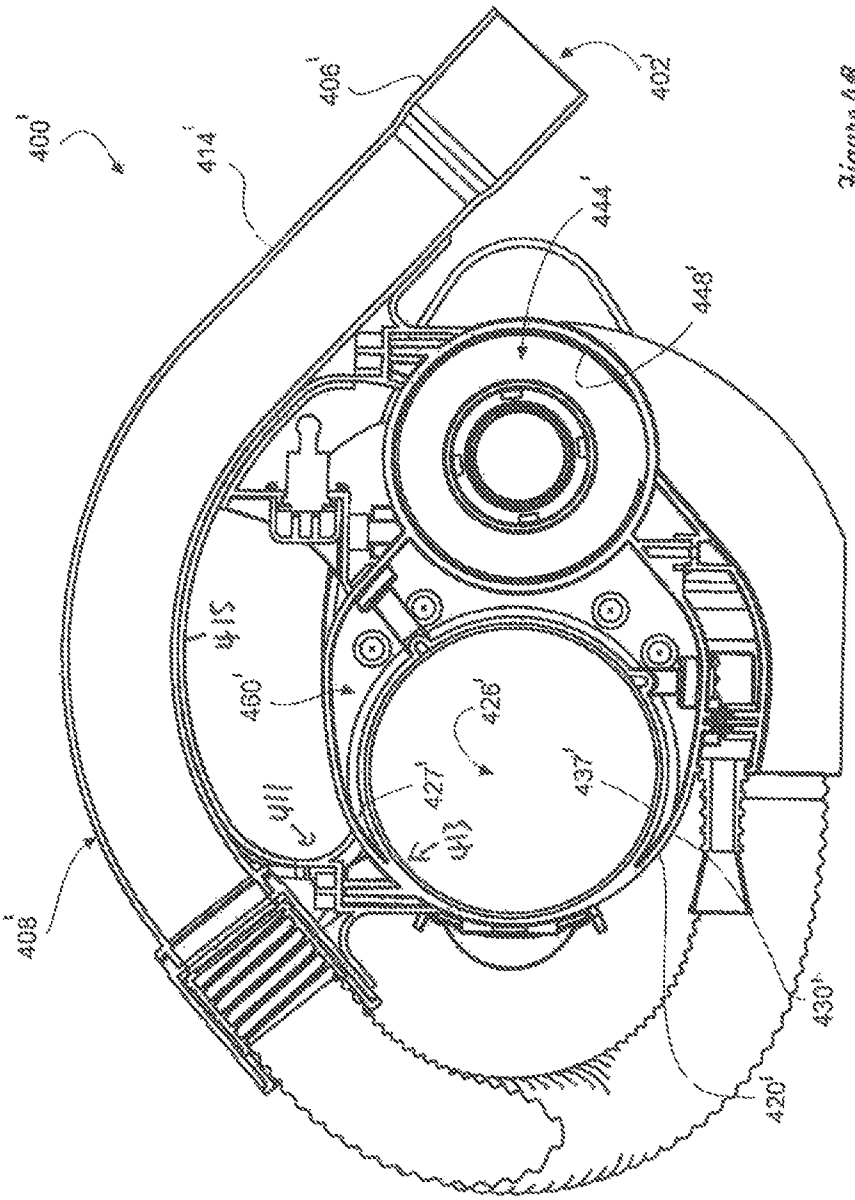

Figure 4B

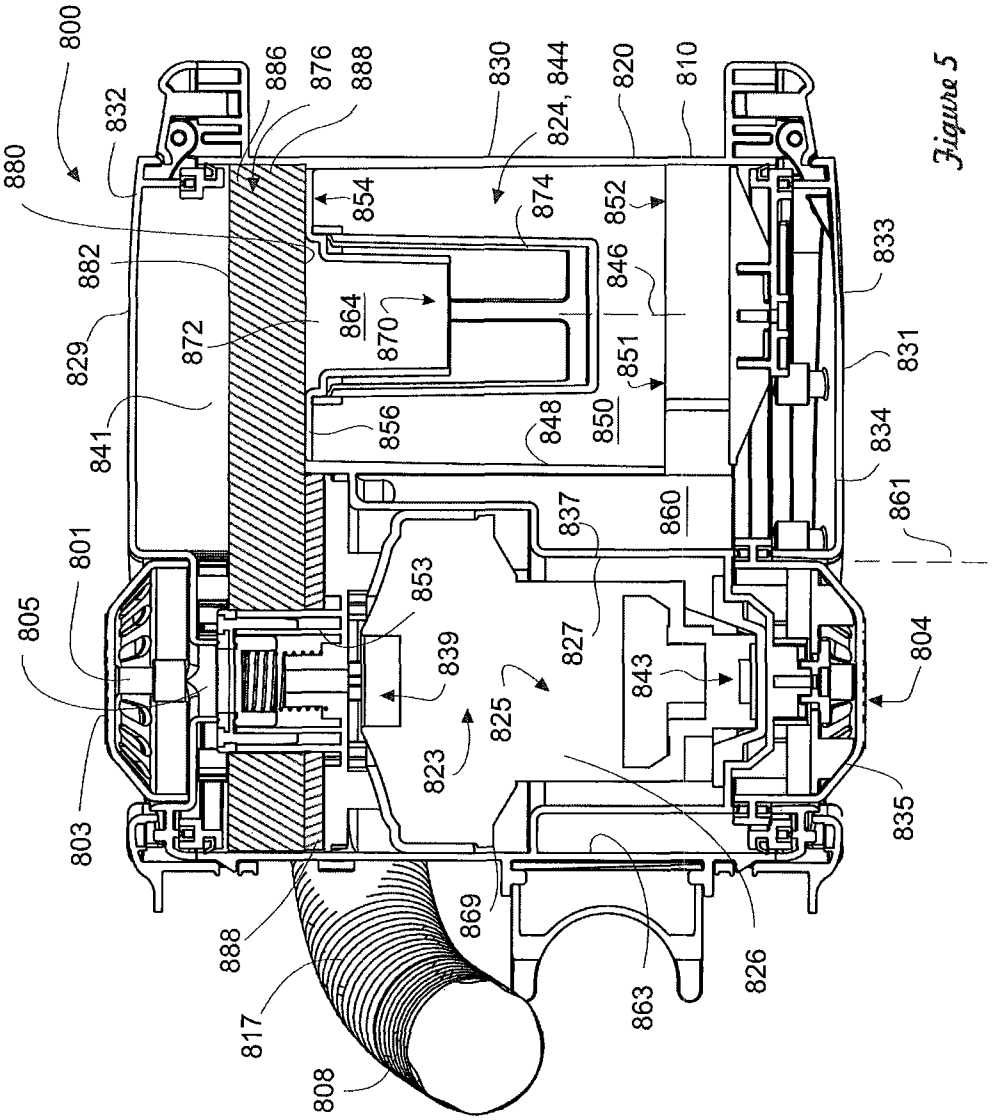
800
880
832
886
876
888
830
824, 844
820
810
854
874
852
882
846
833
829
872
864
870
851
831
841
856
848
850
834
837
860
861
801
853
805
839
827
843
804
825
823
803
835
888
869
863
826
817
808

Figure 5

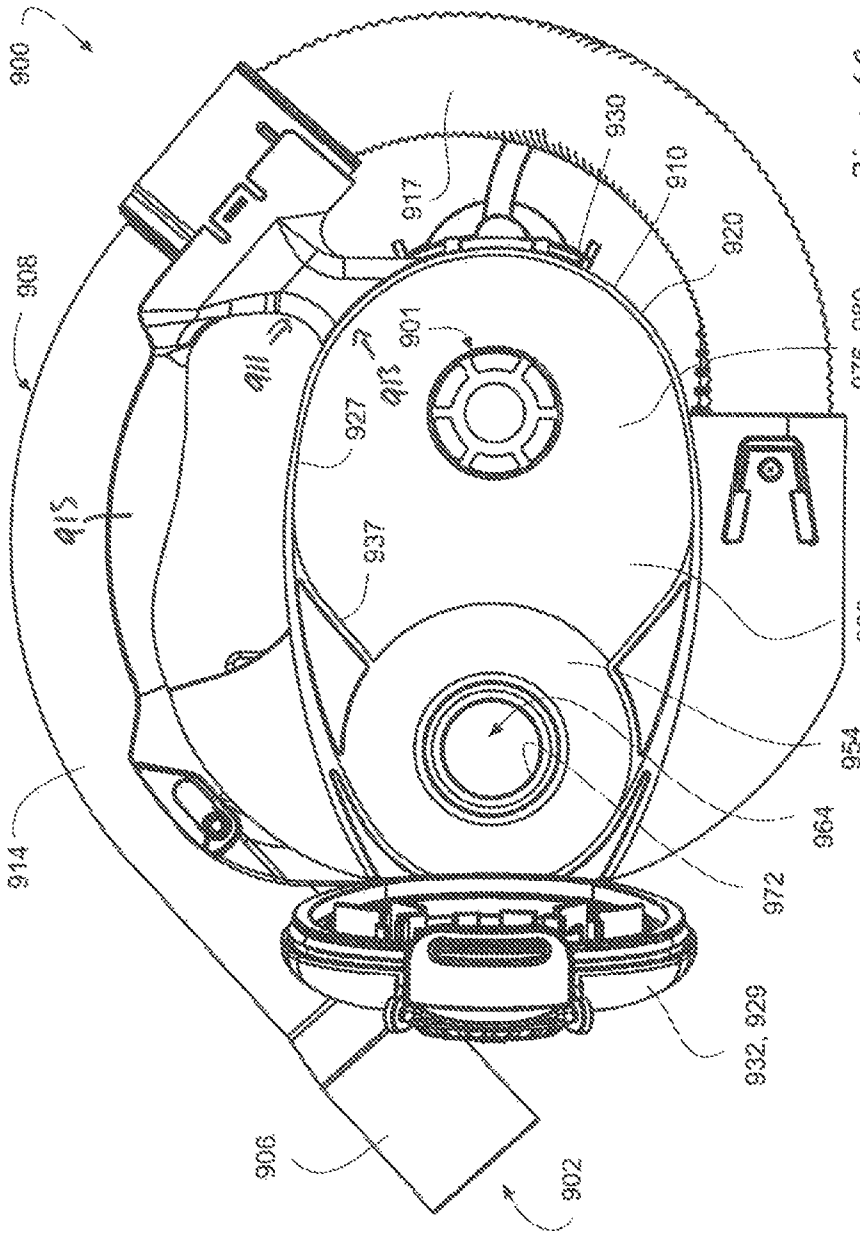
900
908
914
906
902
932, 929
972
964
954
986
976, 980
920
910
930
917
901
927
937
911
915

Figure 6A

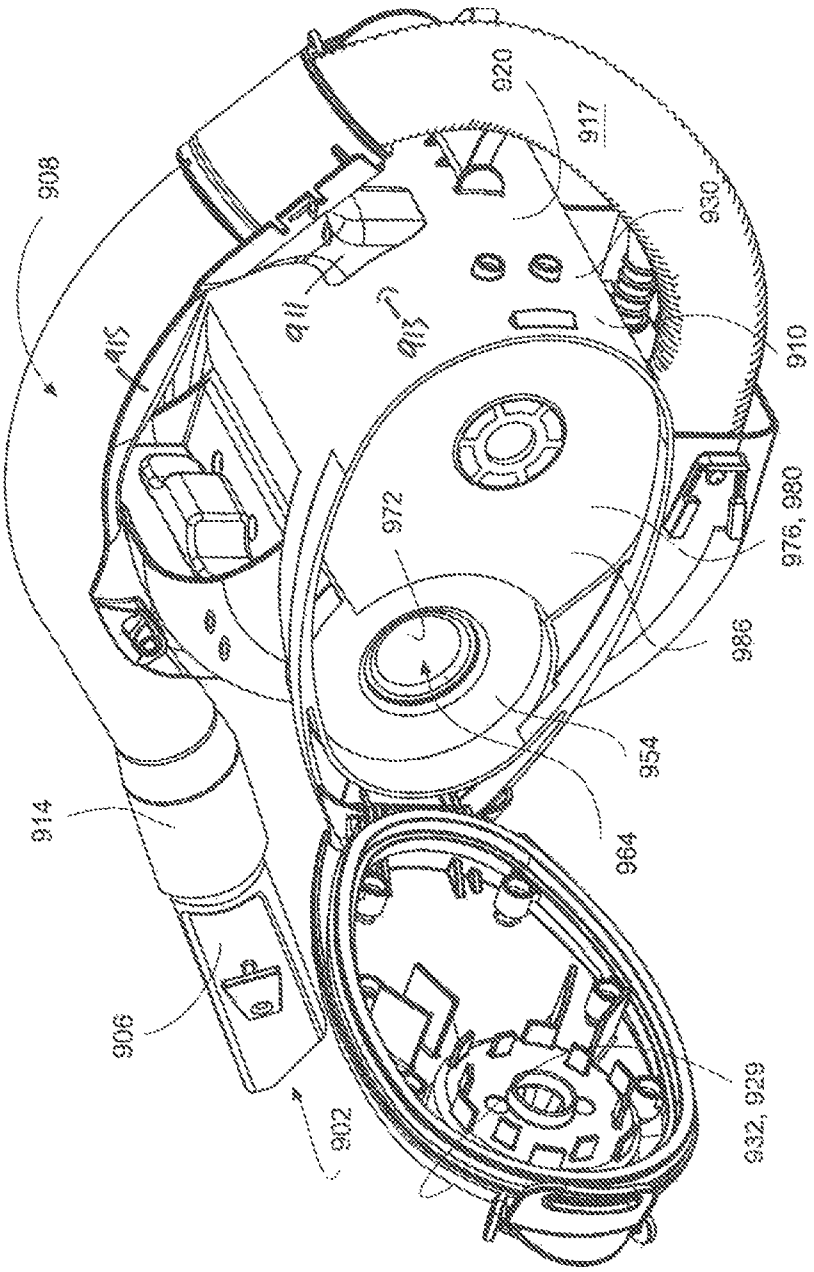
908
920
917
930
911
913
915
910
972
976, 980
986
954
964
914
906
902
932, 929

Figure 6B

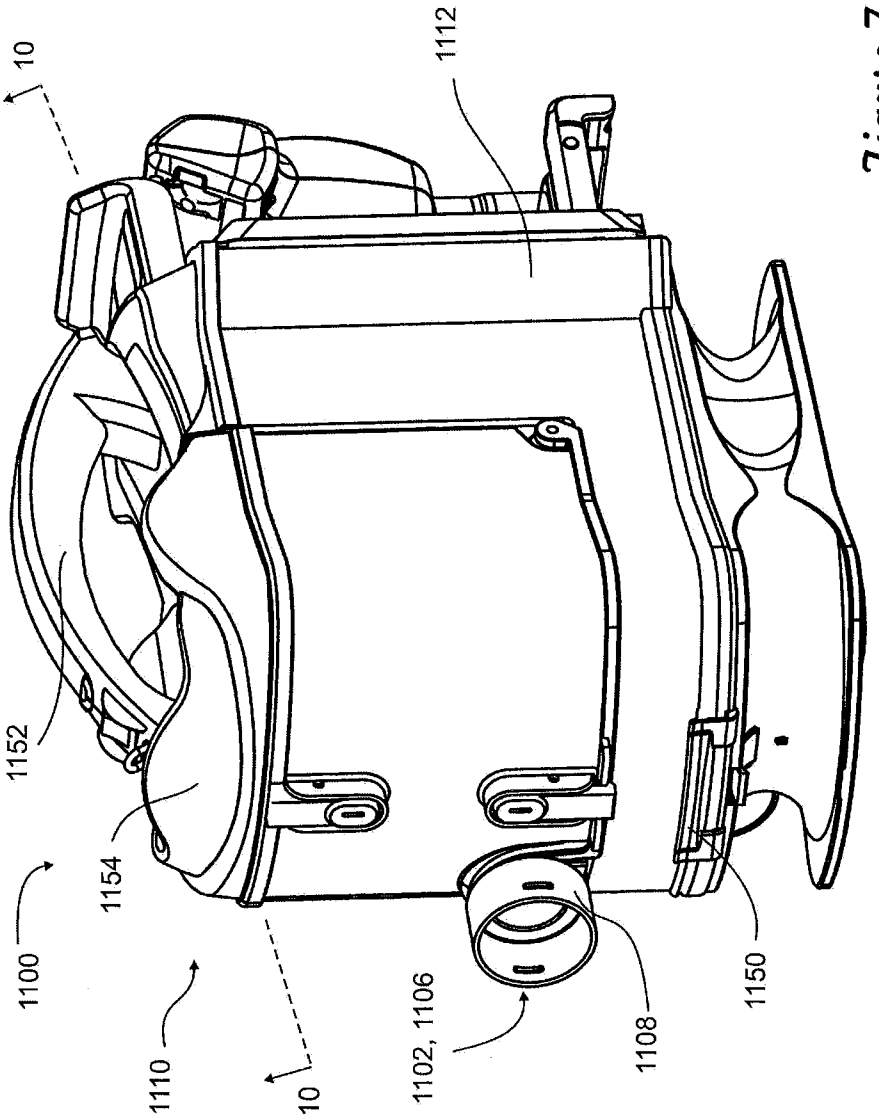

Figure 7

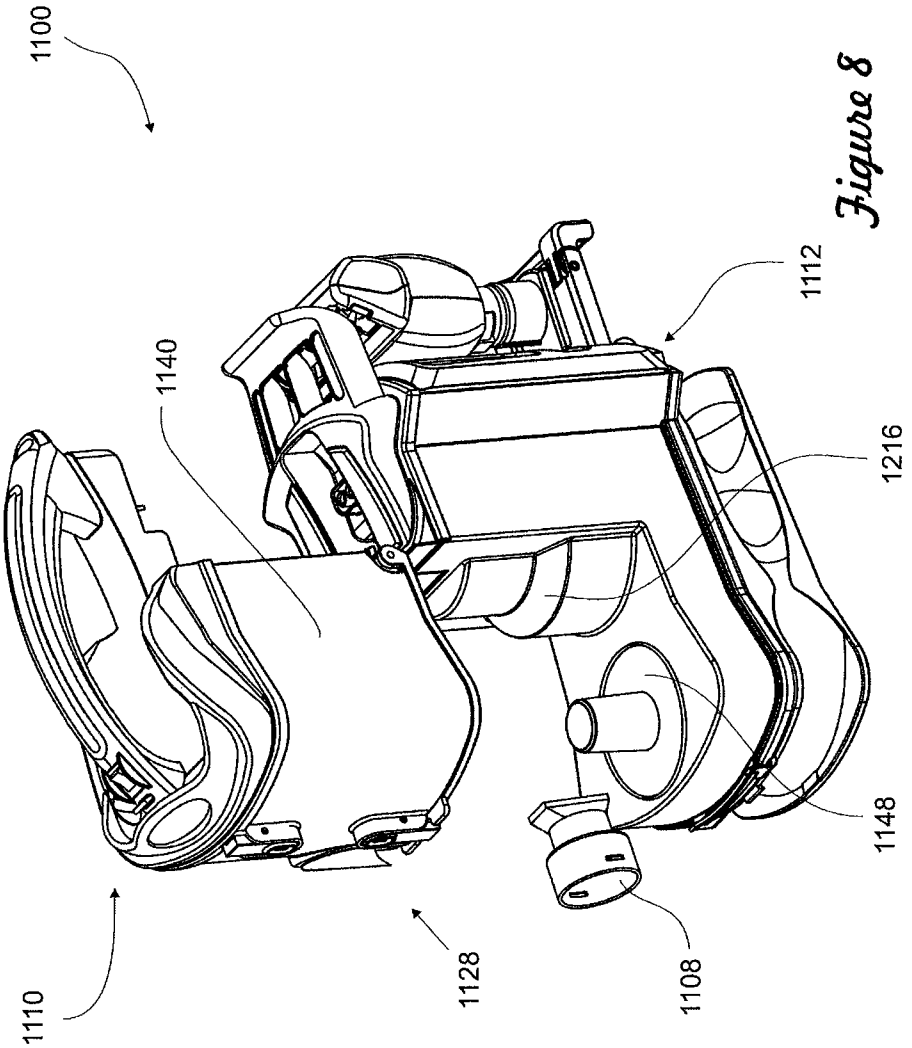

Figure 8

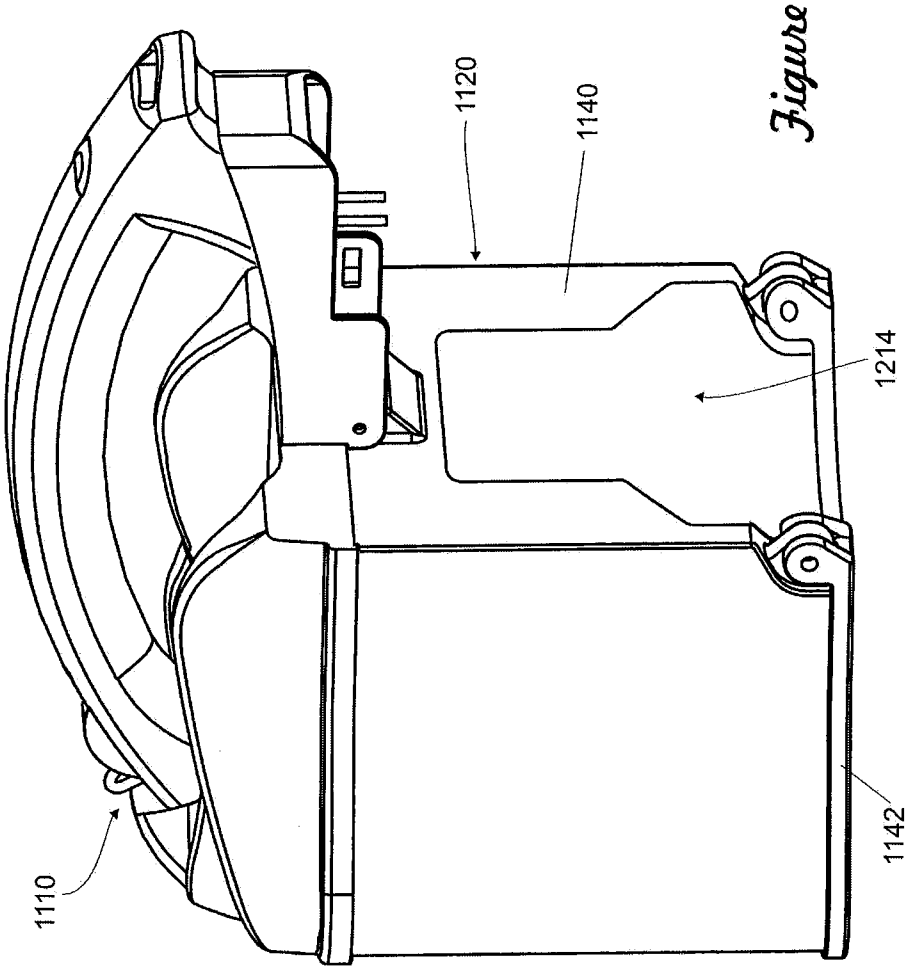

Figure 9

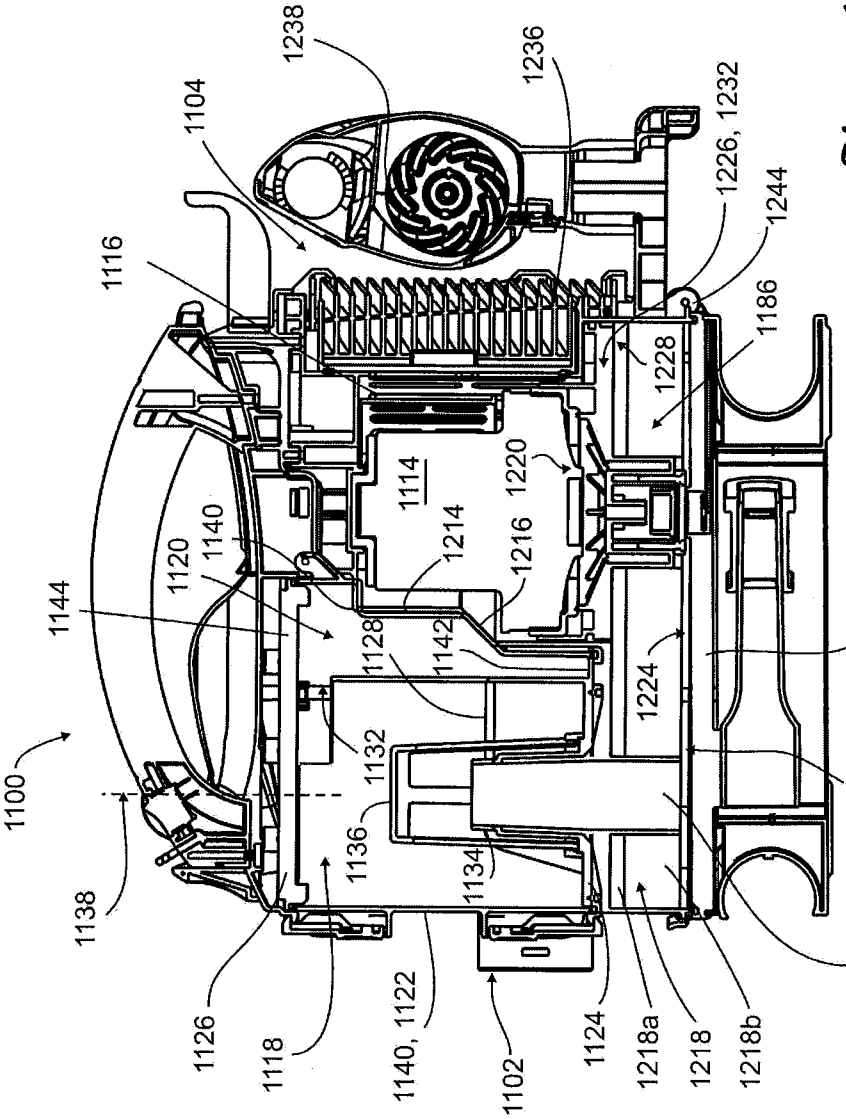
1100
1102
1104
1114
1116
1118
1120
1122
1124
1126
1128
1132
1134
1136
1138
1140
1142
1144
1214
1216
1218
1218a
1218b
1220
1222
1224
1226, 1232
1228
1230
1236
1238
1244
1186

Figure 10

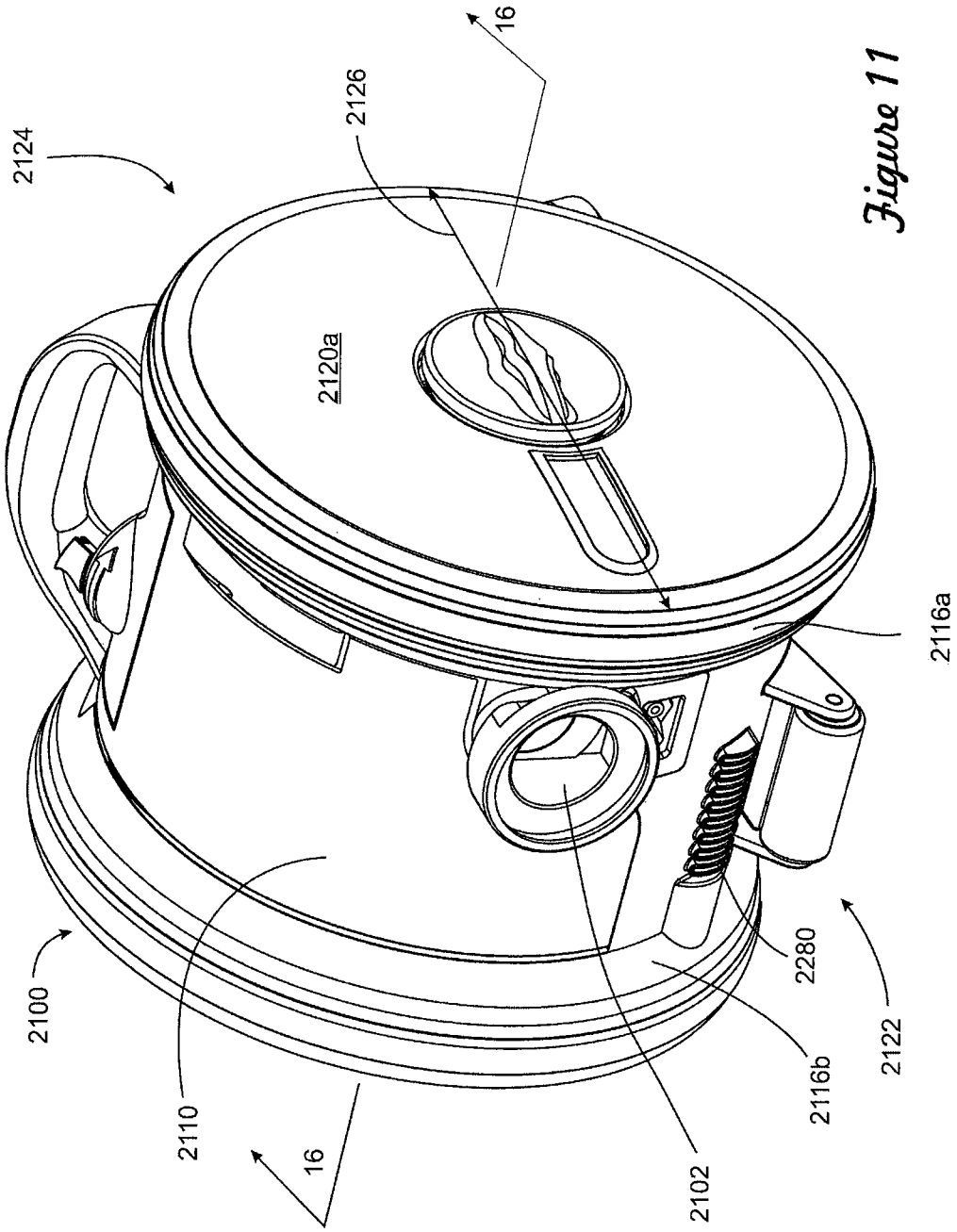

Figure 11

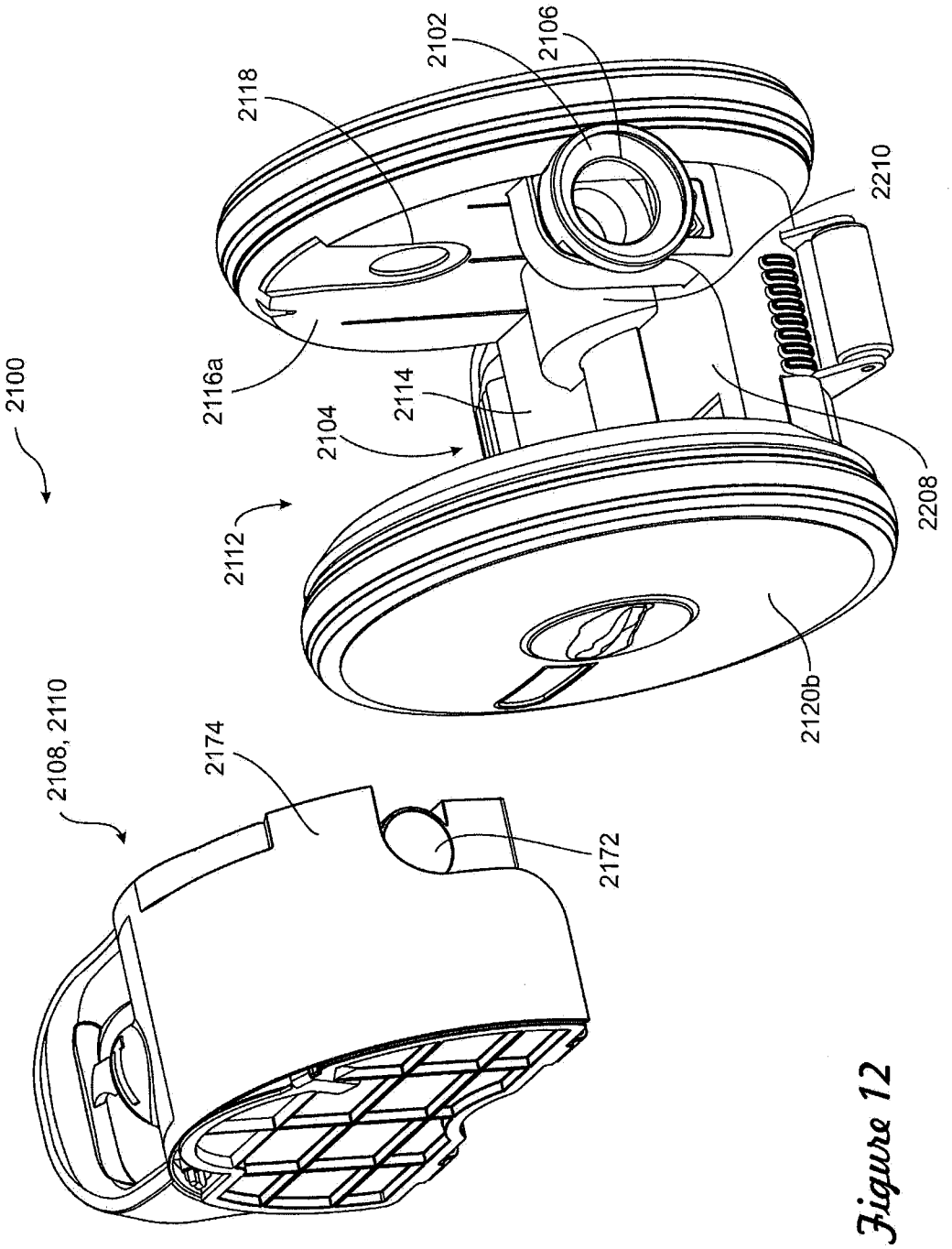
2100
2108, 2110
2174
2172
2112
2104
2114
2116a
2118
2102
2106
2120b
2208
2210

Figure 12

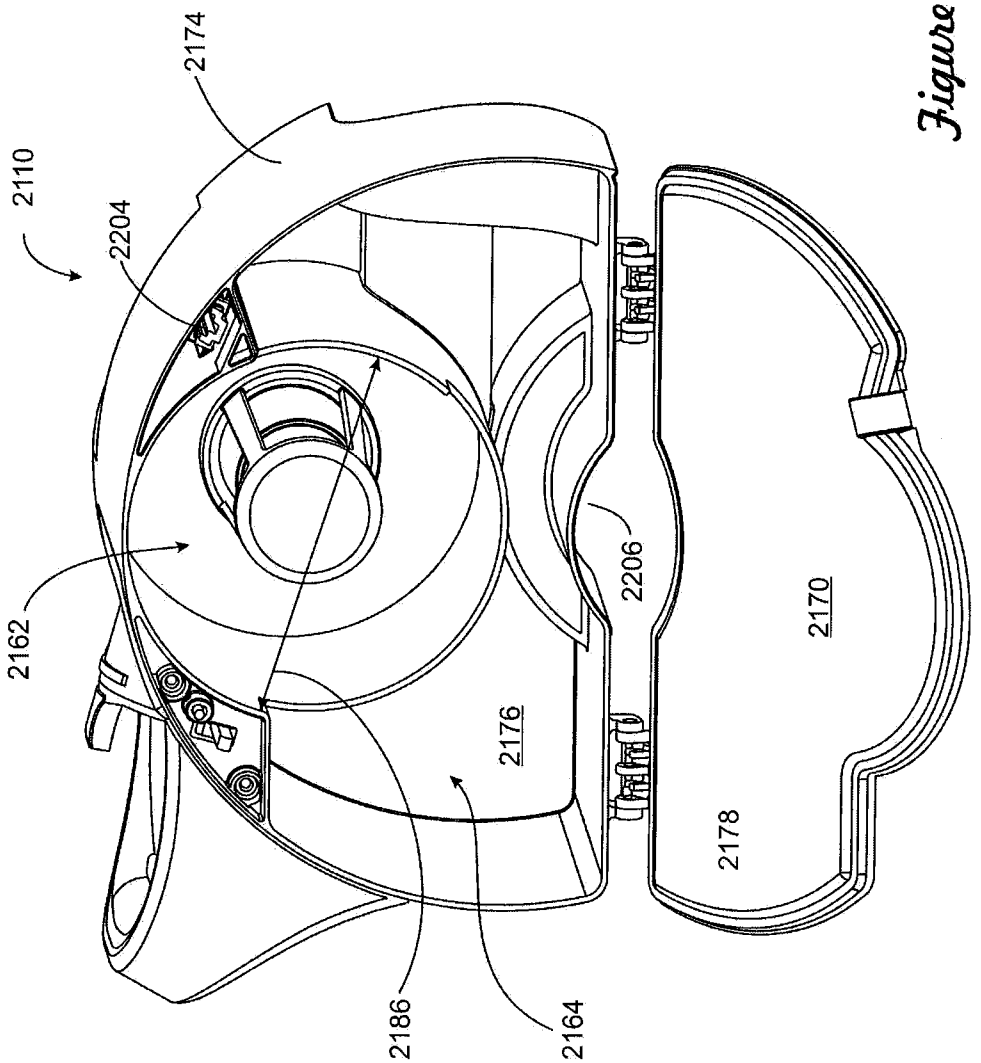

Figure 13

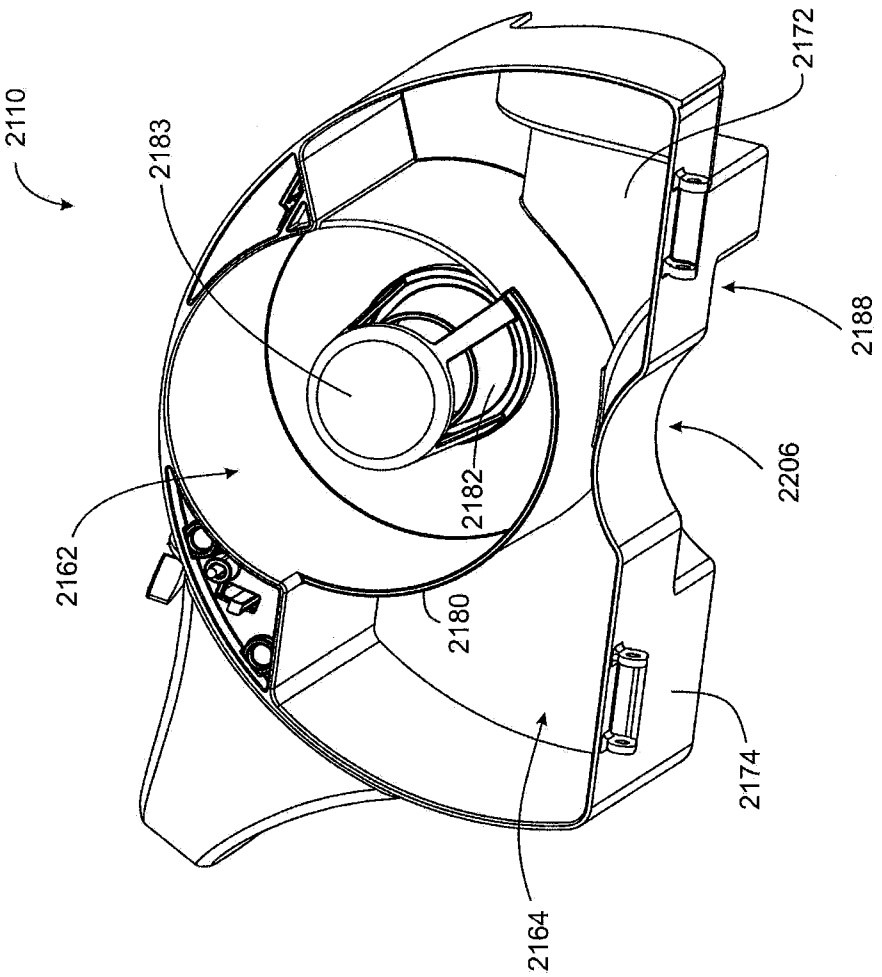

Figure 14

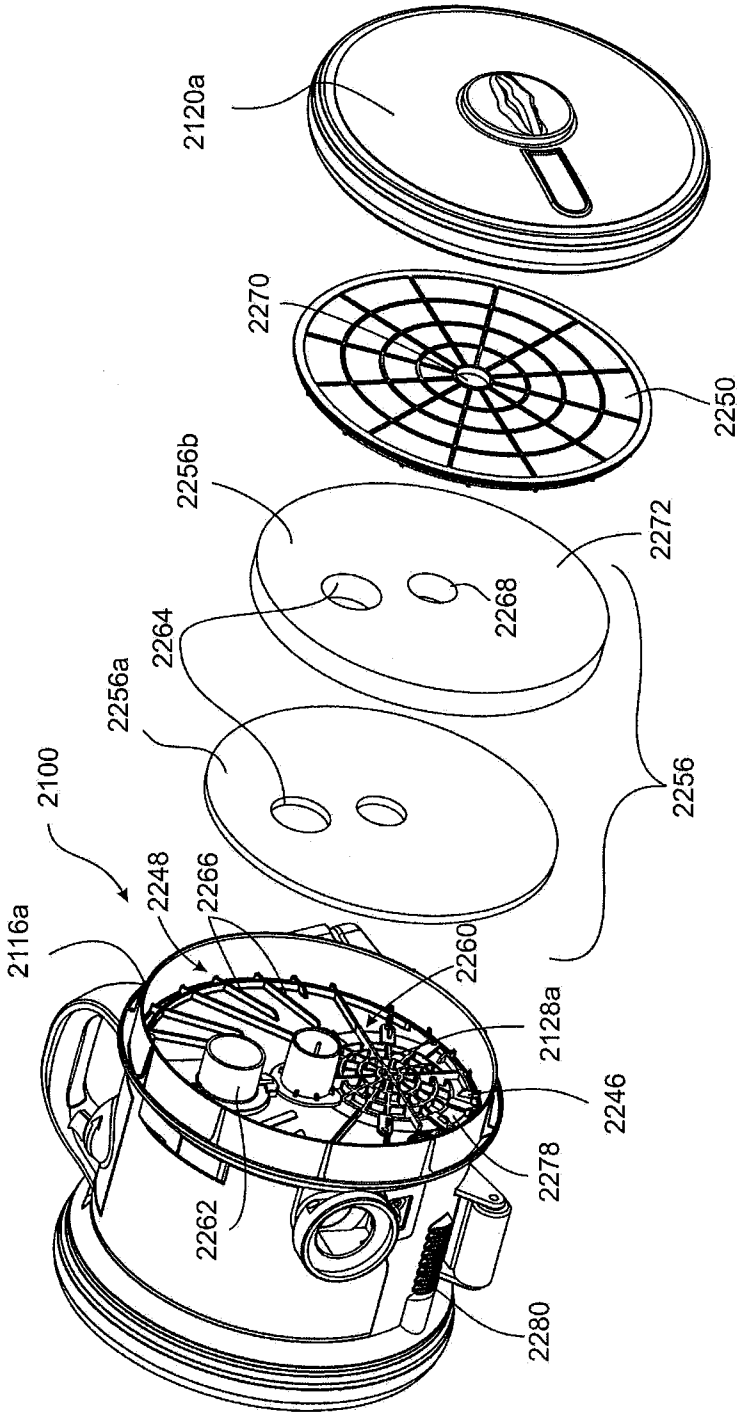
2120a
2270
2250
2256b
2272
2268
2264
2256a
2256
2100
2248
2266
2116a
2260
2128a
2246
2278
2262
2280

Figure 15

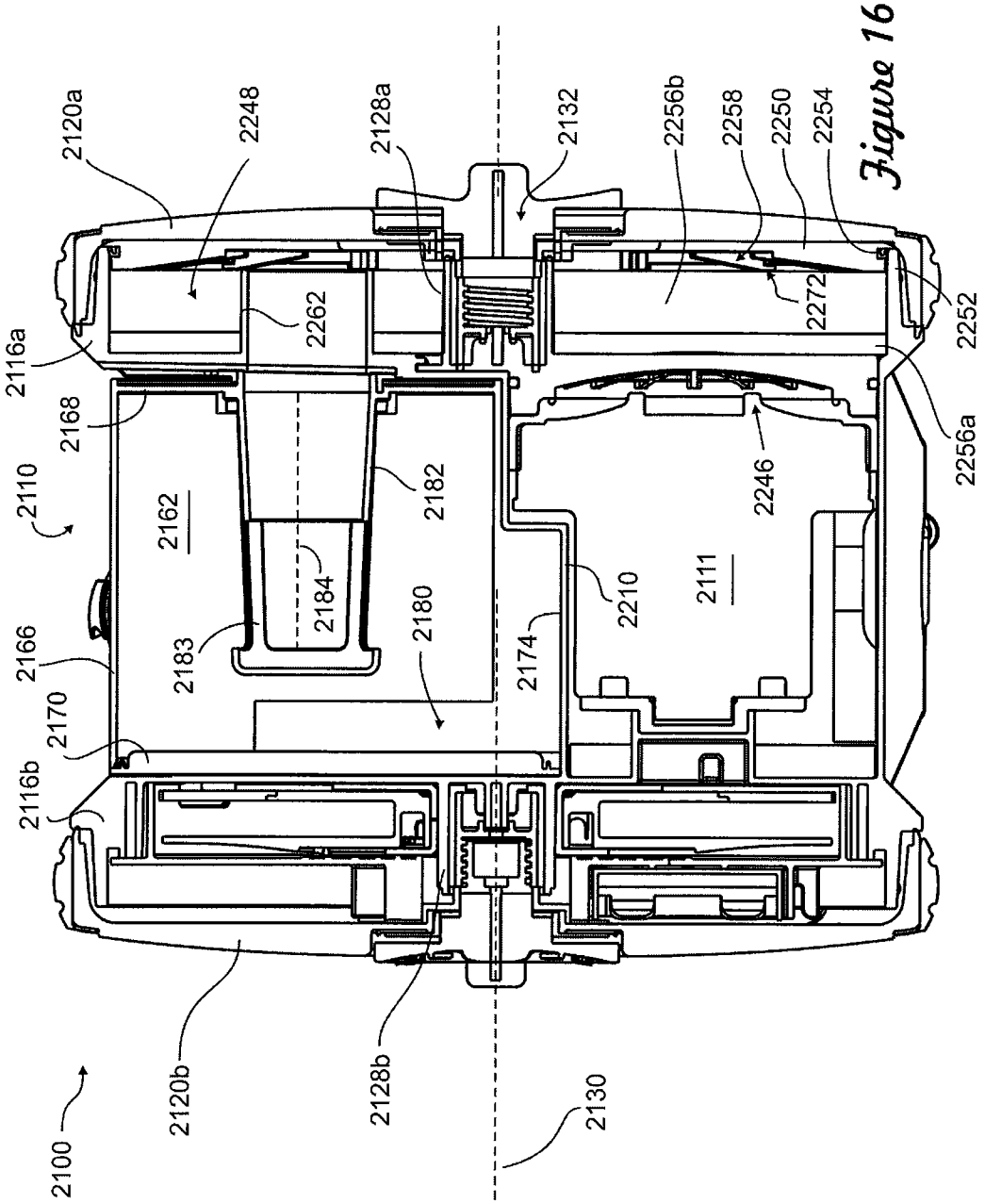
2120a
2248
2128a
2132
2256b
2258
2250
2254
2116a
2262
2272
2252
2168
2256a
2110
2162
2182
2246
2184
2210
2111
2166
2183
2180
2174
2170
2116b
2120b
2128b
2130
2100

Figure 16

HAND CARRIABLE SURFACE CLEANING APPARATUS

CROSS-REFERENCE TO RELATED APPLICATIONS

This application is a continuation of U.S. patent application Ser. No. 14/994,495, filed on Jan. 13, 2016, which is a continuation of U.S. patent application Ser. No. 13/039,376, filed on Mar. 3, 2011, now U.S. Pat. No. 9,265,395, and which is a continuation in part of U.S. patent application Ser. No. 12/722,705, filed Mar. 12, 2010, now U.S. Pat. No. 8,578,555, the entirety of each of which is incorporated herein by reference.

FIELD OF INVENTION

The disclosure relates to surface cleaning apparatuses, such as vacuum cleaners.

INTRODUCTION

The following is not an admission that anything discussed below is prior art or part of the common general knowledge of persons skilled in the art.

Various constructions for surface cleaning apparatus such as vacuum cleaners are known. Currently, many surface cleaning apparatus are constructed using at least one cyclonic cleaning stage. The air is drawn into the vacuum cleaner through a dirty air inlet and conveyed to a cyclone inlet. The rotation of the air in the cyclone chamber results in some of the particulate matter in the airflow stream being disentrained from the airflow stream. This material is then collected in a dirt collection chamber, which may be at the bottom of the cyclone chamber or in a dirt collection chamber exterior to the cyclone chamber (see for example WO2009/026709 and U.S. Pat. No. 5,078,761). One or more additional cyclonic cleaning stages and/or filters may be positioned downstream from the cyclone chamber.

SUMMARY

The following summary is provided to introduce the reader to the more detailed discussion to follow. The summary is not intended to limit or define the claims.

According to one aspect, a hand surface cleaning apparatus is provided that may be operable for an enhanced period of time without a significant reduction is air flow into the dirty air inlet. In accordance with this aspect, a pre-motor filter with enhanced surface area transverse to the direction of air flow is provided.

Typically, a surface cleaning apparatus such as a hand vacuum cleaner has a pre-motor filter and a post motor filter. The post motor filter may be a HEPA filter. In such a case, the air discharged from the clean air outlet of the unit may be comparable to that discharged from a full size vacuum cleaner. As the HEPA filter is used, the air flow through the unit will decrease and the suction provided by the unit will decrease. This can impact upon the cleaning performance achieved by the vacuum cleaner. To counter this, a larger suction motor may be provided. However, that would increase the hand weight of the unit. A pre-motor filter reduces the level of entrained dirt that will reach the HEPA filter. However, the filter will become clogged with use. Increasing the surface area of the upstream side of the pre-motor filter extends the lifetime of the pre-motor filter and may therefore enhance the life of a post motor filter.

The pre-motor filter may have an enhanced surface area of its upstream side by configuring the pre-motor filter to have a larger upstream surface area then that of the suction motor inlet end. A pre-motor filter may be positioned in the suction motor casing and may therefore have a diameter that is about the same as the diameter of the fan of the suction motor. By configuring the pre-motor filter to overlie part of one or more additional components of the unit, the surface area of the upstream side is increased.

For example, a suction motor may be positioned beside a cyclone chamber and extend in the same direction of the cyclone chamber. Accordingly, one end of a cyclone chamber may be adjacent the inlet end of the suction motor (e.g., positioned in about the same plane). The pre-motor filter (preferably a foam filter and more preferably a foam filter with a felt filter downstream thereof) may be configured to overlie part or all of the cyclone chamber as well as part or all of the suction motor. Alternately, or in addition, the pre-motor filter may overlie part of the open volume between the suction motor and the cyclone chamber. If the dirt collection chamber is exterior to the cyclone chamber, e.g., it is positioned to occupy some of the open volume, then the pre-motor filter may alternately or in addition overlie part or all of the dirt collection chamber. Accordingly, a pre-motor filter with an enhanced surface area of the upstream side may be provided without substantially increasing the size of the unit. A filter with an enhanced size may be provided by providing a filter that overlies part or all of two or more of the suction motor, the dirt collection chamber and the cyclone chamber.

According to this aspect, a surface cleaning apparatus is provided. The hand surface cleaning apparatus comprises an air flow passage extending from a dirty air inlet to a clean air outlet. A suction motor is positioned in the air flow path and has an inlet end and an outlet end. At least one cyclone chamber is positioned in the air flow path and has an associated dirt collection chamber, a cyclone air inlet and a cyclone air outlet. A pre-motor filter is positioned downstream of the cyclone chamber and upstream of the suction motor. The pre-motor filter has an upstream side and a downstream side. The pre-motor filter overlies at least a portion of the suction motor and the cyclone chamber.

The cyclone chamber and the suction motor may be positioned side by side and may have generally parallel longitudinal axes.

The pre-motor filter may overlie at least half of the suction motor and the cyclone chamber. The pre-motor filter may overlie at least 75% of the suction motor and the cyclone chamber.

The pre-motor filter may have a portion that is centered over the suction motor and a portion that overlies at least half of the cyclone chamber.

The upstream side of the pre-motor filter may face the cyclone air outlet and an inlet duct of the suction motor may extend through the pre-motor filter to the downstream side of the pre-motor filter.

The cyclone air outlet may extend through the pre-motor filter to the upstream side of the pre-motor filter, and the inlet end of the suction motor may face the downstream side of the pre-motor filter.

The hand surface cleaning apparatus may further comprising an openable door positioned at a side of the hand vacuum cleaner having the cyclone air outlet and the inlet end of the suction motor. The upstream side of the pre-motor filter may be visible when the door is opened.

The pre-motor filter may be mounted to at least one of the cyclone chamber and the suction motor and the pre-motor filter may remain in position when the door is opened.

The pre-motor filter may be spaced from the door and a chamber may be provided between the pre-motor filter and the door.

BRIEF DESCRIPTION OF THE DRAWINGS

Reference is made in the detailed description to the accompanying drawings, in which:

FIG. **1** is a perspective illustration of an embodiment of a surface cleaning apparatus;

FIG. **2** is a cross section taken along line **2-2** in FIG. **1**;

FIG. **3** is a perspective illustration of the surface cleaning apparatus of FIG. **1**, showing a second openable door in an open configuration;

FIG. **3**A is a side plan view of the surface cleaning apparatus of FIG. **1**, showing a second openable door in an open configuration;

FIG. **3**B is a perspective illustration of the surface cleaning apparatus of FIG. **1** showing a first openable door in an open configuration;

FIG. **4** is a plan view of an alternate embodiment of a surface cleaning apparatus, showing a second openable door in an open configuration;

FIG. **4**B is a plan view of another alternate embodiment of a surface cleaning apparatus, showing a second openable door in an open configuration;

FIG. **5** is a cross section taken along the same line **2-2** through an alternate embodiment of a surface cleaning apparatus;

FIG. **6**A is a plan view of an alternate embodiment of a surface cleaning apparatus, showing a first openable door in an open configuration;

FIG. **6**B is a perspective illustration of the surface cleaning apparatus of FIG. **6**A;

FIG. **7** is a perspective illustration of an alternate embodiment of a surface cleaning apparatus;

FIG. **8** is a perspective illustration of the surface cleaning apparatus of FIG. **7**, with its cyclone bin assembly removed;

FIG. **9** is a perspective illustration of the cyclone bin assembly of FIG. **8**;

FIG. **10** is a section view taken along line **10-10** in FIG. **7**;

FIG. **11** is a perspective illustration of an alternate embodiment of a surface cleaning apparatus;

FIG. **12** is a perspective illustration of the surface cleaning apparatus of FIG. **11**, with its cyclone bin assembly removed;

FIG. **13** is a perspective illustration of the cyclone bin assembly of FIG. **12**, with one end wall in an open configuration;

FIG. **14** is a perspective illustration of the cyclone bin assembly of FIG. **13**, with the one end wall removed;

FIG. **15** is a partially exploded view of the surface cleaning apparatus of FIG. **11**; and

FIG. **16** is a section view taken along line **16-16** in FIG. **11**.

DETAILED DESCRIPTION

Referring to FIG. **1**, an embodiment of a surface cleaning apparatus **200** is shown. In this embodiment the surface cleaning apparatus **200** is a hand operable surface cleaning apparatus. The surface cleaning apparatus **200** is usable in a forward direction of motion, indicated by arrow A in FIG. **1**. A handle **215** is provided on an upper portion of the surface cleaning apparatus **200**. The handle **215** is configured to be grasped by a user, and can be used to manipulate the surface cleaning apparatus **200**. In the illustrated example, a first portion **211** of the handle **215** is connected to the surface cleaning apparatus **200** at a first location **213**.

Referring to FIG. **2**, the surface cleaning apparatus **200** has a dirty air inlet **202**, a clean air outlet **204** (shown in FIG. **2**), and an air flow passage extending therebetween. In the embodiment shown, the dirty air inlet **202** is provided in a nozzle **206**. From the dirty air inlet **202**, the airflow passage extends through the nozzle **206**, and through an air conduit **208**, to a suction and filtration unit **210**. The clean air outlet **204** is provided in the suction and filtration unit **110**. In the embodiment shown, the air conduit **108** includes a wand **214**, and a hose **217**.

Referring now to FIGS. **1** and **2**, the suction and filtration unit **210** includes a main housing **220**. A filtration member **224** is provided in the main housing **220**, and the filtration member **224** is positioned in the airflow passage downstream of the dirty air inlet **202**, for removing particulate matter from air flowing through the airflow passage.

A suction motor **226** is also provided in the main housing **220**, downstream of the filtration member **224**, for drawing air through the airflow passage. The suction motor **226** may be any suitable type of suction motor. In the embodiment shown, the suction motor **226** includes a fan **223**, and a motor **225**.

In the embodiment shown, the filtration member **224** and suction motor **226** are positioned side-by-side. Further, the filtration member **224** extends along an axis **246**, and the suction motor extends along an axis **290**, and the axes **246**, **290** are generally parallel. Further, the filtration member **224** and suction motor **226** are each positioned transverse to the forward direction of motion (indicated by arrow A in FIG. **1**) of the hand surface cleaning apparatus **100**.

Referring to FIG. **1**, in the embodiment shown, the main housing **220** includes a central wall **230**, a first side wall **232**, and a second side wall **234**. The first side wall **232** is pivotally mounted to the central wall **230**, and serves as a first openable door **229**. The second sidewall **234** has a first portion **233** adjacent the filtration member **224**, and a second portion **235** adjacent the suction motor **226**. The second sidewall **234** is pivotally mounted to the central wall **230**, and serves as a second openable door **231**. Further, the second portion **235** is removable from the first portion **233**.

Referring to FIG. **2**, an interior wall **237** extends within the main housing **220** to separate the suction motor **226** from the filtration member **224**, so that fluid communication between the filtration member **224** and the suction motor **226** may generally only occur between a filtration member air outlet **264**, and a suction motor air inlet end **239**, as will be described in further detail hereinbelow. The interior wall **237** generally surrounds the suction motor **226** to form a motor housing **227**, and is integral with the central wall **230**, so that a portion **269** of the motor housing **227** forms part of the housing **220**.

Referring to FIG. **2**, in the embodiment shown, the filtration member **224** is a cyclone **244**. In alternate embodiments, the filtration member **224** may be, for example, a filter, such as a filter bag or a foam filter. In further alternate embodiments, the filtration member **224** may include a plurality of cyclone chambers, or a plurality of cyclonic stages.

The cyclone **244** may be of any suitable configuration. The cyclone **244** includes a cyclone wall **248** (also referred to as an outer wall **248**), which is integral with the central

wall **230**, and together with the central wall **230** defines a cyclone chamber **250**. That is, a portion of the cyclone wall **248** forms part of the housing **220**. A first end **251** of the cyclone wall **148**, which is positioned towards the second sidewall **234**, defines an opening **252**, and an opposed second end **254** of the cyclone wall includes a second end wall **256**. The cyclone wall **248** is positioned in the main housing **220** such that it is spaced from the second sidewall **234**.

The open first end **252** of the cyclone serves as a dirt outlet for the cyclone **244**. Material that is separated form air in the cyclone travels from the dirt outlet to an associated dirt collection chamber **260**.

Referring to FIGS. **2** and **3**, at least a portion of the dirt chamber **260** is preferably positioned in an open volume within the main housing **220**. In the embodiment shown, the entire dirt chamber **260** is within an open volume within the main housing **220**. The dirt collection chamber **260** is preferably within the main housing **220**, exterior to the cyclone **244** and the suction motor **226**. The dirt collection chamber extends along a longitudinal axis **261**. The longitudinal axis **261** is preferably parallel to the suction motor axis **290**.

Referring to FIGS. **2** and **3**, at least a portion of the dirt collection chamber **260** is preferably positioned between the cyclone **244** and the suction motor **226**. More preferably, at least a portion of the dirt collection chamber **260** surrounds at least a portion of the suction motor **226** and the suction motor housing **227**. For example, the dirt collection chamber **260** may surround all of the suction motor **226**, or only a portion of the suction motor **226**, and/or all of the suction motor housing **227**, or only a portion of the suction motor housing **227**. As seen most clearly in FIG. **3**, in the embodiment shown, the dirt collection chamber **260** fully surround the motor **225** of suction motor **226** and the portion suction motor housing **227** that houses the motor **225**.

The dirt collection chamber **260** further preferably surrounds at least a portion of the cyclone. For example, in the embodiment shown, dirt collection chamber **260** extends around approximately one quarter of the cyclone **244**. In alternate embodiments, the dirt collection chamber **260** may fully surround the cyclone **244**.

In an alternate embodiment of a surface cleaning apparatus **400** shown in FIG. **4**, wherein like reference numerals are used to refer to like features as in FIGS. **1** to **3**, with the first digit incremented to 4, the dirt collection chamber **460** partially surrounds the motor **425** of suction motor **426** and the portion suction motor housing **427** that houses the motor **425**. Further, the dirt collection chamber **460** partially surrounds the cyclone **444**. Particularly, the dirt collection chamber **460** surrounds approximately three quarters of the cyclone **444**. In another alternate embodiment of a surface cleaning apparatus **400'** shown in FIG. **5**, wherein like reference numerals are used to refer to like features as in FIG. **4**, with a prime (') after the reference number, similarly to the embodiment of FIG. **4**, the dirt collection chamber **460'** partially surrounds the motor **425'** of suction motor **426'** and the portion suction motor housing **427'** that houses the motor **425'**. Further, the dirt collection chamber **460'** partially surrounds the cyclone **444'**. Particularly, the dirt collection chamber **460'** surrounds approximately one quarter of the cyclone **444'**.

Referring to FIG. **3**, the dirt collection chamber **260** has an outer wall **263**, and a portion **265** of the outer wall **263** preferably forms part of the main housing **220**.

The cyclone **244** further includes a cyclone air inlet (not shown), and a cyclone air outlet **264**. The cyclone air inlet extends from a first end that is in communication with the hose **217** through the central wall **230** of the filtration member main housing **220**, to a second end that is in communication with the cyclone chamber **250**. The cyclone air outlet **264** extends along the axis **246**, from a first end **270** that is positioned within the cyclone chamber **250**, through the lower wall **156**, and to a second end **272** (also referred to herein as an outlet **272** of the cyclone air outlet **264**) that is in communication with a chamber **241** adjacent the first sidewall **232** of the suction and filtration unit **210**. A screen **274** is preferably mounted over the first end **270** of the cyclone air outlet.

In use, air flows from the hose **217** into the cyclone chamber **250** through the cyclone air inlet. In the cyclone chamber **250**, the air flows within the cyclone wall **248** in a cyclonic pattern, and particulate matter is separated from the air. The particulate matter exits the cyclone chamber **250** through the open first end **252**, and settles in the dirt collection chamber **260**. The air exits the cyclone chamber **250** through the cyclone air outlet **264**, and enters the chamber **241**

The dirt collection chamber **260** may be emptied in any suitable manner. Referring to FIG. **3**A, in the embodiment shown, the second side wall **234** is pivotally openable, so that the dirt collection chamber **260** may be opened.

Referring still to FIG. **2**, the surface cleaning apparatus includes a pre-motor filter **276** positioned downstream of the cyclone **244** and upstream of the suction motor **226**. The pre-motor filter **276** is preferably housed in the chamber **241**, is snugly received within the central wall **230**, overlies the suction motor **226** and the cyclone **244**, and spaced from the first openable door **229**. In the embodiment shown, the pre-motor filter **276** overlies the all of the suction motor **226** and the cyclone **244**. In alternate embodiments, the pre-motor filter may overlie only a portion of the suction motor **226** and the cyclone **244**. Preferably, the pre-motor filter **276** overlies at least half of the suction motor **226** and the cyclone chamber **250**, and more preferably, at least 75% of the suction motor **226** and the cyclone chamber **250**. More preferably, the pre-motor filter **276** overlies at least half of the suction motor **226** and the cyclone **244**, and more preferably, at least 75% of the suction motor **226** and the cyclone **244**. Most preferably, as shown, the pre-motor filter has a portion **245** that is centered over the suction motor **226** and a portion **247** that overlies at least half of the cyclone **244**. In the embodiment shown, the portion **247** overlies all of the cyclone **244**.

The pre-motor filter has an upstream side **280** that faces the first sidewall **232** of the main housing **220**, and an opposed downstream side **282** that faces the second sidewall **234** of the main housing **220**. The pre-motor filter **276** may be any suitable type of filter. Preferably, the pre-motor filter includes a foam layer **286** and a felt layer **288**.

Referring still to FIG. **2**, the cyclone air outlet **264** extends through the pre-motor filter **276**, so that air exiting the pre-motor filter **276** is in contact with the upstream side **280** of the pre-motor filter **286**.

The air then passes through the pre-motor filter **276**, towards a suction motor inlet end **239** that faces the downstream side **282** of the pre-motor filter **276**. From the suction motor inlet **239**, the air passes towards a suction motor outlet end **243**, and out of the clean air outlet **204**.

Preferably, as shown in FIG. **3**B, when the first openable door **229** is open, the upstream side **280** of the pre-motor **276** is visible. By opening the openable door **229**, the pre-motor filter may optionally be removed, replaced, or cleaned. Further, the pre-motor filter **276** is preferably mounted to at

least one of the cyclone **244** and the suction motor **226**, and the pre-motor filter **276** remains in position when the first openable door **229** is opened. For example, as shown, the pre-motor filter **276** is frictionally mounted to the cyclone air outlet **264**.

Referring still to FIG. **2**, the surface cleaning apparatus further includes a bleed valve **201**. The bleed valve **201** allows air to flow from the suction motor inlet **239** to the clean air outlet **204** so that the suction motor **226** does not burn out if a clog occurs.

Referring to FIGS. **4** and **5**, a further alternate surface cleaning apparatus **400** is shown. The surface cleaning apparatus is similar to the surface cleaning apparatus **200**, and like numerals in the surface cleaning apparatus **800** will be used to describe like features as in the surface cleaning apparatus **200**, with the first digit incremented to **8**.

In the surface cleaning apparatus **800**, the cyclone air outlet **864** does not extend through the pre-motor filter **876**. The upstream side **880** of the pre-motor filter **876** faces towards the second sidewall **834** of the housing **820** and faces the cyclone air outlet **864**, and the downstream side **882** of the pre-motor filter **876** faces the first sidewall **834**. Air passes out of the second end **872** of the cyclone air outlet **864**, through the pre-motor filter, and into the chamber **841**.

The suction motor **826** has a suction motor inlet duct **853** that extends through the pre-motor filter **876** to the downstream side **882** of the pre-motor filter **876**.

In this embodiment, the bleed valve **801** is provided in the openable door, and has an air outlet **805** that is within the chamber **841**, so that it is in communication with the suction motor air inlet end **839**.

When the openable door is open, the suction motor inlet **839** is visible, and the downstream side **882** of the pre-motor filter **876** is visible.

Referring to FIGS. **6**A and **6**B, a further alternate surface cleaning apparatus **900** is shown. The surface cleaning apparatus is similar to the surface cleaning apparatus **200**, and like numerals in the surface cleaning apparatus **900** will be used to describe like features as in the surface cleaning apparatus **200**, with the first digit incremented to 9.

In the surface cleaning apparatus **900**, the post motor filter **976** overlies only the motor (not shown) and the motor housing **927**, and does not overlie the cyclone **944**. The cyclone outlet **964** is in communication with the upstream side **980** of the post motor filter **976**, which faces towards the first side **232** of the housing **220**. The downstream side of the post motor filter **976** faces the motor inlet end (not shown) and the second side **234** of the housing **920**. A bleed valve **901** extends through the post motor filter **976**.

Referring to FIGS. **7-10**, a further alternate surface cleaning apparatus **1100** is shown. In the embodiment illustrated, the surface cleaning apparatus **1100** is a hand operable surface cleaning apparatus. In alternate embodiments, the surface cleaning apparatus may be another suitable type of surface cleaning apparatus, including, for example, an upright vacuum cleaner, a canister vacuum cleaner, a stick vacuum cleaner, a wet-dry vacuum cleaner and a carpet extractor.

Referring to FIG. **10**, the surface cleaning apparatus **1100** has a dirty air inlet **1102**, a clean air outlet **1104** and an airflow passage extending therebetween. In the embodiment shown, the dirty air inlet **1102** is the air inlet **1106** of a suction hose connector **1108** that can be connected to the downstream end of, e.g., a flexible suction hose or other type of cleaning accessory tool, including, for example, a wand and a nozzle. From the dirty air inlet **1102**, the airflow passage extends through an air treatment member that can treat the air in a desired manner, including for example removing dirt particles and debris from the air. In the illustrated example, the air treatment member comprises a cyclone bin assembly **1110**. The cyclone bin assembly **1110** is mounted on a body **1112**. Alternatively, or in addition, the air treatment member can comprise a bag, a filter or other air treating means. A suction motor **1114** that is mounted within the body **1112** and is in fluid communication with the cyclone bin assembly **1110**.

The clean air outlet **1104**, which is in fluid communication with an outlet of the suction motor **1114**, is provided in the body **1112**. In the illustrated example, the dirty air inlet **1102** is located toward the front of the surface cleaning apparatus **1100**, and the clear air outlet **1104** is located toward the rear.

In the illustrated example, cyclone bin assembly **1110** includes a cyclone chamber **1118** and a dirt collection chamber **1120**. The cyclone chamber **1118** is bounded by a sidewall **1122**, a first end wall **1124** and a second end wall **1126** that are configured to provide an inverted cyclone configuration. A tangential air inlet **1128** is provided in the sidewall of the cyclone chamber **1118** and is in fluid communication with the air outlet of the hose connector **1108**. Air flowing into the cyclone chamber **1118** via the tangential air inlet **1128** can circulate around the interior of the cyclone chamber **1118** and dirt particles and other debris can become disentrained from the circulating air.

A slot **1132** formed between the sidewall **1122** and the second end wall **1126** serves as a cyclone dirt outlet **1132**. Debris separated from the air flow in the cyclone chamber **1118** can travel from the cyclone chamber **1118**, through the dirt outlet **1132** to the dirt collection chamber **1120**.

Air can exit the cyclone chamber **1118** via an air outlet. In the illustrated example, the cyclone air outlet includes a vortex finder **1134**. Optionally, a removable screen **1136** can be positioned over the vortex finder **1134**. The cyclone chamber **1118** extends along a longitudinal cyclone axis **1138**. In the example illustrated, the longitudinal cyclone axis **1138** is aligned with the orientation of the vortex finder **1134**.

The dirt collection chamber **1120** comprises a sidewall **1140**, a first end wall **1142** and an opposing second end wall **1144**. In the illustrated example, at least a portion of the dirt collection chamber sidewall **1140** is integral with a portion of the cyclone chamber sidewall **1122**, and at least a portion of the first cyclone end wall **1124** is integral with a portion of the first dirt collection chamber end wall **1142**.

Referring to FIG. **8**, the cyclone bin assembly **1110** is optionally detachably connected to the body **1112**. In the example illustrated, the cyclone bin assembly **1110** is detachably mounted on a platform **1148**. A releasable latch **1150** can be used to secure a front edge of the cyclone bin assembly **1110** to the body **1112**.

Referring to FIG. **7**, a handle **1152** is provided on the top of the cyclone bin assembly **1110**. The handle **1152** is configured to be grasped by a user. When the cyclone bin assembly **1110** is mounted on the body **1112**, the handle **1152** can be used to manipulate the surface cleaning apparatus **1100**. When the cyclone bin assembly **1110** is removed from the body **1112**, the handle **1152** can be used to carry the cyclone bin assembly **110**, for example to position the cyclone bin assembly **1110** above a waste receptacle for emptying. In the illustrated example, the handle **1152** is integral with a lid **1154** of the cyclone bin assembly **110**.

Referring to FIGS. **9** and **10**, the dirt collection chamber sidewall **1140** comprises a recess **1214** that is shaped to receive a corresponding portion of the body **1112**. In the illustrated example, the recess **1214** is shaped to receive a

portion of the motor housing **1216** surrounding the suction motor **1114**. In this example, at least a portion of the dirt collection chamber **1120** is positioned between the cyclone chamber **1118** and the suction motor **1114**. Preferably, at least a portion of the dirt collection chamber **1120** surrounds at least a portion of the suction motor **1114** and, if a suction motor housing is provided, the suction motor housing **1216**. In the illustrated example, the dirt collection chamber **1120** surrounds only a portion of the motor housing **1216**. The shape of the recess **1214** is preferably selected to correspond to the shape of the suction motor housing **1216** so as to maximize the size of the dirt collection chamber for the foot print of the vacuum cleaner. Configuring the dirt collection chamber **1120** to at least partially surround the suction motor housing **216** may help reduce the overall length of the surface cleaning apparatus **1100**, and/or may help increase the capacity of the dirt collection chamber **1120**.

Referring to FIG. **10**, the dirt collection chamber **1120** also surrounds at least a portion of the cyclone chamber **1118**. Optionally, the dirt collection chamber **1120** can be configured to completely surround the cyclone chamber **1118**.

Air exiting the cyclone chamber **1118** flows to a suction motor **1114** inlet via an filter chamber **1186**. The filter chamber **1186** is provided downstream from the cyclone air outlet. In the illustrated example, the filter chamber **1186** extends over substantially the entire lower portion of the body **1112** and overlies substantially all of the cyclone chamber **1118**, dirt collection chamber **1120** and suction motor **1114**.

A pre-motor filter **1218** is provided in the filter chamber **1186** to filter the air before it enters the suction motor inlet **1220**. The pre-motor filter **1218** is sized to cover the entire area of the filter chamber **1186**, and overlies substantially all of the cyclone chamber **1118**, dirt collection chamber **1120** and suction motor **1114**. Preferably, the cross sectional area (in the direction of air flow) of the pre-motor filter **1218** is greater than the cross sectional area of the cyclone chamber **1118** and the suction motor **1114**. In the illustrated example, the pre-motor filter **1218** comprises first and second pre-motor filters **1218***a*, **1218***b*. The filter chamber **1186** comprises an air inlet chamber **1222** on the upstream side **1224** of the pre-motor filter **1218**, and an air outlet chamber **1226** on the downstream side **1228** of the pre-motor filter **1218**. Air can travel from the air inlet chamber **1222** to the air outlet chamber **1226** by flowing through the air-permeable pre-motor filter **1218**. It will be appreciated that the larger the cross sectional area of the upstream face of the filter, the greater the capacity of the filter to filter particulates without the filter becoming clogged. Accordingly, it is preferred to make pre-motor filter **1218** as large as possible. Accordingly, it is preferred that filter chamber **1186** is as large as possible (i.e. it overlies all of an end face of the cyclone chamber, dirt collection chamber and suction motor) and that the pre-motor filter **1218** extends over the full transverse extent of filter chamber **1186**. It will be appreciated that the filter chamber **1186** may overlie only a portion of the end face of the cyclone chamber, dirt collection chamber and suction motor but may still provide a larger upstream surface area then is the filter only overlied the cyclone chamber.

The lower side of the air filtration chamber comprises a filtration chamber end wall **1244**. Optionally, the first end wall **1244** of the filter chamber **1186** can be openable to allow a user to access the pre-motor filter **1218**. In the illustrated example, the filter chamber end wall **1244** is pivotally connected to the body **1112** by a hinge **1246** and can pivot to an open position. The releasable latch **1150** can be used to secure in a closed position. The latch **1150** can connect the filter chamber end wall **1244** to the cyclone bin assembly **1110**. As exemplified and discussed hereafter, the upstream side of pre-motor filter **1218** is visible when filter chamber end wall **1244** is in the open position and accordingly, a user may readily detect if the pre-motor filter **1218** requires cleaning or changing.

The air inlet chamber **1222** is fluidly connected to the cyclone chamber air outlet by an inlet conduit **1230** that extends through the pre-motor filter **1218**. In the illustrated example the inlet conduit **1230** comprises an extension of a vortex finder insert. The air outlet chamber **1226** is in fluid communication with the inlet **1220** of the suction motor **1114**. The pre-motor filter **1218** may be supported by a plurality of support ribs **1232** extending through the air outlet chamber **1226**. Gaps or cutouts can be provided in the ribs **1232** to allow air to circulate within the air outlet chamber **1226** and flow toward the suction motor inlet **1220**. From the suction motor inlet **1220**, the air is drawn through the suction motor **1114** and ejected via a suction motor outlet **1116**. Optionally, a post-motor filter **1236** (for example a HEPA filter) can be provided downstream from the suction motor outlet **1116**, between the suction motor outlet **1116** and the clean air outlet **1104**. A detachable grill **1238** can be used to retain the post-motor filter **1236** in position, and allow a user to access the post-motor filter **1236** for inspection or replacement.

Referring to FIGS. **11** to **16**, another embodiment of a surface cleaning apparatus **2100** is shown. In the embodiment illustrated, the surface cleaning apparatus **2100** is a canister vacuum cleaner. The surface cleaning apparatus **2100** has a dirty air inlet **2102**, a clean air outlet **2104** and an airflow passage extending therebetween. In the embodiment shown, the dirty air inlet **2102** is the air inlet of a suction hose connector **2106** that can be connected to the downstream end of a flexible suction hose or other type of cleaning accessory tool, including, for example, a surface cleaning head, a wand and a nozzle. From the dirty air inlet **2102**, the airflow passage extends through an air treatment member **2108** that can treat the air in a desired manner, including for example removing dirt particles and debris from the air. In the illustrated example, the air treatment member **2108** comprises a cyclone bin assembly **2110**. Alternatively, or in addition, the air treatment member **2108** can comprise a bag, a filter or other air treating means. A suction motor **2111** (FIG. **16**) is mounted within a body **2112** of the surface cleaning apparatus **2100** and is in fluid communication with the cyclone bin assembly **2110**. In the illustrated example, the body **2112** of the surface cleaning apparatus **2100** is a rollable, canister-type body that comprises a platform **2114** and two opposing sidewalls **2116***a*, **2116***b* that cooperate to define a central cavity **2118**. The surface cleaning apparatus **2100** also comprises two main side wheels **2120***a*, **2120***b*, rotatably coupled to the sidewalls **2116***a* and **2116***b*, respectively.

The clean air outlet **2104**, which is in fluid communication with an outlet of the suction motor **2111**, is provided in the body **2112**. In the illustrated example, the dirty air inlet **2102** is located toward the front **2122** of the surface cleaning apparatus **2100**, and the clear air outlet is located toward the rear **2124**.

In the illustrated example, the body sidewalls **2116***a, b* are generally circular and cover substantially the entire side faces of the surface cleaning apparatus **2100**. One main side wheel **2120***a*, **2120***b* is coupled to the outer face of each body sidewall **2116***a* and **2116***b*, respectively. Optionally, the side wheels **2120***a*, **2120***b* may have a larger diameter

2126 than the body sidewalls 2116*a, b* and can completely cover the outer faces of the sidewalls 2116*a, b*. Referring to FIG. 16, each side wheel 2120*a, b* is rotatably supported by a corresponding axel 2128*a*, 2128*b*, which extends from the body sidewalls 2116*a* and 2116*b*, respectively. The main side wheels 2120*a* and 2120*b* are rotatable about a primary axis of rotation 2130. In the illustrated example, the primary axis of rotation 2130 passes through the cyclone bin assembly 2110.

Optionally, at least one of the side wheels 120*a, b* can be detachable from the body 112. Referring to FIG. 15, in the illustrated example side wheel 2120*a* is detachably coupled to its corresponding axels 2128*a* by a threaded hub assembly 2132*a*, and can be removed from the body 2112. Removing the side wheel 2120*a* from the body 112, or otherwise positioning them in an open configuration, may allow a user to access a variety of components located in compartments between the side wheels 120*a* and 120*b* and the corresponding sidewalls 116*a* and 116*b*, as explained in greater detail below.

FIGS. 12, 13, 14 and 16 illustrated an example of a cyclone bin assembly 2110 includes a cyclone chamber 2162 and a dirt collection chamber 2164 in accordance with one embodiment. The cyclone bin assembly 2110 is detachably mounted in the cavity 2118, laterally between the sidewalls 2116*a*, 2116*b* and side wheels 2120*a*, 2120*b*. Positioning the cyclone bin assembly 2110 in the cavity 2118, between the body sidewalls 2116*a*, 2116*b* may help protect the cyclone bin assembly 2110 from side impacts, for example if the surface cleaning apparatus 2100 contacts a piece of furniture or other obstacle. Preferably, the body sidewalls 2116*a*, 2116*b* have a larger cross-sectional area than the cyclone bin assembly 2110. More preferably, the transverse faces of the cyclone bin assembly 2110 are entirely covered by the body sidewalls 2116*a*, 2116*b*.

In the illustrated example, the cyclone chamber 2162 is bounded by a sidewall 2166, a first end wall 2168 and a second end wall 2170. A tangential air inlet 2172 is provided in the sidewall of the cyclone chamber 2162 and is in fluid communication with the dirty air inlet 2102. Air flowing into the cyclone chamber 2162 via the air inlet can circulate around the interior of the cyclone chamber 2162 and dirt particles and other debris can become disentrained from the circulating air.

A slot 2180 formed between the sidewall 2166 and the second end wall 2170 serves as a cyclone dirt outlet 2180. Debris separated from the air flow in the cyclone chamber 2162 can travel from the cyclone chamber 2162, through the dirt outlet 2180 to the dirt collection chamber 2164.

Air can exit the cyclone chamber 2162 via an air outlet. In the illustrated example, the cyclone air outlet includes a vortex finder 2182. Optionally, a removable screen 2183 can be positioned over the vortex finder 2182. The cyclone chamber 2162 extends along a longitudinal cyclone axis 2184. In the example illustrated, the longitudinal cyclone axis is aligned with the orientation of the vortex finder 2182 and is generally transverse to the direction of movement of the surface cleaning apparatus 2100. The cyclone chamber 2162 has a generally circular cross sectional shape (taken in a plane perpendicular to the cyclone axis) and has a cyclone diameter 2186.

The dirt collection chamber 2164 comprises a sidewall 2174, a first end wall 2176 and an opposing second end wall 2178. In the illustrated example, at least a portion of the dirt collection chamber sidewall 2174 is integral with a portion of the cyclone chamber sidewall 2166, and at least a portion of the first cyclone end wall 2168 is integral with a portion of the first dirt collection chamber end wall 2176.

Referring to FIGS. 12 and 14, a lower surface 2188 of the cyclone bin assembly 2110 is configured to rest on the platform 2114, and the first and second end walls 2168, 2170 of the cyclone bin assembly 2110 are shaped to engage the inner surfaces of the body sidewalls 2116*a*, 2116*b*, respectively. The upper portion of the cyclone bin (as viewed when installed in the cavity 2118) can have a radius of curvature that generally corresponds to the radius of curvature of the body sidewalls 2116*a*, 2116*b* and the side wheels 2120*a*, 2120*b*. Matching the curvature of the cyclone bin assembly 2110 with the curvature of the side wheels 120*a*, 120*b* may help facilitate mounting of the cyclone bin assembly 2110 within the body 2112, so that the walls of the cyclone bin assembly 2110 do not extend radially beyond the body sidewalls 2116*a*, 1216*b* or main side wheels 2120*a*, 2120*b*.

Referring to FIG. 13, the second dirt collection chamber end wall 2178 is preferably pivotally connected to the dirt collection chamber sidewall 2174. The second dirt collection chamber end wall 2178 can be opened to empty dirt and debris from the interior of the dirt collection chamber 2164. Optionally, the second cyclone end wall 2170 is integral with and is openable with the second dirt collection chamber end wall 2178. Opening the second cyclone end wall 2170 can allow dirt and debris to be emptied from the cyclone chamber 2162. The second dirt collection chamber sidewall 2178 can be retained in the closed position by a releasable latch 2204. Optionally, the screen 2183 and/or the vortex finder 2182 can be removable from the cyclone chamber 2162 and can be removed when the second dirt collection chamber end wall 2178 is open.

Referring to FIGS. 13 and 14, the dirt collection chamber sidewall 2174 comprises a recess 2206 that is shaped to receive a corresponding portion of the body 2112. Referring to FIG. 12, in the illustrated example, the platform 2114 comprises a generally planar bearing surface 2208 for supporting the cyclone bin assembly 2110. The platform 2114 also comprises at least a portion of the suction motor housing 2210 surrounding the suction motor 2111. In this example, the recess 2206 in the dirt collection chamber sidewall 2174 is shaped to receive the portion of the motor housing 2210 projecting above the planar bearing surface 2208.

Preferably, at least a portion of the dirt collection chamber 2164 surrounds at least a portion of the suction motor 2111 and the suction motor housing 2210. In this example, at least a portion of the dirt collection chamber 2164 is positioned between the cyclone chamber 2162 and the suction motor housing 2210 (and the suction motor 2111 therein). Configuring the dirt collection chamber 2164 to at least partially surround the suction motor housing 2210 may help reduce the overall size of the surface cleaning apparatus 2100, and/or may help increase the capacity of the dirt collection chamber 2164. The dirt collection chamber 2164 also surrounds at least a portion of the cyclone chamber 2162.

Referring to FIGS. 15 and 16, air exiting the cyclone chamber 2162 flows to a suction motor inlet 2246 via a filter chamber 2248. The filter chamber 2248 is provided downstream from the cyclone air outlet. In the illustrated example, the filter chamber 2248 comprises a recessed chamber in the body sidewall 2116*a* that is enclosed by an openable seal plate 2250. A sealing gasket 2254 is provided at the interface between an annular rim 2252 of the sidewall 2116*a* and the seal plate 2250 to help provide an air-tight filter chamber 2248. In the illustrated example, the filter chamber 2248 extends over substantially the entire sidewall

2116*a* and overlies substantially all of the transverse cross sectional area of cyclone chamber **2162**, dirt collection chamber **2164** and suction motor **2111**.

A pre-motor filter **2256** is provided in the filter chamber **2248** to filter the air before it enters the suction motor inlet. The pre-motor filter **2256** is sized to cover substantially the entire area of the filter chamber **2248**, and overlies substantially all of the transverse cross sectional area of the cyclone chamber **2162**, dirt collection chamber **2164** and suction motor **2111**. In the illustrated example, the pre-motor filter **2256** comprises first and second pre-motor filters **2256***a*, **2256***b*. The filter chamber **2248** comprises an air inlet chamber **2258** on the upstream side of the pre-motor filter **256**, and an air outlet chamber **2260** on the downstream side of the pre-motor filter **2256**. Air can travel from the air inlet chamber **2258** to the air outlet chamber **2260** by flowing through the pre-motor filter **2256**.

The air inlet chamber **2258** is fluidly connected to the vortex finder **2182** by an inlet conduit **2262** that extends through a first aperture **2264** in the pre-motor filter **2256**. The air outlet chamber **2260** is in fluid communication with the inlet **2246** of the suction motor **2111**. The pre-motor filter **2256** can be supported by a plurality of support ribs **2266** extending from the sidewall **2116***a* into the air outlet chamber **2260**. Cutouts can be provided in the ribs to allow air to circulate within the air outlet chamber **2266** and flow toward the suction motor inlet **2246**.

In the illustrated example, the axle **2128***a* for supporting the side wheel extends through the air filter chamber **2248**, a second aperture **2268** in the pre-motor filter **2256** and through an axel aperture **2270** in the seal plate **2250**. The axle aperture **2270** in the seal plate **2250** is configured to provide an air-tight seal against the axel **2128***a*. Optionally, a sealing gasket can be provided at the interface between the seal plate **2250** and the axel **2128***a*. In this configuration the pre-motor filter **2256** surrounds the axel **2128***a*.

In the illustrated example, the seal plate **2250** is removable, when the side wheel **2120***a* is detached, to allow a user to access the pre-motor filter **2256**. Alternatively, instead of being removable, the seal plate **2250** can be movably attached to the body **2112**, for example pivotally connected to the sidewall **2116***a*, such that the seal plate **2250** can be opened without being completely detached from the body **2112**.

Preferably, the seal plate **2250** is transparent, or at least partially transparent. Providing a transparent seal plate **2250** may help facilitate visual inspection of the upstream side **2272** of the pre-motor filter **2256** while the seal plate **2250** is in place. When the seal plate **2250** is removed, the pre-motor filter **2256** may be removed, for example for cleaning or replacement.

A bleed valve is provided to supply clean air to the suction motor inlet. In the illustrated example a bleed valve air outlet **2278** is in fluid communication with the air outlet chamber **2260** and can introduce clean air into the air outlet chamber **2260** downstream from the pre-motor filter **2256**. Air introduced by the bleed valve can flow through the cutouts in the supporting ribs **2266**, as described above. The bleed valve may be a pressure sensitive valve that is opened when there is a blockage in the air flow path upstream from the suction motor **2111**. In the illustrated example, the bleed valve is parallel with the suction motor **2111**. A bleed valve inlet **2280** (see also FIG. **11**) is provided toward the front of the body **2112**.

It will be appreciated that, in one embodiment, the enhanced dirt collection chamber construction may be used by itself without the enhanced filter chamber design. Alternately, both the enhanced dirt collection chamber construction and the enhanced filter chamber design may be used concurrently as exemplified herein. It will also be appreciated that the cyclone chamber may be of any design and configuration. When either of the enhanced dirt collection chamber construction and/or the enhanced filter chamber design are used, the vacuum cleaner may be of any design and the dirt collection chamber may or may not be removably mounted from the vacuum cleaner.

Various apparatuses or methods are described above to provide an example of each claimed invention. No example described above limits any claimed invention and any claimed invention may cover processes or apparatuses that are not described above. The claimed inventions are not limited to apparatuses or processes having all of the features of any one apparatus or process described above or to features common to multiple or all of the apparatuses described above.

The invention claimed is:

1. A hand vacuum cleaner having a front end, a rear end, and comprising:

(a) a main housing;

(b) a dirty fluid inlet;

(c) a cyclone bin assembly comprising a cyclone chamber downstream of the dirty fluid inlet, the cyclone chamber comprising a first end, a second end, a cyclone axis, a cyclone air inlet and a cyclone air outlet wherein the cyclone air outlet is located at the second end;

(d) a pre-motor filter comprising an upstream side and a downstream side, the pre-motor filter is positioned in a pre-motor filter housing having an openable cover, the cyclone axis extends through the pre-motor filter housing;

(e) a suction motor positioned in the main housing and located downstream of the pre-motor filter and rearward of the cyclone bin assembly;

(f) an air flow path extending from the pre-motor filter to the suction motor;

(g) a clean air outlet downstream of the suction motor; and,

(h) a handle connected to the hand vacuum cleaner at first and second locations, wherein the first location is at a position of the suction motor in the main housing and a first handle portion is connected at the first location, wherein a projection of the first handle portion extends through the suction motor,

wherein the pre-motor filter housing is openable without moving the handle with respect to the cyclone chamber, and

wherein the pre-motor filter housing cover is openable while the cyclone bin assembly is in fluid flow communication with the suction motor.

2. The hand vacuum cleaner of claim **1** wherein the suction motor comprises a fan and a motor and an upstream side of the fan is positioned proximate the cyclone inlet.

3. The hand vacuum cleaner of claim **1** wherein the downstream side of the pre-motor filter is spaced further from the cyclone chamber than the upstream side of the pre-motor filter.

4. The hand vacuum cleaner of claim **3** further comprising a downstream header on the downstream side of the pre-motor filter and the downstream header is opened when the openable cover is opened.

5. The hand vacuum cleaner of claim **1** wherein the upstream side of the pre-motor filter is spaced further from the cyclone chamber than the downstream side of the pre-motor filter.

6. The hand vacuum cleaner of claim 5 further comprising a conduit that is in flow communication with the air outlet of the cyclone chamber and extends through the pre-motor filter.

7. The hand vacuum cleaner of claim 5 further comprising an upstream header on the upstream side of the pre-motor filter and the upstream header is opened when the openable cover is opened.

8. The hand vacuum cleaner of claim 1 wherein each of the upstream and downstream sides of the pre-motor filter has a front end positioned proximate the front end and extending rearwardly, the pre-motor filter is positioned axially outwardly from the second end of the cyclone chamber and downstream of the cyclone chamber, the cyclone air outlet is positioned at a location spaced from the front end of the pre-motor filter.

9. The hand vacuum cleaner of claim 1 wherein the pre-motor filter is positioned axially outwardly from the second end of the cyclone chamber and downstream of the cyclone chamber, the pre-motor filter overlies at least a portion of the second end of the cyclone chamber.

10. The hand vacuum cleaner of claim 1 wherein the suction motor has a suction motor axis and when the hand vacuum cleaner is carried by the handle, the suction motor axis extends generally horizontally.

11. The hand vacuum cleaner of claim 10 wherein when the hand vacuum cleaner is carried by the handle, the cyclone axis extends generally horizontally.

12. The hand vacuum cleaner of claim 1 wherein when the hand vacuum cleaner is carried by the handle, the cyclone axis extends generally horizontally.

13. The hand vacuum cleaner of claim 1 wherein the pre-motor filter comprises a physical filter media.

14. A hand vacuum cleaner having a front end, a rear end and comprising:

(a) a main housing;

(b) a dirty fluid inlet;

(c) a cyclone bin assembly comprising a cyclone chamber downstream of the dirty fluid inlet, the cyclone chamber comprising a first end, a second end, a cyclone air inlet, a cyclone axis, and a cyclone air outlet that is located at the second end;

(d) a pre-motor filter comprising an upstream side and a downstream side, the pre-motor filter is positioned in a pre-motor filter housing having an openable cover;

(e) a suction motor positioned in the main housing and located downstream of the pre-motor filter and rearward of the cyclone bin assembly;

(f) an air flow path extending from the pre-motor filter to the suction motor;

(g) a clean air outlet downstream of the suction motor; and,

(h) a handle connected to the hand vacuum cleaner at first and second locations wherein the first location is at a position of the suction motor in the main housing, the handle has a first handle portion provided at the first location, a projection of the first handle portion extends through the suction motor, and the pre-motor filter housing is openable without moving the handle with respect to the cyclone chamber;

wherein the pre-motor filter housing cover is openable while the cyclone chamber is in fluid flow communication with the suction motor, and

wherein the first and second locations are provided other than on the openable pre-motor filter housing cover.

15. The hand vacuum cleaner of claim 14 wherein the suction motor comprises a fan and a motor and an upstream side of the fan is positioned proximate the cyclone air inlet.

16. The hand vacuum cleaner of claim 14 wherein the downstream side of the pre-motor filter is spaced further from the cyclone chamber than the upstream side of the pre-motor filter.

17. The hand vacuum cleaner of claim 14 further comprising a downstream header on the downstream side of the pre-motor filter and the downstream header is opened when the openable cover is opened.

18. The hand vacuum cleaner of claim 14 wherein the upstream side of the pre-motor filter is spaced further from the cyclone chamber than the downstream side of the pre-motor filter.

19. The hand vacuum cleaner of claim 18 further comprising a conduit that is in flow communication with the cyclone air outlet and extends through the pre-motor filter.

20. The hand vacuum cleaner of claim 18 further comprising an upstream header on the upstream side of the pre-motor filter and the upstream header is opened when the openable cover is opened.

21. The hand vacuum cleaner of claim 14 wherein each of the upstream and downstream sides of the pre-motor filter has a front end positioned proximate the front end and extending rearwardly, the pre-motor filter is positioned axially outwardly from the second end of the cyclone chamber and downstream of the cyclone chamber, the cyclone air outlet is positioned at a location spaced from the front end of the pre-motor filter.

22. The hand vacuum cleaner of claim 14 wherein the suction motor has a suction motor axis and when the hand vacuum cleaner is carried by the handle, the suction motor axis extends generally horizontally.

23. The hand vacuum cleaner of claim 22 wherein when the hand vacuum cleaner is carried by the handle, the cyclone axis extends generally horizontally.

24. The hand vacuum cleaner of claim 14 wherein when the hand vacuum cleaner is carried by the handle, the cyclone axis extends generally horizontally.

25. The hand vacuum cleaner of claim 14 wherein the pre-motor filter comprises a physical filter media.

* * * * *