Exhibit 10

Either Anticipation by U.S. Patent Publication No. 2004/0025218 (Published Feb. 12, 2004) or Obviousness In View of Andrew Christian Style No. 9132 (Show-It Brief) and 9133 (Show-It Boxer) and EP O 476 818 or the '369 Patent

The disclosure of U.S. Patent Publication No. 2004/0025218 (published Feb. 12, 2004) ("'218 Publication") either expressly, implicitly, or inherently anticipates the asserted claims of U.S. Patent No. 10,034,496 under 35 U.S.C. § 102 and/or renders those claims obvious under 35 U.S.C. § 103 in view of the Andrew Christian Products in Style No. 9132 (Show-It Brief) ("9132 Show-It Brief") and Style No. 9133 (Show-It Boxer) ("9133 Show-It Boxer") (on sale at least as early as March 6, 2009), and/or European Patent Application No. EP 0 476 818 A1 (Published March 25, 1992) ("EP O 476 818"), and/or U.S. Patent No. 7,631,369 (issued Dec. 15, 2009) (the "'369 Patent"), as set forth in the chart below.

The obviousness combinations asserted and disclosed in this chart are as follows:

- '218 Publication in view of 9132 Show-It Brief/9133 Show-It Boxer (all asserted claims)
- '218 Publication in view of 9132 Show-It Brief/9133 Show-It Boxer in further view of EP O 476 818 (all asserted claims)
- '218 Publication in view of 9132 Show-It Brief/9133 Show-It Boxer in further view of the '369 Patent (claim 2)

One of ordinary skill in the art of the Asserted Patents would understand to combine these references as they relate to men's underwear. The 9132 Show-It Brief and the 9133 Show-It Boxer, are men's underwear; the '218 Publication discloses a "men's undergarment;" and the '369 Patent discloses "performance underwear" for men.

Claim 1	Exemplary Disclosure in Prior Art
[1.pre] 1. A male garment comprising:	**The '218 Publication discloses a male garment.** ***See,*** "A men's undergarment" (Abstract) "MEN'S UNDERGARMENT" (Title)

Either Anticipation by U.S. Patent Publication No. 2004/0025218 (Published Feb. 12, 2004) or Obviousness In View of Andrew Christian Style No. 9132 (Show-It Brief) and 9133 (Show-It Boxer) and EP O 476 818 or the '369 Patent

Claim 1	Exemplary Disclosure in Prior Art
	"[0002] The present invention provides an undergarment for men and, more particularly, to such a men's undergarment that is good for the health of the user's genitals." 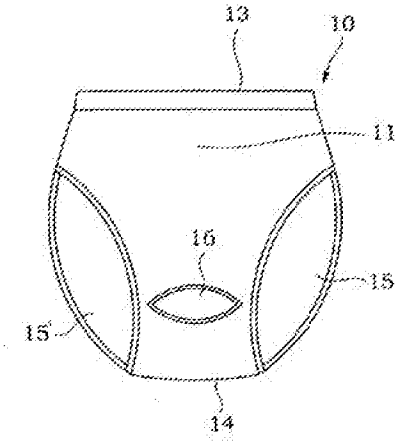 Fig.1 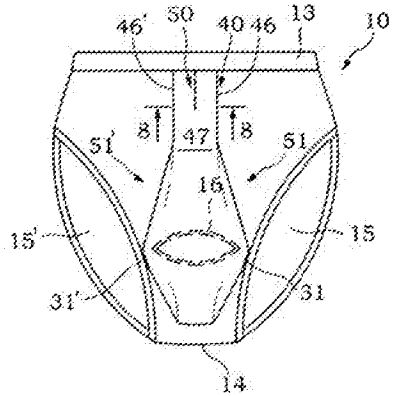 Fig.7

Either Anticipation by U.S. Patent Publication No. 2004/0025218 (Published Feb. 12, 2004) or Obviousness In View of Andrew Christian Style No. 9132 (Show-It Brief) and 9133 (Show-It Boxer) and EP O 476 818 or the '369 Patent

Claim 1	Exemplary Disclosure in Prior Art
	Furthermore, the 9132 Show-It Brief is a male garment. ***See,*** 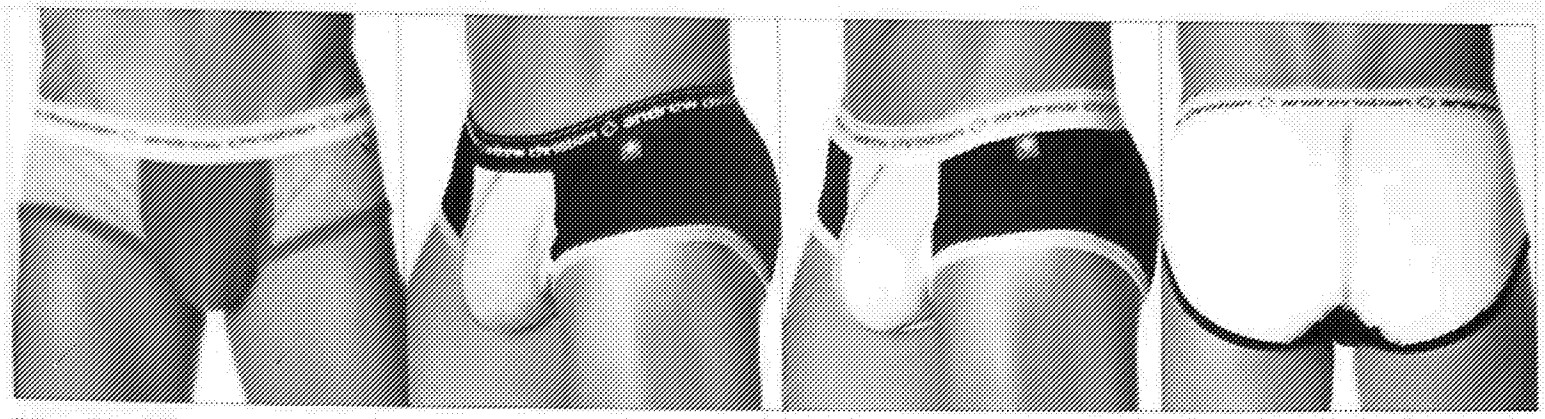 Show-It 2009 Line Sheet at ACI000092.

Either Anticipation by U.S. Patent Publication No. 2004/0025218 (Published Feb. 12, 2004) or Obviousness In View of Andrew Christian Style No. 9132 (Show-It Brief) and 9133 (Show-It Boxer) and EP O 476 818 or the '369 Patent

Claim 1	Exemplary Disclosure in Prior Art
	Show-It 2009 Line Sheet at ACI000091. ACI000040 at 00:10. 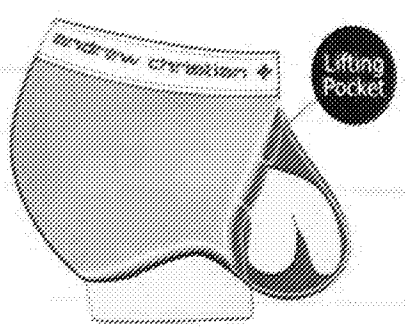 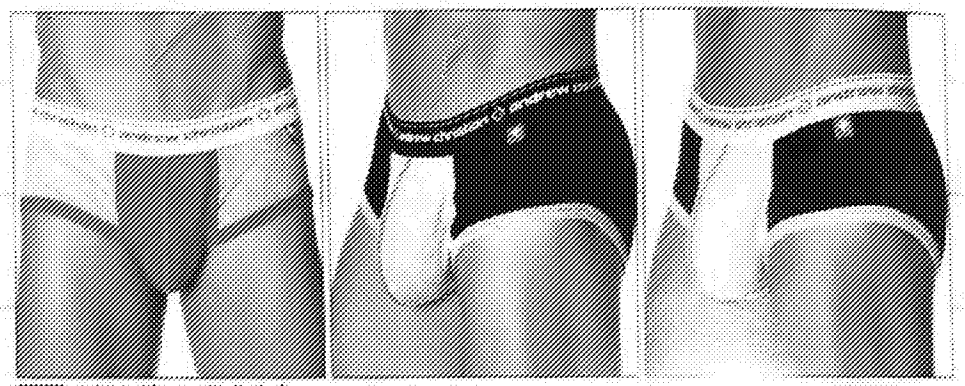 **9132 Show-It Brief** Sizes: XS-S-M-L-XL Colors: Heather, Black, Navy, White Wholesale: $12 MSPR: $27 Show-It 2009-2010 Catalog at ACI000094.

Either Anticipation by U.S. Patent Publication No. 2004/0025218 (Published Feb. 12, 2004) or Obviousness In View of Andrew Christian Style No. 9132 (Show-It Brief) and 9133 (Show-It Boxer) and EP O 476 818 or the '369 Patent

Claim 1	Exemplary Disclosure in Prior Art
	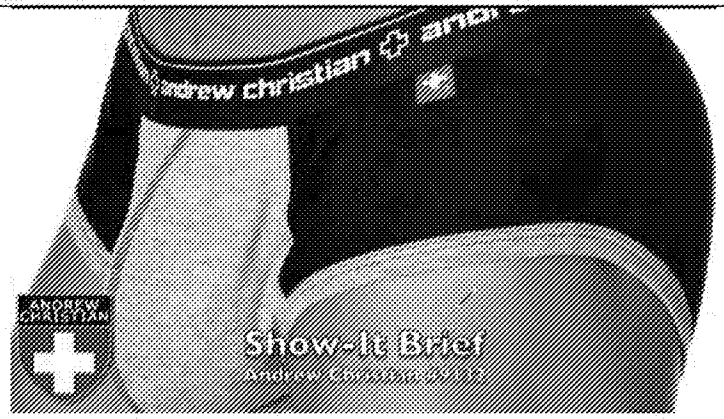 ACI000038 at 3:34. 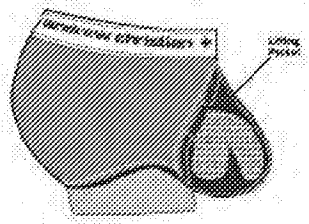 March 11, 2009 Blog Entry. **The 9133 Show-It Boxer is a male garment.** ***See,***

Either Anticipation by U.S. Patent Publication No. 2004/0025218 (Published Feb. 12, 2004) or Obviousness In View of Andrew Christian Style No. 9132 (Show-It Brief) and 9133 (Show-It Boxer) and EP O 476 818 or the '369 Patent

Claim 1	Exemplary Disclosure in Prior Art
	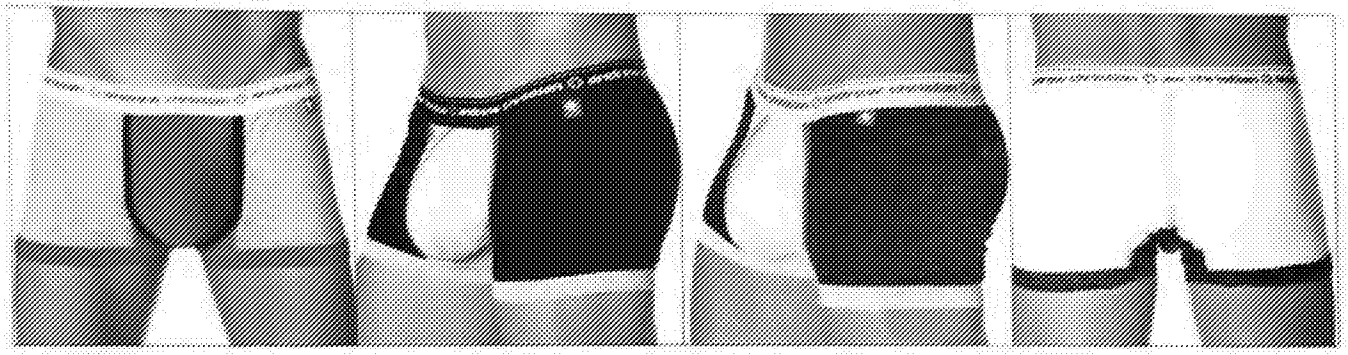 Show-It 2009 Line Sheet at ACI000092. 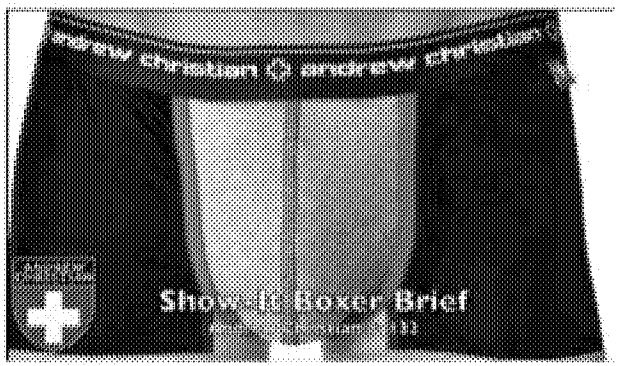 ACI000038 at 2:43.
[1.1a] a body including a	**The '218 Publication discloses a body including a front portion and having leg openings for a wearer's legs.** ***See,***

Either Anticipation by U.S. Patent Publication No. 2004/0025218 (Published Feb. 12, 2004) or Obviousness In View of Andrew Christian Style No. 9132 (Show-It Brief) and 9133 (Show-It Boxer) and EP O 476 818 or the '369 Patent

Claim 1	Exemplary Disclosure in Prior Art
front portion and having leg openings for a wearer's legs,	In particular, the '218 Publication discloses a male garment with an undergarment body including a cover panel ("20" in the first embodiment and "40" in the second embodiment) (the front portion) and having leg holes ("15" and "15'") (the leg openings for a wearer's legs). "A men's undergarment having an opening in the front panel of the undergarment body thereof and a cover panel fastened to the undergarment body" (Abstract") "[0009] . . . The under undergarment body comprises a front panel, a back panel, a waistband, and a crotch, and two leg holes." "[0021] Referring to FIG. 1, a men's undergarment in accordance with the present invention is shown comprised of an undergarment body 10 and a cover panel. The undergarment body 10 comprises a front panel 11, a back panel 12 (see FIG. 5), a waistband 13, and a crotch 14, defining two leg holes 15 and 15'." 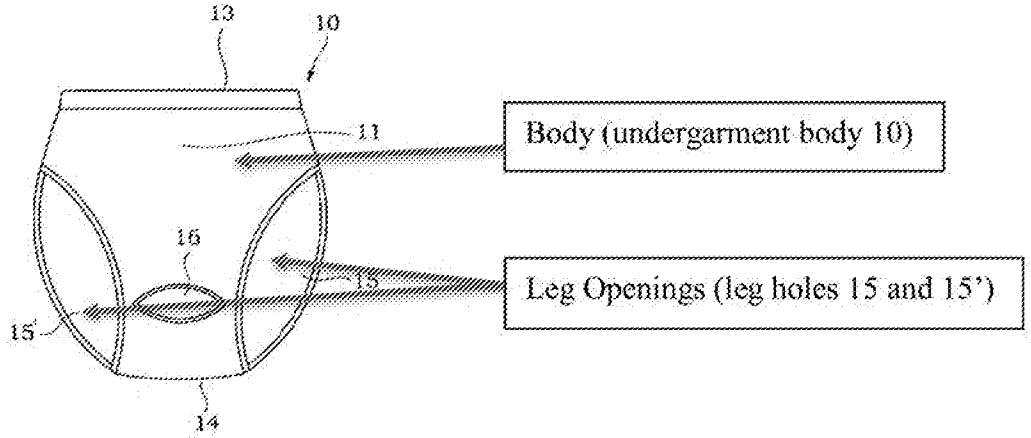 Fig. 1

Either Anticipation by U.S. Patent Publication No. 2004/0025218 (Published Feb. 12, 2004) or Obviousness In View of Andrew Christian Style No. 9132 (Show-It Brief) and 9133 (Show-It Boxer) and EP O 476 818 or the '369 Patent

Claim 1	Exemplary Disclosure in Prior Art
	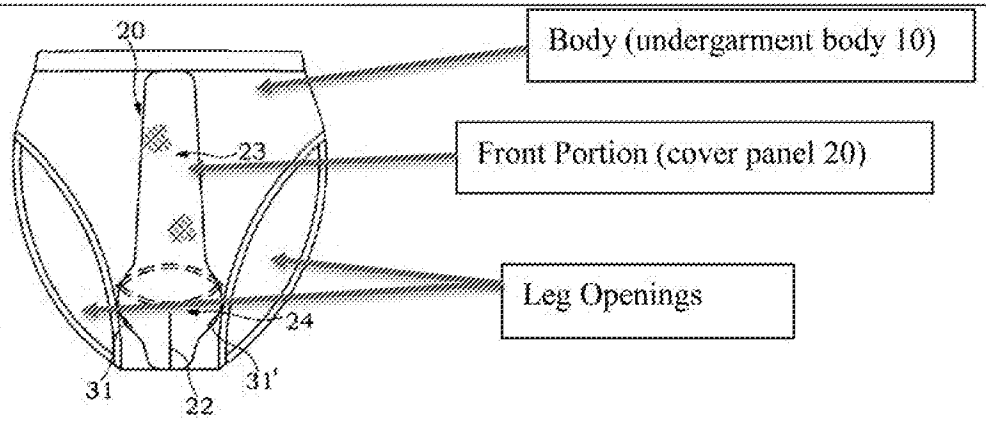 Fig.3 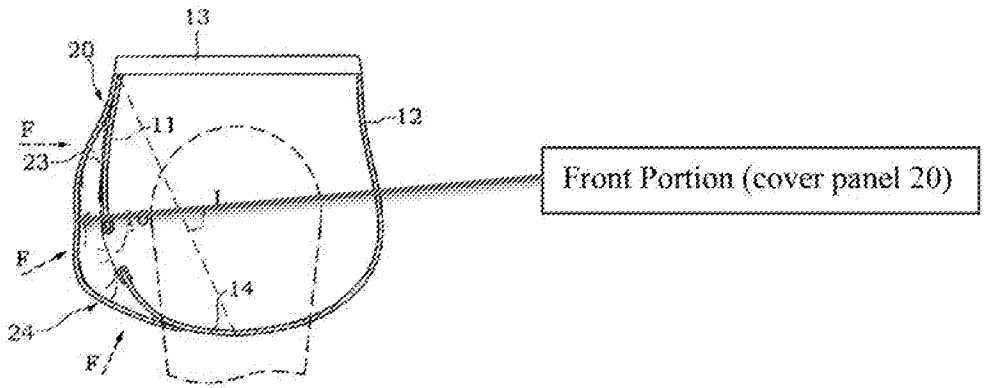 Fig.5

Either Anticipation by U.S. Patent Publication No. 2004/0025218 (Published Feb. 12, 2004) or Obviousness In View of Andrew Christian Style No. 9132 (Show-It Brief) and 9133 (Show-It Boxer) and EP O 476 818 or the '369 Patent

Claim 1	Exemplary Disclosure in Prior Art
	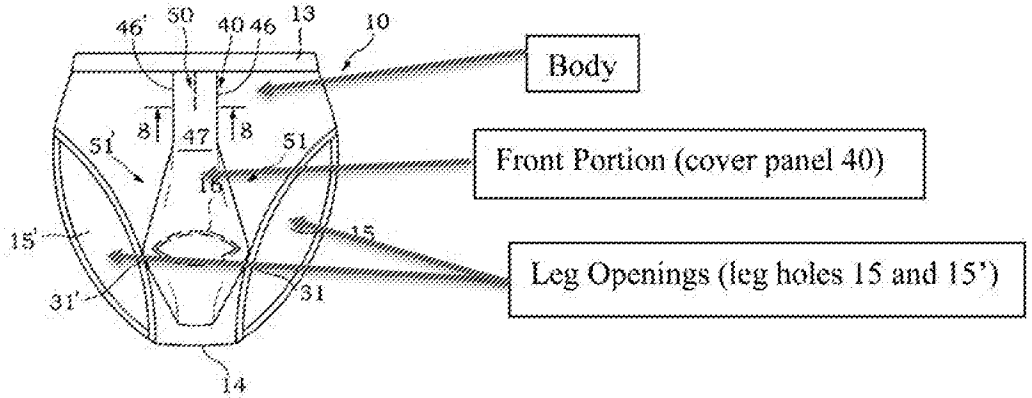 Fig.7 **Furthermore, the 9132 Show-It Brief includes a body including a front portion and having leg openings for a wearer's legs.** ***See,*** The "front portion" of the 9132 Show-It Brief is the central part of the body situated in front of the wearer of the 9132 Show-It Brief, shown in red fabric in the Show-It 2009 Line Sheet image below (and labeled "Front Portion" with an arrow) and shown in gray fabric in the March 6, 2009 Blog Entry image below (and labeled "Front Portion (in gray)" with an arrow).

Either Anticipation by U.S. Patent Publication No. 2004/0025218 (Published Feb. 12, 2004) or Obviousness In View of Andrew Christian Style No. 9132 (Show-It Brief) and 9133 (Show-It Boxer) and EP O 476 818 or the '369 Patent

Claim 1	Exemplary Disclosure in Prior Art
	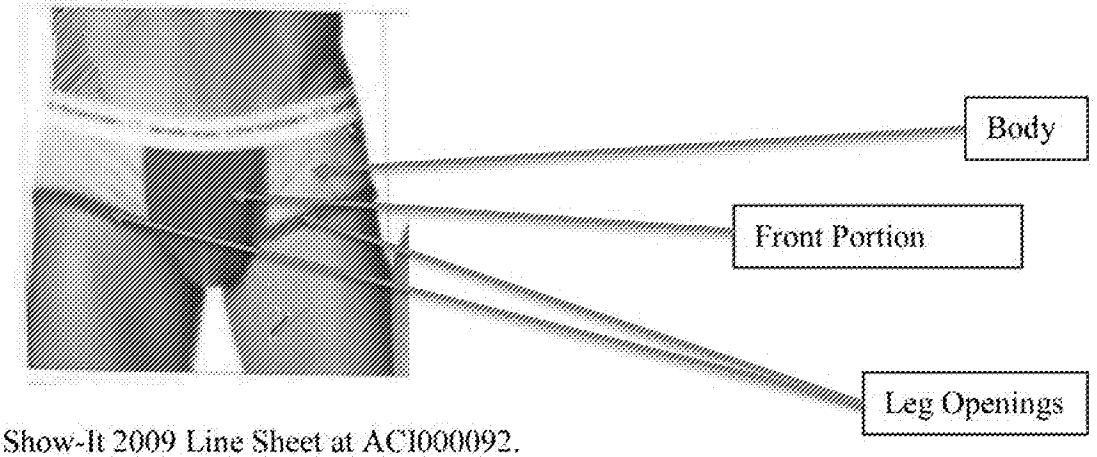 Show-It 2009 Line Sheet at ACI000092. 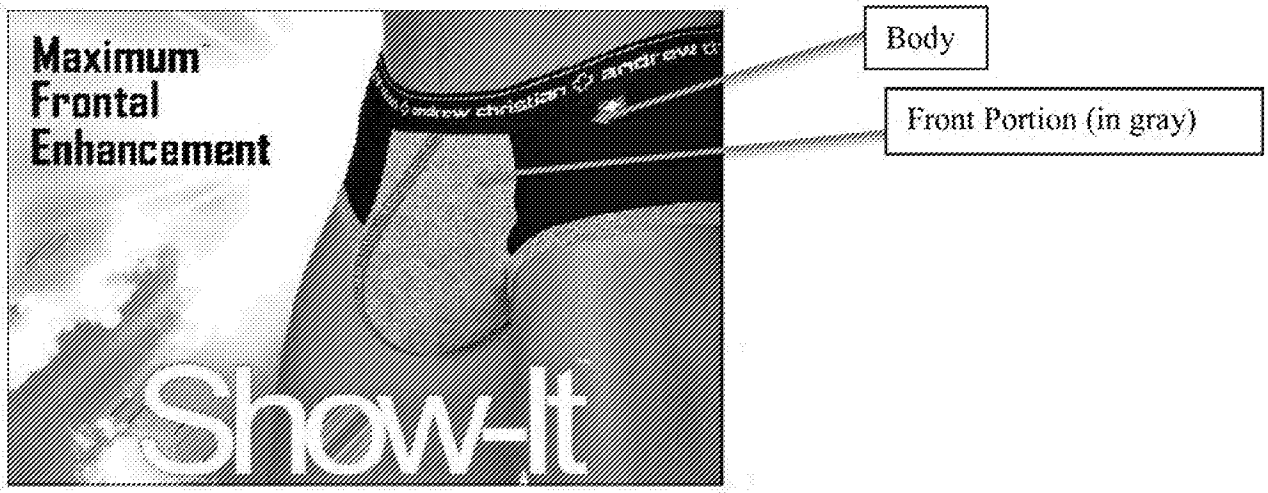 March 6, 2009 Blog Entry. **The 9133 Show-It Boxer includes a body including a front portion and having leg openings for a wearer's legs.** ***See,***

Claim 1	Exemplary Disclosure in Prior Art
	The "front portion" of the 9133 Show-It Boxer is the central part of the body situated in front of the wearer of the 9133 Show-It Boxer, shown in red fabric in the image below (and labeled "Front Portion" with an arrow). 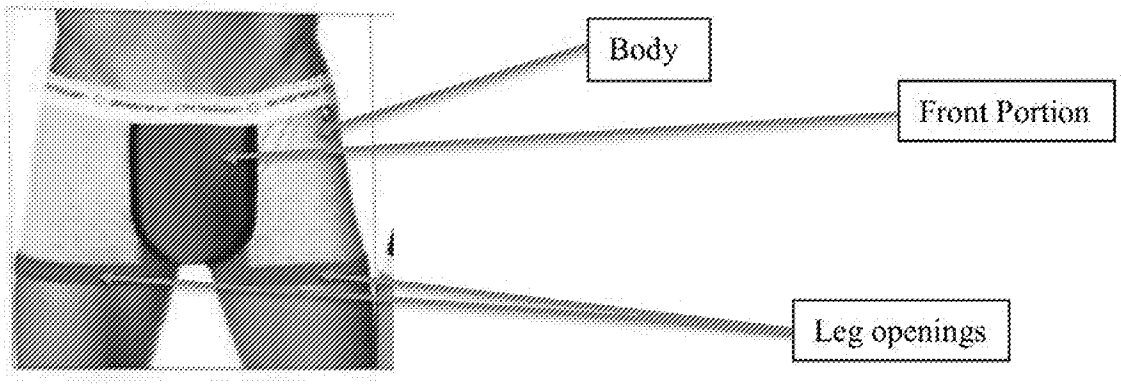 Show-It 2009 Line Sheet at ACI000092. To the extent Plaintiffs contend the '218 Publication does not expressly, implicitly, or inherently disclose a body including a front portion, one of ordinary skill in the art would, based on one's knowledge and the '218 Publication, understand how to modify the disclosure of the '218 Publication to meet this limitation. Alternatively, one of ordinary skill could modify the '218 Publication in view of the 9132 Show-It Brief/9133 Show-It Boxer (disclosure above) to meet this limitation.
[1.1b] the body including a crotch panel extending between the	**The '218 Publication discloses a body including a crotch panel extending between the leg openings and joined to the front portion along a first seam.** ***See,*** In particular, the '218 Publication discloses a crotch ("14") (the crotch panel) extending between the leg holes (the leg openings) and joined to the front portion at a seam (the first seam).

Either Anticipation by U.S. Patent Publication No. 2004/0025218 (Published Feb. 12, 2004) or Obviousness In View of Andrew Christian Style No. 9132 (Show-It Brief) and 9133 (Show-It Boxer) and EP O 476 818 or the '369 Patent

Claim 1	Exemplary Disclosure in Prior Art
leg openings and joined to the front portion along a first seam;	The first seam is the seam where the bottom edge of the cover panel (the front portion) is fixedly fastened to the crotch: "A men's undergarment having an opening in the front panel of the undergarment body thereof and a cover panel fastened to the undergarment body, the cover panel having top and bottom ends respectively fixedly fastened to waistband and crotch of the undergarment body" (Abstract) "[0015] FIG. 6 is an extended out view of the cover panel for the men's undergarment according to the second embodiment of the present invention." See also Figure 6. "[0021] Referring to FIG. 1, a men's undergarment in accordance with the present invention is shown comprised of an undergarment body 10 and a cover panel. The undergarment body 10 comprises a front panel 11, a back panel 12 (see FIG. 5), a waistband 13, and a crotch 14, defining two leg holes 15 and 15'." "[0022] FIGS. 2-5 show the first embodiment of the present invention. As illustrated, the cover panel 20 is an elongated piece of cloth, having a bottom center pleat 22 longitudinally upwardly extended from the bottom end thereof and two smoothly arched side flaps 21 and 21' symmetrically formed integral with two opposite lateral sides thereof near the bottom end. When fastened to the undergarment body 10, the upper part of the cover panel 20 defines with the undergarment body 10 a penis receiving space 23 above the opening 16 (see also FIG. 1) for receiving the user's penis, and the side flaps 21 and 21' define with the undergarment body 10 a scrotum receiving space 24 below the opening 16 for receiving the user's scrotum. . . . Further, the border areas of the side flaps 21 and 21' are respectively stitched to the undergarment body 10, forming stitched lines 31 and 31' that hold the cover panel 20 in the center position against biasing."

Either Anticipation by U.S. Patent Publication No. 2004/0025218 (Published Feb. 12, 2004) or Obviousness In View of Andrew Christian Style No. 9132 (Show-It Brief) and 9133 (Show-It Boxer) and EP O 476 818 or the '369 Patent

Claim 1	Exemplary Disclosure in Prior Art
	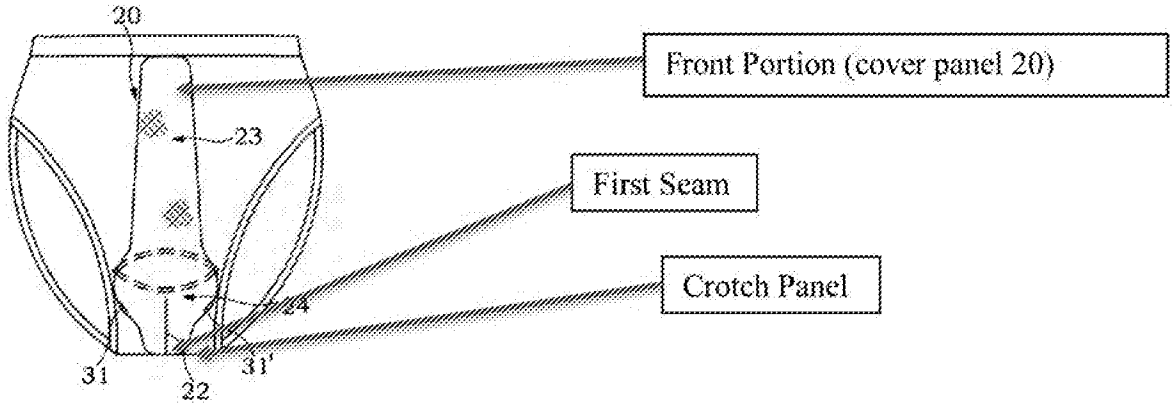 Fig.3 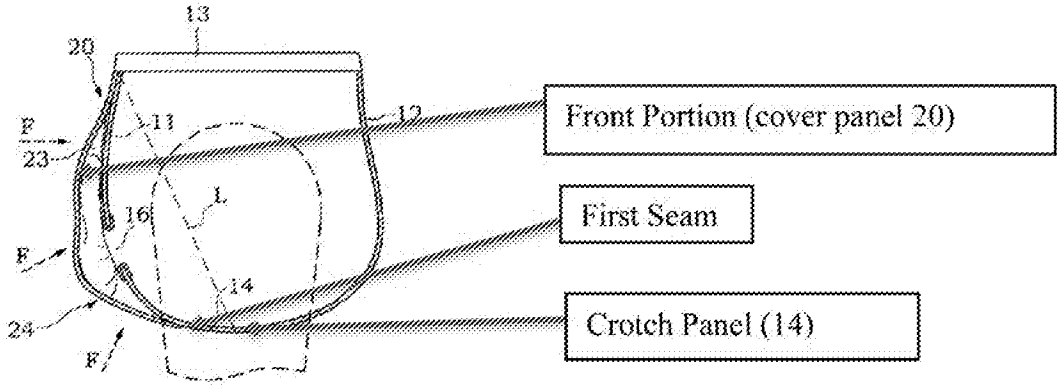 Fig.5

Either Anticipation by U.S. Patent Publication No. 2004/0025218 (Published Feb. 12, 2004) or Obviousness In View of Andrew Christian Style No. 9132 (Show-It Brief) and 9133 (Show-It Boxer) and EP O 476 818 or the '369 Patent

Claim 1	Exemplary Disclosure in Prior Art
	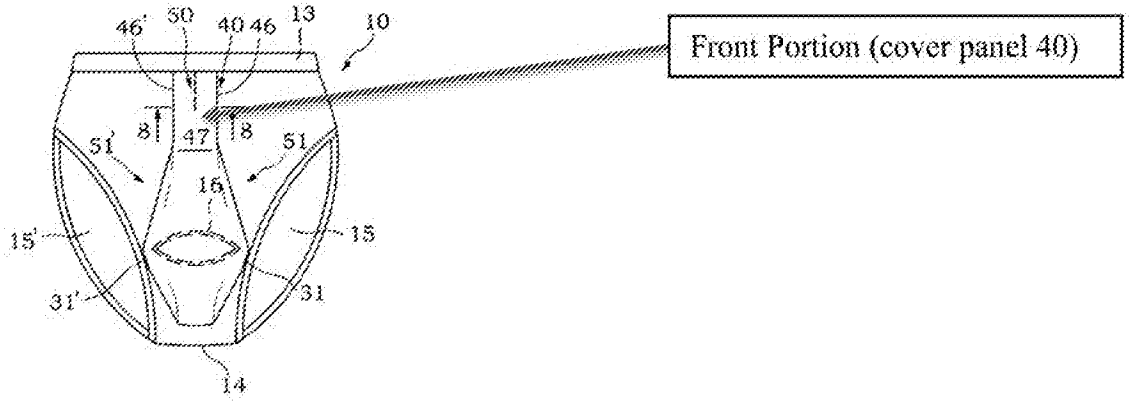 Fig.7 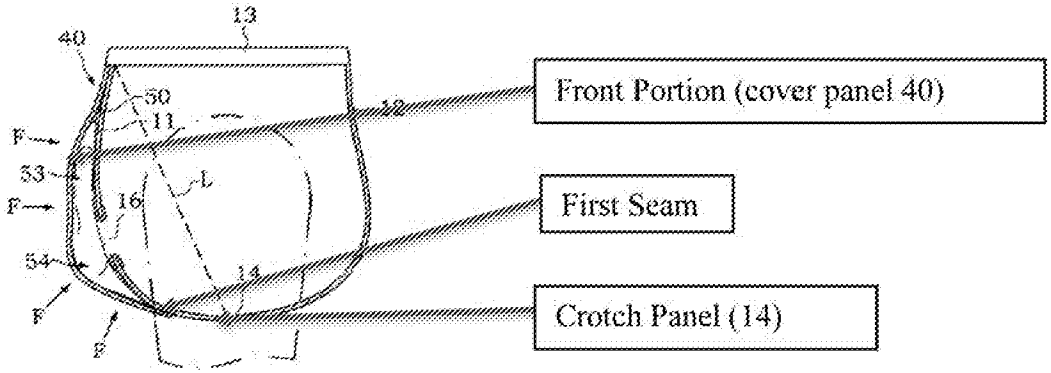 Fig.11

Claim 1	Exemplary Disclosure in Prior Art
	Furthermore, the 9132 Show-It Brief includes a body including a crotch panel extending between the leg openings and joined to the front portion along a first seam. ***See,*** The "crotch panel" of the 9132 Show-It Brief is the blue fabric panel shown in the image below, captured from ACI000038. The same "crotch panel" is shown in the Show-It Brief 9132 design drawing, as indicated by the arrow. 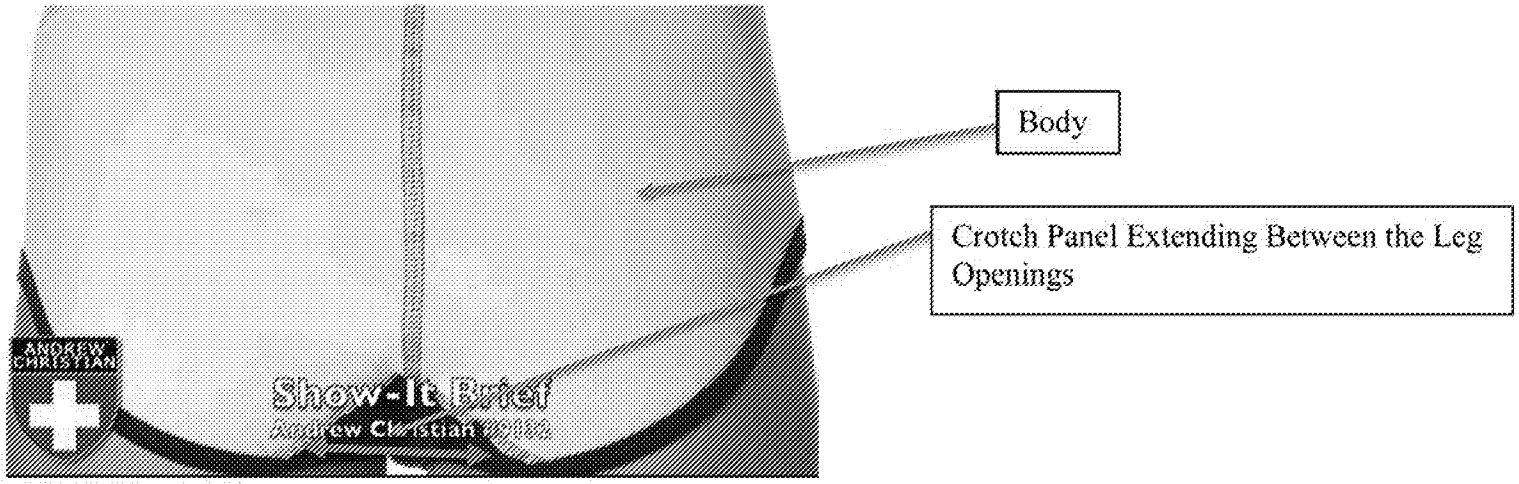 ACI000038 at 4:17. 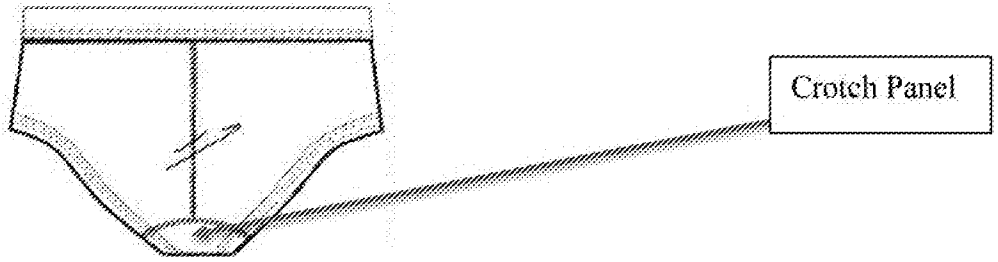 9132 design drawing ACI000021.

Either Anticipation by U.S. Patent Publication No. 2004/0025218 (Published Feb. 12, 2004) or Obviousness In View of Andrew Christian Style No. 9132 (Show-It Brief) and 9133 (Show-It Boxer) and EP O 476 818 or the '369 Patent

Claim 1	Exemplary Disclosure in Prior Art
	The "crotch panel," in red in the screenshots from ACI000040 below, is attached to the "front portion" of the 9132 Show-It Brief (also in red below) along the first seam. In the 9132 Show-It Brief, the "first seam" also attaches the "crotch panel" to the "stretch panel" (also in red) as shown in the screenshot below. 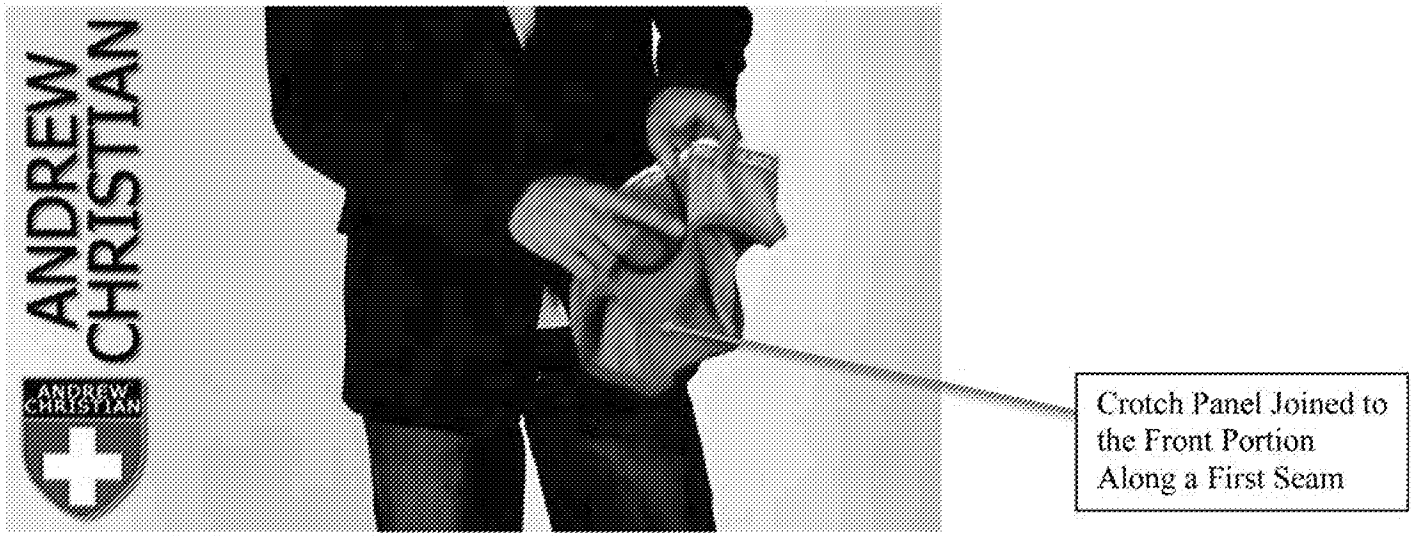 ACI000040 at 00:28.

Either Anticipation by U.S. Patent Publication No. 2004/0025218 (Published Feb. 12, 2004) or Obviousness In View of Andrew Christian Style No. 9132 (Show-It Brief) and 9133 (Show-It Boxer) and EP O 476 818 or the '369 Patent

Claim 1	Exemplary Disclosure in Prior Art
	 ACI000040 at 00:33. **The 9133 Show-It Boxer includes a body including a crotch panel extending between the leg openings and joined to the front portion along a first seam.** ***See,*** The "crotch panel" of the 9133 Show-It Boxer is the gray fabric panel shown in the screenshots from ACI000038 below, as indicated by the accompanying arrows. The same "crotch panel" is shown in the Show-It Boxer 9133 design drawing below.

Either Anticipation by U.S. Patent Publication No. 2004/0025218 (Published Feb. 12, 2004) or Obviousness In View of Andrew Christian Style No. 9132 (Show-It Brief) and 9133 (Show-It Boxer) and EP O 476 818 or the '369 Patent

Claim 1	Exemplary Disclosure in Prior Art
	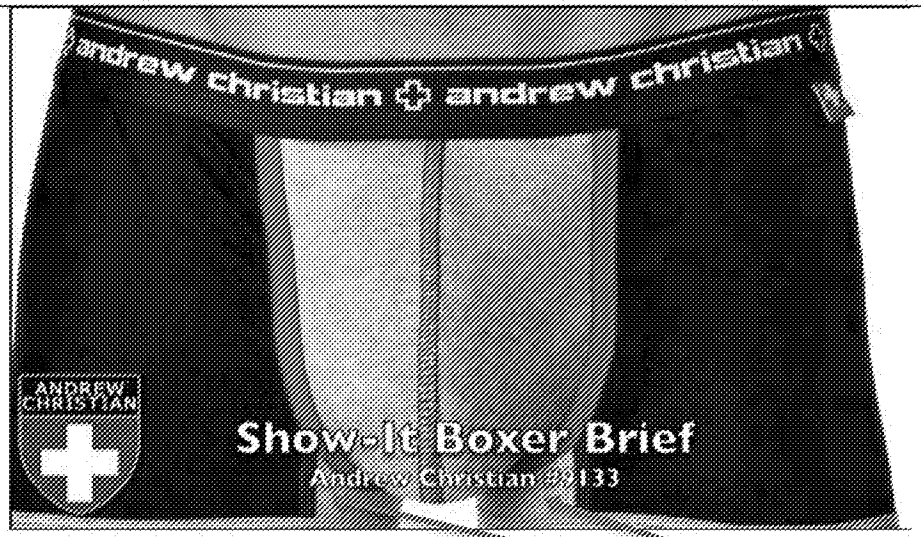 ACI000038 at 2:43. Crotch Panel Extending Between the Leg Openings

Either Anticipation by U.S. Patent Publication No. 2004/0025218 (Published Feb. 12, 2004) or Obviousness In View of Andrew Christian Style No. 9132 (Show-It Brief) and 9133 (Show-It Boxer) and EP O 476 818 or the '369 Patent

Claim 1	Exemplary Disclosure in Prior Art
	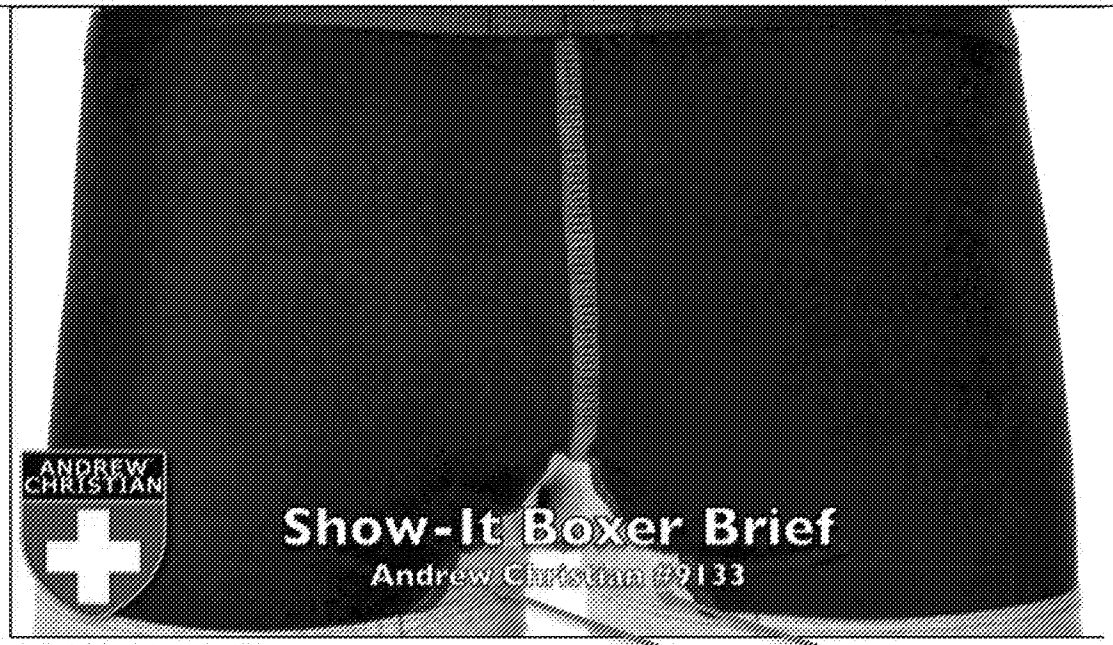 ACI000038 at 2:48. Crotch Panel Extending Between the Leg Openings

Either Anticipation by U.S. Patent Publication No. 2004/0025218 (Published Feb. 12, 2004) or Obviousness In View of Andrew Christian Style No. 9132 (Show-It Brief) and 9133 (Show-It Boxer) and EP O 476 818 or the '369 Patent

Claim 1	Exemplary Disclosure in Prior Art
	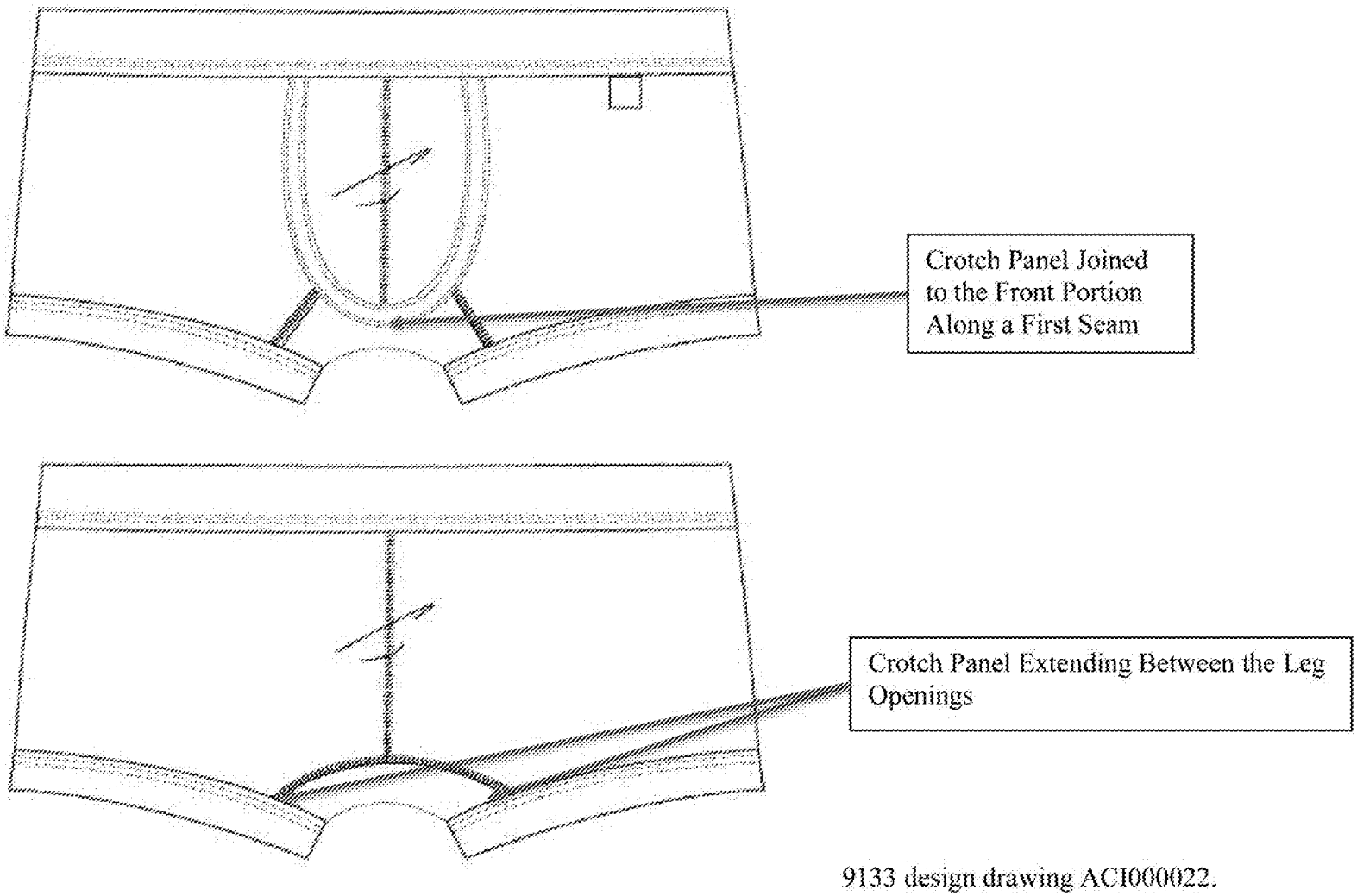 9133 design drawing ACI000022.

Claim 1	Exemplary Disclosure in Prior Art
[1.2] a waistband attached by a waistband seam at an upper edge of the body;	**The '218 Publication discloses a waistband attached by a waistband seam at an upper edge of the body.** ***See,*** In particular, the '218 Publication discloses a waistband ("13") attached by a seam (a waistband seam) at an upper edge of the undergarment body (the body). "[T]he cover panel having top and bottom ends . . . fixedly fastened to waistband" (Abstract) "[0021] . . . The cover panel is made of a piece of elastic, ventilating cloth (cotton cloth or spandex-contained meshed cloth), having top and bottom ends respectively fixedly fastened to the waistband 13 and the crotch 14." "[0023] . . . The top and bottom ends of the well-folded cover panel 40 are then respectively stitched to the waistband 13 and crotch 14 of the undergarment body 10." 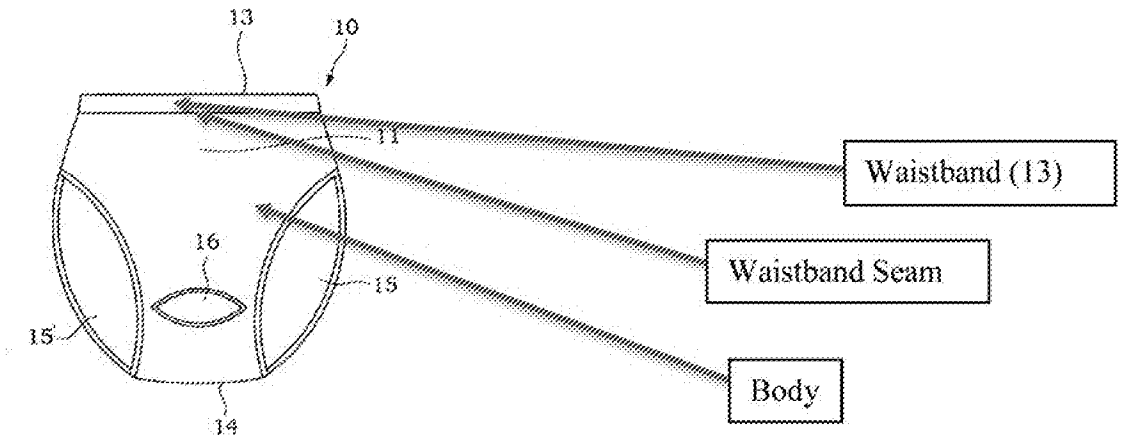 Fig. 1

Either Anticipation by U.S. Patent Publication No. 2004/0025218 (Published Feb. 12, 2004) or Obviousness In View of Andrew Christian Style No. 9132 (Show-It Brief) and 9133 (Show-It Boxer) and EP O 476 818 or the '369 Patent

Claim 1	Exemplary Disclosure in Prior Art
	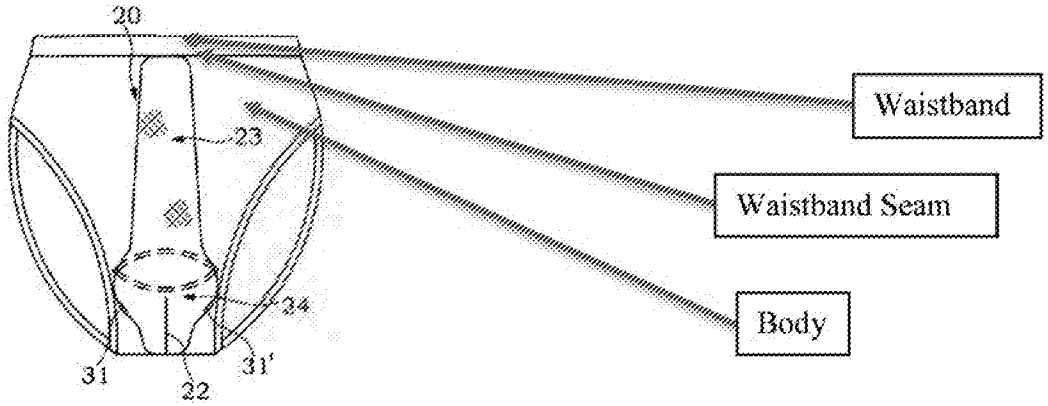 Fig.3 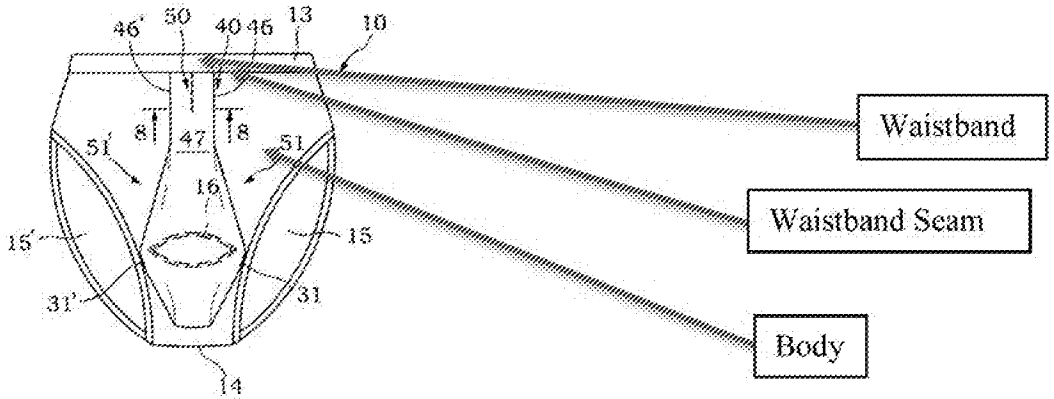 Fig.7

Claim 1	Exemplary Disclosure in Prior Art
	Furthermore, the 9132 Show-It Brief includes a waistband attached by a waistband seam at an upper edge of the body. ***See,*** The "waistband" of the 9132 Show-It Brief (with "Andrew Christian" printed on it) is attached by a seam (the "waistband seam") at the upper edge of the "body." In the leftmost image of the 9132 Show-It Brief shown below, the body is heather (gray) and red and the waistband is white with "Andrew Christian" printed in red. Similarly, an image shown in the March 6, 2009 Blog Entry depicts a waistband (with "Andrew Christian" printed on it) attached by a seam (the "waistband seam") at the upper edge of the body (shown in black and gray). Waistband Waistband Seam Body Show-It 2009 Line Sheet at ACI000092. 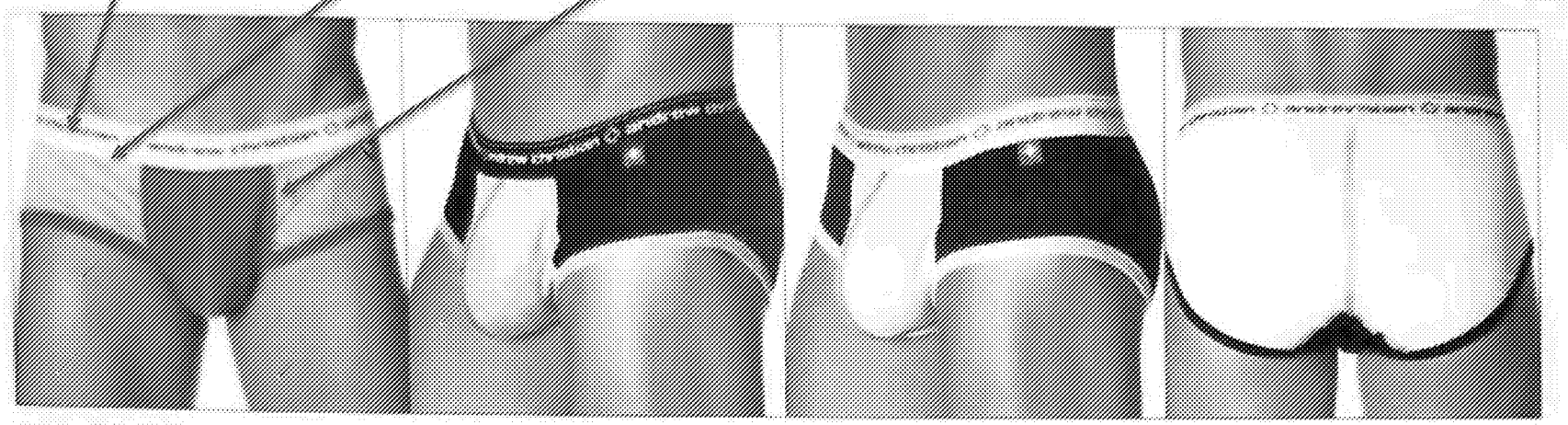 9132 Show-It Brief Sizes: XS-S-M-L-XL Colors: Heather, Black, Navy, White $12

Either Anticipation by U.S. Patent Publication No. 2004/0025218 (Published Feb. 12, 2004) or Obviousness In View of Andrew Christian Style No. 9132 (Show-It Brief) and 9133 (Show-It Boxer) and EP O 476 818 or the '369 Patent

Claim 1	Exemplary Disclosure in Prior Art
	 Waistband Waistband Seam Body March 6, 2009 Blog Entry.

Claim 1	Exemplary Disclosure in Prior Art
	The 9133 Show-It Boxer includes a waistband attached by a waistband seam at an upper edge of the body. ***See,*** The "waistband" of the 9133 Show-It Boxer (with "Andrew Christian" printed on it) is attached by a seam (the "waistband seam") at the upper edge of the "body." In the leftmost image of the 9133 Show-It Boxer shown below, the body is heather (gray) and red and the waistband is white with "Andrew Christian" printed in red. The 9133 design drawing also shows a waistband (labeled with an arrow) connected to a body (labeled with an arrow) at a waistband seam (labeled with an arrow). 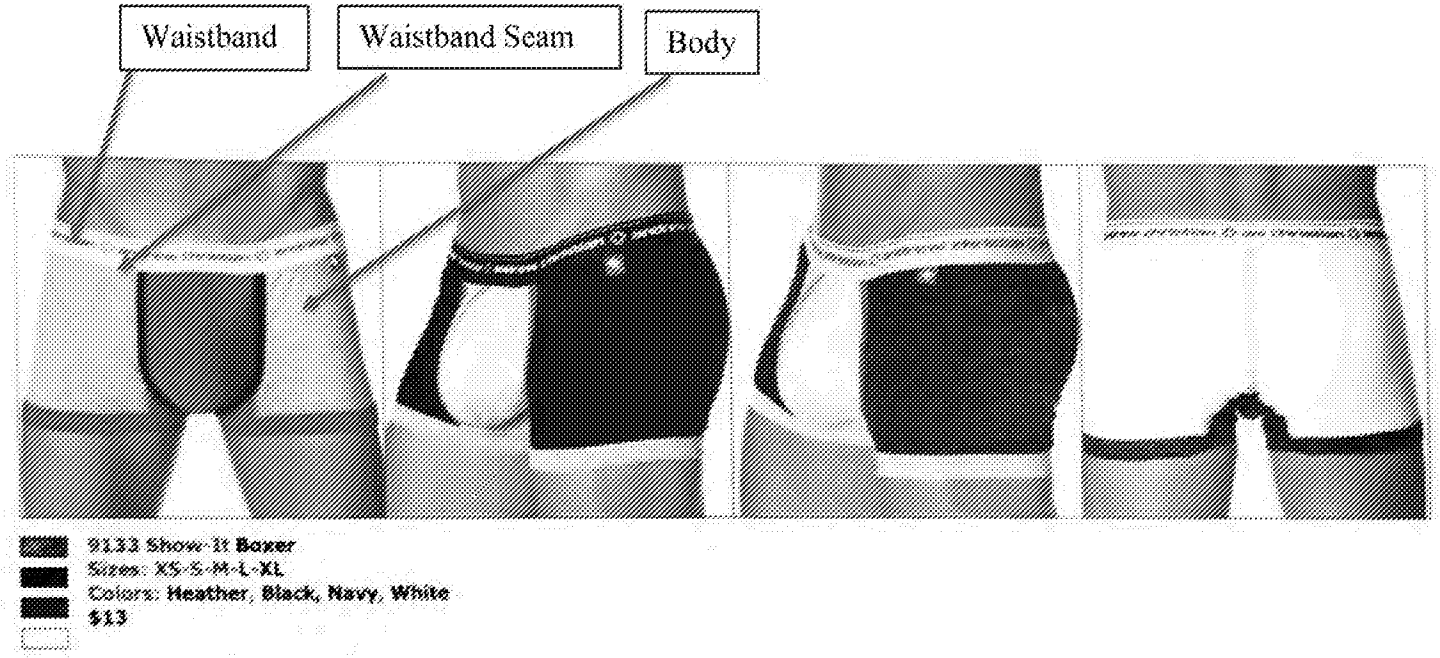 Show-It 2009 Line Sheet at ACI000092.

Either Anticipation by U.S. Patent Publication No. 2004/0025218 (Published Feb. 12, 2004) or Obviousness In View of Andrew Christian Style No. 9132 (Show-It Brief) and 9133 (Show-It Boxer) and EP O 476 818 or the '369 Patent

Claim 1	Exemplary Disclosure in Prior Art
	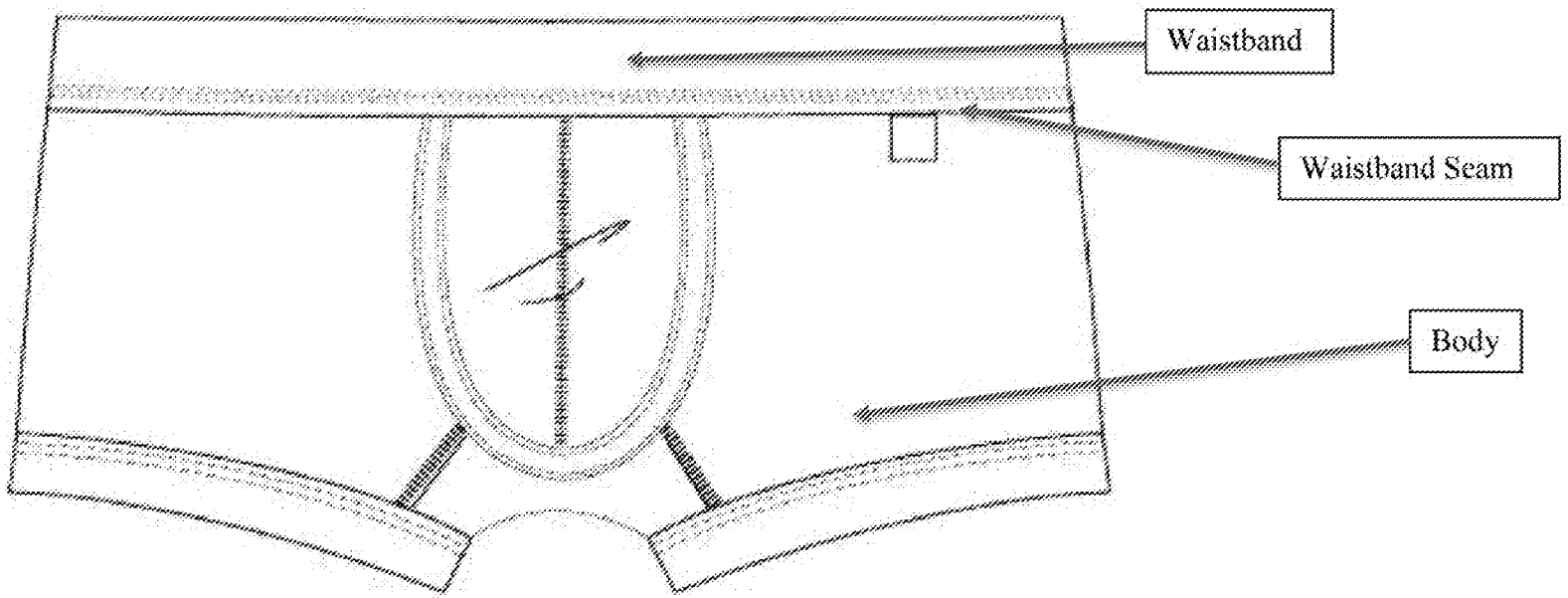 9133 design drawing ACI000022.
[1.3a] a stretch panel attached to the body inside the front portion,	**The '218 Publication discloses a stretch panel attached to the body inside the front portion.** ***See,*** In particular, the '218 Publication discloses that the cover panel (the front portion) attaches to the undergarment body, above at the waistband seam (top location), below at a seam at the crotch (bottom location), and seams on the sides via side flaps (side seams), which collectively define a space of the undergarment body with an opening for the wearer's penis and scrotum (stretch panel) inside of the front portion. "[0009] The cover panel has top and bottom ends respectively fixedly fastened to the waistband and the crotch . . . ." "[0021] . . . The cover panel is made of a piece of elastic, ventilating cloth (cotton cloth or spandex-contained meshed cloth), having top and bottom ends respectively fixedly fastened to the waistband 13 and the crotch 14."

Either Anticipation by U.S. Patent Publication No. 2004/0025218 (Published Feb. 12, 2004) or Obviousness In View of Andrew Christian Style No. 9132 (Show-It Brief) and 9133 (Show-It Boxer) and EP O 476 818 or the '369 Patent

Claim 1	Exemplary Disclosure in Prior Art
	"[0022] FIGS. 2-5 show the first embodiment of the present invention. As illustrated, the cover panel 20 is an elongated piece of cloth, having a bottom center pleat 22 longitudinally upwardly extended from the bottom end thereof and two smoothly arched side flaps 21 and 21' symmetrically formed integral with two opposite lateral sides thereof near the bottom end. When fastened to the undergarment body 10, the upper part of the cover panel 20 defines with the undergarment body 10 a penis receiving space 23 above the opening 16 (see also FIG. 1) for receiving the user's penis, and the side flaps 21 and 21' define with the undergarment body 10a scrotum receiving space 24 below the opening 16 for receiving the user's scrotum. Further, because of the effect of the bottom center pleat 22, the lower part of the cover panel 20 protrudes forwards from the undergarment body 10, forming a three-dimensional status. Further, the border areas of the side flaps 21 and 21' are respectively stitched to the undergarment body 10, forming stitched lines 31 and 31' that hold the cover panel 20 in the center position against biasing." 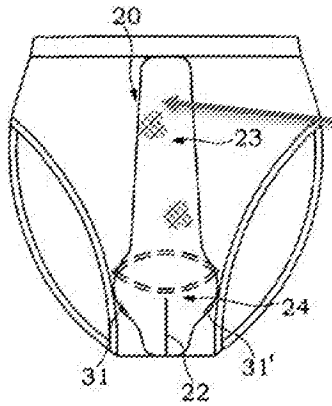 Fig.3 Front Portion (Stretch Panel is behind the Front Portion (cover panel 20), with the top edge defined by the waistband seam (top location), the bottom edge defined by the first seam (the bottom location), and the side edges defined by the side flaps 20 and 20')

Either Anticipation by U.S. Patent Publication No. 2004/0025218 (Published Feb. 12, 2004) or Obviousness In View of Andrew Christian Style No. 9132 (Show-It Brief) and 9133 (Show-It Boxer) and EP O 476 818 or the '369 Patent

Claim 1	Exemplary Disclosure in Prior Art
	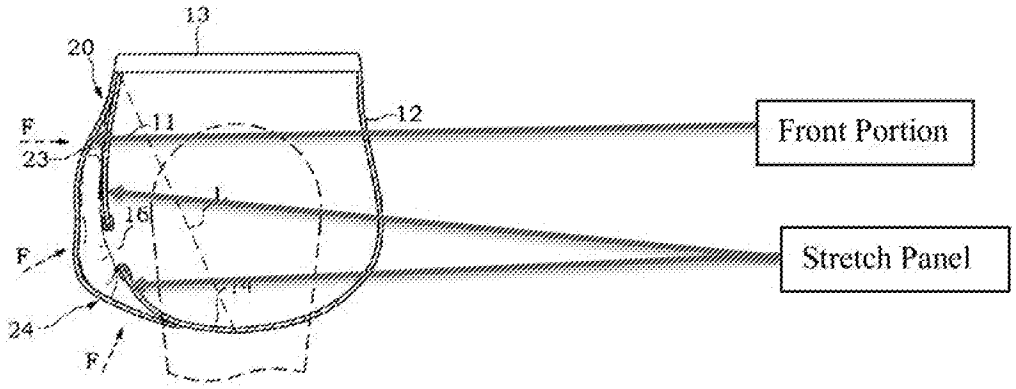 Fig.5

Either Anticipation by U.S. Patent Publication No. 2004/0025218 (Published Feb. 12, 2004) or Obviousness In View of Andrew Christian Style No. 9132 (Show-It Brief) and 9133 (Show-It Boxer) and EP O 476 818 or the '369 Patent

Claim 1	Exemplary Disclosure in Prior Art
	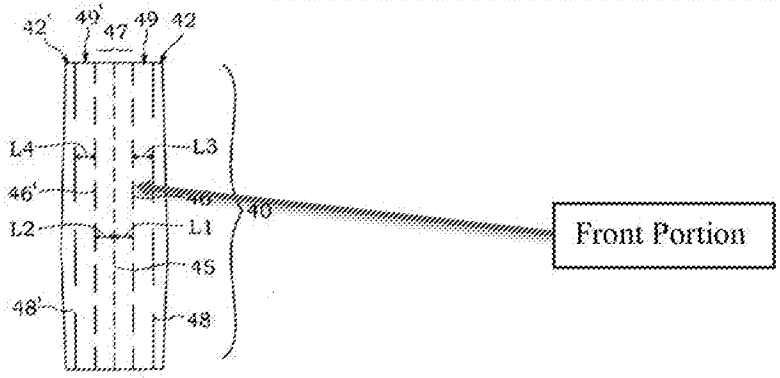 Fig.6

Either Anticipation by U.S. Patent Publication No. 2004/0025218 (Published Feb. 12, 2004) or Obviousness In View of Andrew Christian Style No. 9132 (Show-It Brief) and 9133 (Show-It Boxer) and EP O 476 818 or the '369 Patent

Claim 1	Exemplary Disclosure in Prior Art
	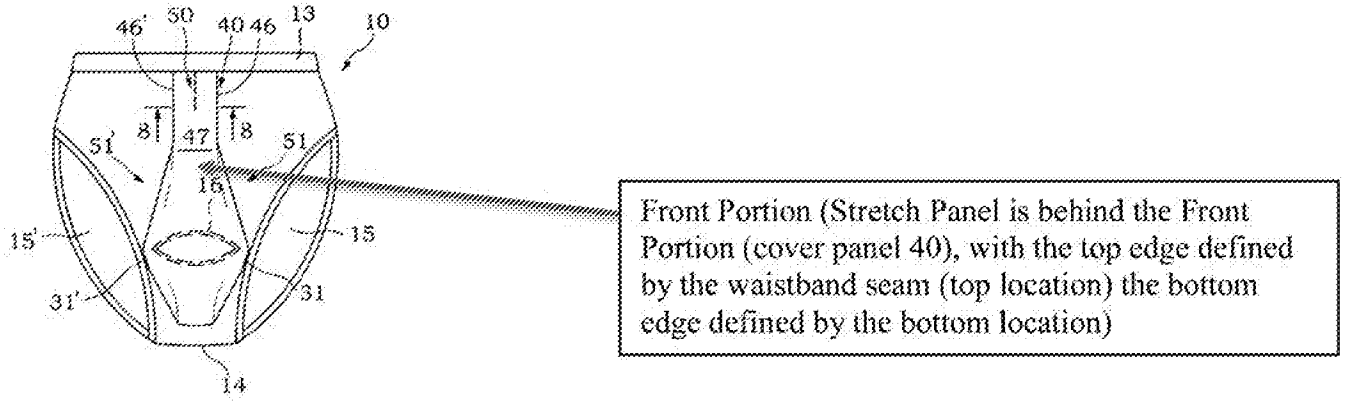 Fig.7 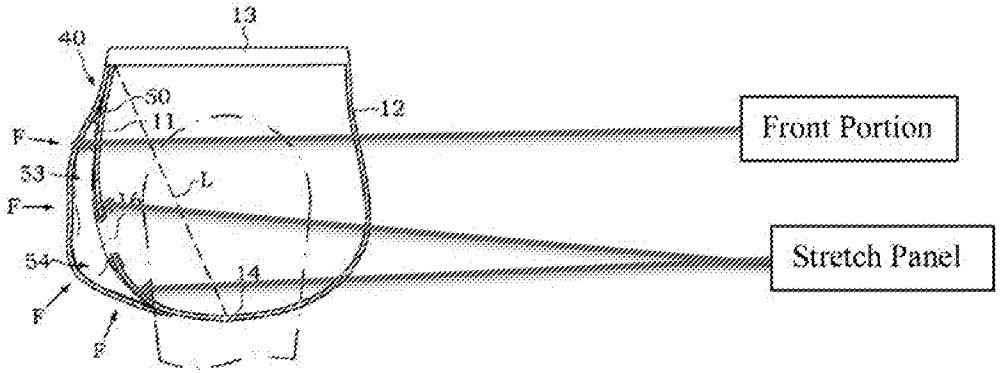 Fig.11

Claim 1	Exemplary Disclosure in Prior Art
	Furthermore, the 9132 Show-It Brief includes a stretch panel attached to the body inside the front portion. ***See,*** The 9132 Show-It Brief includes a "stretch panel" attached to the body inside the "front portion" along the waistband seam, first seam, and side seams. The "stretch panel" of the 9132 Show-It Brief is referred to as the "Comfy Cup" or the "inner cup" in descriptions of the 9132 Show-It Brief. 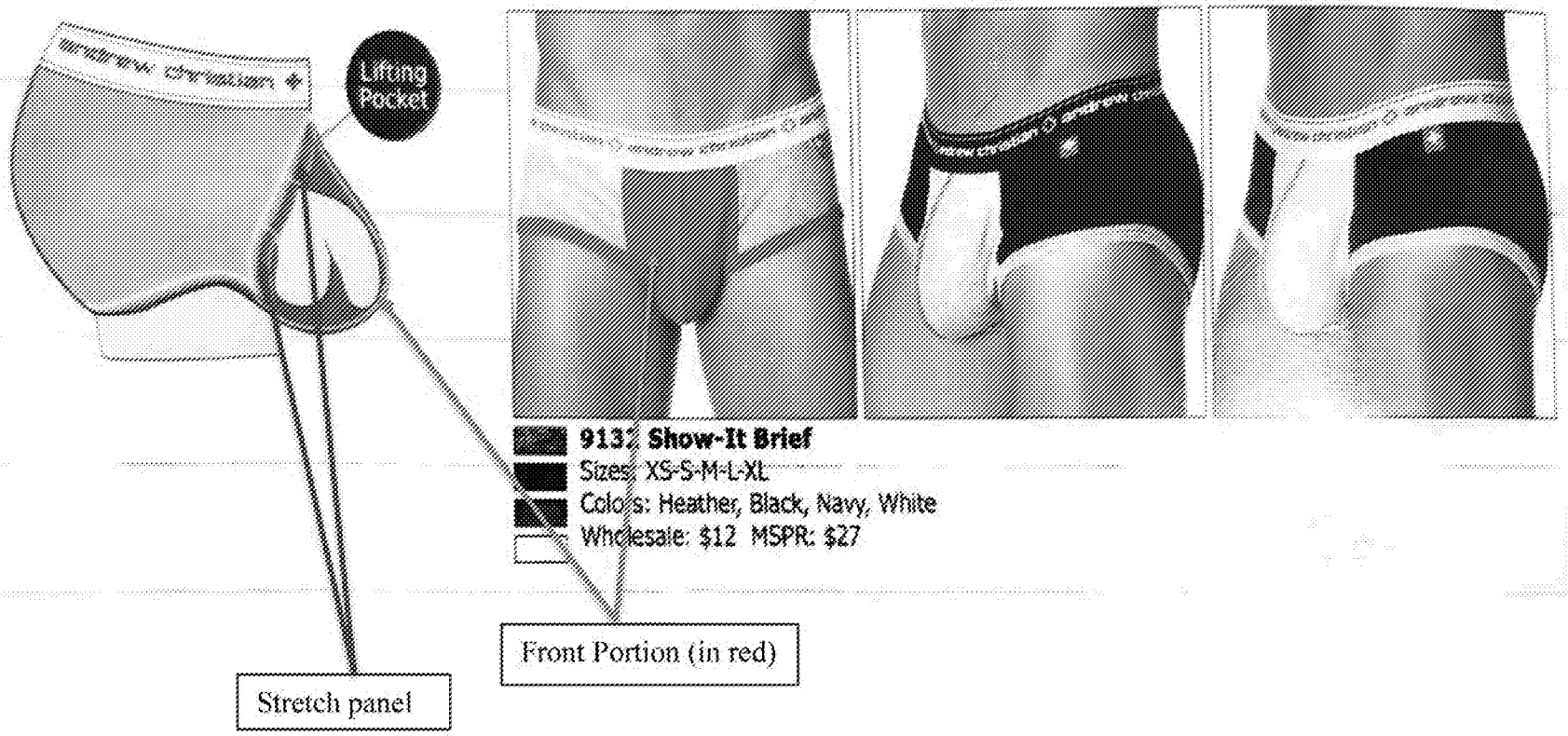 "Our Comfy Cup™ cradles and lifts…"

Claim 1	Exemplary Disclosure in Prior Art
	Show-It 2009-2010 Catalog at ACI000094. *See also* March 11, 2009 Blog Entry for identical side view of 9132 Show-It Brief. "Show-It Technology 2.0 features a hidden "comfy cup" [the Stretch Panel] that gently lifts and presents the package to the front. The horseshoe shaped inner cup [the Stretch Panel] is lined by soft elastic that gently aids in the lifting…" March 2009 Press Release. *See also* March 6, 2009 Blog Entry and March 11, 2009 Blog Entry for the same description. 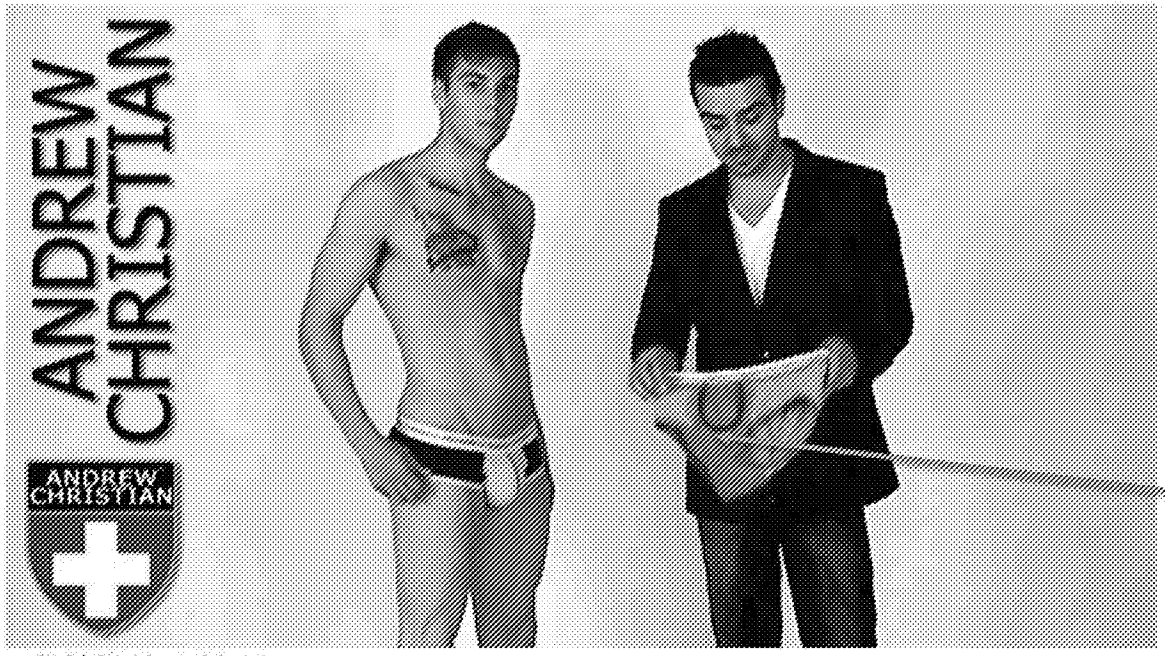 ACI000040 at 00:14. Stretch Panel (the red inner cup or comfy cup) attached to the Body inside the Front Portion

Either Anticipation by U.S. Patent Publication No. 2004/0025218 (Published Feb. 12, 2004) or Obviousness In View of Andrew Christian Style No. 9132 (Show-It Brief) and 9133 (Show-It Boxer) and EP O 476 818 or the '369 Patent

Claim 1	Exemplary Disclosure in Prior Art
	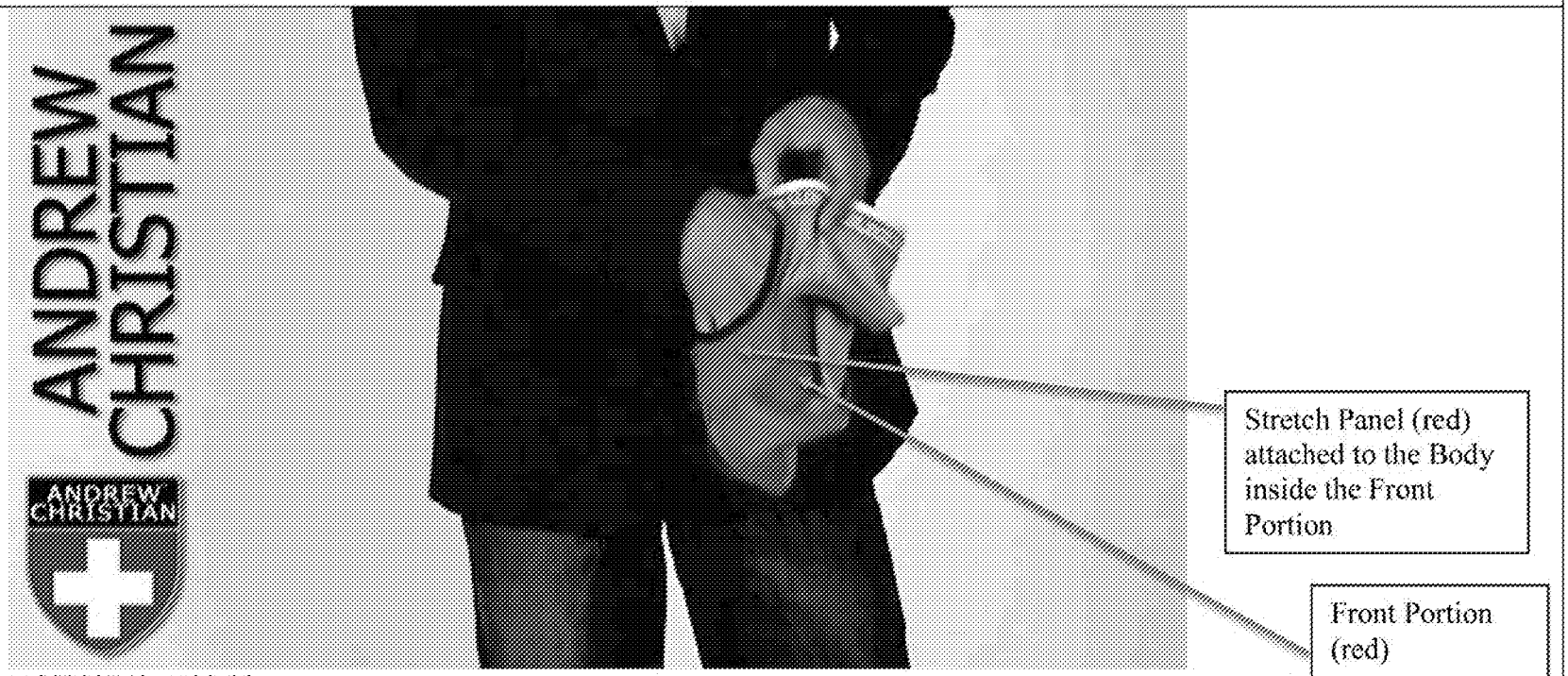 ACI000040 at 00:22. **The 9133 Show-It Boxer includes a stretch panel attached to the body inside the front portion.** ***See,*** The 9133 Show-It Boxer includes a "stretch panel" attached to the body inside the "front portion" along the waistband seam, first seam, and side seams. The "stretch panel" of the 9133 Show-It Boxer is referred to as the "Comfy Cup" or the "inner cup" in descriptions of the 9133 Show-It Boxer. "Our Comfy Cup™ cradles and lifts…" Show-It 2009 Line Sheet at ACI000092 (describing both the 9132 Show-It Brief and the 9133 Show-It Boxer).

Claim 1	Exemplary Disclosure in Prior Art
	"Show-It Technology 2.0 features a hidden "comfy cup" [the Stretch Panel] that gently lifts and presents the package to the front. The horseshoe shaped inner cup [the Stretch Panel] is lined by soft elastic that gently aids in the lifting…" March 2009 Press Release. *See also* March 6, 2009 Blog Entry and March 11, 2006 Blog Entry for the same description. To the extent Plaintiffs contend the '218 Publication does not expressly, implicitly, or inherently disclose a stretch panel attached to the body inside the front portion, one of ordinary skill would, based on one's knowledge and the '218 Publication, understand how to modify the disclosure of the '218 Publication to meet this limitation. Alternatively, one of ordinary skill could modify the '218 Publication in view of the 9132 Show-It Brief/9133 Show-It Boxer (disclosure above) to meet this limitation.
[1.3b] the stretch panel comprising a sheet of elastically resilient four-way stretch material	**The '218 Publication discloses a stretch panel comprising a sheet of elastically resilient four-way stretch material. *See*,** The only material disclosed by the '218 Publication is elastic, ventilating cloth, specifically cotton or spandex-contained mesh cloth (elastically resilient four-way stretch material). A "spandex-contained mesh cloth" is a fabric capable of stretching in each of two different directions with substantial elastic recovery toward its pre-stretching size and shape. "[0021] . . . The cover panel is made of a piece of elastic, ventilating cloth (cotton cloth or spandex-contained meshed cloth), having top and bottom ends respectively fixedly fastened to the waistband 13 and the crotch 14." **Furthermore, the 9132 Show-It Brief includes a stretch panel comprising a sheet of elastically resilient four-way stretch material. *See*,** The 9132 Show-It Brief's "stretch panel" comprises [redacted] an elastically resilient four way stretch material [redacted] capable of stretching in each of two different directions with substantial elastic recovery toward its pre-stretching size and shape). February 5, 2009 Pattern Sheets at ACI000152. Moreover, the "Show-It Technology 2.0 [of the 9132 Show-It Brief] features a hidden "comfy cup" [Stretch Panel] that gently lifts and presents the package to the front. The horseshoe shaped inner cup [the Stretch Panel] is lined by soft elastic that gently aids in the

Claim 1	Exemplary Disclosure in Prior Art
attached to the body at a top location, a bottom edge attached to the body at a bottom location, side edges attached to the body at side seams extending substantially continuously along either side of the front portion and	In particular, the '218 Publication discloses that the cover panel (the front portion) attaches to the undergarment body, above at the waistband seam (top location), below at a seam at the crotch (bottom location), and seams on the sides via side flaps (side seams), which collectively define a space of the undergarment body with an opening for the wearer's penis and scrotum (the stretch panel) inside of the front portion. The '218 Publication thereby discloses that the stretch panel is attached at top location (via the waistband seam), bottom location (via first seam), and along side seams extending substantially continuously both sides of the front portion. "[0009] The cover panel has top and bottom ends respectively fixedly fastened to the waistband and the crotch . . . ." "[0022] FIGS. 2-5 show the first embodiment of the present invention. As illustrated, the cover panel 20 is an elongated piece of cloth, having a bottom center pleat 22 longitudinally upwardly extended from the bottom end thereof and two smoothly arched side flaps 21 and 21' symmetrically formed integral with two opposite lateral sides thereof near the bottom end. When fastened to the undergarment body 10, the upper part of the cover panel 20 defines with the undergarment body 10 a penis receiving space 23 above the opening 16 (see also FIG. 1) for receiving the user's penis, and the side flaps 21 and 21' define with the undergarment body 10a scrotum receiving space 24 below the opening 16 for receiving the user's scrotum. Further, because of the effect of the bottom center pleat 22, the lower part of the cover panel 20 protrudes forwards from the undergarment body 10, forming a three-dimensional status. Further, the border areas of the side flaps 21 and 21' are respectively stitched to the undergarment body 10, forming stitched lines 31 and 31' that hold the cover panel 20 in the center position against biasing." "[0024] Referring to FIGS. 4, 5, 9, 10 and 11, when the undergarment put on the user's body, the undergarment body 10 and the cover panel 20 or 40 are stretched outwards into a three-dimensional status. At this time, the elastic material property of the cover panel 20 or 40 produces components of force F in direction toward the imaginary straight line L between the waistband and the crotch, keeping the cover panel 20 or 40 closely attached to the lower part of the user's abdomen." "[0025] Referring to FIGS. 4 and 5, when the undergarment of the first embodiment of the present invention put on the user's body, the user's penis and scrotum are extended out of the undergarment body 10 through the opening 16, keeping the scrotum received in the scrotum receiving space 24 and the penis received in the penis receiving space 23. When the user adjusted the undergarment to the best fit position, the cover panel 20 is forced by its elastic material property to cover the penis and to secure the penis to the inside of the penis receiving space 23."

Either Anticipation by U.S. Patent Publication No. 2004/0025218 (Published Feb. 12, 2004) or Obviousness In View of Andrew Christian Style No. 9132 (Show-It Brief) and 9133 (Show-It Boxer) and EP O 476 818 or the '369 Patent

Claim 1	Exemplary Disclosure in Prior Art
	"[0027] The elastic material property and the effect of the stitched line 50 cause the side cover portions 49 and 49' to hold the user's penis positively in the penis receiving space 53 in vertical, preventing the user's penis from falling to the outside of the cover panel 40." "The men's undergarment as claimed in claim 1, wherein said cover panel has an upper part, which defines with said undergarment body said penis receiving space, and two smoothly arched side flaps symmetrically bilaterally formed integral with a lower part thereof and defining with said undergarment body said scrotum receiving space." (Claim 4) "The men's undergarment as claimed in claim 5, wherein the outer portion of each of said arched side flap is respectively stitched to said undergarment body, forming a respective stitched line." (Claim 6) 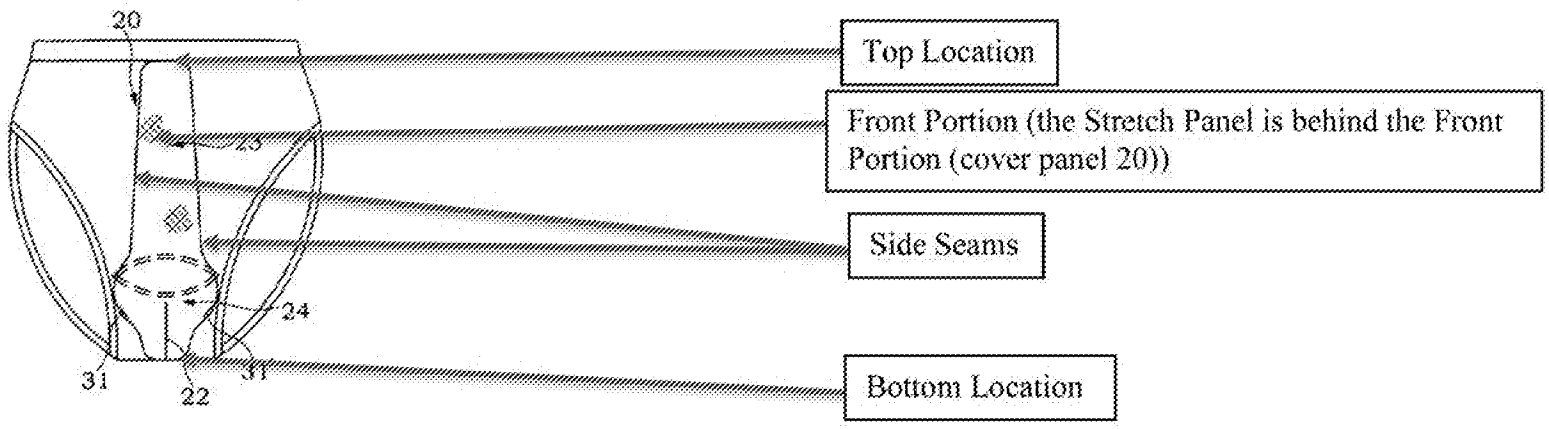 Fig.3

Either Anticipation by U.S. Patent Publication No. 2004/0025218 (Published Feb. 12, 2004) or Obviousness In View of Andrew Christian Style No. 9132 (Show-It Brief) and 9133 (Show-It Boxer) and EP O 476 818 or the '369 Patent

Claim 1	Exemplary Disclosure in Prior Art
	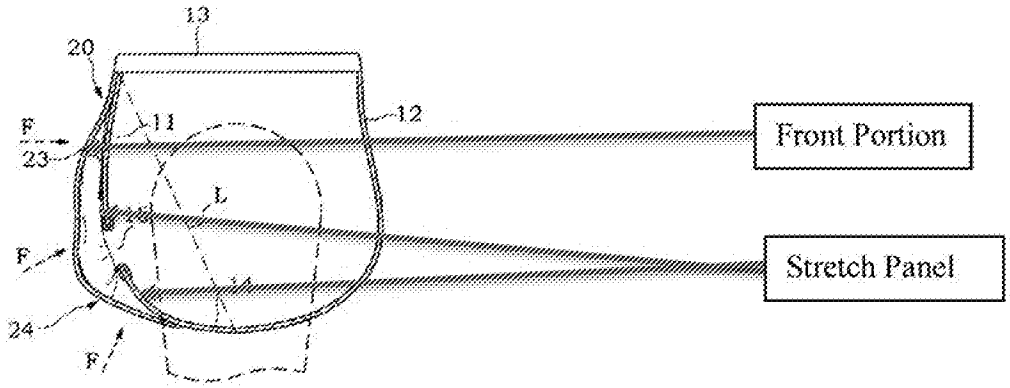 Fig.5

Either Anticipation by U.S. Patent Publication No. 2004/0025218 (Published Feb. 12, 2004) or Obviousness In View of Andrew Christian Style No. 9132 (Show-It Brief) and 9133 (Show-It Boxer) and EP O 476 818 or the '369 Patent

Claim 1	Exemplary Disclosure in Prior Art
	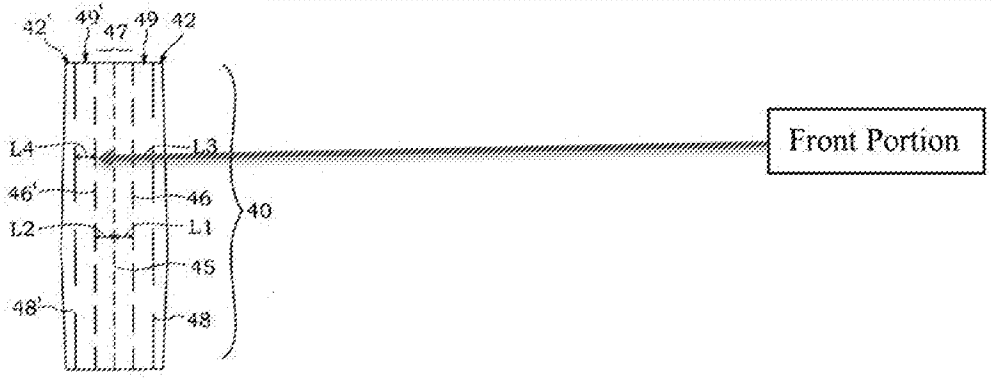 Fig.6

Either Anticipation by U.S. Patent Publication No. 2004/0025218 (Published Feb. 12, 2004) or Obviousness In View of Andrew Christian Style No. 9132 (Show-It Brief) and 9133 (Show-It Boxer) and EP O 476 818 or the '369 Patent

Claim 1	Exemplary Disclosure in Prior Art
	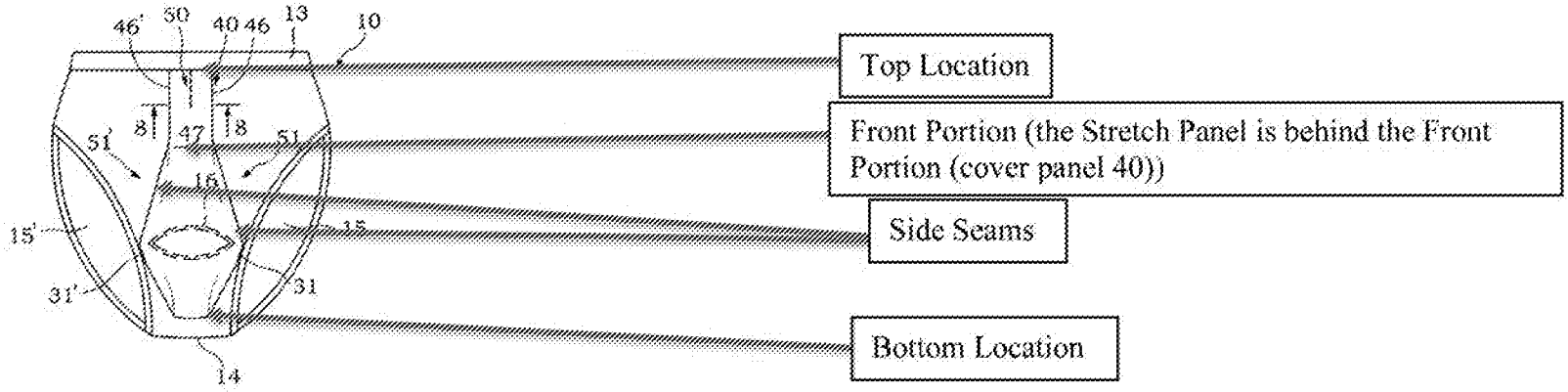 Fig.7 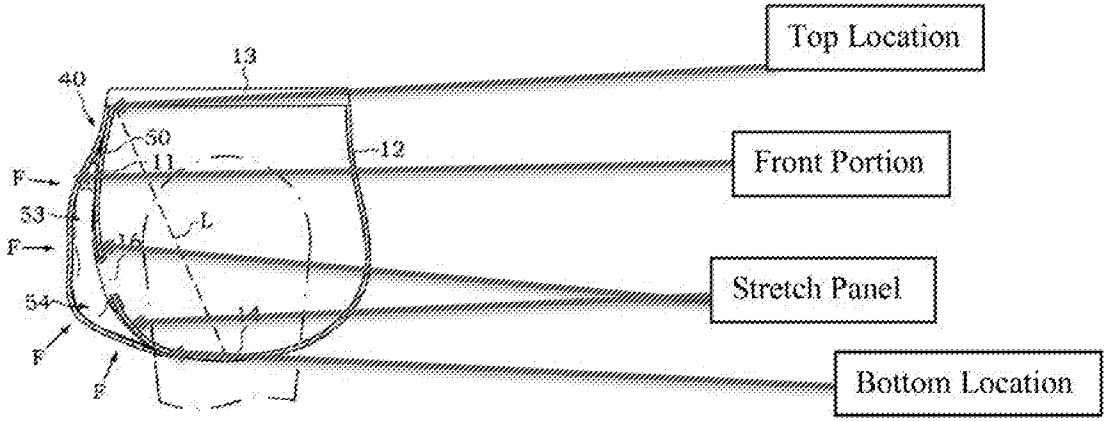 Fig.11

Claim 1	Exemplary Disclosure in Prior Art
	Furthermore, the 9132 Show-It Brief includes a stretch panel having a top edge attached to the body at a top location, a bottom edge attached to the body at a bottom location, side edges attached to the body at side seams extending substantially continuously along either side of the front portion. ***See,*** The 9132 Show-It Brief's "stretch panel" (the inner cup or comfy cup) has a top edge attached to the body at the waistband seam (the top location), a bottom edge attached to the body at the first seam (the bottom location), and side edges attached to the body at side seams extending continuously along either side of the "front portion," as shown in the screen shot from ACI000040 and the images from the Show-It 2009-2010 Catalog below. 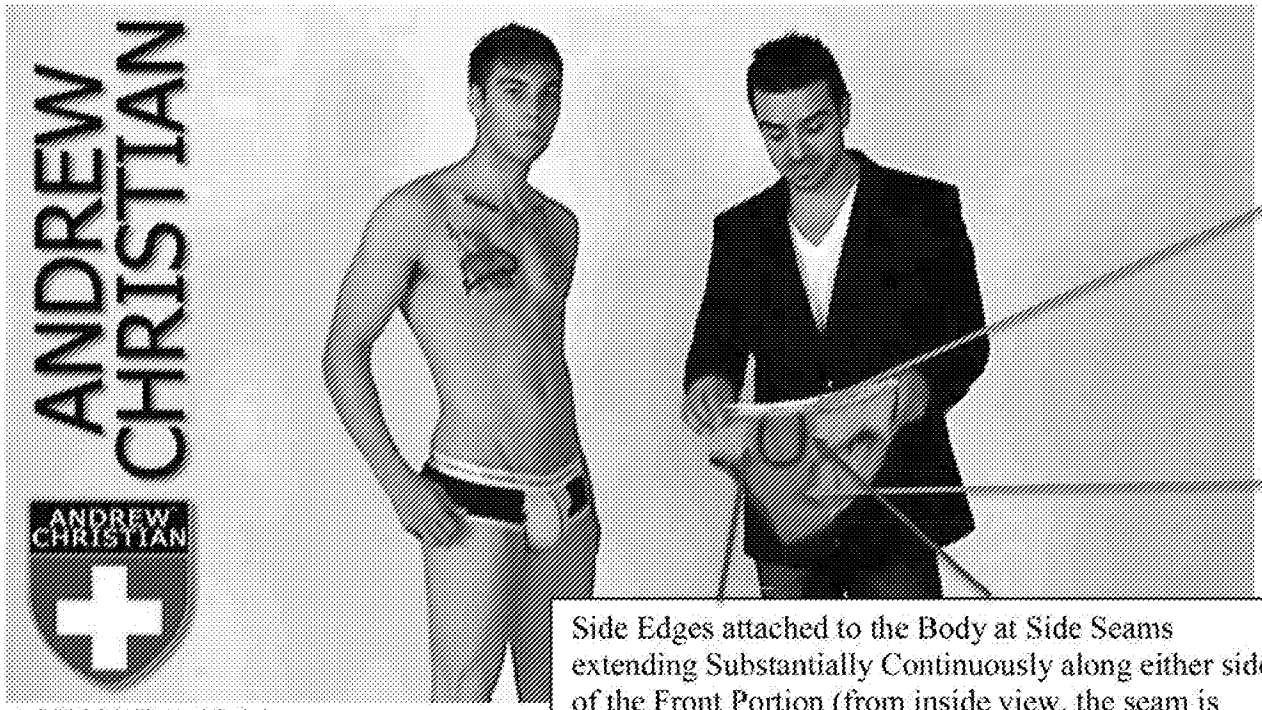 ACI000040 at 00:14. Top Edge of Stretch Panel Attached to the Body at a Top Location (the waistband seam) Bottom Edge of Stretch Panel Attached to the Body at a Bottom Location (the first seam) Side Edges attached to the Body at Side Seams extending Substantially Continuously along either side of the Front Portion (from inside view, the seam is between the red stretch panel and gray body, and the same seams run along the sides of the front portion)

Either Anticipation by U.S. Patent Publication No. 2004/0025218 (Published Feb. 12, 2004) or Obviousness In View of Andrew Christian Style No. 9132 (Show-It Brief) and 9133 (Show-It Boxer) and EP O 476 818 or the '369 Patent

Claim 1	Exemplary Disclosure in Prior Art
	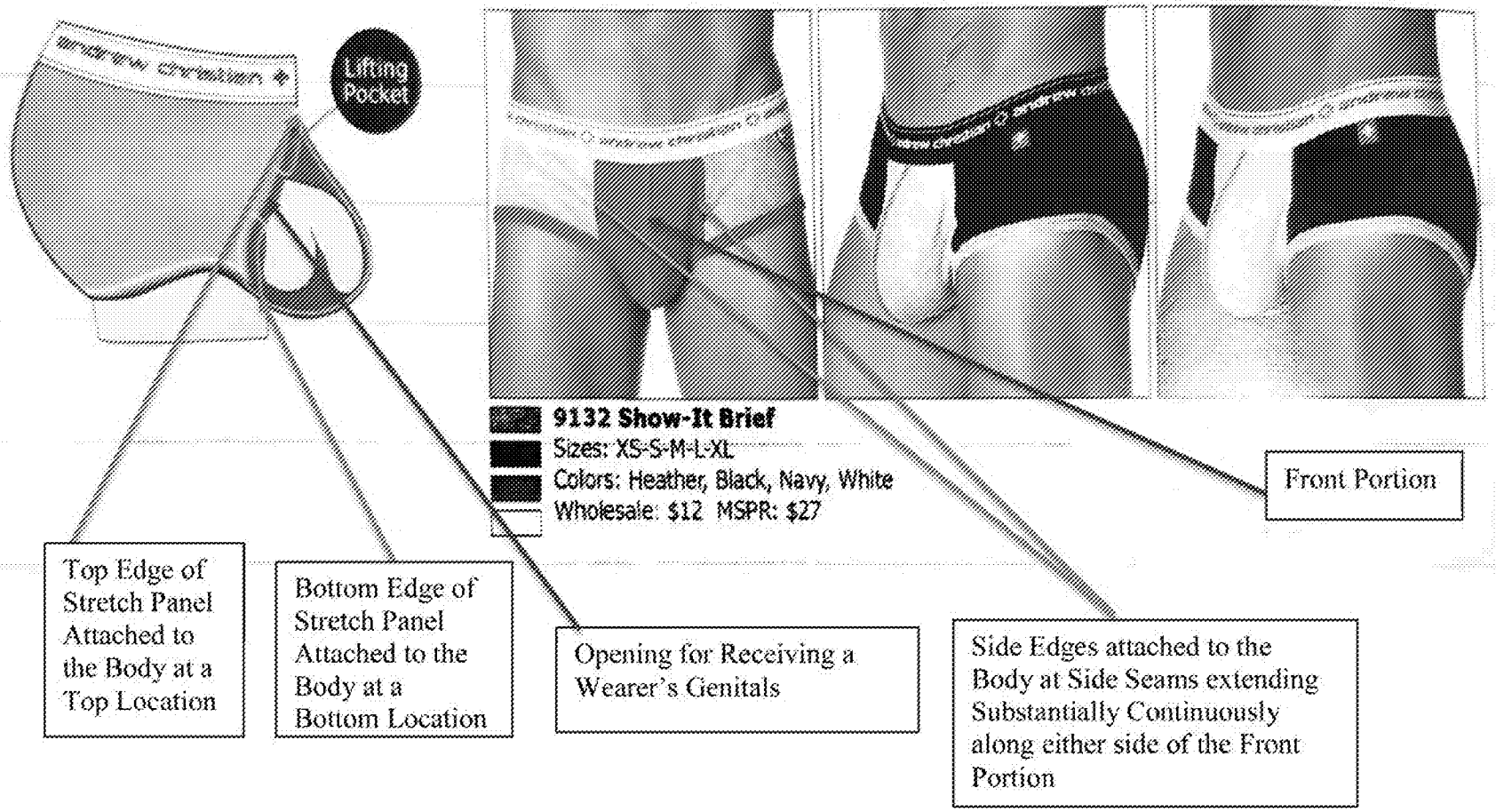 Show-It 2009-2010 Catalog at ACI000094.

Claim 1	Exemplary Disclosure in Prior Art
	The 9133 Show-It Boxer includes a stretch panel having a top edge attached to the body at a top location, a bottom edge attached to the body at a bottom location, side edges attached to the body at side seams extending substantially continuously along either side of the front portion. ***See,*** On information and belief, the 9133 Show-It Boxer utilizes the same "Show-It Technology 2.0" utilized in the 9132 Show-It Brief, and utilizes the same a "inner cup" (that is, a Stretch Panel) which has a top edge attached to the body at the waistband seam (the top location) and a bottom edge attached to the body at the first seam (the bottom location) as shown in the image from the Show-It 2009-2010 Catalog above. The 9133 Show-It Boxer's "stretch panel" (the inner cup or comfy cup) has side edges attached to the body at side seams extending continuously along either side of the "front portion," as shown in the images from the Show-It 2009 Line Sheet below. 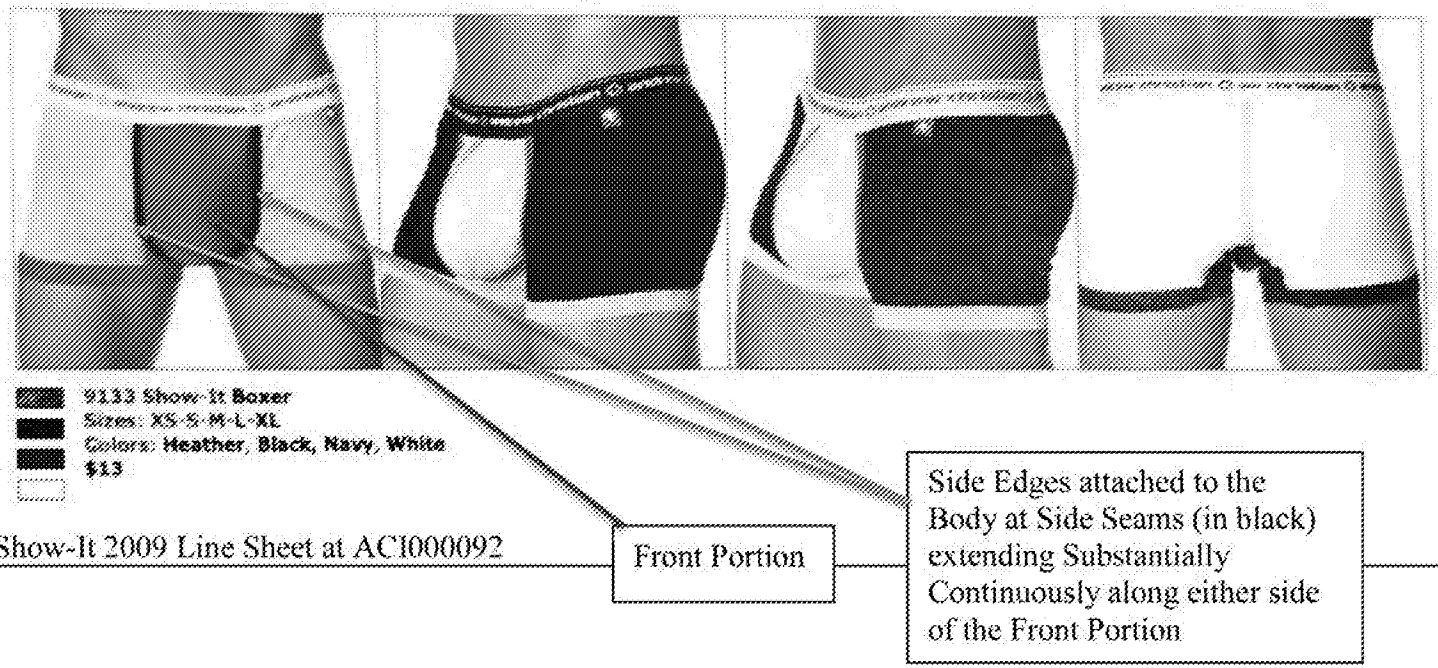 Show-It 2009 Line Sheet at ACI000092

Claim 1	Exemplary Disclosure in Prior Art
	To the extent Plaintiffs contend the '218 Publication does not expressly, implicitly, or inherently disclose a stretch panel attached to the body inside the front portion having a top edge attached to the body at a top location, a bottom edge attached to the body at a bottom location, side edges attached to the body at side seams extending substantially continuously along either side of the front portion, one of ordinary skill in the art would, based on one's knowledge and the '218 Publication, understand how to modify the disclosure of the '218 Publication to meet this limitation. Alternatively, one of ordinary skill could modify the '218 Publication in view of the 9132 Show-It Brief/9133 Show-It Boxer (disclosure above) to meet this limitation.
[1.3d] an opening for receiving a wearer's genitals, the opening having a rounded bottom edge and opposing side edges that are spaced apart from one another on either side	**The '218 Publication discloses an opening for receiving a wearer's genitals having a rounded bottom edge and opposing side edges that are spaced apart from one another on either side of the opening.** ***See,*** "[0025] Referring to FIGS. 4 and 5, when the undergarment of the first embodiment of the present invention put on the user's body, the user's penis and scrotum are extended out of the undergarment body 10 through the opening 16 [the Opening for Receiving a Wearer's Genitals], keeping the scrotum received in the scrotum receiving space 24 and the penis received in the penis receiving space 23."

Either Anticipation by U.S. Patent Publication No. 2004/0025218 (Published Feb. 12, 2004) or Obviousness In View of Andrew Christian Style No. 9132 (Show-It Brief) and 9133 (Show-It Boxer) and EP O 476 818 or the '369 Patent

Claim 1	Exemplary Disclosure in Prior Art
of the opening;	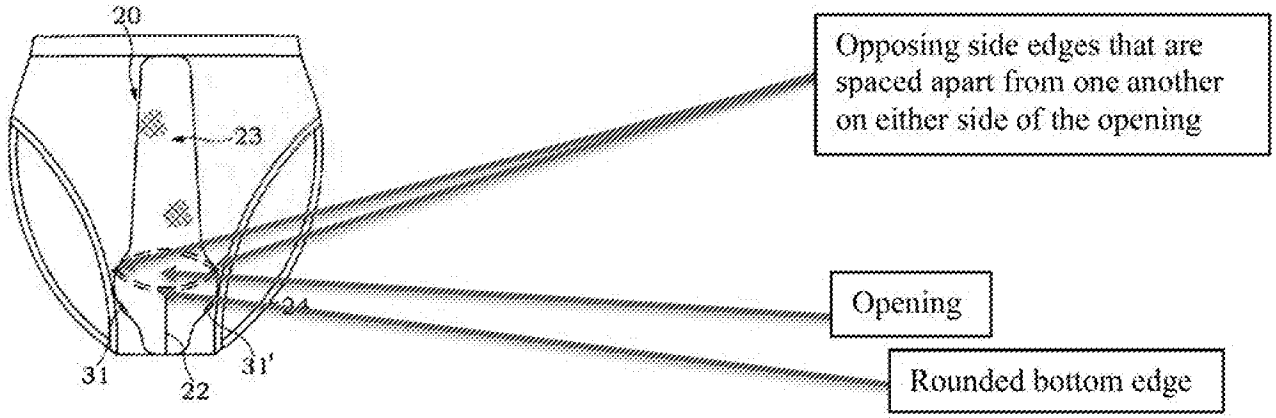 Fig.3 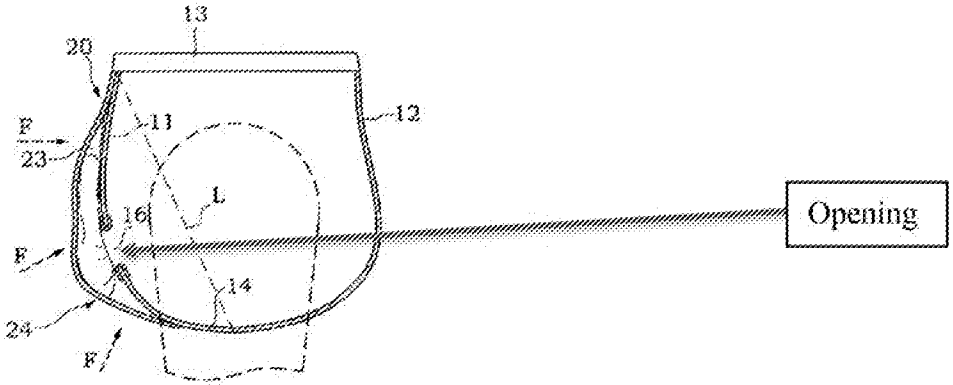 Fig.5

Either Anticipation by U.S. Patent Publication No. 2004/0025218 (Published Feb. 12, 2004) or Obviousness In View of Andrew Christian Style No. 9132 (Show-It Brief) and 9133 (Show-It Boxer) and EP O 476 818 or the '369 Patent

Claim 1	Exemplary Disclosure in Prior Art
	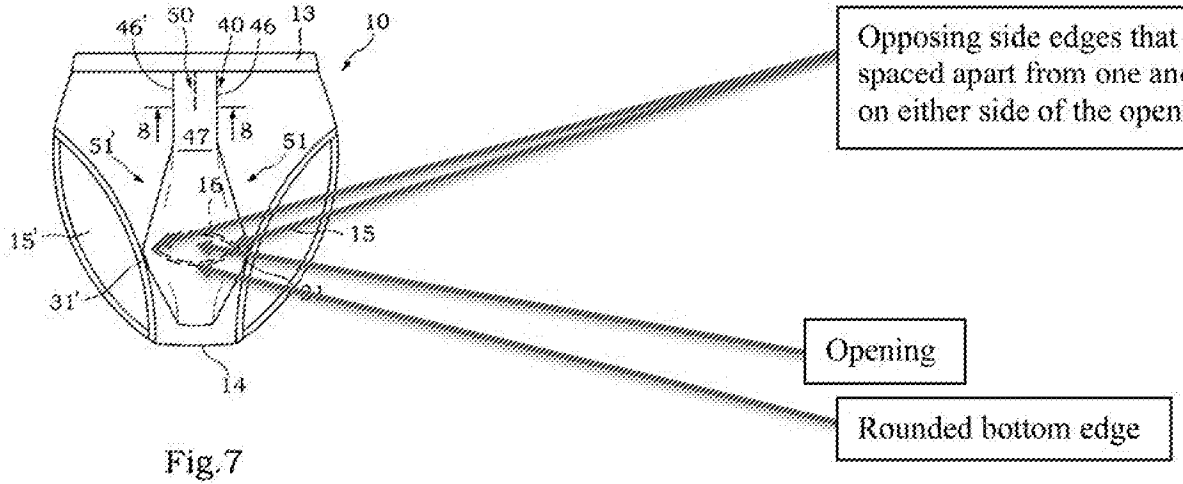 Fig.7 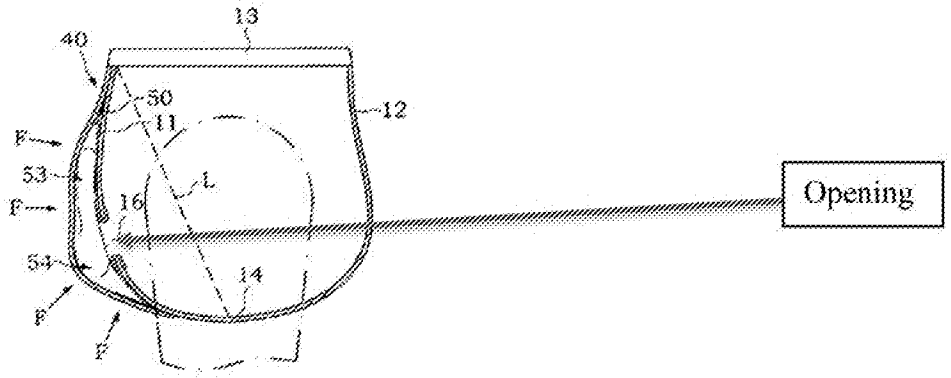 Fig.11

Either Anticipation by U.S. Patent Publication No. 2004/0025218 (Published Feb. 12, 2004) or Obviousness In View of Andrew Christian Style No. 9132 (Show-It Brief) and 9133 (Show-It Boxer) and EP O 476 818 or the '369 Patent

Claim 1	Exemplary Disclosure in Prior Art
	Furthermore, the "stretch panel" of the 9132 Show-It Brief includes an opening for receiving a wearer's genitals, the opening having a rounded bottom edge and opposing side edges that are spaced apart from one another on either side of the opening. ***See,*** 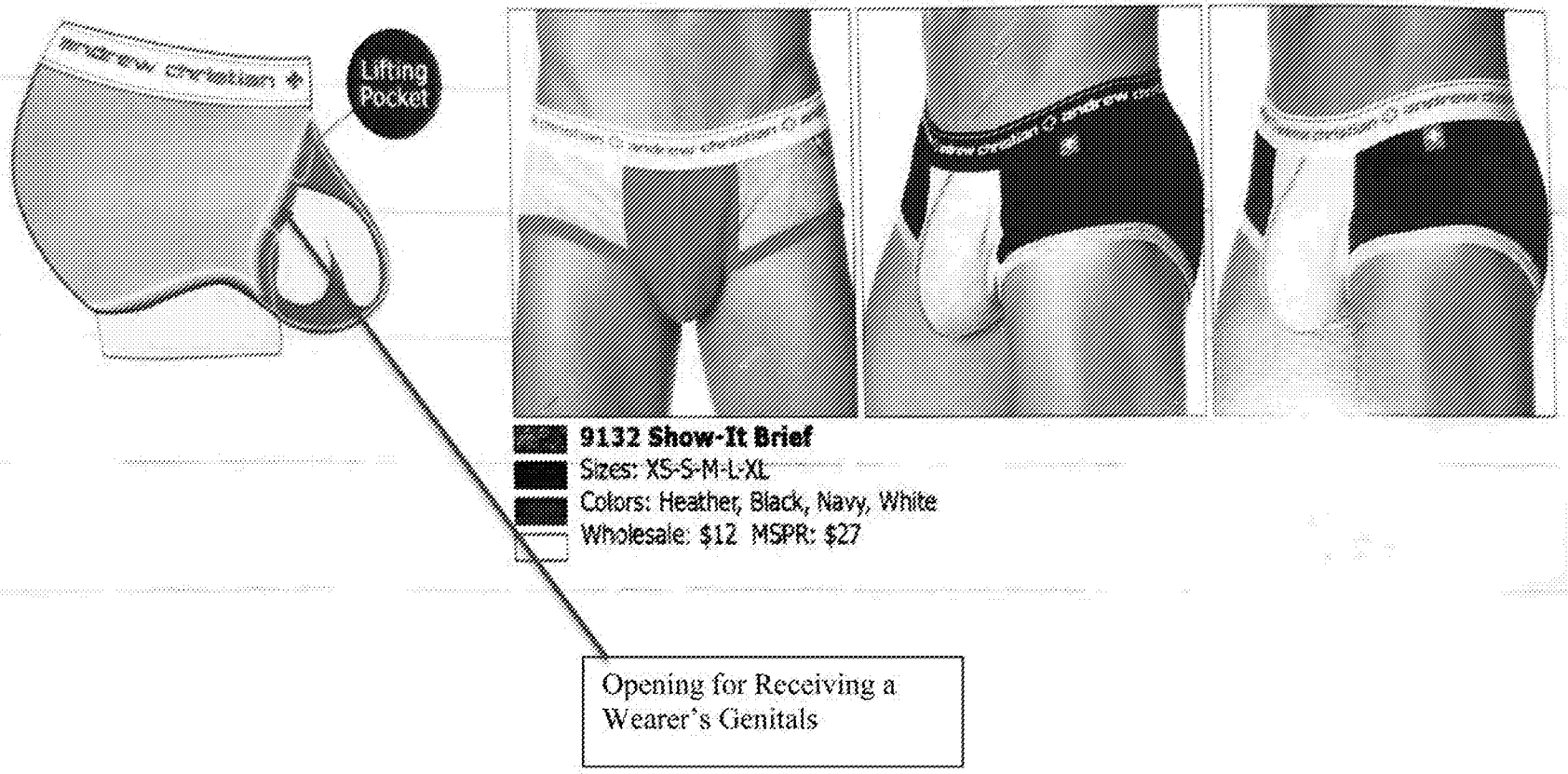 Show-It 2009-2010 Catalog at ACI000094.

Either Anticipation by U.S. Patent Publication No. 2004/0025218 (Published Feb. 12, 2004) or Obviousness In View of Andrew Christian Style No. 9132 (Show-It Brief) and 9133 (Show-It Boxer) and EP O 476 818 or the '369 Patent

Claim 1	Exemplary Disclosure in Prior Art
	 ACI000040 at 00:14. The opening of the "stretch panel" of the 9132 Show-It Brief is described as "horseshoe shaped," and the inside of a horseshoe has a rounded bottom edge and opposing side edges that are spaced apart from one another. In the above image, the horseshoe shaped edges of the opening of the 9132 Show-It Brief are outlined by the black elastic lining.

Claim 1	Exemplary Disclosure in Prior Art
	"Show-It Technology 2.0 features a hidden "comfy cup" [Stretch Panel] that gently lifts and presents the package to the front. The horseshoe shaped inner cup [the Stretch Panel] is lined by soft elastic that gently aids in the lifting…" March 2009 Press Release. *See also* March 6, 2009 Blog Entry and March 11, 2009 Blog Entry for the same description. **The "stretch panel" of the 9133 Show-It Boxer includes an opening for receiving a wearer's genitals, the opening having a rounded bottom edge and opposing side edges that are spaced apart from one another on either side of the opening.** ***See,*** The opening of the "stretch panel" of the 9133 Show-It Boxer is described as "horseshoe shaped," and the inside of a horseshoe has a rounded bottom edge and opposing side edges that are spaced apart from one another. "Show-It Technology 2.0 features a hidden "comfy cup" [Stretch Panel] that gently lifts and presents the package to the front. The horseshoe shaped inner cup [the Stretch Panel] is lined by soft elastic that gently aids in the lifting…" March 2009 Press Release. *See also* March 6, 2009 Blog Entry and March 11, 2009 Blog Entry for the same description. On information and belief, the 9133 Show-It Boxer utilized the same "Show-It Technology 2.0" utilized in the 9132 Show-It Brief, and an inside view of the 9133 Show-It Boxer would show a "inner cup" (that is, a Stretch Panel) with the same horseshoe shaped opening as shown above in ACI000040 at 00:14. *See* Show-It 2009 Line Sheet at ACI000092, depicting both the 9132 Show-It Brief and the 9133 Show-It Boxer and describing "Show-It™ with Show-It Technology 2.0" with "our comfy cup."
[1.4a] the stretch panel being resiliently elastic both in a direction between the top edge and the bottom edge and in a direction	**The '218 Publication discloses a stretch panel being resiliently elastic both in a direction between the top edge and the bottom edge and in a direction between the side edges.** ***See,*** In particular, the '218 Publication discloses the stretch panel, as discussed in 1.3, above. The only material disclosed by the '218 Publication is an elastically resilient four-way stretch material), as discussed in 1.3, above, which would be resiliently elastic both in a direction between the top edge and the bottom edge and in a direction between the side edges. "[0021] . . . The cover panel is made of a piece of elastic, ventilating cloth (cotton cloth or spandex- contained meshed cloth), having top and bottom ends respectively fixedly fastened to the waistband 13 and the crotch 14." A "spandex-contained meshed cloth" is a fabric capable of stretching in each of two different directions with substantial elastic recovery toward its pre-stretching size and shape.

Claim 1	Exemplary Disclosure in Prior Art
between the side edges,	"[0024] Referring to FIGS. 4, 5, 9, 10 and 11, when the undergarment put on the user's body, the undergarment body 10 and the cover panel 20 or 40 are stretched outwards into a three-dimensional status. At this time, the elastic material property of the cover panel 20 or 40 produces components of force F in direction toward the imaginary straight line L between the waistband and the crotch, keeping the cover panel 20 or 40 closely attached to the lower part of the user's abdomen." "[0025] . . . When the user adjusted the undergarment to the best fit position, the cover panel 20 is forced by its elastic material property to cover the penis and to secure the penis to the inside of the penis receiving space 23. At the same time, the cover panel 20 supports the scrotum in the scrotum receiving space 24." "[0027] The elastic material property and the effect of the stitched line 50 cause the side cover portions 49 and 49' to hold the user's penis positively in the penis receiving space 53 in vertical, preventing the user's penis from falling to the outside of the cover panel 40. Because the three-dimensional profile of the cover panel 40 is shaped like a water drop, the cover panel 40 effectively covers and supports the user's scrotum." *See also* [0022], [0023], [0026], [0028]. 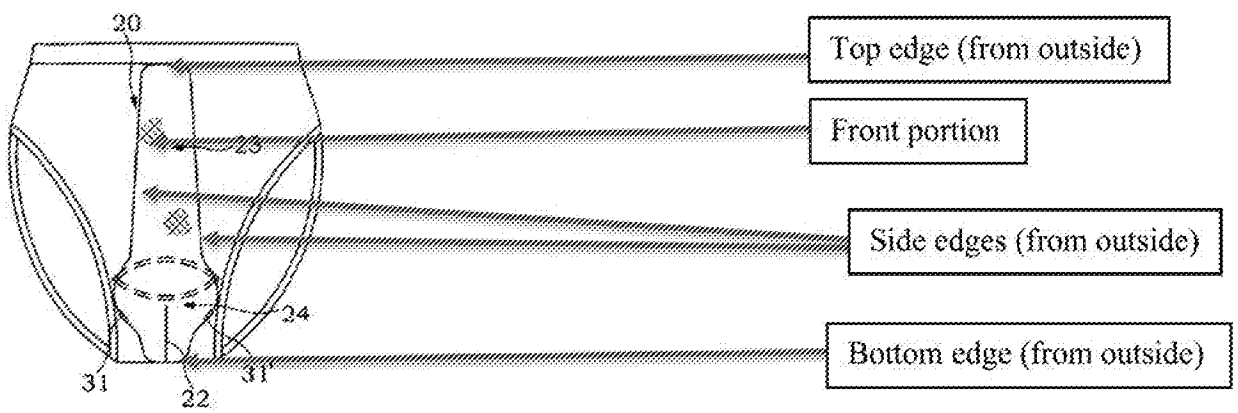 Fig.3

Either Anticipation by U.S. Patent Publication No. 2004/0025218 (Published Feb. 12, 2004) or Obviousness In View of Andrew Christian Style No. 9132 (Show-It Brief) and 9133 (Show-It Boxer) and EP O 476 818 or the '369 Patent

Claim 1	Exemplary Disclosure in Prior Art
	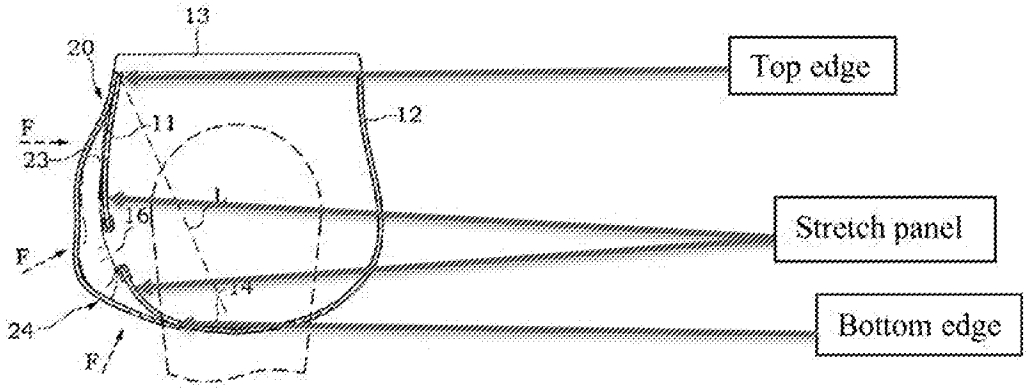 Fig.5

Either Anticipation by U.S. Patent Publication No. 2004/0025218 (Published Feb. 12, 2004) or Obviousness In View of Andrew Christian Style No. 9132 (Show-It Brief) and 9133 (Show-It Boxer) and EP O 476 818 or the '369 Patent

Claim 1	Exemplary Disclosure in Prior Art
	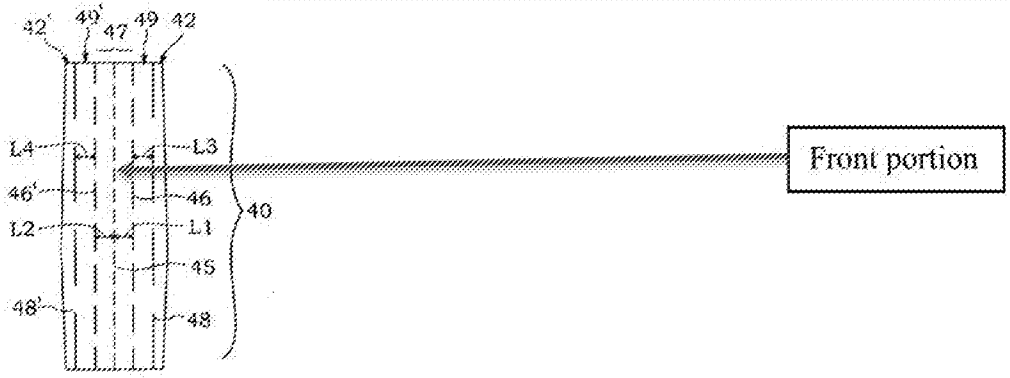 Fig.6

Either Anticipation by U.S. Patent Publication No. 2004/0025218 (Published Feb. 12, 2004) or Obviousness In View of Andrew Christian Style No. 9132 (Show-It Brief) and 9133 (Show-It Boxer) and EP O 476 818 or the '369 Patent

Claim 1	Exemplary Disclosure in Prior Art
	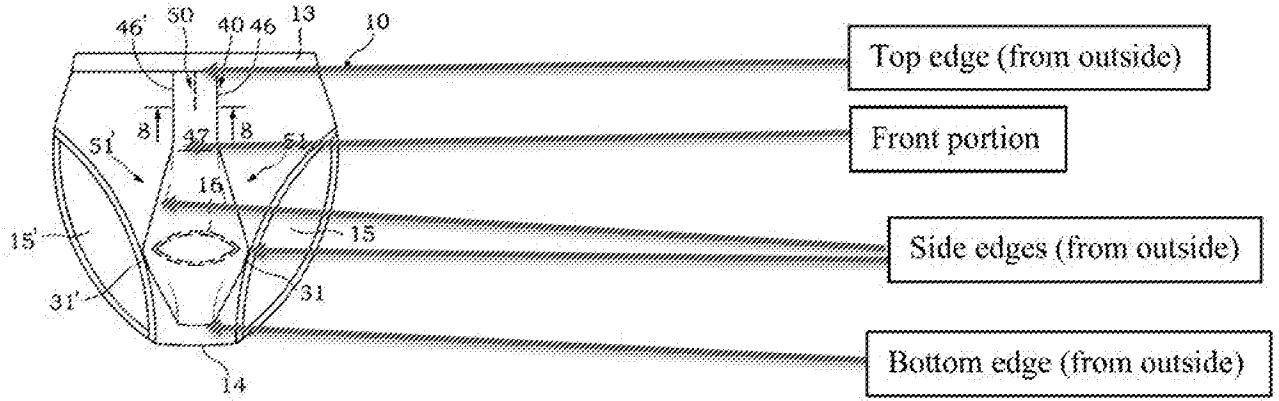 Fig.7 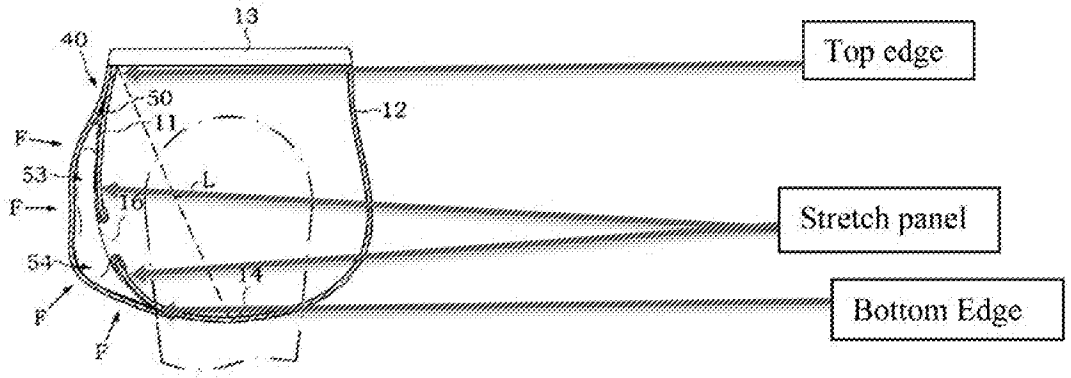 Fig.11 **Furthermore, the 9132 Show-It Brief includes a stretch panel being resiliently elastic both in a direction between the top edge and the bottom edge and in a direction between the side edges.** ***See,***

Claim 1	Exemplary Disclosure in Prior Art
	The 9132 Show-It Brief's "stretch panel" comprises [redacted] an elastically resilient four way stretch material [redacted] capable of stretching in each of two different directions with substantial elastic recovery toward its pre-stretching size and shape). February 5, 2009 Pattern Sheets at ACI000152. A stretch panel comprised of an elastically resilient four way stretch material [redacted] would be resiliently elastic in both a direction between the top edge and the bottom edge and in a direction between the side edges. In the screenshot from ACI000040 below, Andrew Christian is demonstrating the elastically resilient four way stretch of the "inner cup" (the Stretch Panel) by placing his hand through the opening of the Stretch Panel and into the Pouch, as the "inner cup" (the Stretch Panel) stretches in length (a direction between the top edge and bottom edge) and width (a direction between the side edges): 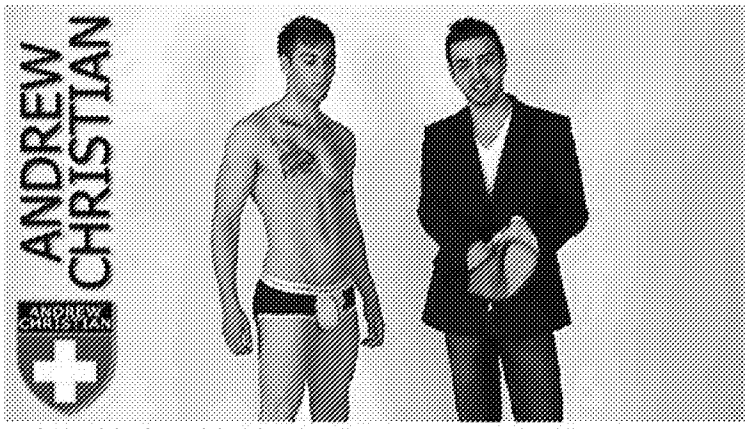 ACI000040 at 00:20. The "inner cup" (the Stretch Panel) returns to its original shape (that is, it has "substantial elastic recovery toward its pre-stretching size and shape" and is therefore elastically resilient), once Andrew Christian removes his hand:

Either Anticipation by U.S. Patent Publication No. 2004/0025218 (Published Feb. 12, 2004) or Obviousness In View of Andrew Christian Style No. 9132 (Show-It Brief) and 9133 (Show-It Boxer) and EP O 476 818 or the '369 Patent

Claim 1	Exemplary Disclosure in Prior Art
	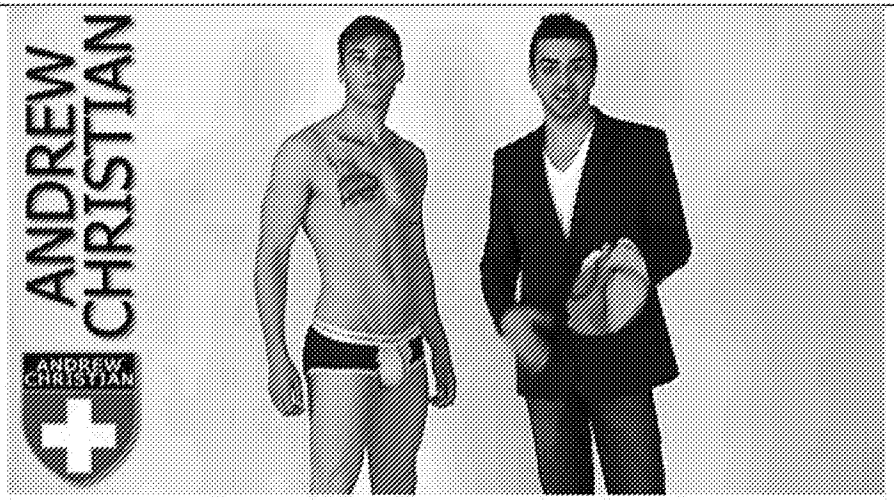 ACI000040 at 00.23. "Show-It Technology 2.0 features a hidden "comfy cup" that gently lifts and presents the package to the front. The horseshoe shaped inner cup [the Stretch Panel] is lined by soft elastic that gently aids in the lifting…" March 2009 Press Release. *See also* March 6, 2009 Blog Entry and March 11, 2009 for the same description. At minimum, the "soft elastic" of the "inner cup" (the Stretch Panel) makes the "inner cup" (the Stretch Panel) "resiliently elastic both in a direction between the top edge and the bottom edge and in a direction between the side edges," as it "gently aids in the lifting" of the male genitalia. To the extent Plaintiffs contend the 9132 Show-It Brief does not expressly, implicitly, or inherently disclose the stretch panel (the "inner cup") being resiliently elastic both in a direction between the top edge and the bottom edge and in a direction between the side edges, one of ordinary skill in the art would, based on one's knowledge and the 9132 Show-It Brief, would understand how to modify the 9132 Show-It Brief to meet this limitation.

Claim 1	Exemplary Disclosure in Prior Art
	The 9133 Show-It Boxer includes a stretch panel being resiliently elastic both in a direction between the top edge and the bottom edge and in a direction between the side edges. ***See,*** The 9133 Show-It Boxer's "stretch panel" comprises [redacted] an elastically resilient four way stretch material [redacted] capable of stretching in each of two different directions with substantial elastic recovery toward its pre-stretching size and shape). February 5, 2009 Pattern Sheets at ACI000151. A stretch panel comprised of an elastically resilient four way stretch material [redacted] would be resiliently elastic in both a direction between the top edge and the bottom edge and in a direction between the side edges. "Show-It Technology 2.0 features a hidden "comfy cup" that gently lifts and presents the package to the front. The horseshoe shaped inner cup [the Stretch Panel] is lined by soft elastic that gently aids in the lifting…" March 2009 Press Release. *See also* March 6, 2009 Blog Entry and March 11, 2009 for the same description. At minimum, the "soft elastic" of the "inner cup" (the Stretch Panel) makes the "inner cup" (the Stretch Panel) "resiliently elastic both in a direction between the top edge and the bottom edge and in a direction between the side edges," as it "gently aids in the lifting" of the male genitalia. On information and belief, the 9133 Show-It Boxer utilizes the same "Show-It Technology 2.0" utilized in the 9132 Show-It Brief, and an inside view of the 9133 Show-It Boxer would show a "inner cup" (that is, a Stretch Panel) inside the Front Portion as shown above in ACI000040 at 00:20 and 00:23. *See* Show-It 2009 Line Sheet at ACI000092, depicting both the 9132 Show-It Brief and the 9133 Show-It Boxer and describing "Show-It™ with Show-It Technology 2.0" with "our comfy cup." To the extent Plaintiffs contend the '218 Publication does not expressly, implicitly, or inherently disclose the stretch panel being resiliently elastic both in a direction between the top edge and the bottom edge and in a direction between the side edges, one of ordinary skill in the art would, based on one's knowledge and the '218 Publication, would understand how to modify '218 Publication to meet this limitation. Alternatively, one of ordinary skill could modify the '218 Publication in view of the 9132 Show-It Brief/9133 Show-It Boxer (disclosure above) to meet this limitation.

Claim 1	Exemplary Disclosure in Prior Art
[1.4b] the stretch panel having a length when unstretched smaller than a length measured along the front portion between the top and bottom locations and a width when unstretched smaller than a width measured along the front portion between the side seams	**The '218 Publication discloses a stretch panel having a length when unstretched smaller than a length measured along the front portion between the top and bottom locations and a width when unstretched smaller than a width measured along the front portion between the side seams.** ***See,*** In particular, because the cover panel (front portion) is attached on the outside of the stretch panel, as described in 1.3, above, and because the front portion contains a center pleat to form a three-dimensional status, the length and width of the stretch panel has a length when unstretched smaller than the length measured along the front portion between the top and bottom locations and a width when unstretched smaller than a width measured along the front portion between the side seams. The creases found in an alternative embodiment's front portion (cover panel 40) further disclose this limitation. "[0021] . . . The cover panel is made of a piece of elastic, ventilating cloth (cotton cloth or spandex- contained meshed cloth), having top and bottom ends respectively fixedly fastened to the waistband 13 and the crotch 14." "[0022] When fastened to the undergarment body 10, the upper part of the cover panel 20 defines with the undergarment body 10 a penis receiving space 23 above the opening 16 (see also FIG. 1) for receiving the user's penis, and the side flaps 21 and 21' define with the undergarment body 10a scrotum receiving space 24 below the opening 16 for receiving the user's scrotum. Further, because of the effect of the bottom center pleat 22, the lower part of the cover panel 20 protrudes forwards from the undergarment body 10, forming a three-dimensional status." "[0023] FIGS. 6-11 show a men's undergarment according to the second embodiment of the present invention. According to this alternate form, the cover panel 40 has a longitudinal center axis 45, two first creases 46 and 46' bilaterally equally spaced from the longitudinal center axis 45 at distance L1;L2 (L1=L2) and arranged in parallel, and two second creases 48 and 48' bilaterally equally spaced from the first creases 46 and 46' at distance L3;L4 (L3=L4) and arranged in parallel. The longitudinally extended middle part of the cover panel 40 forms a front cover portion 47 between the first creases 46 and 46'. The part of the cover panel 40 between the first creases 46 and 46' and the second creases 48 and 48' forms two parallel side cover portions 49 and 49'. The part of the cover panel 40 beyond the second creases 48 and 48' forms two back flap portions 42 and 42'. The two side cover portions 49 and 49' are folded backwards along the first creases 46 and 46' and received at the back side of the front cover portion 47, and then the back flap portions 42 and 42' are folded forwards along the second creases 48 and 48' and received at the back sides of the side cover portions 49 and 49', and then the upper part of the second creases 48 and 48' are stitched together, forming a stitched line 50."

Either Anticipation by U.S. Patent Publication No. 2004/0025218 (Published Feb. 12, 2004) or Obviousness In View of Andrew Christian Style No. 9132 (Show-It Brief) and 9133 (Show-It Boxer) and EP O 476 818 or the '369 Patent

Claim 1	Exemplary Disclosure in Prior Art
	"[0024] Referring to FIGS. 4, 5, 9, 10 and 11, when the undergarment put on the user's body, the undergarment body 10 and the cover panel 20 or 40 are stretched outwards into a three-dimensional status. At this time, the elastic material property of the cover panel 20 or 40 produces components of force F in direction toward the imaginary straight line L between the waistband and the crotch, keeping the cover panel 20 or 40 closely attached to the lower part of the user's abdomen." "[0025] . . . When the user adjusted the undergarment to the best fit position, the cover panel 20 is forced by its elastic material property to cover the penis and to secure the penis to the inside of the penis receiving space 23. At the same time, the cover panel 20 supports the scrotum in the scrotum receiving space 24." "[0026] Further, the side cover portions 49 and 49' and back flap portions 42 and 42' of the cover panel 40 are gradually downwardly extended from the stitched line 50 toward two opposite lateral sides, showing a three-dimensional profile shaped like a water drop." "[0027] The elastic material property and the effect of the stitched line 50 cause the side cover portions 49 and 49' to hold the user's penis positively in the penis receiving space 53 in vertical, preventing the user's penis from falling to the outside of the cover panel 40. Because the three-dimensional profile of the cover panel 40 is shaped like a water drop, the cover panel 40 effectively covers and supports the user's scrotum." "[0028] The length of the stitched line 50 helps define the variation of the width of the cover panel 40, i.e., the water drop-like three-dimensional becomes relatively shorter when the stitched line 50 relatively prolonged, or relatively longer when the stitched line 50 relatively shortened. The length of the stitched line 50 is determined subject to the size and style of the undergarment. Basically, the water drop-like three-dimensional profile of the cover panel 40 fits the genitals of a matured man."

Either Anticipation by U.S. Patent Publication No. 2004/0025218 (Published Feb. 12, 2004) or Obviousness In View of Andrew Christian Style No. 9132 (Show-It Brief) and 9133 (Show-It Boxer) and EP O 476 818 or the '369 Patent

Claim 1	Exemplary Disclosure in Prior Art
	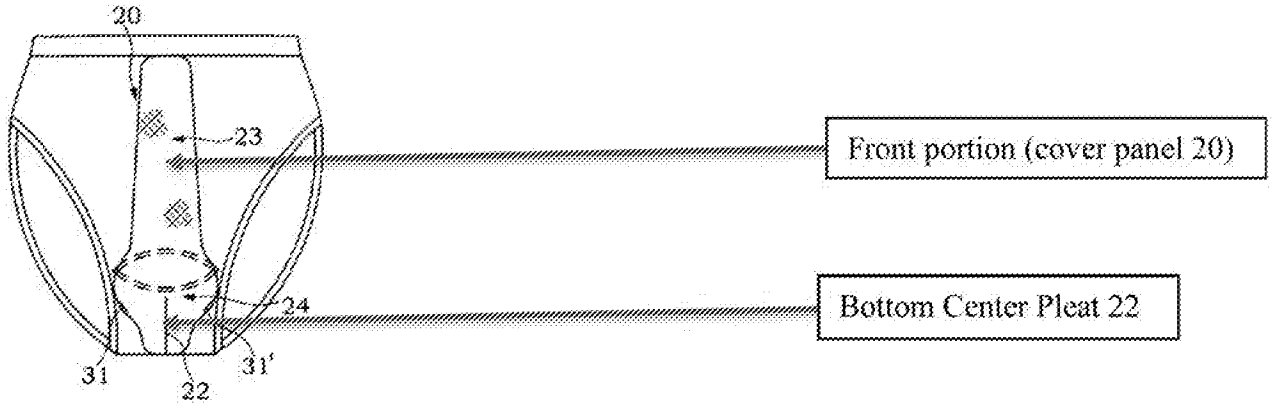 Fig.3 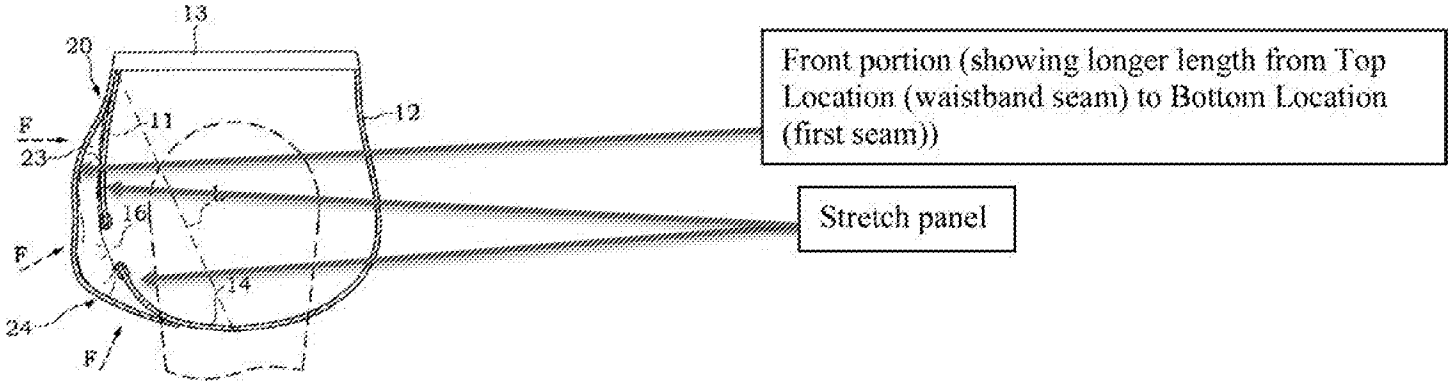 Fig.5

Either Anticipation by U.S. Patent Publication No. 2004/0025218 (Published Feb. 12, 2004) or Obviousness In View of Andrew Christian Style No. 9132 (Show-It Brief) and 9133 (Show-It Boxer) and EP O 476 818 or the '369 Patent

Claim 1	Exemplary Disclosure in Prior Art
	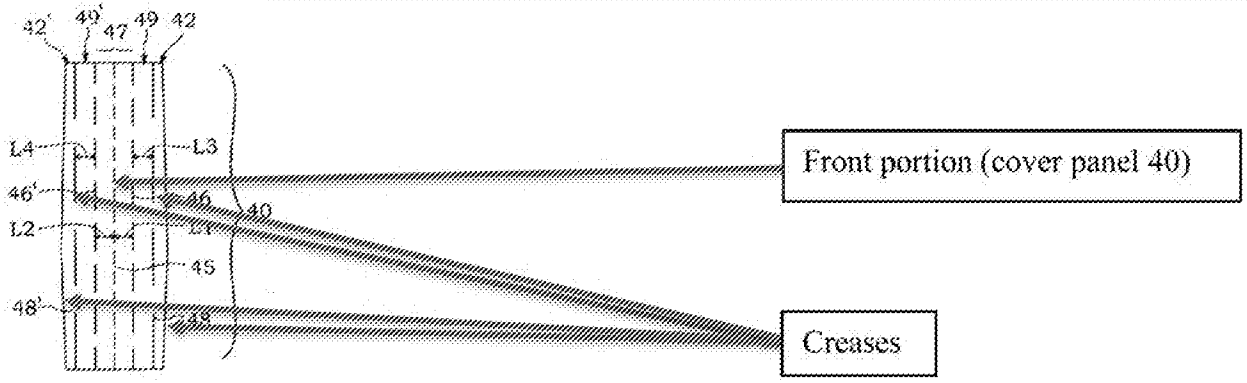 Fig.6

Either Anticipation by U.S. Patent Publication No. 2004/0025218 (Published Feb. 12, 2004) or Obviousness In View of Andrew Christian Style No. 9132 (Show-It Brief) and 9133 (Show-It Boxer) and EP O 476 818 or the '369 Patent

Claim 1	Exemplary Disclosure in Prior Art
	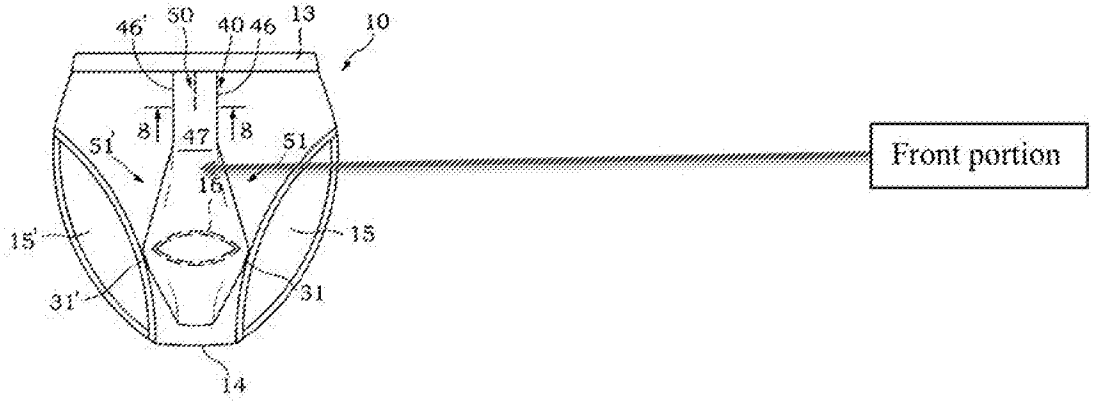 Fig.7 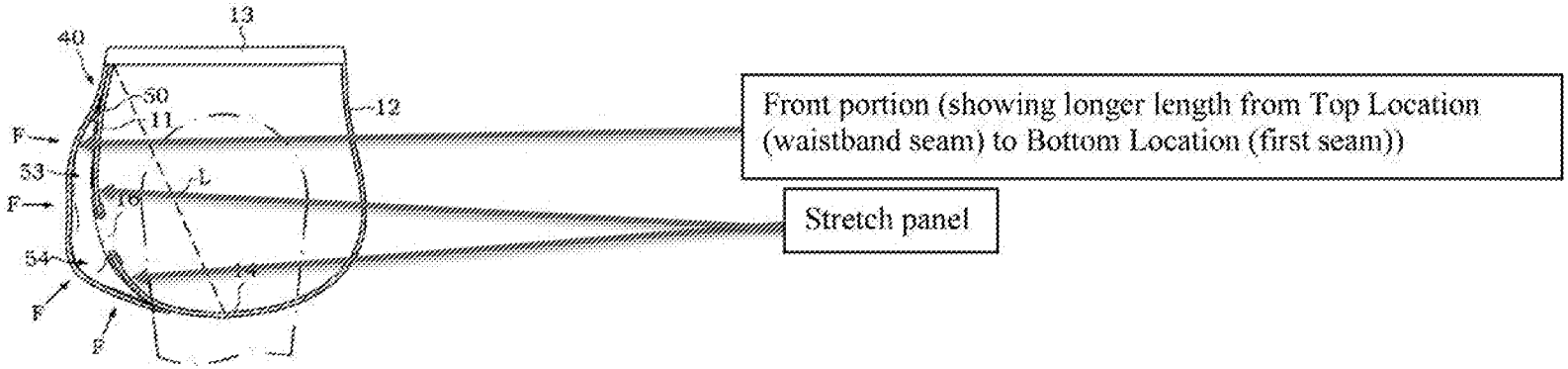 Fig.11

Claim 1	Exemplary Disclosure in Prior Art
	Furthermore, the 9132 Show-It Brief includes a stretch panel having a length when unstretched smaller than a length measured along the front portion between the top and bottom locations and a width when unstretched smaller than a width measured along the front portion between the side seams. ***See,*** In the below screenshot from ACI000040, one can see that the "front portion" of the 9132 Show-It Brief extends forward from the "stretch panel" (the "inner cup"), and therefore must be longer than the "stretch panel" ("inner cup"). As such, the "stretch panel" ("inner cup") must have a length when unstretched smaller than a length measured along the front portion between the top and bottom locations and a width when unstretched smaller than a width measured along the front portion between the side seams, as the "front portion" and "stretch panel" (the "inner cup") of the 9132 Show-It Brief are attached along the waistband seam (top location), a bottom seam (bottom location), and the side seams extending from the waistband seam to the first seam. 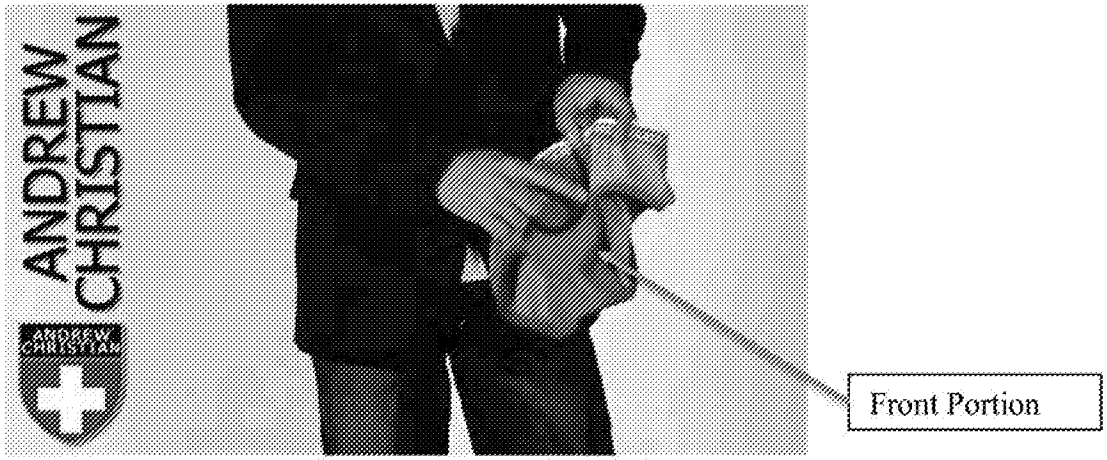 ACI000040 at 00:28.

Either Anticipation by U.S. Patent Publication No. 2004/0025218 (Published Feb. 12, 2004) or Obviousness In View of Andrew Christian Style No. 9132 (Show-It Brief) and 9133 (Show-It Boxer) and EP O 476 818 or the '369 Patent

Claim 1	Exemplary Disclosure in Prior Art
	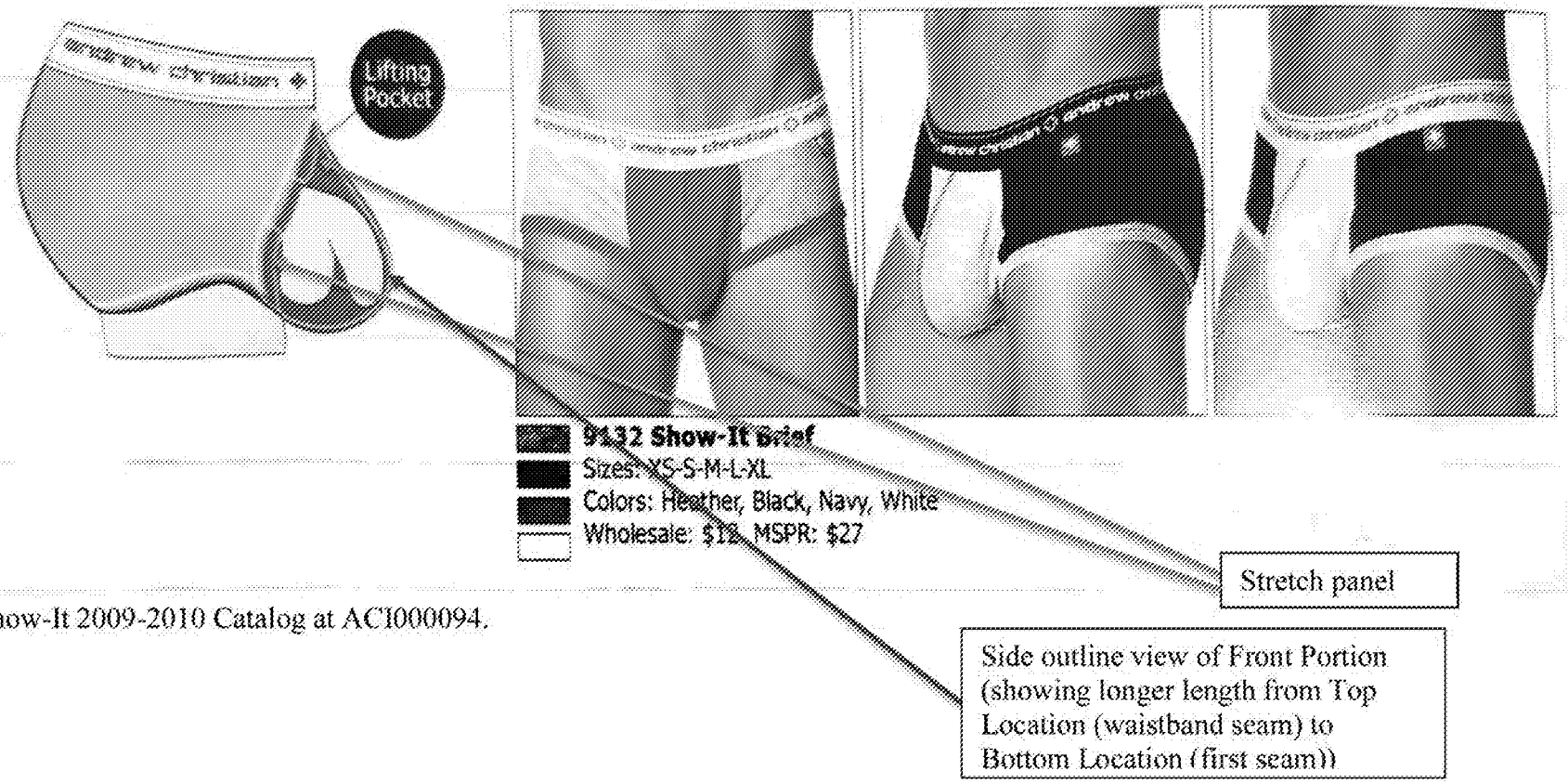 Show-It 2009-2010 Catalog at ACI000094. To the extent Plaintiffs contend the 9132 Show-It Brief does not expressly, implicitly, or inherently disclose a stretch panel having a length when unstretched smaller than a length measured along the front portion between the top and bottom locations and a width when unstretched smaller than a width measured along the front portion between the side seams, one of ordinary skill in the art would, based on one's knowledge and the 9132 Show-It Brief, understand how to modify 9132 Show-It Brief to meet this limitation.

Claim 1	Exemplary Disclosure in Prior Art
	The 9133 Show-It Boxer includes a stretch panel having a length when unstretched smaller than a length measured along the front portion between the top and bottom locations and a width when unstretched smaller than a width measured along the front portion between the side seams. ***See,*** 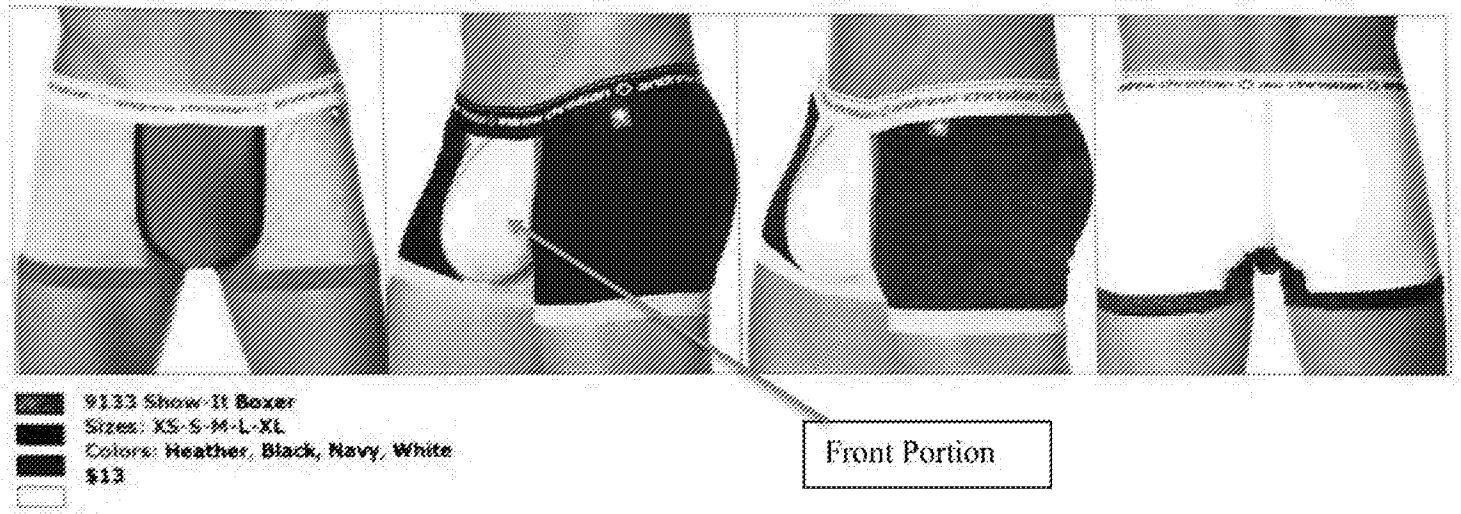 "Show-It Technology 2.0 features a hidden "comfy cup" that gently lifts and presents the package to the front. The horseshoe shaped inner cup [the Stretch Panel] is lined by soft elastic that gently aids in the lifting…" March 2009 Press Release. *See also* March 6, 2009 Blog Entry and March 11, 2009 for the same description. On information and belief, the 9133 Show-It Boxer utilized the same "Show-It Technology 2.0" utilized in the 9132 Show-It Brief, and an inside view of the 9133 Show-It Boxer would show a "inner cup" (that is, a Stretch Panel) inside the Front Portion as shown above in ACI000040 at 00:28. *See* Show-It 2009 Line Sheet at ACI000092, depicting both the 9132 Show-It Brief and the 9133 Show-It Boxer and describing "Show-It™ with Show-It Technology 2.0" with "our comfy cup."

Claim 1	Exemplary Disclosure in Prior Art
	The "front portion" of the 9133 Show-It Boxer extends forward from the "stretch panel" (the "inner cup"), and therefore must be longer than the "stretch panel" ("inner cup"). As such, the "stretch panel" ("inner cup") must have a length when unstretched smaller than a length measured along the front portion between the top and bottom locations and a width when unstretched smaller than a width measured along the front portion between the side seams, as the "front portion" and "stretch panel" (the "inner cup") of the 9133 Show-It Boxer are attached along the waistband seam (top location), a bottom seam (bottom location), and the side seams extending from the waistband seam to the first seam. To the extent Plaintiffs contend the 9133 Show-It Boxer does not expressly, implicitly, or inherently disclose a stretch panel having a length when unstretched smaller than a length measured along the front portion between the top and bottom locations and a width when unstretched smaller than a width measured along the front portion between the side seams, one of ordinary skill in the art would, based on one's knowledge and the 9133 Show-It Boxer, understand how to modify 9133 Show-It Boxer to meet this limitation. To the extent Plaintiffs contend the '218 Publication does not expressly, implicitly, or inherently disclose a stretch panel having a length when unstretched smaller than a length measured along the front portion between the top and bottom locations and a width when unstretched smaller than a width measured along the front portion between the side seams, one of ordinary skill in the art would, based on one's knowledge and the '218 Publication, understand how to modify '218 Publication to meet this limitation. Alternatively, one of ordinary skill could modify the '218 Publication in view of the 9132 Show-It Brief/9133 Show-It Boxer (disclosure above) to meet this limitation.
[1.4c] such that the front portion is gathered from side-to-side and top-to-bottom by the stretch panel and	**The front portion of the '218 Publication defines a three-dimensional pouch between the stretch panel and the front portion for receiving and holding the wearer's genitals.** ***See,*** In particular, the '218 Publication discloses a cover panel (the front portion) that creates a three-dimensional pouch with the stretch panel, as described in 1.3, above. The pouch ("a concave space") is comprised of the "penis receiving space 23 or 53" and the "scrotum receiving space 24 or 54." The pouch is for receiving the wearer's penis and scrotum (genitals). Furthermore, the front portion's center pleat further discloses this limitation, as do the creases in an alternative embodiment's front portion. "[0021] . . . The cover panel is made of a piece of elastic, ventilating cloth (cotton cloth or spandex- contained meshed cloth), having top and bottom ends respectively fixedly fastened to the waistband 13 and the crotch 14."

Either Anticipation by U.S. Patent Publication No. 2004/0025218 (Published Feb. 12, 2004) or Obviousness In View of Andrew Christian Style No. 9132 (Show-It Brief) and 9133 (Show-It Boxer) and EP O 476 818 or the '369 Patent

Claim 1	Exemplary Disclosure in Prior Art
defines a three-dimensional pouch between the stretch panel and the front portion for receiving the wearer's genitals and holding the wearer's genitals while the garment is being worn.	"[0022] When fastened to the undergarment body 10, the upper part of the cover panel 20 defines with the undergarment body 10 a penis receiving space 23 above the opening 16 (see also FIG. 1) for receiving the user's penis, and the side flaps 21 and 21' define with the undergarment body 10a scrotum receiving space 24 below the opening 16 for receiving the user's scrotum. Further, because of the effect of the bottom center pleat 22, the lower part of the cover panel 20 protrudes forwards from the undergarment body 10, forming a three-dimensional status." "[0023] FIGS. 6-11 show a men's undergarment according to the second embodiment of the present invention. According to this alternate form, the cover panel 40 has a longitudinal center axis 45, two first creases 46 and 46' bilaterally equally spaced from the longitudinal center axis 45 at distance Ll;L2 (Ll=L2) and arranged in parallel, and two second creases 48 and 48' bilaterally equally spaced from the first creases 46 and 46' at distance L3;L4 (L3=L4) and arranged in parallel. The longitudinally extended middle part of the cover panel 40 forms a front cover portion 47 between the first creases 46 and 46'. The part of the cover panel 40 between the first creases 46 and 46' and the second creases 48 and 48' forms two parallel side cover portions 49 and 49'. The part of the cover panel 40 beyond the second creases 48 and 48' forms two back flap portions 42 and 42'. The two side cover portions 49 and 49' are folded backwards along the first creases 46 and 46' and received at the back side of the front cover portion 47, and then the back flap portions 42 and 42' are folded forwards along the second creases 48 and 48' and received at the back sides of the side cover portions 49 and 49', and then the upper part of the second creases 48 and 48' are stitched together, forming a stitched line 50." "[0024] Referring to FIGS. 4, 5, 9, 10 and 11, when the undergarment put on the user's body, the undergarment body 10 and the cover panel 20 or 40 are stretched outwards into a three-dimensional status. At this time, the elastic material property of the cover panel 20 or 40 produces components of force F in direction toward the imaginary straight line L between the waistband and the crotch, keeping the cover panel 20 or 40 closely attached to the lower part of the user's abdomen." "[0025] . . . When the user adjusted the undergarment to the best fit position, the cover panel 20 is forced by its elastic material property to cover the penis and to secure the penis to the inside of the penis receiving space 23. At the same time, the cover panel 20 supports the scrotum in the scrotum receiving space 24." "[0026] Further, the side cover portions 49 and 49' and back flap portions 42 and 42' of the cover panel 40 are gradually downwardly extended from the stitched line 50 toward two opposite lateral sides, showing a three-dimensional profile shaped like a water drop."

Claim 1	Exemplary Disclosure in Prior Art
	"[0027] The elastic material property and the effect of the stitched line 50 cause the side cover portions 49 and 49' to hold the user's penis positively in the penis receiving space 53 in vertical, preventing the user's penis from falling to the outside of the cover panel 40. Because the three-dimensional profile of the cover panel 40 is shaped like a water drop, the cover panel 40 effectively covers and supports the user's scrotum." "[0028] The length of the stitched line 50 helps define the variation of the width of the cover panel 40, i.e., the water drop-like three-dimensional becomes relatively shorter when the stitched line 50 relatively prolonged, or relatively longer when the stitched line 50 relatively shortened. The length of the stitched line 50 is determined subject to the size and style of the undergarment. Basically, the water drop-like three-dimensional profile of the cover panel 40 fits the genitals of a matured man." 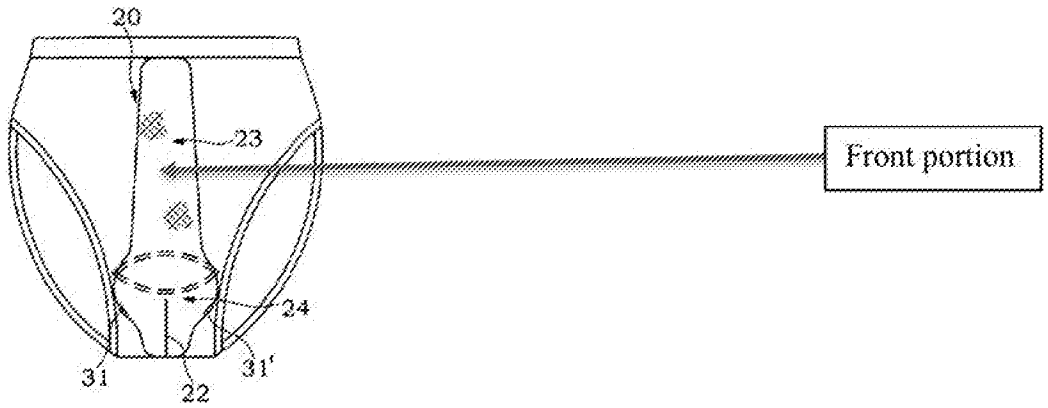 Fig.3

Either Anticipation by U.S. Patent Publication No. 2004/0025218 (Published Feb. 12, 2004) or Obviousness In View of Andrew Christian Style No. 9132 (Show-It Brief) and 9133 (Show-It Boxer) and EP O 476 818 or the '369 Patent

Claim 1	Exemplary Disclosure in Prior Art
	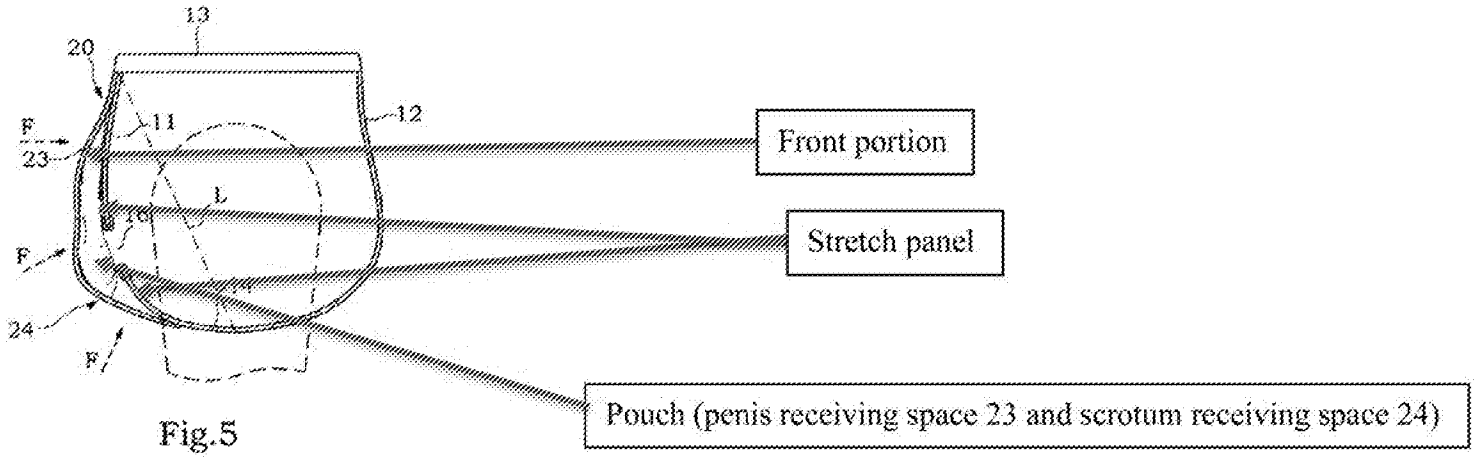 Fig.5

Either Anticipation by U.S. Patent Publication No. 2004/0025218 (Published Feb. 12, 2004) or Obviousness In View of Andrew Christian Style No. 9132 (Show-It Brief) and 9133 (Show-It Boxer) and EP O 476 818 or the '369 Patent

Claim 1	Exemplary Disclosure in Prior Art
	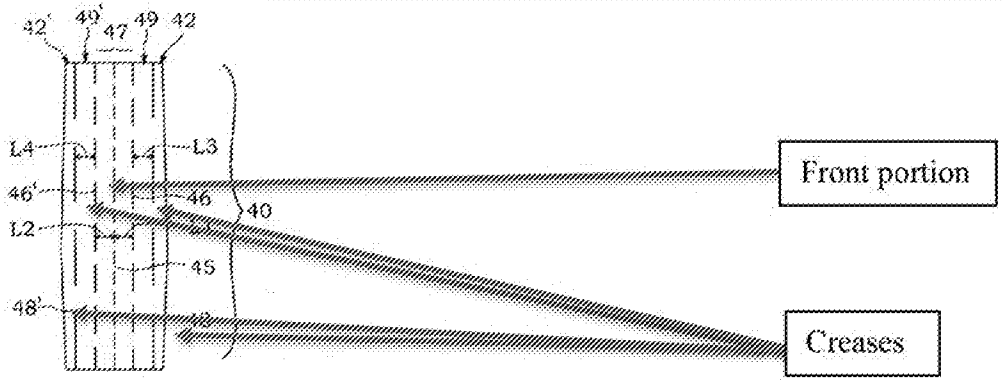 Fig.6

Either Anticipation by U.S. Patent Publication No. 2004/0025218 (Published Feb. 12, 2004) or Obviousness In View of Andrew Christian Style No. 9132 (Show-It Brief) and 9133 (Show-It Boxer) and EP O 476 818 or the '369 Patent

Claim 1	Exemplary Disclosure in Prior Art
	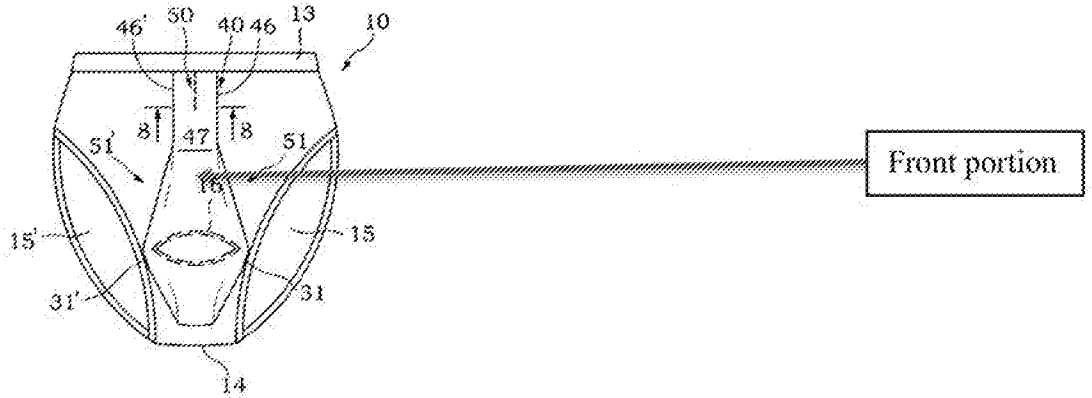 Fig.7 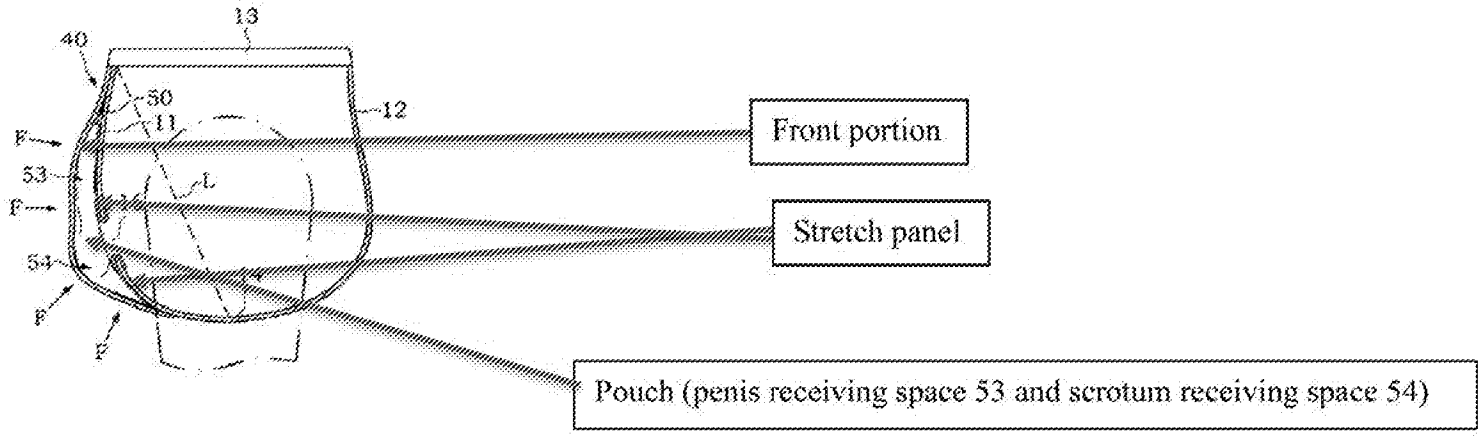 Fig.11 To the extent Plaintiffs contend the '218 Publication does not expressly, implicitly, or inherently disclose that the front portion is gathered from side-to-side and top-to-bottom by the stretch panel and defines a three-dimensional pouch between the stretch panel and

Either Anticipation by U.S. Patent Publication No. 2004/0025218 (Published Feb. 12, 2004) or Obviousness In View of Andrew Christian Style No. 9132 (Show-It Brief) and 9133 (Show-It Boxer) and EP O 476 818 or the '369 Patent

Claim 1	Exemplary Disclosure in Prior Art
	the front portion, one of ordinary skill in the art would, based on one's knowledge and the '218 Publication, understand how to modify the disclosure of the '218 Publication to meet this limitation. Alternatively, one of ordinary skill could modify the '218 Publication in view of the 9132 Show-It Brief/9133 Show-It Boxer (disclosure below) to meet this limitation. **The front portion of the 9132 Show-It Brief is gathered from side to side and top to bottom by the stretch panel and defines a three-dimensional pouch between the stretch panel and the front portion for receiving and holding the wearer's genitals while the garment is being worn.**

Either Anticipation by U.S. Patent Publication No. 2004/0025218 (Published Feb. 12, 2004) or Obviousness In View of Andrew Christian Style No. 9132 (Show-It Brief) and 9133 (Show-It Boxer) and EP O 476 818 or the '369 Patent

Claim 1	Exemplary Disclosure in Prior Art
	 Show-It 2009-2010Catalog at ACI000094. Three Dimensional Pouch (a concave space) behind Front Portion (can see three-dimensional nature of Pouch inside Front Portion in right three pictures) – the Pouch is receiving and holding the wearer genitals while the 9132 Show-It Brief is being worn. Show-It 2009 Line Sheet at ACI000092 ("Contrasting pouch accentuates front.") The following screenshots from ACI000038 and ACI000040 show gathering of the "front portion" along each of the side seams and the waistband seam. The gathering of the "front portion" along the first seam is not visible, as the first seam is hidden by the pouch of the 9132 Show-It Brief and the legs of the wearer.

Either Anticipation by U.S. Patent Publication No. 2004/0025218 (Published Feb. 12, 2004) or Obviousness In View of Andrew Christian Style No. 9132 (Show-It Brief) and 9133 (Show-It Boxer) and EP O 476 818 or the '369 Patent

Claim 1	Exemplary Disclosure in Prior Art
	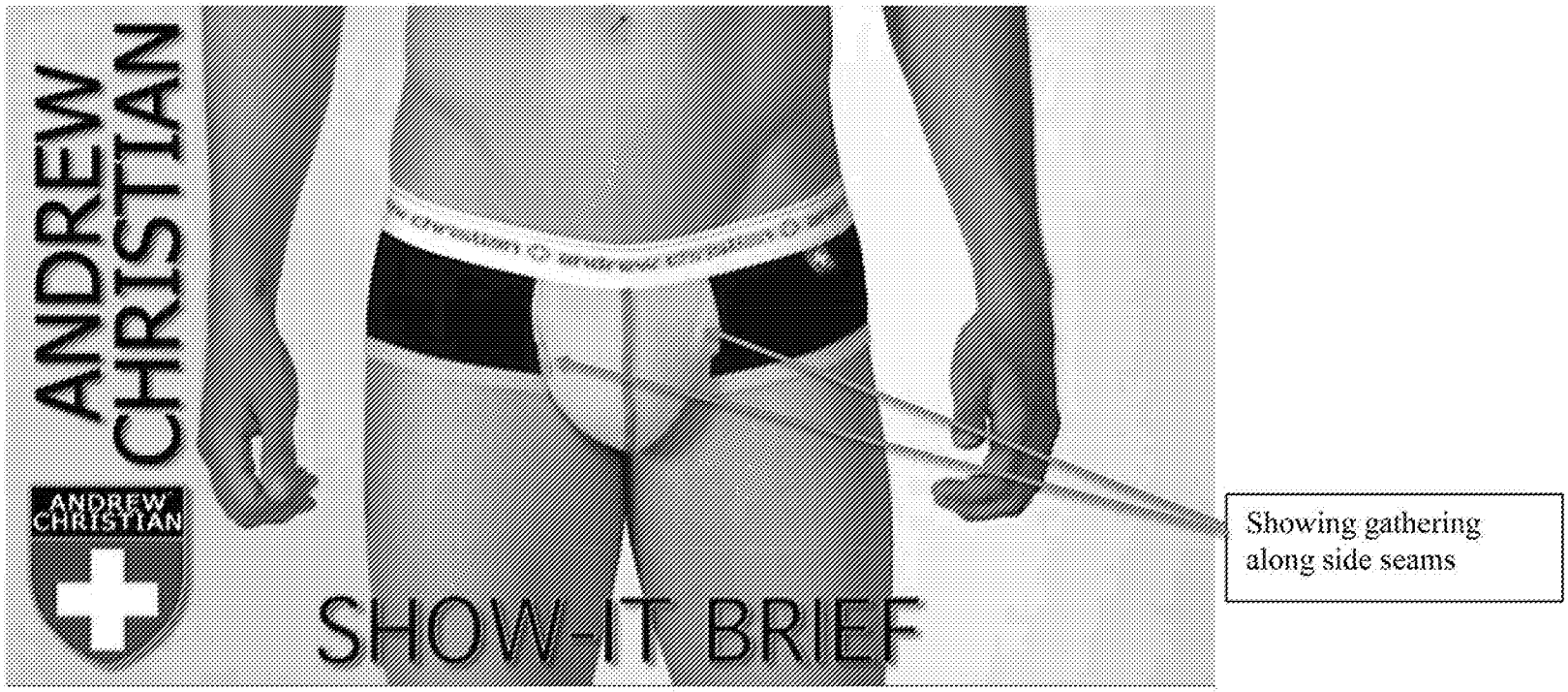 ACI000040 at 00:10.

Either Anticipation by U.S. Patent Publication No. 2004/0025218 (Published Feb. 12, 2004) or Obviousness In View of Andrew Christian Style No. 9132 (Show-It Brief) and 9133 (Show-It Boxer) and EP O 476 818 or the '369 Patent

Claim 1	Exemplary Disclosure in Prior Art
	 AC000038 at 4:02. To the extent Plaintiffs contend the 9132 Show-It Brief does not expressly, implicitly, or inherently disclose that the front portion is gathered from side-to-side and top-to-bottom by the stretch panel and defines a three-dimensional pouch between the stretch panel and the front portion for receiving the wearer's genitals and holding the wearer's genitals while the garment is being worn, one of ordinary skill in the art would, based on one's knowledge and the 9132 Show-It Brief, understand how to modify the 9132 Show-It Brief to meet this limitation.

Claim 1	Exemplary Disclosure in Prior Art
	The front portion of the 9133 Show-It Boxer is gathered from side to side and top to bottom by the stretch panel and defines a three-dimensional pouch between the stretch panel and the front portion for receiving and holding the wearer's genitals while the garment is being worn. *See* Show-It 2009 Line Sheet at ACI000092, depicting both the 9132 Show-It Brief and the 9133 Show-It Boxer and describing "Show-It™ with Show-It Technology 2.0" with "contrasting pouch [that] accentuates front." 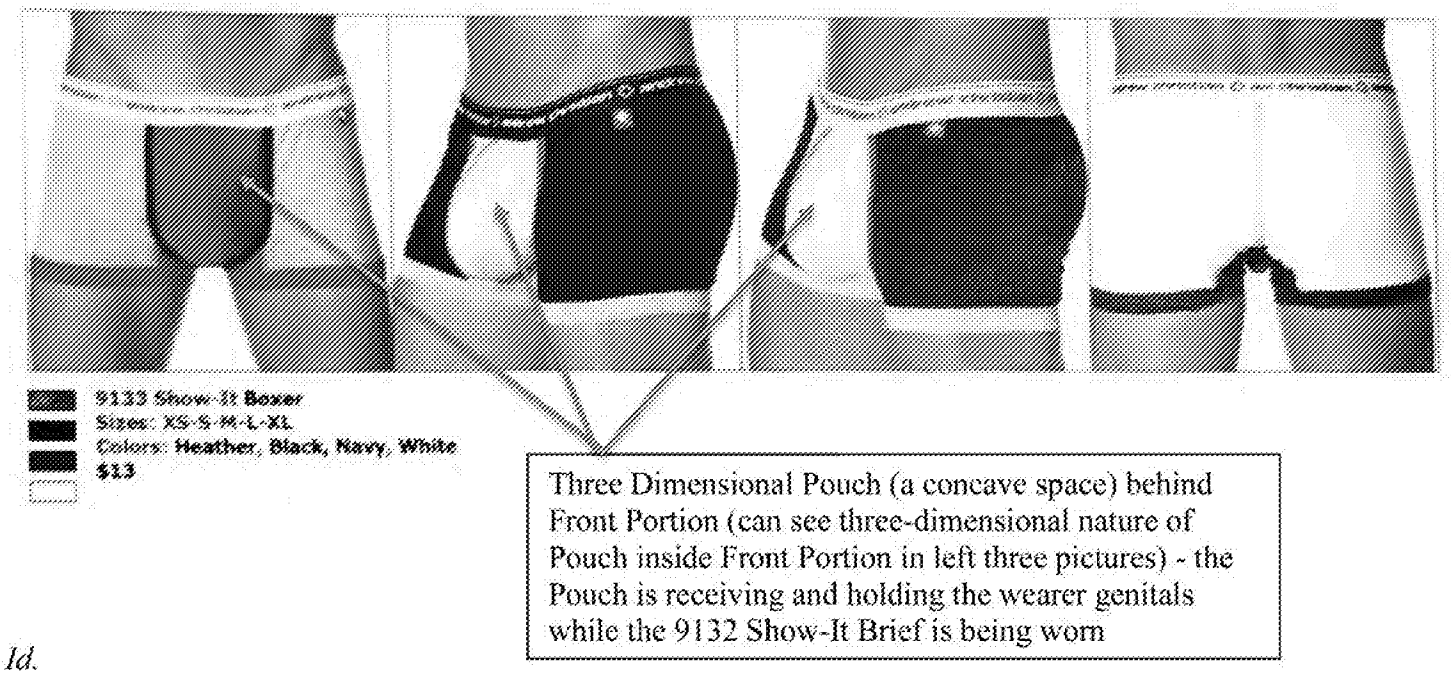 *Id.*

Either Anticipation by U.S. Patent Publication No. 2004/0025218 (Published Feb. 12, 2004) or Obviousness In View of Andrew Christian Style No. 9132 (Show-It Brief) and 9133 (Show-It Boxer) and EP O 476 818 or the '369 Patent

Claim 1	Exemplary Disclosure in Prior Art
	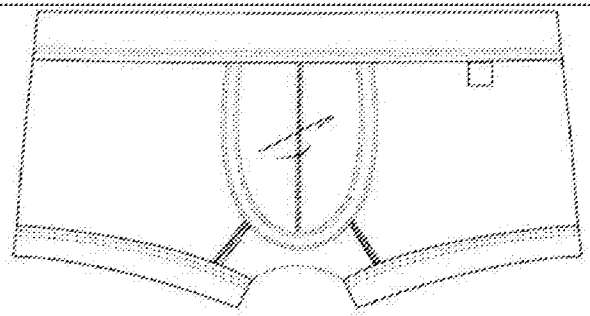 ACI000022. The lines in the center of the Front Portion above indicate the three dimensional nature of the Pouch formed between the Front Portion (shown) and the Stretch Panel (internal "inner cup"). The following screenshots from ACI000038 show gathering of the "front portion" along one side seam and the waistband seam. The gathering of the "front portion" along the other side seam is not visible, based on the orientation in the screenshot, and the gathering of the "front portion" along the first seam is not visible, as the first seam is hidden by the pouch of the 9133 Show-It Boxer and the legs of the wearer.

Either Anticipation by U.S. Patent Publication No. 2004/0025218 (Published Feb. 12, 2004) or Obviousness In View of Andrew Christian Style No. 9132 (Show-It Brief) and 9133 (Show-It Boxer) and EP O 476 818 or the '369 Patent

Claim 1	Exemplary Disclosure in Prior Art
	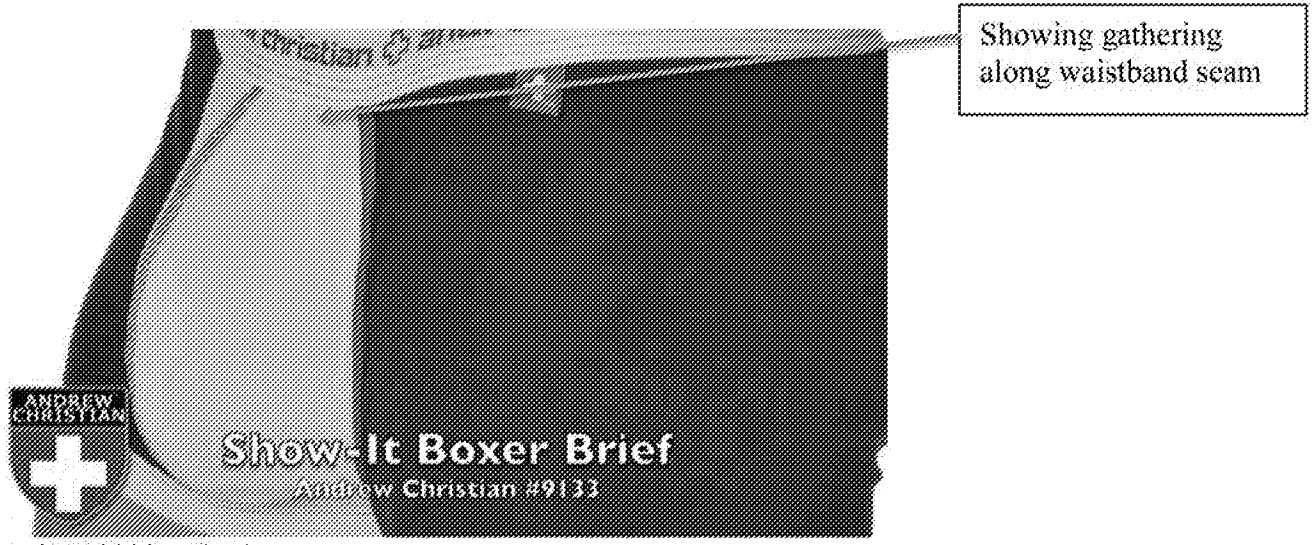 ACI000038 at 2:52.

Either Anticipation by U.S. Patent Publication No. 2004/0025218 (Published Feb. 12, 2004) or Obviousness In View of Andrew Christian Style No. 9132 (Show-It Brief) and 9133 (Show-It Boxer) and EP O 476 818 or the '369 Patent

Claim 1	Exemplary Disclosure in Prior Art
	 ACI000038 at 3:05. To the extent Plaintiffs contend the 9133 Show-It Boxer does not expressly, implicitly, or inherently disclose that the front portion is gathered from side-to-side and top-to-bottom by the stretch panel and defines a three-dimensional pouch between the stretch panel and the front portion for receiving the wearer's genitals and holding the wearer's genitals while the garment is being worn, one of ordinary skill in the art would, based on one's knowledge and the 9133 Show-It Boxer, understand how to modify 9133 Show-It Boxer to meet this limitation. To the extent Plaintiffs contend the '218 Publication, alone or in combination with the 9132 Show-It Brief/9133 Show-It Boxer, does not expressly, implicitly, or inherently disclose that the front portion is gathered from side-to-side and top-to-bottom by the stretch panel and defines a three-dimensional pouch between the stretch panel and the front portion for receiving the wearer's genitals and holding the wearer's genitals while the garment is being worn, one of ordinary skill in the art would, based on one's knowledge and

Claim 1	Exemplary Disclosure in Prior Art
	the '218 Publication, alone or in combination with the 9132 Show-It Brief/9133 Show-It Boxer, understand how to modify the '218 Publication, alone or in combination with the 9132 Show-It Brief/9133 Show-It Boxer, to meet this limitation. Specifically, one of ordinary skill in the art would understand how to make a garment wherein the front portion is gathered from side-to-side and top-to-bottom by the stretch panel, wherein the stretch panel has a length when unstretched smaller than a length measured along the front portion between the top and bottom locations and a width when unstretched smaller than a width measured along the front portion between the side seams. **For example, EP O 476 818 teaches a method of gathering from side-to-side and top-to-bottom by an elastic fabric.** *See*, "The garment now has a waist opening 31 and in accordance with the present invention, an elasticated band 32 is secured in face to face contact to a marginal portion 33 of the garment surrounding the waist opening 31. The band 32 is secured to the garment whilst in a tensioned condition (i.e. stretched condition) so that on relaxation, the fabric of the marginal portion 33 is ruched thereby enabling the band to stretch when the garment is being worn." (4:4-12) "The operative inserts the garment over the band, drops the presser foot 56, sews a pre-set number of stitches, typically two or three, after which the roller 59 drops automatically, and the metering device 62 automatically reverses to apply the pre-programmed tension to the band so that the ruched effect can be achieved." (6:47-53)

Claim 2	Exemplary Disclosure in Prior Art
[2] A garment according to claim 1 wherein the stretch panel has asymmetrical stretch characteristics such that the stretch panel stretches more easily in a direction parallel to the waistband and less easily in a	The obviousness combinations asserted and disclosed in this chart for claim 2 are as follows: • '218 Publication in view of 9132 Show-It Brief/9133 Show-It Boxer • '218 Publication in view of 9132 Show-It Brief/9133 Show-It Boxer in further view of EP O 476 818 • '218 Publication in view of 9132 Show-It Brief/9133 Show-It Boxer in further view of the '369 Patent See above regarding claim 1.

Claim 2	Exemplary Disclosure in Prior Art
direction at right angles to the waistband.	The Court has construed "asymmetrical stretch characteristics" as "a property wherein the degree of stretch produced when force is applied in one direction differs from the degree of stretch produced when the same amount of force is applied in a direction at right angles to the first direction." **The '218 Publication discloses a garment wherein the stretch panel has a property wherein the degree of stretch produced when force is applied in one direction differs from the degree of stretch produced when the same amount of force is applied in a direction at right angles to the first direction such that the stretch panel stretches more easily in a direction parallel to the waistband and less easily in a direction at right angles to the waistband.** ***See,*** In particular, the only material disclosed by the '218 Publication is an elastically resilient four-way stretch material, as discussed in 1.3, above. "[0021] . . . The cover panel is made of a piece of elastic, ventilating cloth (cotton cloth or spandex- contained meshed cloth), having top and bottom ends respectively fixedly fastened to the waistband 13 and the crotch 14." "[0024] Referring to FIGS. 4, 5, 9, 10 and 11, when the undergarment put on the user's body, the undergarment body 10 and the cover panel 20 or 40 are stretched outwards into a three-dimensional status. At this time, the elastic material property of the cover panel 20 or 40 produces components of force F in direction toward the imaginary straight line L between the waistband and the crotch, keeping the cover panel 20 or 40 closely attached to the lower part of the user's abdomen."

Either Anticipation by U.S. Patent Publication No. 2004/0025218 (Published Feb. 12, 2004) or Obviousness In View of Andrew Christian Style No. 9132 (Show-It Brief) and 9133 (Show-It Boxer) and EP O 476 818 or the '369 Patent

Claim 2	Exemplary Disclosure in Prior Art
	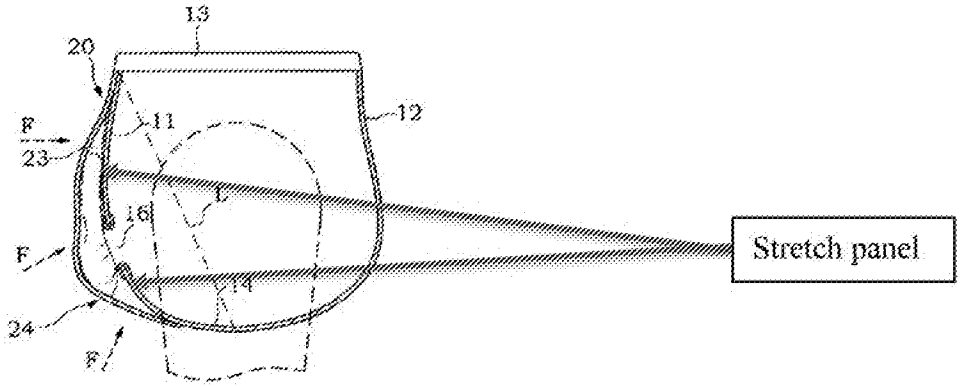 Fig.5 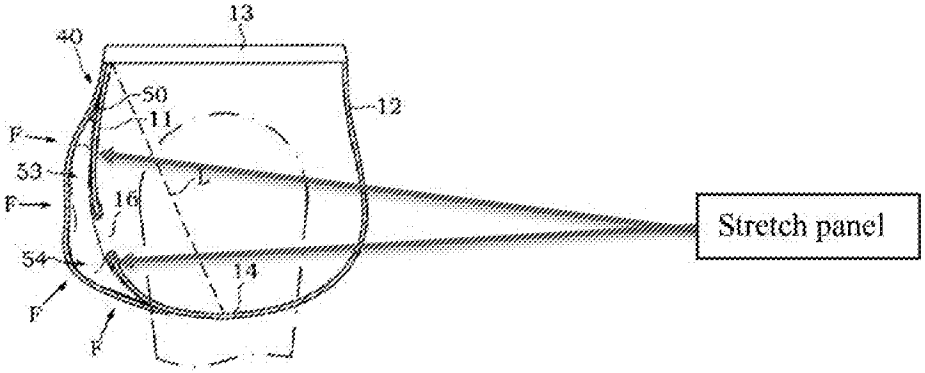 Fig.11

Claim 2	Exemplary Disclosure in Prior Art
	To the extent Plaintiffs contend the '218 Publication does not expressly, implicitly, or inherently disclose a garment wherein the stretch panel has asymmetrical stretch characteristics such that the stretch panel stretches more easily in a direction parallel to the waistband and less easily in a direction at right angles to the waistband, one of ordinary skill in the art would, based on one's knowledge and the '218 Publication, understand how to modify the disclosure of the '218 Publication to meet this limitation. Alternatively, one of ordinary skill could modify the '218 Publication in view of the 9132 Show-It Brief/9132 Show-It Boxer and/or the '369 Patent to meet this limitation. **The 9132 Show-It Brief is a garment wherein the stretch panel has a property wherein the degree of stretch produced when force is applied in one direction differs from the degree of stretch produced when the same amount of force is applied in a direction at right angles to the first direction such that the stretch panel stretches more easily in a direction parallel to the waistband and less easily in a direction at right angles to the waistband.** ***See,*** The 9132 Show-It Brief's "stretch panel" comprises [redacted] a material that is capable of stretching more easily in a first direction than a second direction at right angles to the first direction. February 5, 2009 Pattern Sheets at ACI000152. The "inner cup" of the 9132 Show-It Brief (the Stretch Panel) "lifts and presents" the male genitalia, which indicates that the "inner cup" (the Stretch Panel) will stretch less easily in a direct at right angles to the waistband (i.e., up and down) – to "lift" up it needs to stretch relatively less in the "up" direction. "Show-It Technology 2.0 features a hidden "comfy cup" that gently lifts and presents the package to the front. The horseshoe shaped inner cup [the Stretch Panel] is lined by soft elastic that gently aids in the lifting…." March 2009 Press Release. *See also* March 6, 2009 Blog Entry and March 11, 2009 Blog Entry for the same description. To the extent Plaintiffs contend the 9132 Show-It Brief does not expressly, implicitly, or inherently disclose a garment wherein the stretch panel has asymmetrical stretch characteristics such that the stretch panel stretches more easily in a direction parallel to the waistband and less easily in a direction at right angles to the waistband, one of ordinary skill

Claim 2	Exemplary Disclosure in Prior Art
	in the art would, based on one's knowledge and the 9132 Show-It Brief, understand how to modify the 9132 Show-It Brief to meet this limitation. **The 9133 Show-It Boxer is a garment wherein the stretch panel has a property wherein the degree of stretch produced when force is applied in one direction differs from the degree of stretch produced when the same amount of force is applied in a direction at right angles to the first direction such that the stretch panel stretches more easily in a direction parallel to the waistband and less easily in a direction at right angles to the waistband.** ***See,*** The 9133 Show-It Boxer's "stretch panel" comprises [redacted] a material that is capable of stretching more easily in a first direction than a second direction at right angles to the first direction. February 5, 2009 Pattern Sheets at ACI000151. The "inner cup" of the 9133 Show-It Boxer (the Stretch Panel) "lifts and presents" the male genitalia, which indicates that the "inner cup" (the Stretch Panel) will stretch less easily in a direct at right angles to the waistband (i.e., up and down) – to "lift" up it needs to stretch relatively less in the "up" direction. "Show-It Technology 2.0 features a hidden "comfy cup" that gently lifts and presents the package to the front. The horseshoe shaped inner cup [the Stretch Panel] is lined by soft elastic that gently aids in the lifting…" March 2009 Press Release. *See also* March 6, 2009 Blog Entry and March 11, 2009 Blog Entry for the same description. To the extent Plaintiffs contend the 9133 Show-It Boxer does not expressly, implicitly, or inherently disclose a garment wherein the stretch panel has asymmetrical stretch characteristics such that the stretch panel stretches more easily in a direction parallel to the waistband and less easily in a direction at right angles to the waistband, one of ordinary skill in the art would, based on one's knowledge and the 9133 Show-It Boxer, understand how to modify the 9133 Show-It Boxer to meet this limitation. **The '369 Patent discloses a fabric with a property wherein the degree of stretch produced when force is applied in one direction differs from the degree of stretch produced when the same amount of force is applied in a direction at right angles to the first direction such that it stretches more easily in one direction and less easily in a direction at right angles to the first direction.**

Claim 2	Exemplary Disclosure in Prior Art
	In particular, the '369 Patent discloses a warp knit, which has asymmetrical stretch characteristics. *See*, "With reference to FIG. 3, the warp knit is generally known in the art for having strands 26 running substantially parallel along a direction 27 of the fabric. Lateral threads 28 running substantially perpendicular to the strands 26 and in a direction 29 encircle sets of two strands 26 at once. Each adjacent lateral thread 28 encircles one of the two strands 26 in the first set and one of the two strands 26 from the second set. This pattern is repeated throughout. The warp knit, by virtue of having parallel strands 26 along the direction 27 of the fabric, is resistant to stretch in the direction 27 when compared to other knitted fabrics, which may undesirably stretch. Thus, the warp knit fabric stretches less along the direction 27 than along the direction 29." (2:40-52) "The warp knit fabric used to form the groin portion 14 can stretch a relatively greater amount in the horizontal direction, roughly parallel to the waistband, than in the vertical direction. The ability to stretch in the horizontal direction allows for the accommodation of different sizes and shapes of male genitals. The groin portion stretches in the horizontal direction to accommodate the genitals of the supporter user while maintaining slight pressure on the genitals in the horizontal direction, thus aiding the cupping and compression functions of the supporter 10." (3:1-10)

Either Anticipation by U.S. Patent Publication No. 2004/0025218 (Published Feb. 12, 2004) or Obviousness In View of Andrew Christian Style No. 9132 (Show-It Brief) and 9133 (Show-It Boxer) and EP O 476 818 or the '369 Patent

Claim 2	Exemplary Disclosure in Prior Art
	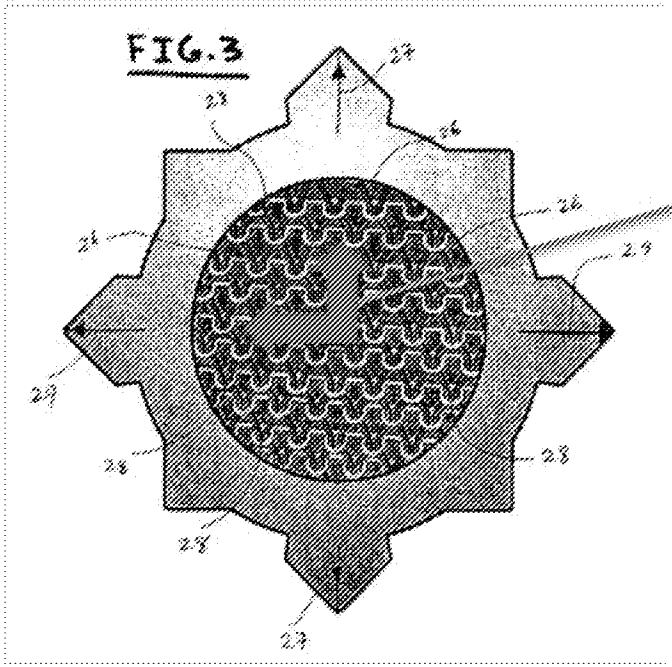 Direction 27 is at a right angle to Direction 29 (and vice versa). The "warp knit" (the fabric) stretches more easily in the horizontal direction, that is, Direction 29 (roughly parallel to the waistband), than in the vertical direction, that is, Direction 27 (roughly at a right angle to the waistband)

Claim 3	Exemplary Disclosure in Prior Art
[3] A garment according to claim 1 wherein the stretch panel is rectangular and the opening is U-shaped.	The obviousness combinations asserted and disclosed in this chart for claim 3 are as follows: • '218 Publication in view of 9132 Show-It Brief/9133 Show-It Boxer • '218 Publication in view of 9132 Show-It Brief/9133 Show-It Boxer in further view of EP O 476 818 See above regarding claim 1.

Either Anticipation by U.S. Patent Publication No. 2004/0025218 (Published Feb. 12, 2004) or Obviousness In View of Andrew Christian Style No. 9132 (Show-It Brief) and 9133 (Show-It Boxer) and EP O 476 818 or the '369 Patent

Claim 3	Exemplary Disclosure in Prior Art
	The Court has construed rectangular as "having a shape with four corners wherein the lengths of the top and bottom edges are approximately equal to each other and the lengths of the left and right edges are approximately equal to each other." **The '218 Publication discloses a garment wherein the stretch panel has a shape with four corners wherein the lengths of the top and bottom edges are approximately equal to each other and the lengths of the left and right edges are approximately equal to each other and the opening is U-shaped.** *See,* 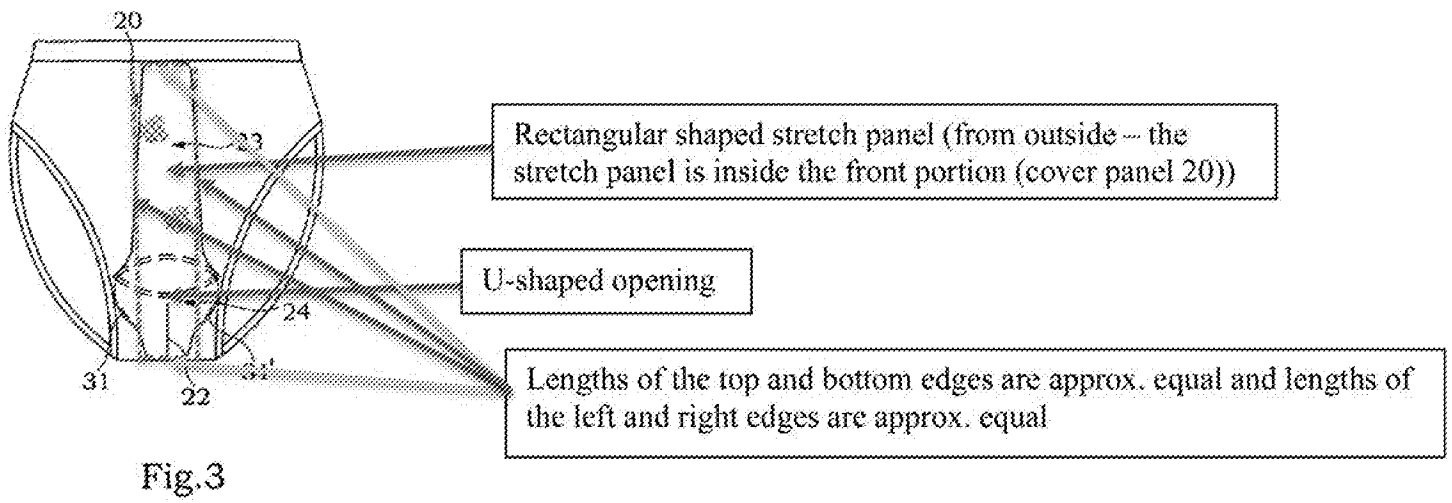 Fig.3

Either Anticipation by U.S. Patent Publication No. 2004/0025218 (Published Feb. 12, 2004) or Obviousness In View of Andrew Christian Style No. 9132 (Show-It Brief) and 9133 (Show-It Boxer) and EP O 476 818 or the '369 Patent

Claim 3	Exemplary Disclosure in Prior Art
	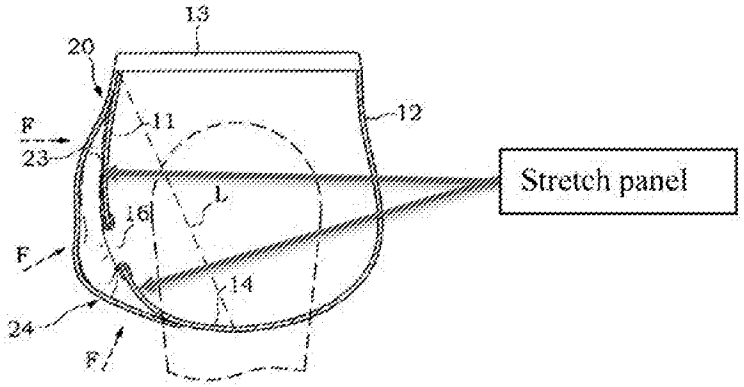 Fig.5 **Furthermore, the 9132 Show-It Brief is a garment wherein the stretch panel is a shape with four corners wherein the lengths of the top and bottom edges are approximately equal to each other and the lengths of the left and right edges are approximately equal to each other and the opening is U-shaped.**

Either Anticipation by U.S. Patent Publication No. 2004/0025218 (Published Feb. 12, 2004) or Obviousness In View of Andrew Christian Style No. 9132 (Show-It Brief) and 9133 (Show-It Boxer) and EP O 476 818 or the '369 Patent

Claim 3	Exemplary Disclosure in Prior Art
	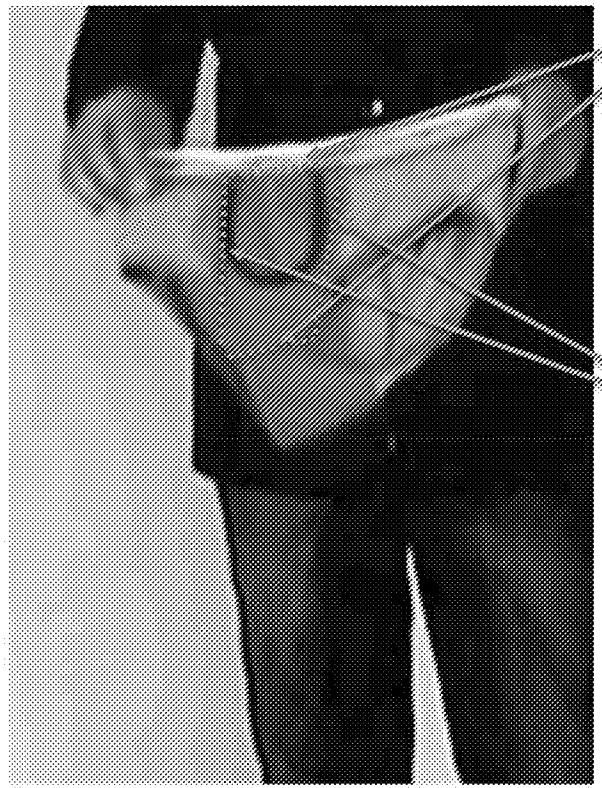 Top and Bottom Edges of Stretch Panel (at the Waistband Seam and First Seam, respectively) – approximately equal length to each other Side Edges of Stretch Panel – approximately equal length to each other Close up of ACI000040 at 00:14.

Either Anticipation by U.S. Patent Publication No. 2004/0025218 (Published Feb. 12, 2004) or Obviousness In View of Andrew Christian Style No. 9132 (Show-It Brief) and 9133 (Show-It Boxer) and EP O 476 818 or the '369 Patent

Claim 3	Exemplary Disclosure in Prior Art
	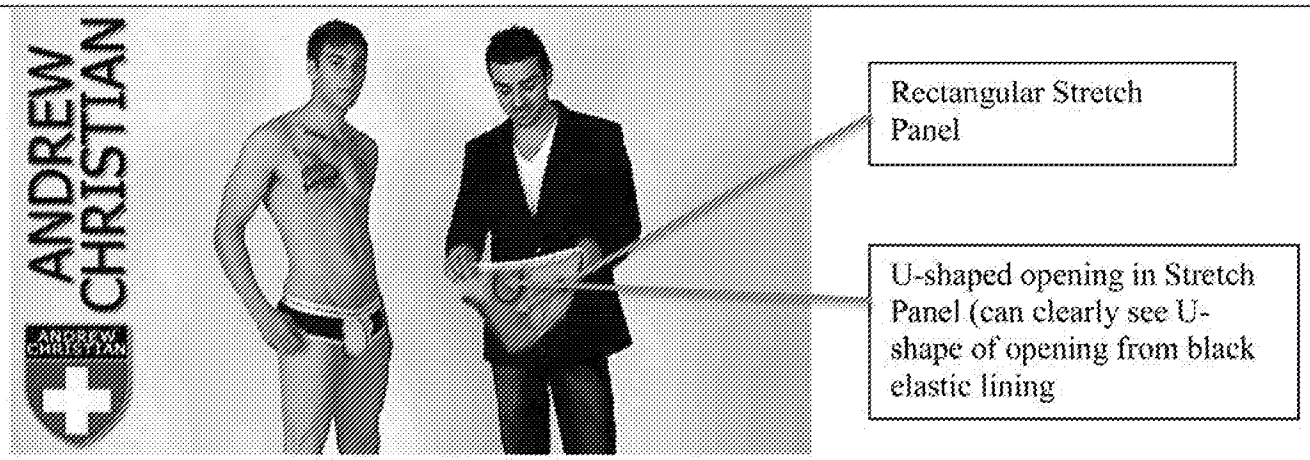 ACI000040 at 00:14. "The horseshoe shaped inner cup [that is, with a U-shaped opening] is lined by soft elastic that gently aids in the lifting…." March 2009 Press Release. *See also* March 6, 2009 Blog Entry and March 11, 2009 Blog Entry for the same description. To the extent Plaintiffs contend that the 9132 Show-It Brief does not expressly, implicitly, or inherently disclose a rectangular stretch panel, one of ordinary skill in the art would, based on one's knowledge and the 9132 Show-It Brief, understand how to modify the 9132 Show-It Brief to meet this limitation. **The 9133 Show-It Boxer is a garment wherein the stretch panel is a shape with four corners wherein the lengths of the top and bottom edges are approximately equal to each other and the lengths of the left and right edges are approximately equal to each other and the opening is U-shaped.** "The horseshoe shaped inner cup [that is, with a U-shaped opening] is lined by soft elastic that gently aids in the lifting…." March 2009 Press Release. *See also* March 6, 2009 Blog Entry and March 11, 2009 Blog Entry for the same description.

Claim 3	Exemplary Disclosure in Prior Art
	On information and belief, the 9133 Show-It Boxer utilized the same "Show-It Technology 2.0" utilized in the 9132 Show-It Brief, and an inside view of the 9133 Show-It Boxer would show a "inner cup" (that is, a Stretch Panel) inside the Front Portion as shown above in ACI000040 at 00:14. *See* Show-It 2009 Line Sheet at ACI000092, depicting both the 9132 Show-It Brief and the 9133 Show-It Boxer and describing "Show-It™ with Show-It Technology 2.0" with "our comfy cup." To the extent Plaintiffs contend that the 9133 Show-It Boxer does not expressly, implicitly, or inherently disclose a rectangular stretch panel, one of ordinary skill in the art would, based on one's knowledge and the 9133 Show-It Boxer, understand how to modify the 9133 Show-It Boxer to meet this limitation. To the extent Plaintiffs contend the '218 Publication does not expressly, implicitly, or inherently disclose a rectangular stretch panel, one of ordinary skill in the art would, based on one's knowledge and the '218 Publication, understand how to modify the disclosure of the '218 Publication to meet this limitation. Alternatively, one of ordinary skill could modify the '218 Publication in view of the 9132 Show-It Brief/9133 Show-It Boxer (disclosure above) to meet this limitation.

Claim 4	Exemplary Disclosure in Prior Art
[4] A garment according to claim 3 wherein the stretch panel comprises a fabric having a stretch of at least 30%.	The obviousness combinations asserted and disclosed in this chart for claim 4 are as follows: • '218 Publication in view of 9132 Show-It Brief/9133 Show-It Boxer • '218 Publication in view of 9132 Show-It Brief/9133 Show-It Boxer in further view of EP O 476 818 See above regarding claim 3. **The '218 Publication discloses a stretch panel comprising a fabric having a stretch of at least 30%. See,**

Claim 4	Exemplary Disclosure in Prior Art
	In particular, the only material disclosed by the '218 Publication is an elastically resilient four-way stretch material, as discussed in 1.3, above (fabric having a stretch of at least 30%). A "spandex-contained meshed cloth" is a fabric having a stretch of at least 30%. "[0021] . . . The cover panel is made of a piece of elastic, ventilating cloth (cotton cloth or spandex-contained meshed cloth), having top and bottom ends respectively fixedly fastened to the waistband 13 and the crotch 14." To the extent Plaintiffs contend the '218 Publication does not expressly, implicitly, or inherently disclose the stretch panel comprising a fabric having a stretch of at least 30%, one of ordinary skill in the art would, based on one's knowledge and the '218 Publication, understand how to modify the disclosure of the '218 Publication to meet this limitation. Alternatively, one with ordinary skill could modify the '218 Publication in view of the 9132 Show-It Brief/9133 Show-It Boxer (disclosure below) to meet this limitation. **The 9132 Show-It Brief includes a stretch panel comprising a fabric having a stretch of at least 30%. *See*,** The 9132 Show-It Brief's "stretch panel" comprises [redacted] a fabric with a stretch of at least 30%. February 5, 2009 Pattern Sheets at ACI000151. "The horseshoe shaped inner cup [Stretch Panel] is lined by soft elastic that gently aids in the lifting…." March 2009 Press Release. *See also* March 6, 2009 Blog Entry and March 11, 2009 Blog Entry for the same description. In the screenshot from ACI000040 below, Andrew Christian is demonstrating the stretch of "inner cup" (the Stretch Panel) by placing his hand through the opening of the Stretch Panel and into the Pouch:

Claim 4	Exemplary Disclosure in Prior Art
	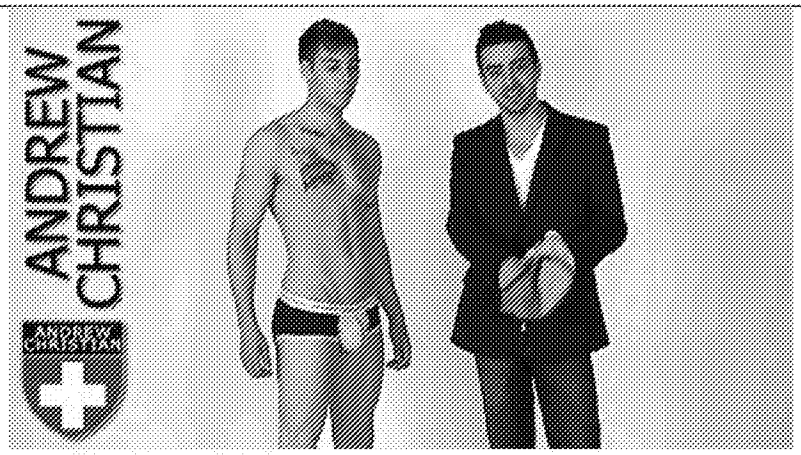 ACI000040 at 00.20. To the extent Plaintiffs contend the 9132 Show-It Brief does not expressly, implicitly, or inherently disclose the stretch panel comprising a fabric having a stretch of at least 30%, one of ordinary skill in the art would, based on one's knowledge and 9132 Show-It Brief, understand how to modify the 9132 Show-It Brief to meet this limitation. **The 9133 Show-It Boxer includes a stretch panel comprising a fabric having a stretch of at least 30%.** ***See,*** The 9133 Show-It Boxer's "stretch panel" comprises [redacted] a fabric with a stretch of at least 30%. February 5, 2009 Pattern Sheets at ACI000152. "The horseshoe shaped inner cup [Stretch Panel] is lined by soft elastic that gently aids in the lifting…." March 2009 Press Release. *See also* March 6, 2009 Blog Entry and March 11, 2009 Blog Entry for the same description. On information and belief, the 9133 Show-It Boxer utilized the same "Show-It Technology 2.0" utilized in the 9132 Show-It Brief, and an inside view of the 9133 Show-It Boxer would show a "inner cup" (that is, a Stretch Panel) inside the Front Portion as shown above in ACI000040 at 00:20. *See* Show-It 2009 Line Sheet at ACI000092,

Claim 4	Exemplary Disclosure in Prior Art
	depicting both the 9132 Show-It Brief and the 9133 Show-It Boxer and describing "Show-It™ with Show-It Technology 2.0" with "our comfy cup." To the extent Plaintiffs contend the 9133 Show-It Boxer does not expressly, implicitly, or inherently disclose the stretch panel comprising a fabric having a stretch of at least 30%, one of ordinary skill in the art would, based on one's knowledge and 9133 Show-It Boxer, understand how to modify the 9133 Show-It Boxer to meet this limitation.

Claim 5	Exemplary Disclosure in Prior Art
[5] A garment according to claim 1 wherein the top location is the waistband seam and the bottom location is the first seam, and a length measured along material of the front portion from the first seam to the waistband seam exceeds a length measured along the fabric of the stretch panel, when unstretched, by at least 30%.	The obviousness combinations asserted and disclosed in this chart for claim 5 are as follows: • '218 Publication in view of 9132 Show-It Brief/9133 Show-It Boxer • '218 Publication in view of 9132 Show-It Brief/9133 Show-It Boxer in further view of EP O 476 818 See above regarding claim 1. **The '218 Publication discloses a garment where the top location is the waistband seam and the bottom location is the first seam.** ***See,*** "[T]he cover panel having top and bottom ends . . . fixedly fastened to waistband" (Abstract) "[0021] . . . The cover panel is made of a piece of elastic, ventilating cloth (cotton cloth or spandex-contained meshed cloth), having top and bottom ends respectively fixedly fastened to the waistband 13 and the crotch 14." "[0023] . . . The top and bottom ends of the well-folded cover panel 40 are then respectively stitched to the waistband 13 and crotch 14 of the undergarment body 10."

Either Anticipation by U.S. Patent Publication No. 2004/0025218 (Published Feb. 12, 2004) or Obviousness In View of Andrew Christian Style No. 9132 (Show-It Brief) and 9133 (Show-It Boxer) and EP O 476 818 or the '369 Patent

Claim 5	Exemplary Disclosure in Prior Art
	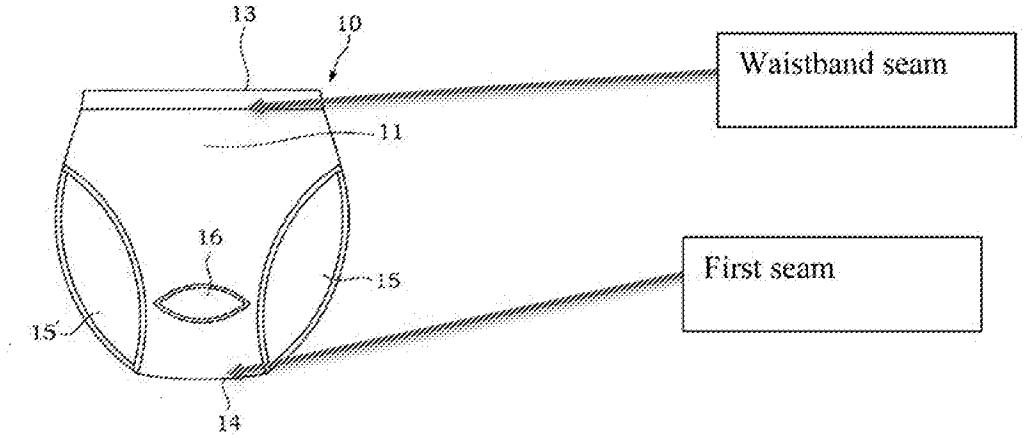 Fig. 1 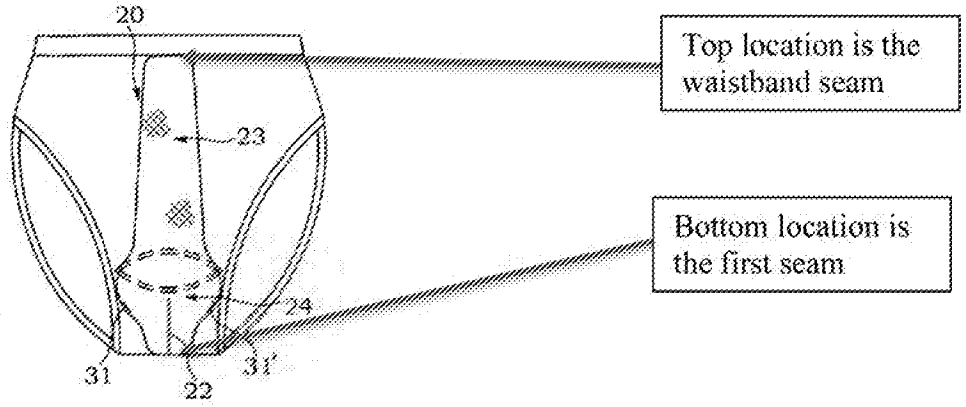 Fig.3

Either Anticipation by U.S. Patent Publication No. 2004/0025218 (Published Feb. 12, 2004) or Obviousness In View of Andrew Christian Style No. 9132 (Show-It Brief) and 9133 (Show-It Boxer) and EP O 476 818 or the '369 Patent

Claim 5	Exemplary Disclosure in Prior Art
	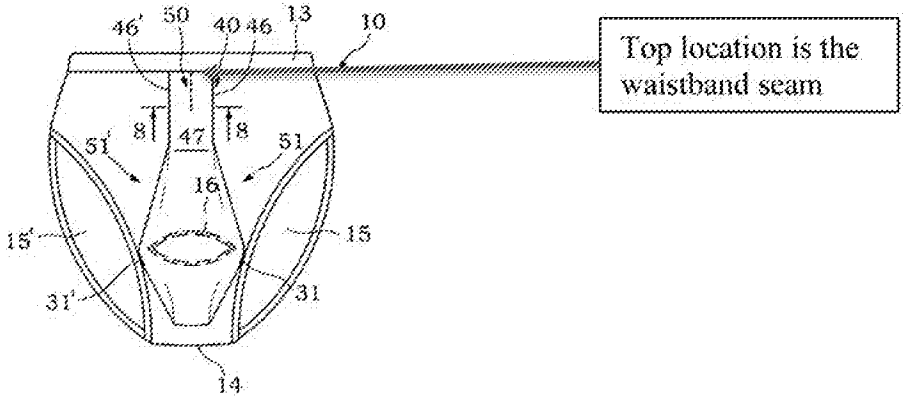 Fig.7 **The '218 Publication discloses the length measured along material of the front portion from the first seam to the waistband seam exceeds a length measured along the fabric of the stretch panel when unstretched, by at least 30%.** ***See,*** In particular, the length measured along material of the cover panel (front portion) from the first seam to the waistband seam exceeds a length measured along the fabric of the stretch panel when unstretched, as described in 1.4, above. This length exceeds that of the stretch panel when unstretched by at least 30% for the same reasons described in 1.4, above.

Either Anticipation by U.S. Patent Publication No. 2004/0025218 (Published Feb. 12, 2004) or Obviousness In View of Andrew Christian Style No. 9132 (Show-It Brief) and 9133 (Show-It Boxer) and EP O 476 818 or the '369 Patent

Claim 5	Exemplary Disclosure in Prior Art
	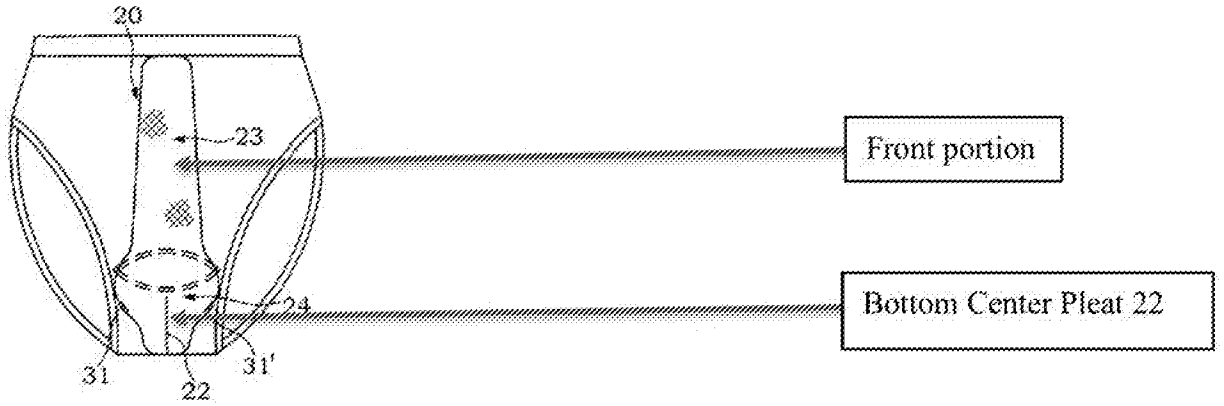 Fig.3 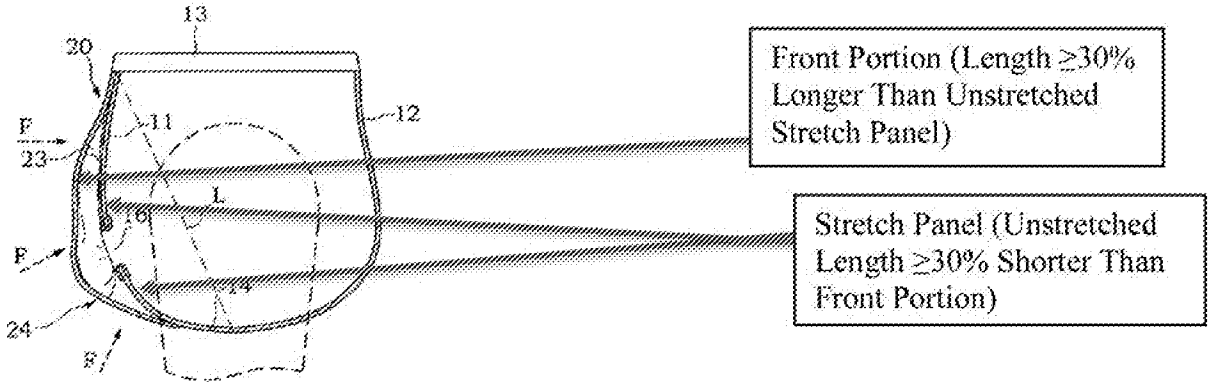 Fig.5

Either Anticipation by U.S. Patent Publication No. 2004/0025218 (Published Feb. 12, 2004) or Obviousness In View of Andrew Christian Style No. 9132 (Show-It Brief) and 9133 (Show-It Boxer) and EP O 476 818 or the '369 Patent

Claim 5	Exemplary Disclosure in Prior Art
	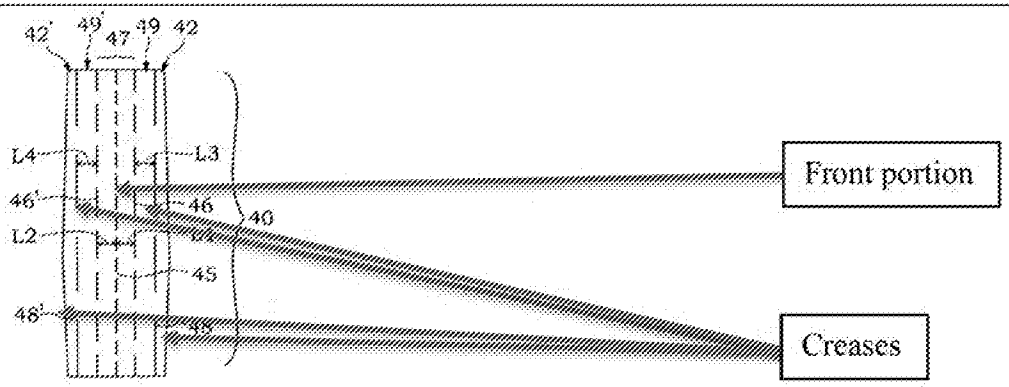 Fig.6

Claim 5	Exemplary Disclosure in Prior Art
	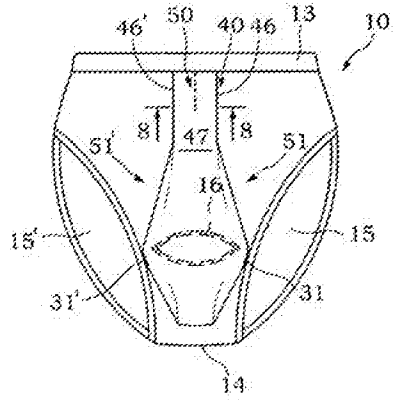 Fig.7 To the extent Plaintiffs contend the '218 Publication does not expressly, implicitly, or inherently disclose the length measured along material of the front portion from the first seam to the waistband seam exceeds a length measured along the fabric of the stretch panel when unstretched, by at least 30%, one of ordinary skill in the art would, based on one's knowledge and the '218 Publication, understand how to modify the disclosure of the '218 Publication to meet this limitation. Alternatively, one with ordinary skill could modify the '218 Publication in view of the 9132 Show-It Underwear/9133 Show-It Boxer (disclosure below) to meet this limitation. **The 9132 Show-It Brief is a garment where the top location is the waistband seam and the bottom location is the first seam.** ***See,***

Either Anticipation by U.S. Patent Publication No. 2004/0025218 (Published Feb. 12, 2004) or Obviousness In View of Andrew Christian Style No. 9132 (Show-It Brief) and 9133 (Show-It Boxer) and EP O 476 818 or the '369 Patent

Claim 5	Exemplary Disclosure in Prior Art
	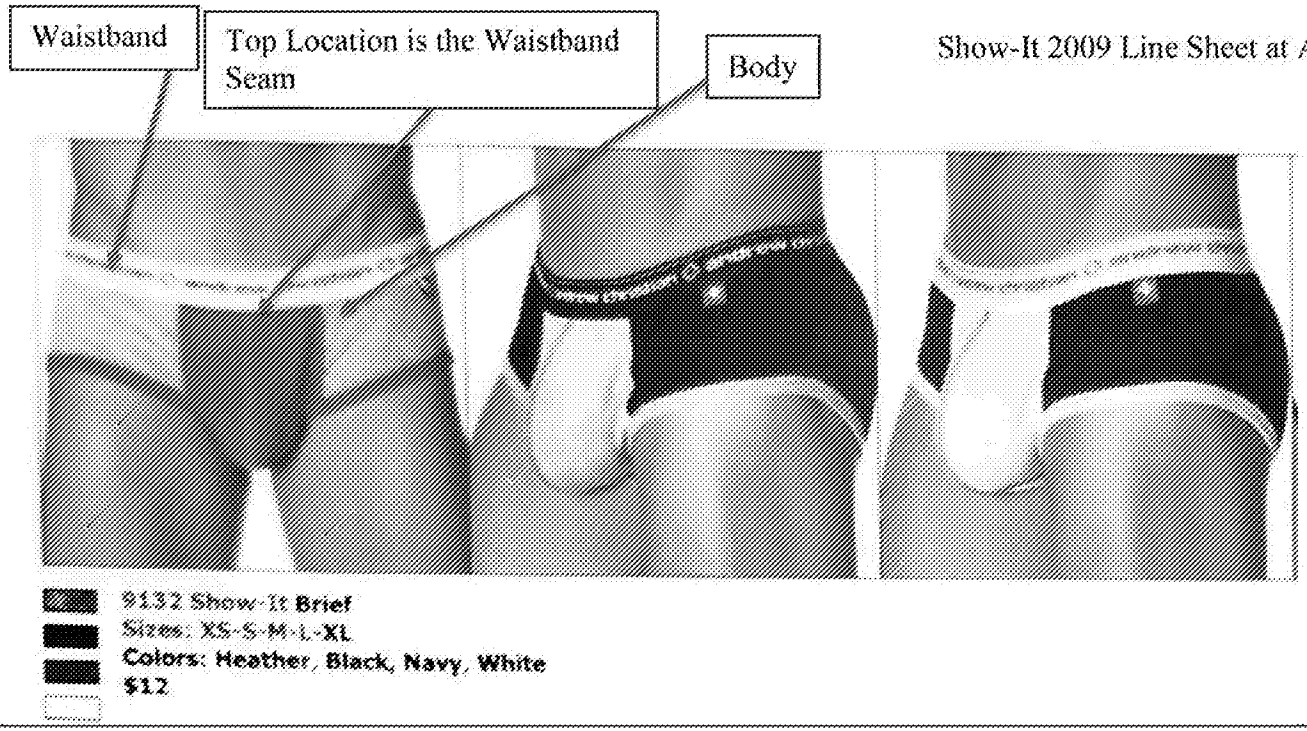 Show-It 2009 Line Sheet at ACI000092.

Either Anticipation by U.S. Patent Publication No. 2004/0025218 (Published Feb. 12, 2004) or Obviousness In View of Andrew Christian Style No. 9132 (Show-It Brief) and 9133 (Show-It Boxer) and EP O 476 818 or the '369 Patent

Claim 5	Exemplary Disclosure in Prior Art
	 March 6, 2009 Blog Entry. ACI000040 at 00:14.

Claim 5	Exemplary Disclosure in Prior Art
	The 9133 Show-It Boxer is a garment where the top location is the waistband seam and the bottom location is the first seam. ***See,*** 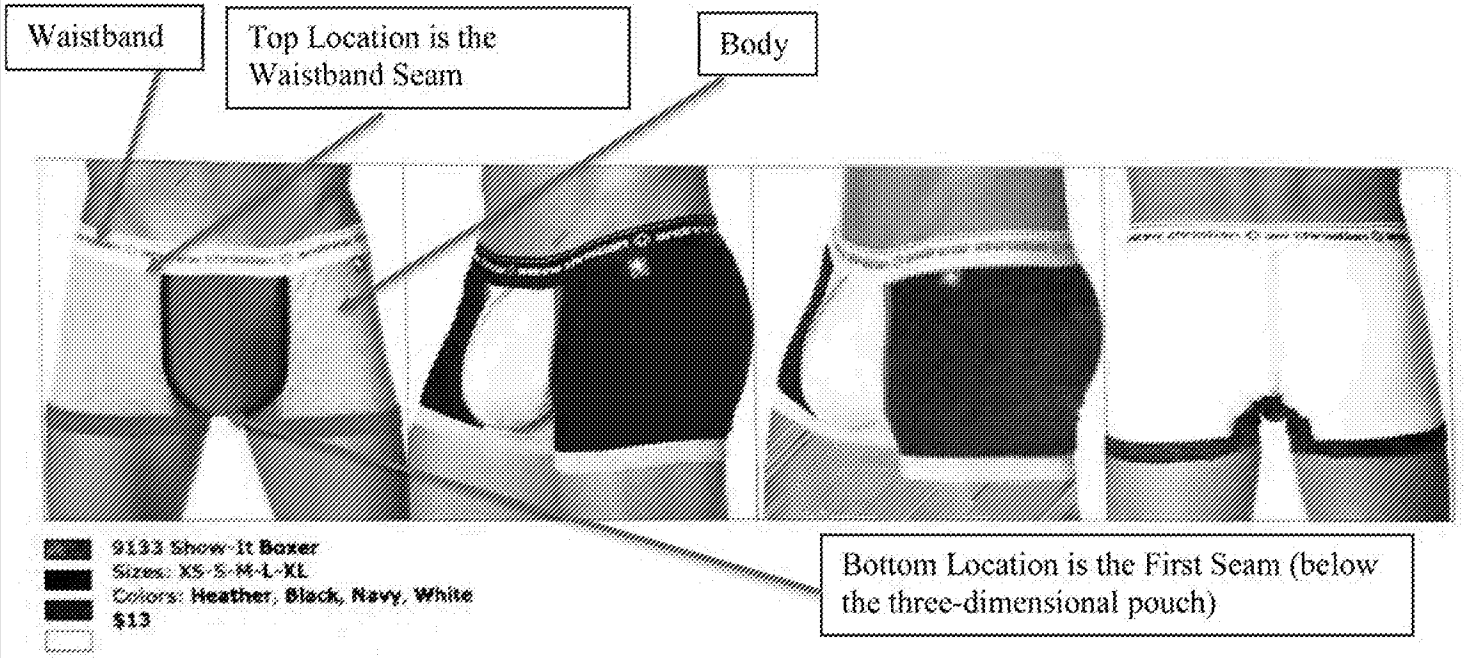 Show-It 2009 Line Sheet at ACI000092. **In the 9132 Show-It Brief, the length measured along material of the front portion from the first seam to the waistband seam exceeds a length measured along the fabric of the stretch panel when unstretched, by at least 30%.** ***See,*** The length of the material of the front portion from the first seam to the waistband seam must be at least 30% longer than the length measured along the material of the stretch panel from the first seam to the waistband seam, when

Claim 5	Exemplary Disclosure in Prior Art
	unstretched, to account for the creation of the three-dimensional pouch (the concave space) that is large enough to hold a wearer's genitals. 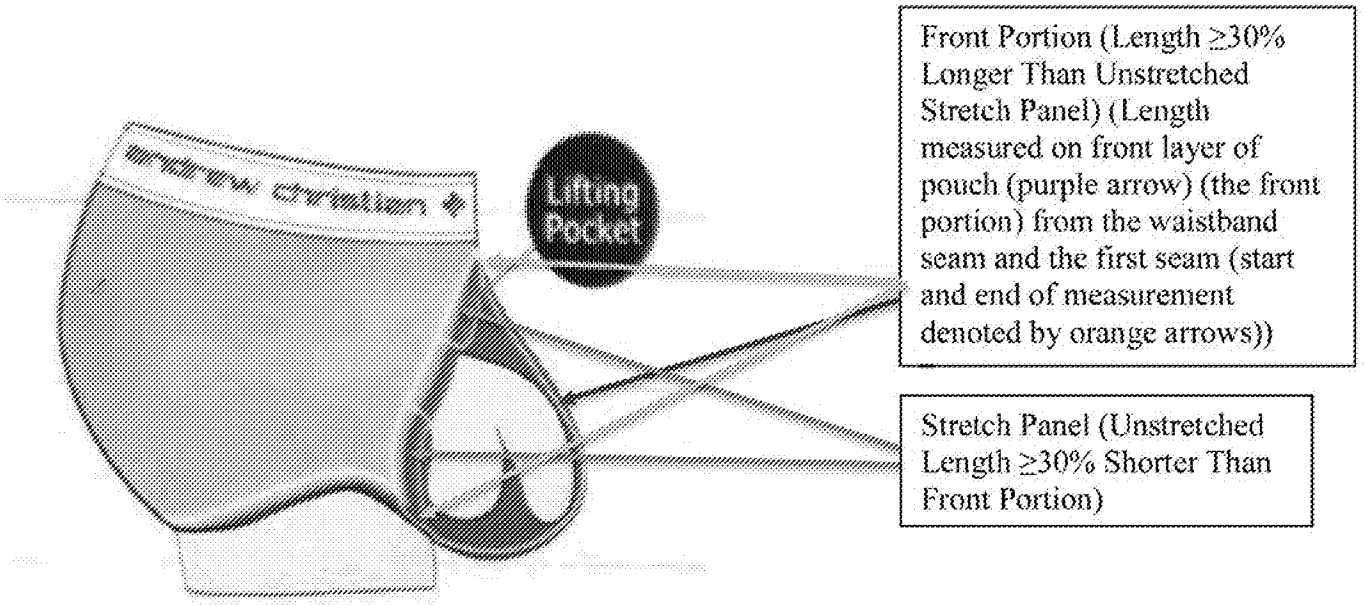 Show-It 2009-2010 Catalog at ACI000094. Identical image in March 11, 2009 Blog Entry. To the extent Plaintiffs contend the 9132 Show-It Brief does not expressly, implicitly, or inherently disclose the length measured along material of the front portion from the first seam to the waistband seam exceeds a length measured along the fabric of the stretch panel when unstretched, by at least 30%, one of ordinary skill in the art would, based on one's knowledge and the 9132 Show-It Brief, understand how to modify the 9132 Show-It Brief to meet this limitation.

Claim 5	Exemplary Disclosure in Prior Art
	In the 9133 Show-It Boxer, the length measured along material of the front portion from the first seam to the waistband seam exceeds a length measured along the fabric of the stretch panel when unstretched, by at least 30%. ***See,*** The length of the material of the front portion from the first seam to the waistband seam must be at least 30% longer than the length measured along the material of the stretch panel from the first seam to the waistband seam, when unstretched, to account for the creation of the three-dimensional pouch (the concave space) that is large enough to hold a wearer's genitals. On information and belief, the 9133 Show-It Boxer utilized the same "Show-It Technology 2.0" utilized in the 9132 Show-It Brief, and an inside view of the 9133 Show-It Boxer would show a "inner cup" (that is, a Stretch Panel) inside the Front Portion as shown above in Show-It 2009-2010 Catalog at ACI000094. *See* Show-It 2009 Line Sheet at ACI000092, depicting both the 9132 Show-It Brief and the 9133 Show-It Boxer and describing "Show-It™ with Show-It Technology 2.0" with "our comfy cup." To the extent Plaintiffs contend the 9133 Show-It Boxer does not expressly, implicitly, or inherently disclose the length measured along material of the front portion from the first seam to the waistband seam exceeds a length measured along the fabric of the stretch panel when unstretched, by at least 30%, one of ordinary skill in the art would, based on one's knowledge and the 9133 Show-It Boxer, understand how to modify the 9133 Show-It Boxer to meet this limitation.

Claim 6	Exemplary Disclosure in Prior Art
[6] A garment according to claim 1 wherein the garment is a pair of undershorts.	The obviousness combinations asserted and disclosed in this chart for claim 6 are as follows: • '218 Publication in view of 9132 Show-It Brief/9133 Show-It Boxer • '218 Publication in view of 9132 Show-It Brief/9133 Show-It Boxer in further view of EP O 476 818 See above regarding claim 1.

Either Anticipation by U.S. Patent Publication No. 2004/0025218 (Published Feb. 12, 2004) or Obviousness In View of Andrew Christian Style No. 9132 (Show-It Brief) and 9133 (Show-It Boxer) and EP O 476 818 or the '369 Patent

Claim 6	Exemplary Disclosure in Prior Art
	The '218 Publication discloses a pair of undershorts. ***See,*** "A men's undergarment" (Abstract) "MEN'S UNDERGARMENT" (Title) "[0002] The present invention provides an undergarment for men and, more particularly, to such a men's undergarment that is good for the health of the user's genitals." 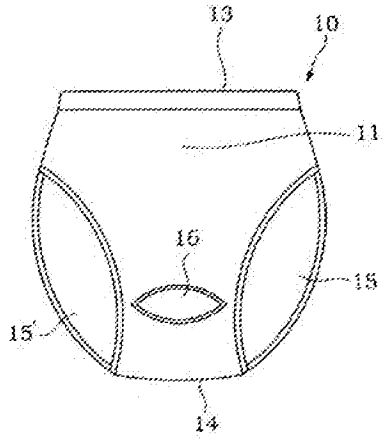 Fig. 1

Either Anticipation by U.S. Patent Publication No. 2004/0025218 (Published Feb. 12, 2004) or Obviousness In View of Andrew Christian Style No. 9132 (Show-It Brief) and 9133 (Show-It Boxer) and EP O 476 818 or the '369 Patent

Claim 6	Exemplary Disclosure in Prior Art
	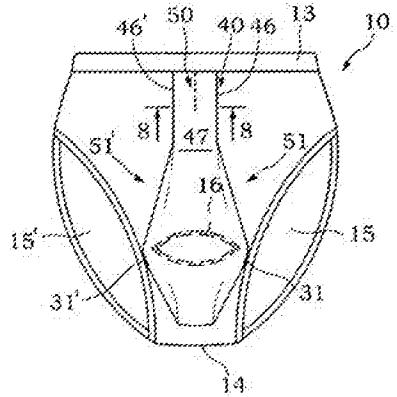 Fig.7 To the extent Plaintiffs contend the '218 Publication does not expressly, implicitly, or inherently disclose a pair of undershorts, one of ordinary skill in the art would, based on one's knowledge and the '218 Publication, understand how to modify the disclosure of the '218 Publication to meet this limitation. Alternatively, one of ordinary skill could modify the '218 Publication in view of the 9132 Show-It Brief/9133 Show-It Boxer (disclosure below) to meet this limitation. **The 9132 Show-It Brief is a pair of undershorts.** ***See,***

Either Anticipation by U.S. Patent Publication No. 2004/0025218 (Published Feb. 12, 2004) or Obviousness In View of Andrew Christian Style No. 9132 (Show-It Brief) and 9133 (Show-It Boxer) and EP O 476 818 or the '369 Patent

Claim 6	Exemplary Disclosure in Prior Art
	 Show-It 2009 Line Sheet at ACI000092.

Claim 6	Exemplary Disclosure in Prior Art
	The 9133 Show-It Boxer is a pair of undershorts. ***See,*** Show-It 2009 Line Sheet at ACI000092

Claim 7	Exemplary Disclosure in Prior Art
[7] A garment according to claim 1 wherein the stretch panel comprises a fabric different from a fabric of the body.	The obviousness combinations asserted and disclosed in this chart for claim 7 are as follows: • '218 Publication in view of 9132 Show-It Brief/9133 Show-It Boxer • '218 Publication in view of 9132 Show-It Brief/9133 Show-It Boxer in further view of EP O 476 818 See above regarding claim 1. **The '218 Publication discloses a stretch panel comprising a fabric different from a fabric of the body.** ***See,***

Claim 7	Exemplary Disclosure in Prior Art
	"[0030] 1. The cover panel 20 or 40 can be made of ventilating or meshed elastic cloth material different from the undergarment body 10, achieving a satisfactory ventilation effect." To the extent Plaintiffs contend the '218 Publication does not expressly, implicitly, or inherently disclose a stretch panel comprises a fabric different from a fabric of the body, one of ordinary skill in the art would, based on one's knowledge and the '218 Publication, understand how to modify the disclosure of the '218 Publication to meet this limitation. Alternatively, one of ordinary skill could modify the '218 Publication in view of the 9132 Show-It Brief/9133 Show-It Boxer (disclosure below) to meet this limitation. **The 9132 Show-It Brief includes a stretch panel comprising a fabric different from a fabric of the body.** ***See,*** As shown below in the screenshot from ACI000040, the stretch panel (the inner cup) of the pictured 9132 Show-It Brief is made from a red fabric, while at least some of the body is made from a different gray fabric. 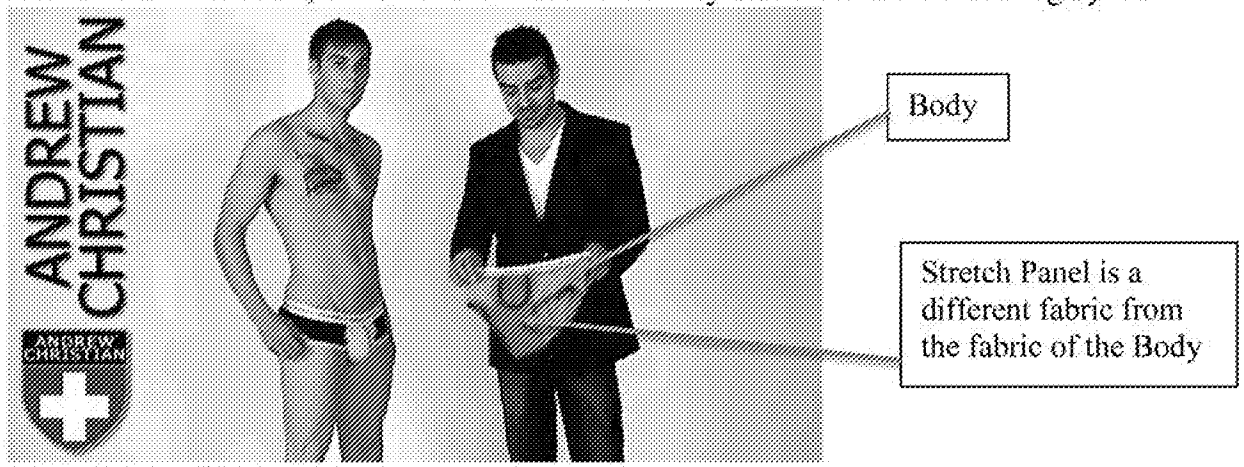 ACI000040 at 00:14.

Claim 7	Exemplary Disclosure in Prior Art
	"The horseshoe shaped inner cup is lined by soft elastic that gently aids in the lifting…." March 2009 Press Release. *See also* March 6, 2009 Blog Entry and March 11, 2009 Blog Entry for the same description. The Stretch Panel is also lined by (comprises) a "soft elastic" – the "soft elastic" is a fabric different from the fabric of the body. To the extent Plaintiffs contend the 9132 Show-It Brief does not expressly, implicitly, or inherently disclose a stretch panel comprises a fabric different from a fabric of the body, one of ordinary skill in the art would, based on one's knowledge and the 9132 Show-It Brief, understand how to modify the disclosure of the 9132 Show-It Brief to meet this limitation. **The 9133 Show-It Boxer includes a stretch panel comprising a fabric different from a fabric of the body.** ***See,*** On information and belief, the 9133 Show-It Boxer utilized the same "Show-It Technology 2.0" utilized in the 9132 Show-It Brief, and an inside view of the 9133 Show-It Boxer would show a "inner cup" (that is, a Stretch Panel) inside the Front Portion in a different fabric from the Body, as shown above in ACI000040 at 00:14. Just like the 9132 Show-It Briefs, the 9133 Show-It Boxers have "contrasting" pouches, and the inside of the pouch (the "inner cup") (the Stretch Panel) will also be a "contrasting" fabric from the body. *See* Show-It 2009 Line Sheet at ACI000092, depicting both the 9132 Show-It Brief and the 9133 Show-It Boxer and describing "Show-It™ with Show-It Technology 2.0" with "our comfy cup." "The horseshoe shaped inner cup is lined by soft elastic that gently aids in the lifting…." March 2009 Press Release. *See also* March 6, 2009 Blog Entry and March 11, 2009 Blog Entry for the same description. The Stretch Panel is also lined by (comprises) a "soft elastic" – the "soft elastic" is a fabric different from the fabric of the body. To the extent Plaintiffs contend the 9133 Show-It Boxer does not expressly, implicitly, or inherently disclose a stretch panel comprises a fabric different from a fabric of the body, one of ordinary skill in the art would, based on one's knowledge and the 9133 Show-It Boxer, understand how to modify the disclosure of the 9133 Show-It Boxer to meet this limitation.

Either Anticipation by U.S. Patent Publication No. 2004/0025218 (Published Feb. 12, 2004) or Obviousness In View of Andrew Christian Style No. 9132 (Show-It Brief) and 9133 (Show-It Boxer) and EP O 476 818 or the '369 Patent

Claim 8	Exemplary Disclosure in Prior Art
[8] A garment according to claim 1 wherein the opening has a width in excess of 2 cm.	The obviousness combinations asserted and disclosed in this chart for claim 8 are as follows: • '218 Publication in view of 9132 Show-It Brief/9133 Show-It Boxer • '218 Publication in view of 9132 Show-It Brief/9133 Show-It Boxer in further view of EP O 476 818 See above regarding claim 1. **The '218 Publication discloses an opening with a width in excess of 2 cm. *See*,** In particular, the opening must have a width in excess of 2 cm to accommodate the male genitals. "[0009] . . . The cover panel defines with the front panel a penis receiving space above the opening of the front panel, and a scrotum receiving space below the opening of the front panel." "[0021] . . . The front panel 11 has an opening 16 corresponding to the genitals." "[0025] Referring to FIGS. 4 and 5, when the undergarment of the first embodiment of the present invention put on the user's body, the user's penis and scrotum are extended out of the undergarment body 10 through the opening 16, keeping the scrotum received in the scrotum receiving space 24 and the penis received in the penis receiving space 23." "[00028] Basically, the water drop-like three-dimensional profile of the cover panel 40 fits the genitals of a matured man." To the extent Plaintiffs contend the '218 Publication does not expressly, implicitly, or inherently disclose an opening with a width in excess of 2 cm, one of ordinary skill in the art would, based on one's knowledge and the '218 Publication, understand how to modify the disclosure of the '218 Publication to meet this limitation. **Furthermore, the 9132 Show-It Brief includes an opening with a width in excess of 2 cm. *See*,**

Claim 8	Exemplary Disclosure in Prior Art
	The opening in the "inner cup" (the Stretch Panel) must necessarily have a width in excess of 2 cm for the (adult) male genitalia to fit through the opening. 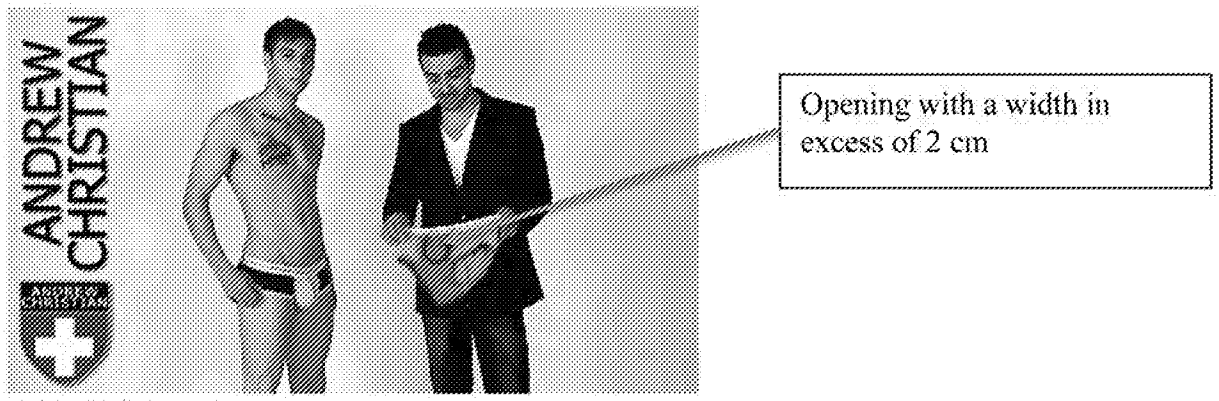 ACI000040 at 00:14. **The 9133 Show-It Boxer includes an opening with a width in excess of 2 cm.** ***See,*** The opening in the "inner cup" (the Stretch Panel) must necessarily have a width in excess of 2 cm for the (adult) male genitalia to fit through the opening. On information and belief, the 9133 Show-It Boxer utilized the same "Show-It Technology 2.0" utilized in the 9132 Show-It Brief, and an inside view of the 9133 Show-It Boxer would show a "inner cup" (that is, a Stretch Panel) with an opening with a width in excess of 2 cm.

Claim 9	Exemplary Disclosure in Prior Art
[9] A garment according to claim 1 wherein:	The obviousness combinations asserted and disclosed in this chart for claim 9 are as follows: • '218 Publication in view of 9132 Show-It Brief/9133 Show-It Boxer

Claim 9	Exemplary Disclosure in Prior Art
the front portion depends downwardly from the waistband and the front portion is formed to provide the pouch at a mid-section thereof; the stretch panel is positioned to be disposed forward of a wearer's perineum when the garment is worn, whereby, in use, a scrotum of a wearer of the garment is supported underneath by the stretch panel to contain a wearer's penis and scrotum in the pouch.	• '218 Publication in view of 9132 Show-It Brief/9133 Show-It Boxer in further view of EP O 476 818 See above regarding claim 1. **The '218 Publication discloses a front portion which depends downwardly from the waistband and the front portion is formed to provide a pouch at a mid-section thereof; the stretch panel positioned to be disposed forward of a wearer's perineum when the garment is worn, whereby, in use, a scrotum of a wearer of the garment is supported underneath by the stretch panel to contain a wearer's penis and scrotum in the pouch.** ***See,*** In particular, the '218 Publication discloses the cover panel (front portion) attached to the waistband seam (depending downwardly from the waistband), which forms a pouch in conjunction with the stretch panel, as described in 1.3 and 5, above. The stretch panel is disposed forward of a wearer's perineum. When in use, the wearer's penis and scrotum is supported underneath by the stretch panel to contain a wearer's penis and scrotum in the pouch. "[0009] . . . The cover panel defines with the front panel a penis receiving space above the opening of the front panel, and a scrotum receiving space below the opening of the front panel." "[0013] FIG. 4 is a schematic front view of the first embodiment of the present invention, showing the genitals received in the penis receiving space and the scrotum receiving space." "[0021] . . . When installed, the cover panel defines with the front panel 11 of the undergarment body 10 a penis receiving space and the crotch 14 a scrotum receiving space." "[0022] . . . When fastened to the undergarment body 10, the upper part of the cover panel 20 defines with the undergarment body 10 a penis receiving space 23 above the opening 16 (see also FIG. 1) for receiving the user's penis, and the side flaps 21 and 21' define with the undergarment body 10a scrotum receiving space 24 below the opening 16 for receiving the user's scrotum."

Either Anticipation by U.S. Patent Publication No. 2004/0025218 (Published Feb. 12, 2004) or Obviousness In View of Andrew Christian Style No. 9132 (Show-It Brief) and 9133 (Show-It Boxer) and EP O 476 818 or the '369 Patent

Claim 9	Exemplary Disclosure in Prior Art
	"[0025] Referring to FIGS. 4 and 5, when the undergarment of the first embodiment of the present invention put on the user's body, the user's penis and scrotum are extended out of the undergarment body 10 through the opening 16, keeping the scrotum received in the scrotum receiving space 24 and the penis received in the penis receiving space 23. When the user adjusted the undergarment to the best fit position, the cover panel 20 is forced by its elastic material property to cover the penis and to secure the penis to the inside of the penis receiving space 23. At the same time, the cover panel 20 supports the scrotum in the scrotum receiving space 24." "[0026] Referring to FIGS. 9-11, when the undergarment of the second embodiment of the present invention put on the user's body, the user's penis and scrotum are extended out of the undergarment body 10 through the opening 16, keeping the penis extended upwards and received in the tubular penis receiving space 53 defined between the front panel 11 of the undergarment body 10 and the front cover portion 47 and side cover portions 49 and 49' of the cover panel 40, and the scrotum received in the bag-like scrotum receiving space 54 defined between the front panel 11 of the undergarment body 10 and the cover panel 40 below the opening 16." 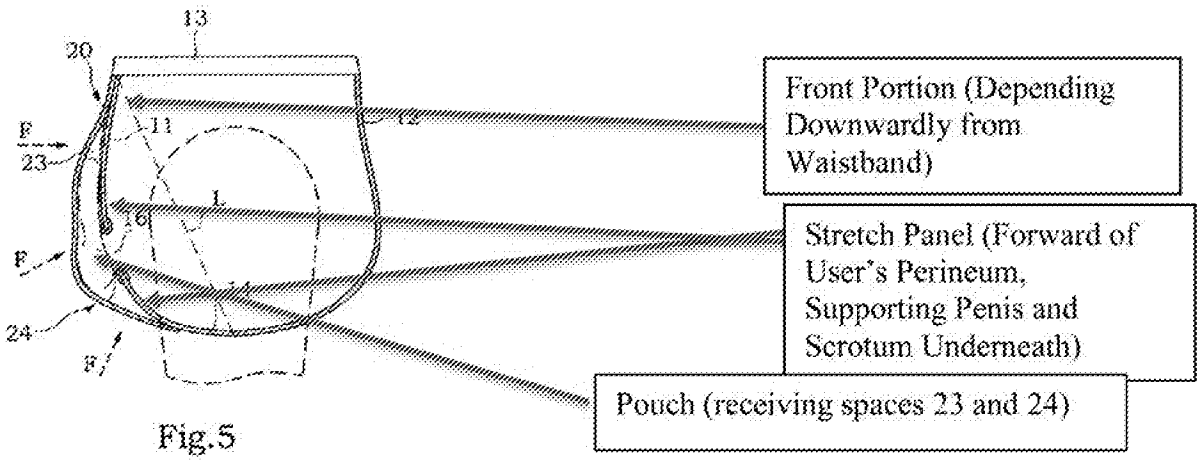 Fig.5

Either Anticipation by U.S. Patent Publication No. 2004/0025218 (Published Feb. 12, 2004) or Obviousness In View of Andrew Christian Style No. 9132 (Show-It Brief) and 9133 (Show-It Boxer) and EP O 476 818 or the '369 Patent

Claim 9	Exemplary Disclosure in Prior Art
	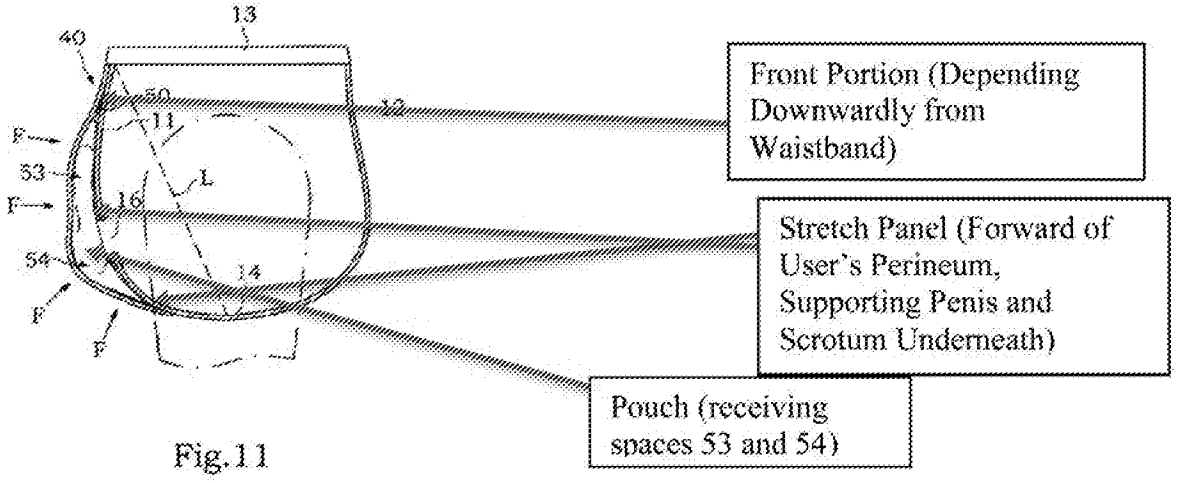 Fig. 11 **Furthermore, the 9132 Show-It Brief includes a front portion which depends downwardly from the waistband and the front portion is formed to provide a pouch at a mid-section thereof; the stretch panel positioned to be disposed forward of a wearer's perineum when the garment is worn, whereby, in use, a scrotum of a wearer of the garment is supported underneath by the stretch panel to contain a wearer's penis and scrotum in the pouch.** ***See,***

Either Anticipation by U.S. Patent Publication No. 2004/0025218 (Published Feb. 12, 2004) or Obviousness In View of Andrew Christian Style No. 9132 (Show-It Brief) and 9133 (Show-It Boxer) and EP O 476 818 or the '369 Patent

Claim 9	Exemplary Disclosure in Prior Art
	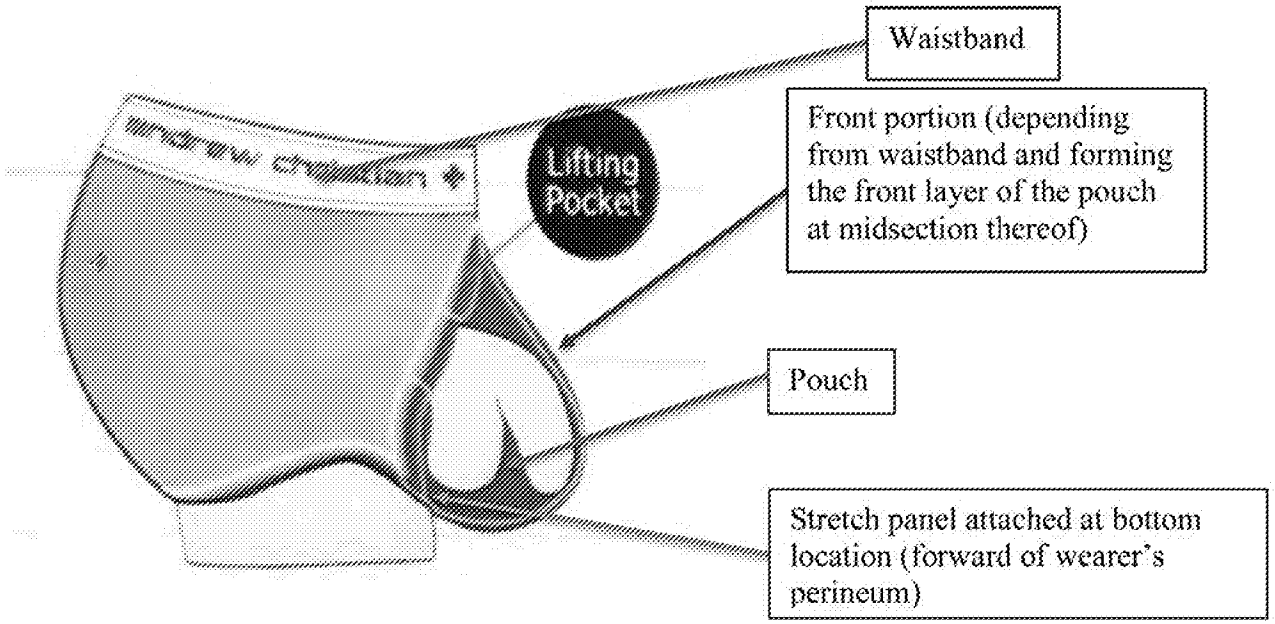 Show-It 2009-2010 Catalog at ACI000094. The scrotum of the wearer is supported underneath by the stretch panel (the inner cup or comfy cup of the 9132 Show-It Brief) to contain the wearer's penis and scrotum in the pouch: "Our Comfy Cup™ cradles and lifts…" Show-It 2009 Line Sheet at ACI000092. "Show-It Technology 2.0 features a hidden 'comfy cup' that gently lifts and presents the package to the front." March 3, 2009 Press Release. *See also* March 6, 2009 Blog Entry and March 11, 2009 Blog Entry for the same description.

Either Anticipation by U.S. Patent Publication No. 2004/0025218 (Published Feb. 12, 2004) or Obviousness In View of Andrew Christian Style No. 9132 (Show-It Brief) and 9133 (Show-It Boxer) and EP O 476 818 or the '369 Patent

Claim 9	Exemplary Disclosure in Prior Art
	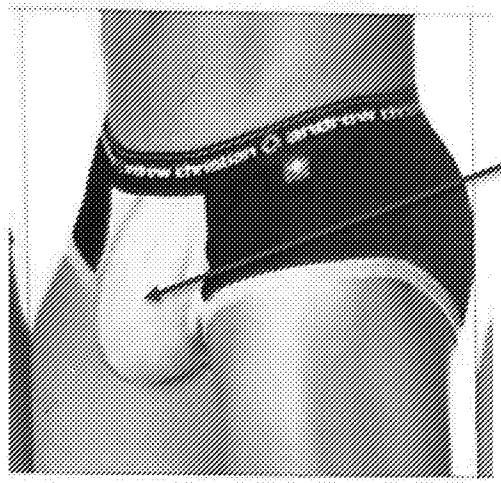 Front portion (in gray) (depending from waistband and forming the outmost layer of the pouch at midsection thereof) Show-It 2009 Line Sheet at ACI000092. To the extent Plaintiffs contend the 9132 Show-It Brief does not expressly, implicitly, or inherently disclose a stretch panel positioned to be disposed forward of a wearer's perineum when the garment is worn, whereby, in use, a scrotum of a wearer of the garment is supported underneath by the stretch panel to contain a wearer's penis and scrotum in the pouch, one of ordinary skill in the art would, based on one's knowledge and the 9132 Show-It Brief, understand how to modify the 9132 Show-It Brief to meet this limitation. **The 9133 Show-It Boxer includes a front portion which depends downwardly from the waistband and the front portion is formed to provide a pouch at a mid-section thereof; the stretch panel positioned to be disposed forward of a wearer's perineum when the garment is worn, whereby, in use, a scrotum of a wearer of the garment is supported underneath by the stretch panel to contain a wearer's penis and scrotum in the pouch.** ***See,***

Either Anticipation by U.S. Patent Publication No. 2004/0025218 (Published Feb. 12, 2004) or Obviousness In View of Andrew Christian Style No. 9132 (Show-It Brief) and 9133 (Show-It Boxer) and EP O 476 818 or the '369 Patent

Claim 9	Exemplary Disclosure in Prior Art
	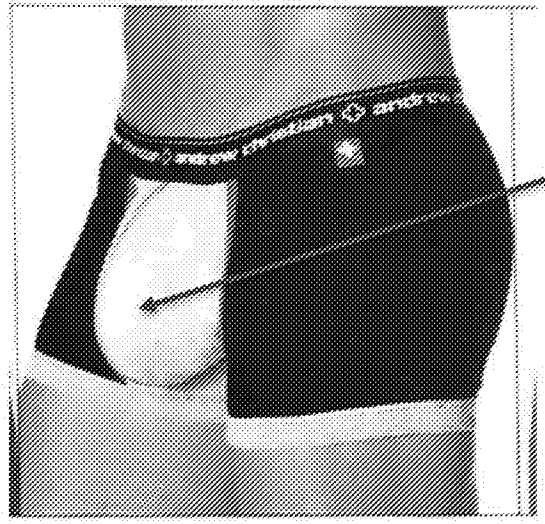 Front portion (in gray) (depending from waistband and forming pouch at midsection thereof) Show-It 2009 Line Sheet at ACI000092. "The scrotum of the wearer is supported underneath by the stretch panel to contain the wearer's penis and scrotum in the pouch": "Our Comfy Cup™ cradles and lifts…" Show-It 2009 Line Sheet at ACI000092. "Show-It Technology 2.0 features a hidden 'comfy cup' that gently lifts and presents the package to the front." March 3, 2009 Press Release. *See also* March 6, 2009 Blog Entry and March 11, 2009 Blog Entry for the same description. To the extent Plaintiffs contend the 9133 Show-It Boxer does not expressly, implicitly, or inherently disclose a stretch panel positioned to be disposed forward of a wearer's perineum when the garment is worn, whereby, in use, a scrotum of a wearer of the garment is supported underneath by the stretch panel to contain a wearer's penis and scrotum in the pouch, one of ordinary skill in the art would, based on one's knowledge and the 9133 Show-It Boxer, understand how to modify the 9133 Show-It Boxer to meet this limitation.

Claim 9	Exemplary Disclosure in Prior Art

Claim 10	Exemplary Disclosure in Prior Art
[10] A garment according to claim 1, wherein the elastically resilient four-way stretch material is comprised of a spandex blend.	The obviousness combinations asserted and disclosed in this chart for claim 10 are as follows: • '218 Publication in view of 9132 Show-It Brief/9133 Show-It Boxer • '218 Publication in view of 9132 Show-It Brief/9133 Show-It Boxer in further view of EP O 476 818 See above regarding claim 1. **The '218 Publication discloses elastically resilient four-way stretch material comprised of a spandex blend.** ***See,*** In particular, the only material disclosed by the '218 Publication is elastic, ventilating cloth, specifically including a spandex-contained mesh cloth (elastically resilient four-way stretch material). "[0021] . . . The cover panel is made of a piece of elastic, ventilating cloth (cotton cloth or spandex-contained meshed cloth), having top and bottom ends respectively fixedly fastened to the waistband 13 and the crotch 14." **Furthermore, the 9132 Show-It Brief discloses elastically resilient four-way stretch material comprised of a spandex blend.** ***See,*** The 9132 Show-It Brief's "stretch panel" comprises [redacted] February 5, 2009 Pattern Sheets at ACI000152. In ACI000040, Andrew Christian is demonstrating the elastically resilient four way stretch of the "inner cup" (the Stretch Panel) by placing his hand through the opening of the Stretch Panel and into the Pouch, as the "inner cup" (the Stretch Panel) stretches in length and width (four-way stretch):

Either Anticipation by U.S. Patent Publication No. 2004/0025218 (Published Feb. 12, 2004) or Obviousness In View of Andrew Christian Style No. 9132 (Show-It Brief) and 9133 (Show-It Boxer) and EP O 476 818 or the '369 Patent

Claim 10	Exemplary Disclosure in Prior Art
	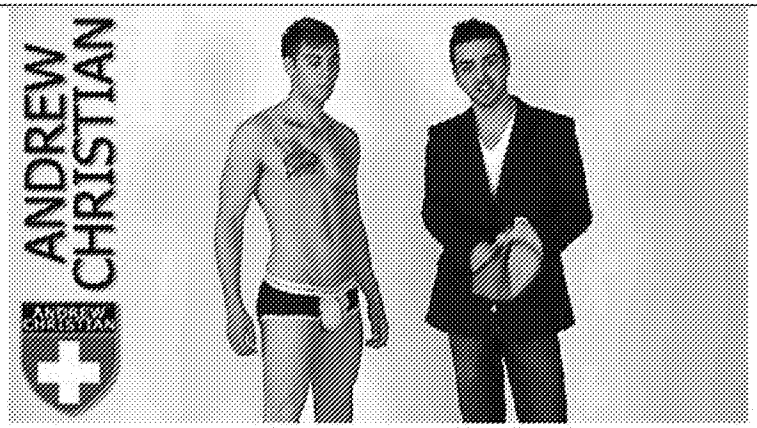 ACI000040 at 00:20. The "inner cup" (the Stretch Panel) returns to its original shape (that is, it has "substantial elastic recovery toward its pre-stretching size and shape" and is therefore elastically resilient), once Andrew Christian removes his hand: 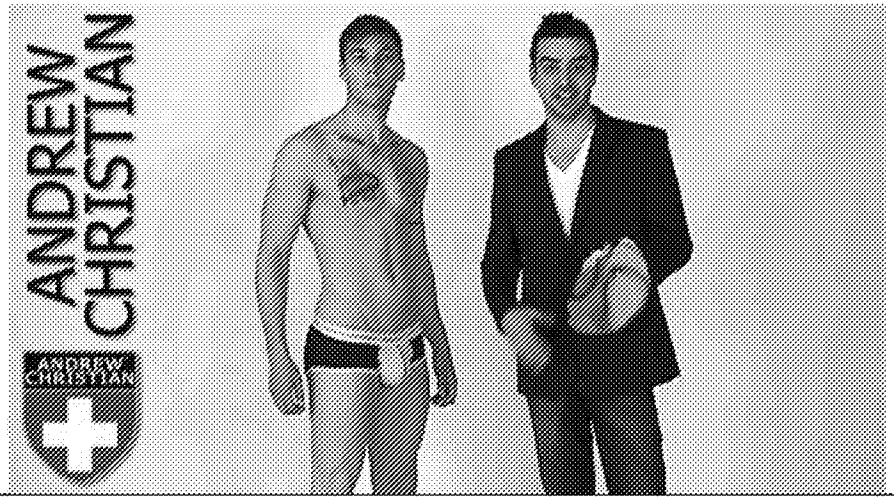

Claim 10	Exemplary Disclosure in Prior Art
	ACI000040 at 00.23. To the extent Plaintiffs contend the 9132 Show-It Brief does not expressly, implicitly, or inherently disclose elastically resilient four-way stretch material comprised of a spandex blend, one of ordinary skill in the art would, based on one's knowledge and the 9132 Show-It Brief, understand how to modify the 9132 Show-It Brief to meet this limitation, as spandex blends were well-known and often used in male undergarments, among other garments, in the 2009 timeframe. **The 9133 Show-It Boxer discloses elastically resilient four-way stretch material comprised of a spandex blend.** ***See,*** The 9133 Show-It Boxer's "stretch panel" comprises [redacted] February 5, 2009 Pattern Sheets at ACI000151. On information and belief, the 9133 Show-It Boxer utilized the same "Show-It Technology 2.0" utilized in the 9132 Show-It Brief, and an inside view of the 9133 Show-It Boxer would show a "inner cup" (that is, a Stretch Panel) inside the Front Portion as shown above in ACI000040 at 00:20 and 00:23. *See* Show-It 2009 Line Sheet at ACI000092, depicting both the 9132 Show-It Brief and the 9133 Show-It Boxer and describing "Show-It™ with Show-It Technology 2.0" with "our comfy cup." To the extent Plaintiffs contend the 9133 Show-It Boxer does not expressly, implicitly, or inherently disclose elastically resilient four-way stretch material comprised of a spandex blend, one of ordinary skill in the art would, based on one's knowledge and the 9133 Show-It Boxer, understand how to modify the 9133 Show-It Boxer to meet this limitation, as spandex blends were well-known and often used in male undergarments, among other garments, in the 2009 timeframe.

Either Anticipation by U.S. Patent Publication No. 2004/0025218 (Published Feb. 12, 2004) or Obviousness In View of Andrew Christian Style No. 9132 (Show-It Brief) and 9133 (Show-It Boxer) and EP O 476 818 or the '369 Patent

Claim 13	Exemplary Disclosure in Prior Art
[13] A garment according to claim 1 wherein the opening has a U-shape when the stretch panel is in a relaxed state.	The obviousness combinations asserted and disclosed in this chart for claim 13 are as follows: • '218 Publication in view of 9132 Show-It Brief/9133 Show-It Boxer • '218 Publication in view of 9132 Show-It Brief/9133 Show-It Boxer in further view of EP O 476 818 See above regarding claim 1. One with ordinary skill in the art would, based on one's knowledge and the disclosure in the '218 Publication, understand how to modify the disclosure of the '218 Publication to meet this limitation. Alternatively, one of ordinary skill could modify the '218 Publication in view of the 9132 Show-It Brief/9133 Show-It Boxer (disclosure below) to meet this limitation. **The 9132 Show-It Brief's opening has a U-shape when the stretch panel is in a relaxed state.** ***See,*** "The horseshoe shaped inner cup [Stretch Panel] is lined by soft elastic that gently aids in the lifting…." March 2009 Press Release. *See also* March 6, 2009 Blog Entry and March 11, 2009 Blog Entry for the same description. A horseshoe has a U-shaped opening. U-Shaped Opening when the Stretch Panel is in a relaxed State ACI000040 at 00:14.

Claim 13	Exemplary Disclosure in Prior Art
	The 9133 Show-It Boxer's opening has a U-shape when the stretch panel is in a relaxed state. ***See,*** "The horseshoe shaped inner cup [Stretch Panel] is lined by soft elastic that gently aids in the lifting…." March 2009 Press Release. *See also* March 6, 2009 Blog Entry and March 11, 2009 Blog Entry for the same description. A horseshoe has a U-shaped opening.

Claim 14	Exemplary Disclosure in Prior Art
[14] A garment according to claim 1 wherein the stretch panel is formed from a single unitary piece of woven fabric.	The obviousness combinations asserted and disclosed in this chart for claim 14 are as follows: • '218 Publication in view of 9132 Show-It Brief/9133 Show-It Boxer • '218 Publication in view of 9132 Show-It Brief/9133 Show-It Boxer in further view of EP O 476 818 See above regarding claim 1. **The '218 Publication discloses a stretch panel formed from a single unitary piece of woven fabric.** ***See,*** In particular, the only material disclosed by the '218 Publication is elastic, ventilating cloth, specifically cotton or spandex-contained mesh cloth (woven fabric). The '218 Publication discloses the stretch panel, as described in 1.3, above, is a single unitary piece of fabric. "[0021] . . . The cover panel is made of a piece of elastic, ventilating cloth (cotton cloth or spandex-contained meshed cloth), having top and bottom ends respectively fixedly fastened to the waistband 13 and the crotch 14." See also [0022], Claim 2, Claim 3.

Either Anticipation by U.S. Patent Publication No. 2004/0025218 (Published Feb. 12, 2004) or Obviousness In View of Andrew Christian Style No. 9132 (Show-It Brief) and 9133 (Show-It Boxer) and EP O 476 818 or the '369 Patent

Claim 14	Exemplary Disclosure in Prior Art
	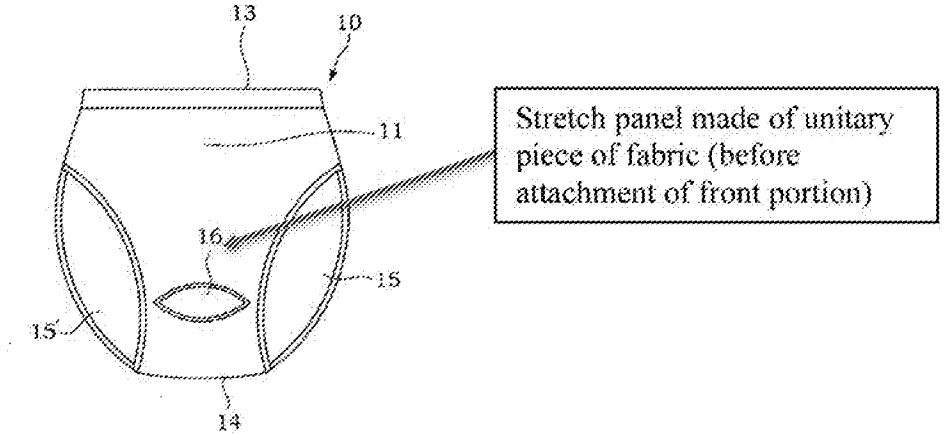 Fig. 1 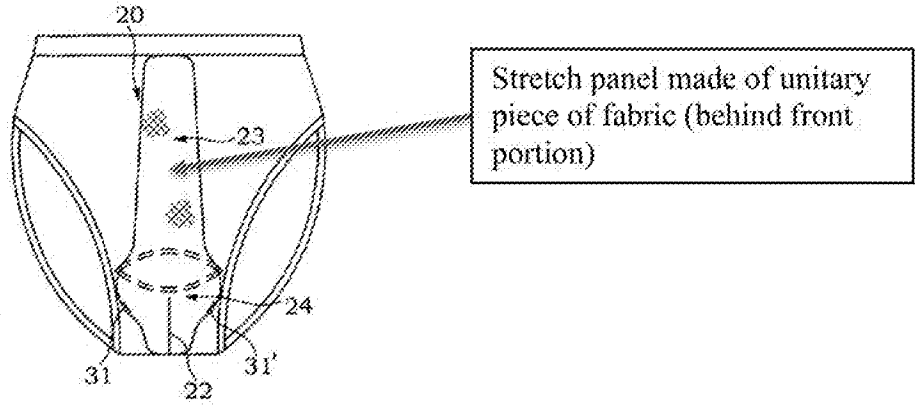 Fig.3

Claim 14	Exemplary Disclosure in Prior Art
	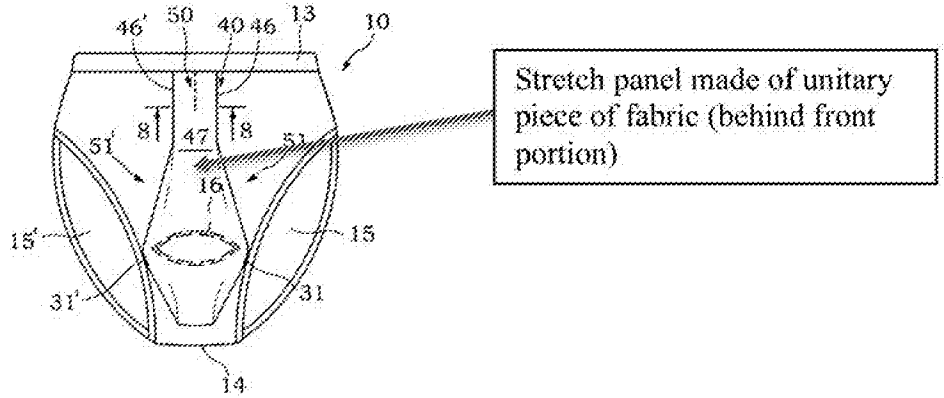 Fig.7 To the extent Plaintiffs contend the '218 Publication does not expressly, implicitly, or inherently disclose a stretch panel formed from a single unitary piece of woven fabric, one of ordinary skill in the art would, based on one's knowledge and the '218 Publication, understand how to modify the disclosure of the '218 Publication to meet this limitation. Alternatively, one of ordinary skill could modify the '218 Publication in view of the 9132 Show-It Brief/9133 Show-It Boxer (disclosure below) to meet this limitation. **The 9132 Show-It Brief's stretch panel is formed from a single unitary piece of woven fabric.** ***See,***

Either Anticipation by U.S. Patent Publication No. 2004/0025218 (Published Feb. 12, 2004) or Obviousness In View of Andrew Christian Style No. 9132 (Show-It Brief) and 9133 (Show-It Boxer) and EP O 476 818 or the '369 Patent

Claim 14	Exemplary Disclosure in Prior Art
	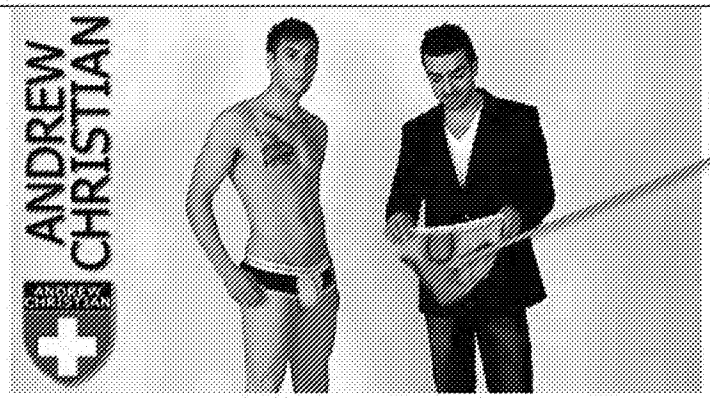 ACI000040 at 00:14. To the extent Plaintiffs contend the 9132 Show-It Brief does not expressly, implicitly, or inherently disclose a stretch panel formed from a single unitary piece of woven fabric, one of ordinary skill in the art would, based on one's knowledge and the 9132 Show-It Brief, understand how to modify the 9132 Show-It Brief to meet this limitation. **The 9133 Show-It Boxer's stretch panel is formed from a single unitary piece of woven fabric.** ***See,*** On information and belief, the 9133 Show-It Boxer utilized the same "Show-It Technology 2.0" utilized in the 9132 Show-It Brief, and an inside view of the 9133 Show-It Boxer would show a "inner cup" (that is, a Stretch Panel) formed from a single unitary piece of woven fabric inside the Front Portion as shown above in ACI000040 at 00:14. *See* Show-It 2009 Line Sheet at ACI000092, depicting both the 9132 Show-It Brief and the 9133 Show-It Boxer and describing "Show-It™ with Show-It Technology 2.0" with "our comfy cup." To the extent Plaintiffs contend the 9133 Show-It Boxer does not expressly, implicitly, or inherently disclose a stretch panel formed from a single unitary piece of woven fabric, one of ordinary skill in the art would, based on one's knowledge and the 9133 Show-It Boxer, understand how to modify the 9133 Show-It Boxer to meet this limitation.

Either Anticipation by U.S. Patent Publication No. 2004/0025218 (Published Feb. 12, 2004) or Obviousness In View of Andrew Christian Style No. 9132 (Show-It Brief) and 9133 (Show-It Boxer) and EP O 476 818 or the '369 Patent

Claim 15	Exemplary Disclosure in Prior Art
[15] A garment according to claim 1 wherein the pouch comprises a dart seam stitched along a bottom portion of the pouch and substantially centrally to provide extra volume in front of and underneath the genitals of a wearer.	The obviousness combinations asserted and disclosed in this chart for claim 15 are as follows: • '218 Publication in view of 9132 Show-It Brief/9133 Show-It Boxer • '218 Publication in view of 9132 Show-It Brief/9133 Show-It Boxer in further view of EP O 476 818 See above regarding claim 1. The Court has construed "a dart seam stitched along a bottom portion of the pouch" as "a shaping seam stitched along a bottom portion of the pouch." **The '218 Publication discloses a pouch with a shaping seam stitched along a bottom portion of the pouch and substantially centrally to provide extra volume in front of and underneath the genitals of a wearer.** ***See,*** In particular, the '218 Publication discloses a bottom center pleat (shaping seam stitched along a bottom portion of the pouch and substantially centrally), which provides extra volume in front of and underneath the genitals of the wearer. "[0022] FIGS. 2-5 show the first embodiment of the present invention. As illustrated, the cover panel 20 is an elongated piece of cloth, having a bottom center pleat 22 longitudinally upwardly extended from the bottom end thereof and two smoothly arched side flaps 21 and 21' symmetrically formed integral with two opposite lateral sides thereof near the bottom end. When fastened to the undergarment body 10, the upper part of the cover panel 20 defines with the undergarment body 10 a penis receiving space 23 above the opening 16 (see also FIG. 1) for receiving the user's penis, and the side flaps 21 and 21' define with the undergarment body 10a scrotum receiving space 24 below the opening 16 for receiving the user's scrotum. Further, because of the effect of the bottom center pleat 22 [the shaping seam stitched along a bottom portion of the pouch], the lower part of the cover panel 20 protrudes forwards from the undergarment body 10, forming a three-dimensional status. Further, the border areas of the side flaps 21 and 21' are respectively stitched to the undergarment body 10, forming stitched lines 31 and 31' that hold the cover panel 20 in the center position against biasing."

Either Anticipation by U.S. Patent Publication No. 2004/0025218 (Published Feb. 12, 2004) or Obviousness In View of Andrew Christian Style No. 9132 (Show-It Brief) and 9133 (Show-It Boxer) and EP O 476 818 or the '369 Patent

Claim 15	Exemplary Disclosure in Prior Art
	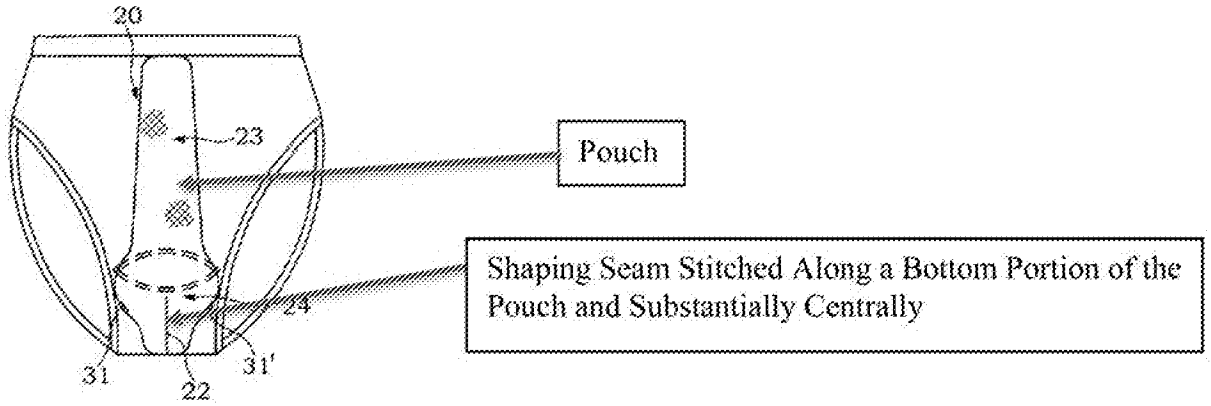 Fig.3 **Furthermore, the 9132 Show-It Brief includes a pouch with a shaping seam stitched along a bottom portion of the pouch and substantially centrally to provide extra volume in front of and underneath the genitals of a wearer.** ***See,*** The dart seam is the seam down the middle of the front portion (the front layer of the pouch) in the 9132 Show-It Briefs.

Either Anticipation by U.S. Patent Publication No. 2004/0025218 (Published Feb. 12, 2004) or Obviousness In View of Andrew Christian Style No. 9132 (Show-It Brief) and 9133 (Show-It Boxer) and EP O 476 818 or the '369 Patent

Claim 15	Exemplary Disclosure in Prior Art
	Show-It 2009 Line Sheet at ACI000091. ACI000040 at 00:10. 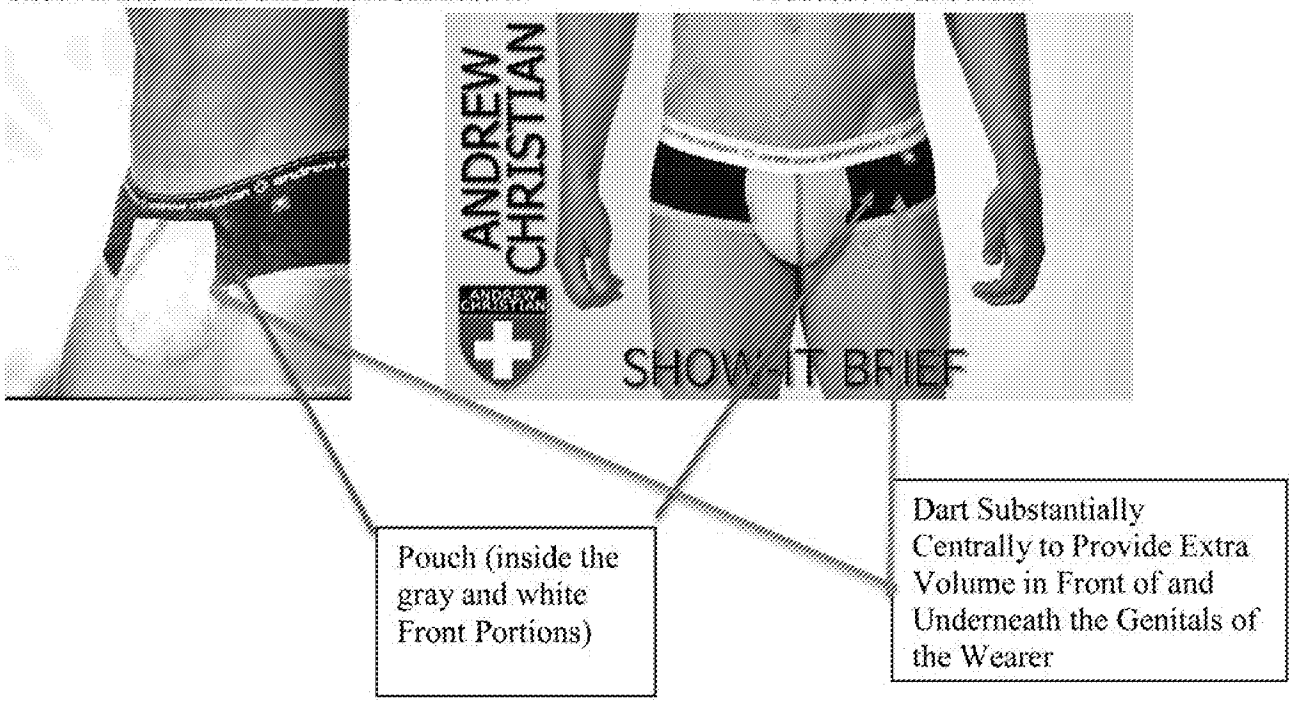 To the extent Plaintiffs contend the 9132 Show-It Brief does not expressly, implicitly, or inherently disclose a pouch with a dart seam stitched along a bottom portion of the pouch and substantially centrally to provide extra volume in front of and underneath the genitals of a wearer, one of ordinary skill in the art would, based on one's knowledge and the 9132 Show-It Brief, understand how to modify the 9132 Show-It Brief to meet this limitation. **The 9133 Show-It Boxer includes a pouch with a shaping seam stitched along a bottom portion of the pouch and substantially centrally to provide extra volume in front of and underneath the genitals of a wearer.** ***See,***

Either Anticipation by U.S. Patent Publication No. 2004/0025218 (Published Feb. 12, 2004) or Obviousness In View of Andrew Christian Style No. 9132 (Show-It Brief) and 9133 (Show-It Boxer) and EP O 476 818 or the '369 Patent

Claim 15	Exemplary Disclosure in Prior Art
	The dart seam is the seam down the middle of the front portion (the front layer of the pouch) in the 9133 Show-It Boxers. 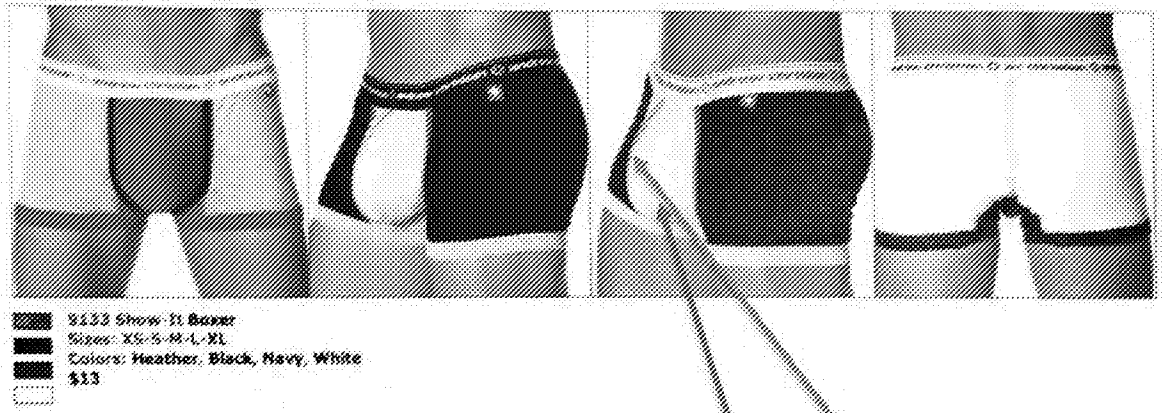 Show-It 2009 Line Sheet at ACI000092. 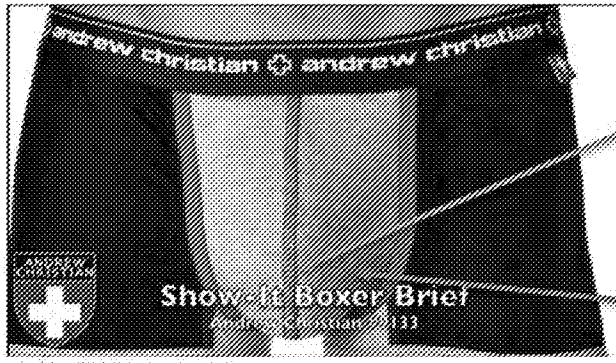 ACI000038 at 2:43. Dart Substantially Centrally to Provide Extra Volume in Front of and Underneath the Genitals of the Wearer Pouch (inside the gray and white Front Portions) To the extent Plaintiffs contend the 9133 Show-It Boxer does not expressly, implicitly, or inherently disclose a pouch with a dart seam stitched along a bottom portion of the pouch and substantially centrally to provide extra volume in

Either Anticipation by U.S. Patent Publication No. 2004/0025218 (Published Feb. 12, 2004) or Obviousness In View of Andrew Christian Style No. 9132 (Show-It Brief) and 9133 (Show-It Boxer) and EP O 476 818 or the '369 Patent

Claim 15	Exemplary Disclosure in Prior Art
	front of and underneath the genitals of a wearer, one of ordinary skill in the art would, based on one's knowledge and the 9133 Show-It Boxer, understand how to modify the 9133 Show-It Boxer to meet this limitation.

Exhibit 11

Either Anticipation by U.S. Patent Publication No. 2004/0025218 (Published Feb. 12, 2004) or Obviousness In View of Andrew Christian Printed Publications and EP O 476 818 or the '369 Patent

The disclosure of U.S. Patent Publication No. 2004/0025218 (published Feb. 12, 2004) ("'218 Publication") either expressly, implicitly, or inherently anticipates the asserted claims of U.S. Patent No. 10,034,496 under 35 U.S.C. § 102 and/or renders those claims obvious under 35 U.S.C. § 103 in view of the printed publications disclosing Andrew Christian Products ("Andrew Christian printed publications") (*see* Exhibit I-1 and I-2) in Style No. 9132 (Show-It Brief) ("9132 Show-It Brief") and Style No. 9133 (Show-It Boxer) ("9133 Show-It Boxer"), and/or European Patent Application No. EP 0 476 818 A1 (Published March 25, 1992) ("EP O 476 818"), and/or U.S. Patent No. 7,631,369 (issued Dec. 15, 2009) (the "'369 Patent"), as set forth in the chart below.

The Andrew Christian printed publications are: ACI000091-ACI000092 ("Show-It 2009 Line Sheet"); AC000093-AC000101 ("Show-It 2009-2010 Catalog"); ACI000038 (the "ACI000038 publication" or "ACI000038"); ACI000040 (the "ACI000040 publication" or "ACI000040"). One of ordinary skill in the art of the Asserted Patents would understand to combine these four printed publications, as all four discuss and describe the same Andrew Christian products, the 9132 Show-It Brief and the 9133 Show-It Boxer. The '218 Publication also discloses a "men's undergarment" and the '369 Patent discloses "performance underwear" for men.

The obviousness combinations asserted and disclosed in this chart are as follows:

- '218 Publication in view of Andrew Christian printed publications (all asserted claims)
- '218 Publication in view of Andrew Christian printed publications in further view of EP O 476 818 (all asserted claims)
- '218 Publication in view of Andrew Christian printed publications in further view of the '369 Patent (claim 2)

Claim 1	Exemplary Disclosure in Prior Art
[1.pre] 1. A male garment comprising:	**The '218 Publication discloses a male garment.** ***See,*** "A men's undergarment" (Abstract) "MEN'S UNDERGARMENT" (Title)

Either Anticipation by U.S. Patent Publication No. 2004/0025218 (Published Feb. 12, 2004) or Obviousness In View of Andrew Christian Printed Publications and EP O 476 818 or the '369 Patent

Claim 1	Exemplary Disclosure in Prior Art
	"[0002] The present invention provides an undergarment for men and, more particularly, to such a men's undergarment that is good for the health of the user's genitals." 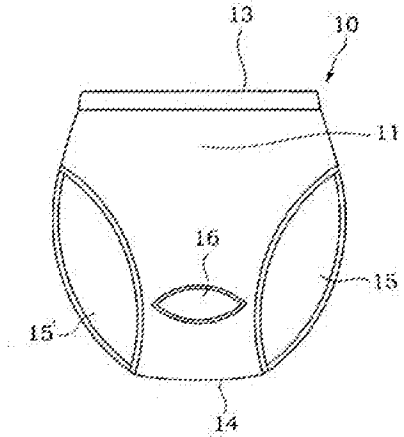 Fig.1 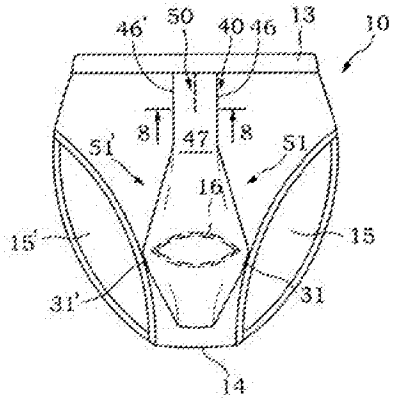 Fig.7

Either Anticipation by U.S. Patent Publication No. 2004/0025218 (Published Feb. 12, 2004) or Obviousness In View of Andrew Christian Printed Publications and EP O 476 818 or the '369 Patent

Claim 1	Exemplary Disclosure in Prior Art
	Furthermore, the 9132 Show-It Brief is a male garment. *See,* 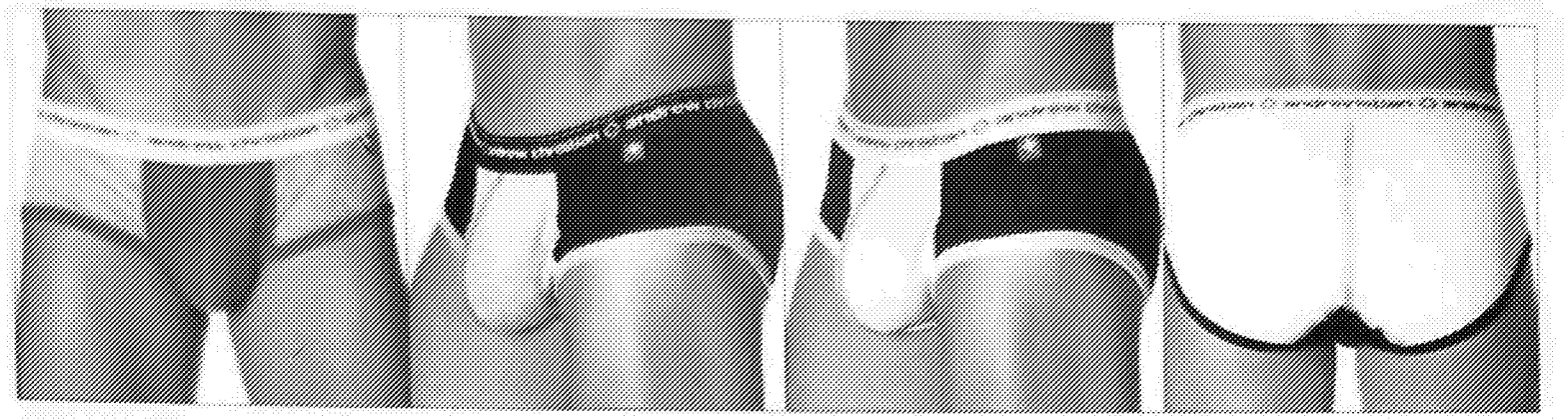 Show-It 2009 Line Sheet at ACI000092. Show-It 2009 Line Sheet at ACI000091. ACI000040 at 00:10.

Claim 1	Exemplary Disclosure in Prior Art
	The 9133 Show-It Boxer is a male garment. *See,* 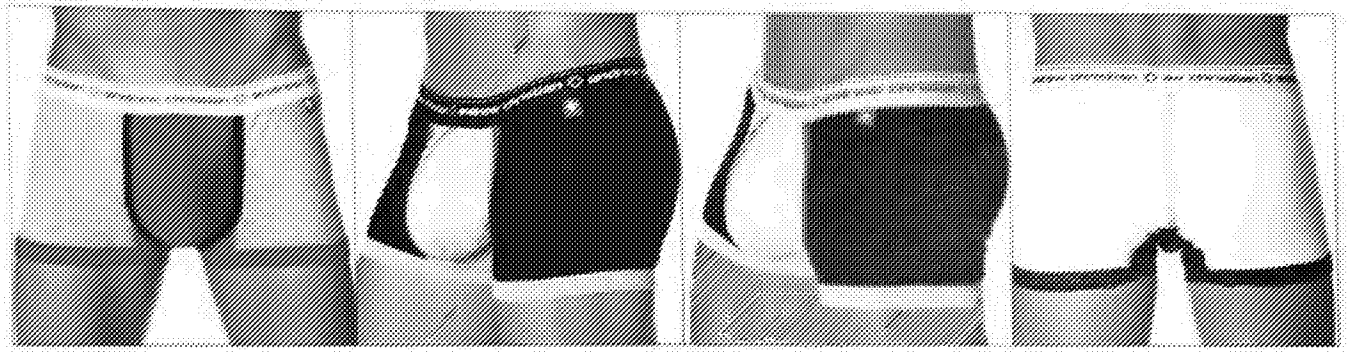 9133 Show-It Boxer Sizes: XS-S-M-L-XL Colors: Heather, Black, Navy, White $13 Show-It 2009 Line Sheet at ACI000092. 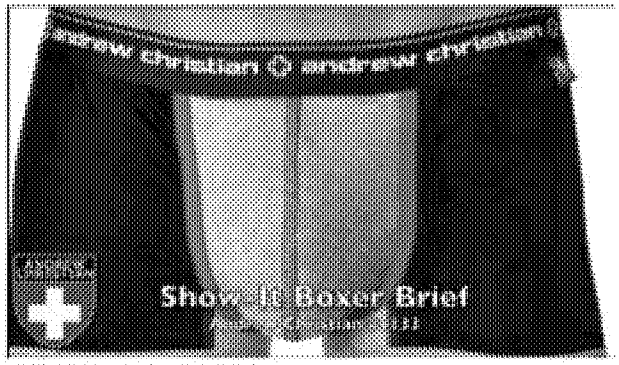 ACI000038 at 2:43.

Either Anticipation by U.S. Patent Publication No. 2004/0025218 (Published Feb. 12, 2004) or Obviousness In View of Andrew Christian Printed Publications and EP O 476 818 or the '369 Patent

Claim 1	Exemplary Disclosure in Prior Art
[1.1a] a body including a front portion and having leg openings for a wearer's legs,	**The '218 Publication discloses a body including a front portion and having leg openings for a wearer's legs.** ***See,*** In particular, the '218 Publication discloses a male garment with an undergarment body including a cover panel ("20" in the first embodiment and "40" in the second embodiment) (the front portion) and having leg holes ("15" and "15'") (the leg openings for a wearer's legs). "A men's undergarment having an opening in the front panel of the undergarment body thereof and a cover panel fastened to the undergarment body" (Abstract") "[0009] . . . The under undergarment body comprises a front panel, a back panel, a waistband, and a crotch, and two leg holes." "[0021] Referring to FIG. 1, a men's undergarment in accordance with the present invention is shown comprised of an undergarment body 10 and a cover panel. The undergarment body 10 comprises a front panel 11, a back panel 12 (see FIG. 5), a waistband 13, and a crotch 14, defining two leg holes 15 and 15'." 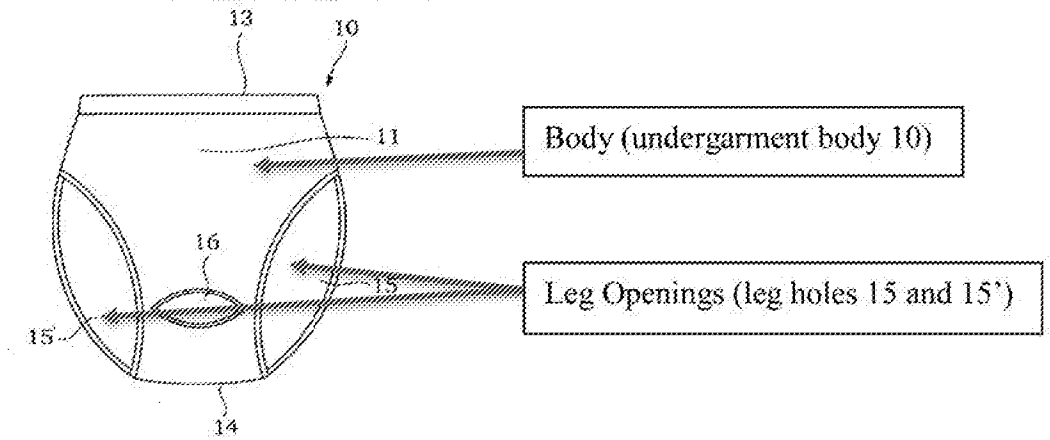 Fig. 1

Either Anticipation by U.S. Patent Publication No. 2004/0025218 (Published Feb. 12, 2004) or Obviousness In View of Andrew Christian Printed Publications and EP O 476 818 or the '369 Patent

Claim 1	Exemplary Disclosure in Prior Art
	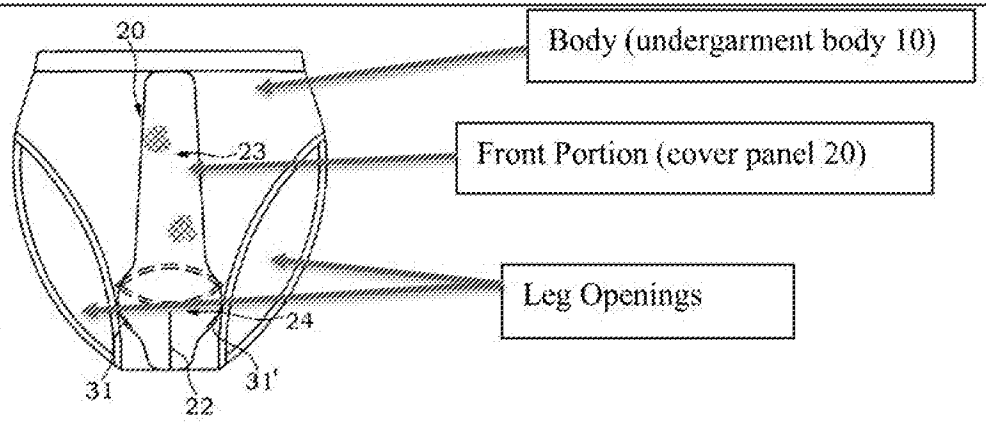 Fig.3 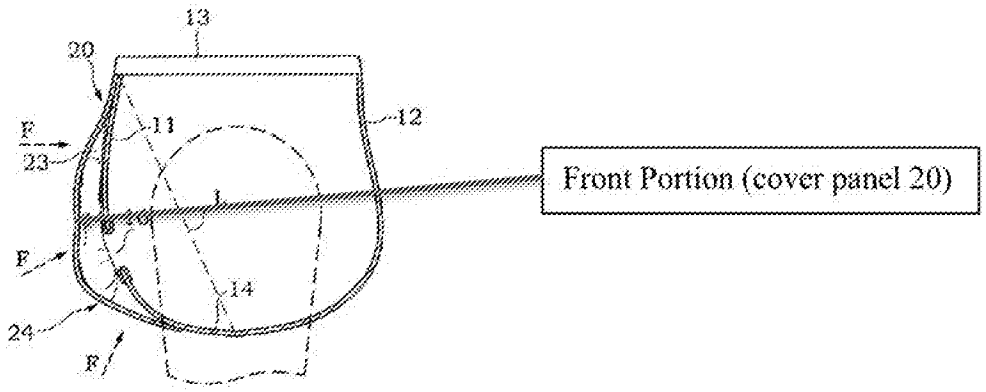 Fig.5

Either Anticipation by U.S. Patent Publication No. 2004/0025218 (Published Feb. 12, 2004) or Obviousness In View of Andrew Christian Printed Publications and EP O 476 818 or the '369 Patent

Claim 1	Exemplary Disclosure in Prior Art
	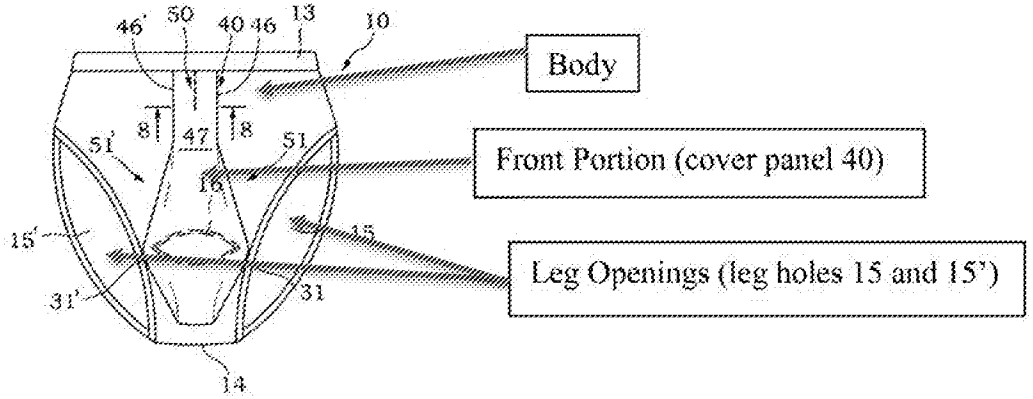 Fig.7 **Furthermore, the 9132 Show-It Brief includes a body including a front portion and having leg openings for a wearer's legs.** ***See,*** The Show-It 2009 Line Sheet discloses the 9132 Show-It Brief including a "front portion," the central part of the body situated in front of the wearer of the 9132 Show-It Brief, shown in red fabric in the image below (and labeled "Front Portion" with an arrow).

Claim 1	Exemplary Disclosure in Prior Art
	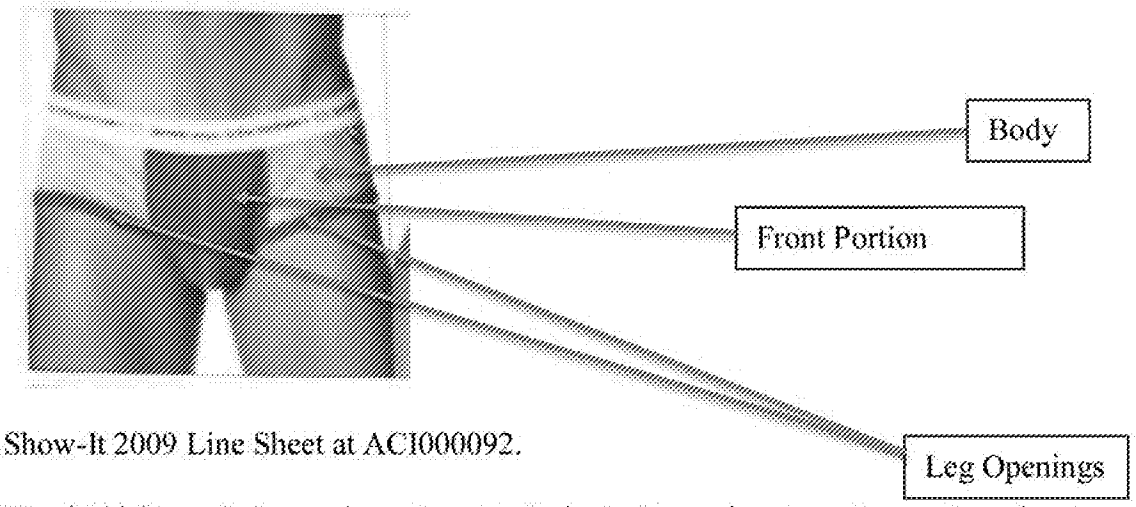 Show-It 2009 Line Sheet at ACI000092. **The 9133 Show-It Boxer includes a body including a front portion and having leg openings for a wearer's legs.** ***See,*** The Show-It 2009 Line Sheet discloses the 9133 Show-It Boxer including a "front portion," the central part of the body situated in front of the wearer of the 9133 Show-It Boxer, shown in red fabric in the image below (and labeled "Front Portion" with an arrow). 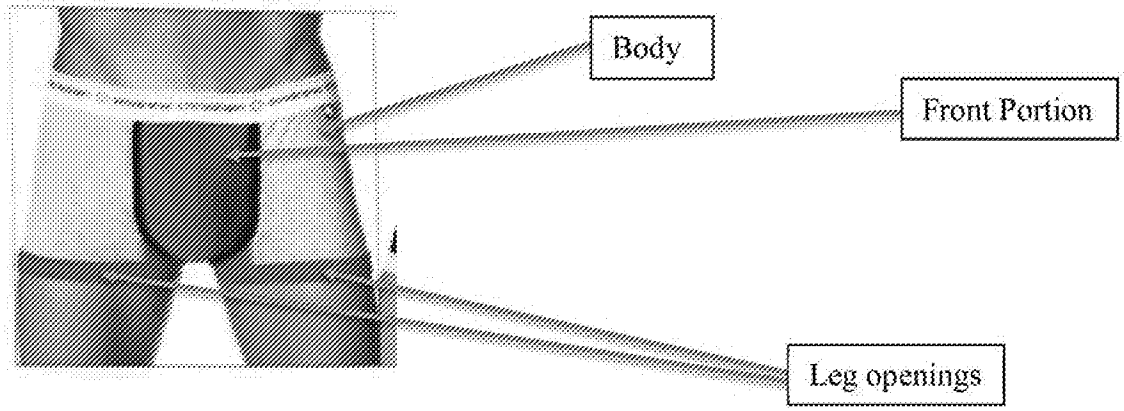 Show-It 2009 Line Sheet at ACI000092.

Claim 1	Exemplary Disclosure in Prior Art
	To the extent Plaintiffs contend the '218 Publication does not expressly, implicitly, or inherently disclose a body including a front portion, one of ordinary skill in the art would, based on one's knowledge and the '218 Publication, understand how to modify the disclosure of the '218 Publication to meet this limitation. Alternatively, one of ordinary skill could modify the '218 Publication in view of the Show-It 2009 Line Sheet (disclosure above) to meet this limitation.
[1.1b] the body including a crotch panel extending between the leg openings and joined to the front portion along a first seam;	**The '218 Publication discloses a body including a crotch panel extending between the leg openings and joined to the front portion along a first seam.** ***See,*** In particular, the '218 Publication discloses a crotch ("14") (the crotch panel) extending between the leg holes (the leg openings) and joined to the front portion at a seam (the first seam). The first seam is the seam where the bottom edge of the cover panel (the front portion) is fixedly fastened to the crotch: "A men's undergarment having an opening in the front panel of the undergarment body thereof and a cover panel fastened to the undergarment body, the cover panel having top and bottom ends respectively fixedly fastened to waistband and crotch of the undergarment body" (Abstract) "[0015] FIG. 6 is an extended out view of the cover panel for the men's undergarment according to the second embodiment of the present invention." See also Figure 6. "[0021] Referring to FIG. 1, a men's undergarment in accordance with the present invention is shown comprised of an undergarment body 10 and a cover panel. The undergarment body 10 comprises a front panel 11, a back panel 12 (see FIG. 5), a waistband 13, and a crotch 14, defining two leg holes 15 and 15'." "[0022] FIGS. 2-5 show the first embodiment of the present invention. As illustrated, the cover panel 20 is an elongated piece of cloth, having a bottom center pleat 22 longitudinally upwardly extended from the bottom end thereof and two smoothly arched side flaps 21 and 21' symmetrically formed integral with two opposite lateral sides thereof near the bottom end. When fastened to the undergarment body 10, the upper part of the cover panel 20 defines with the undergarment body 10 a penis receiving space 23 above the opening 16 (see also FIG. 1) for receiving the user's penis, and the side flaps 21 and 21' define with the undergarment body 10 a scrotum receiving

Claim 1	Exemplary Disclosure in Prior Art
	space 24 below the opening 16 for receiving the user's scrotum. . . . Further, the border areas of the side flaps 21 and 21' are respectively stitched to the undergarment body 10, forming stitched lines 31 and 31' that hold the cover panel 20 in the center position against biasing." 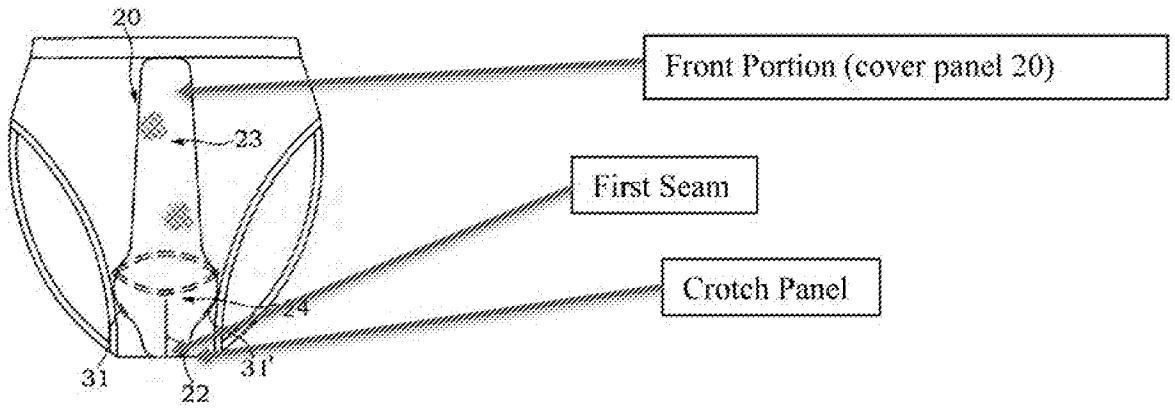 Fig.3 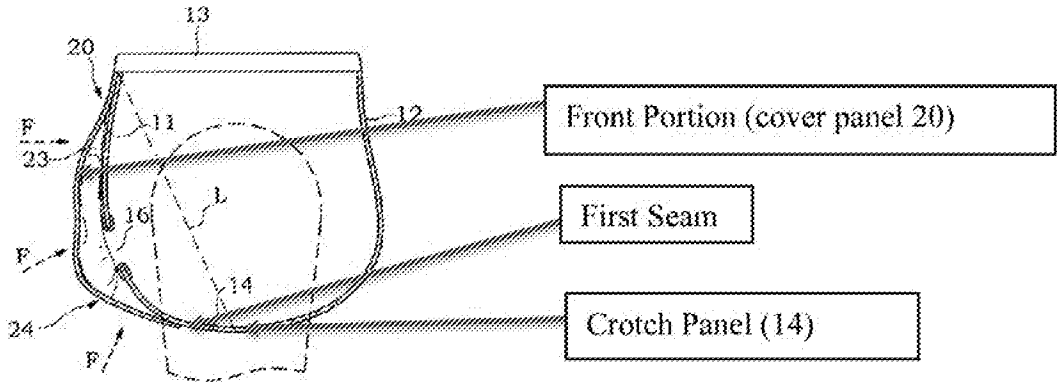 Fig.5

Either Anticipation by U.S. Patent Publication No. 2004/0025218 (Published Feb. 12, 2004) or Obviousness In View of Andrew Christian Printed Publications and EP O 476 818 or the '369 Patent

Claim 1	Exemplary Disclosure in Prior Art
	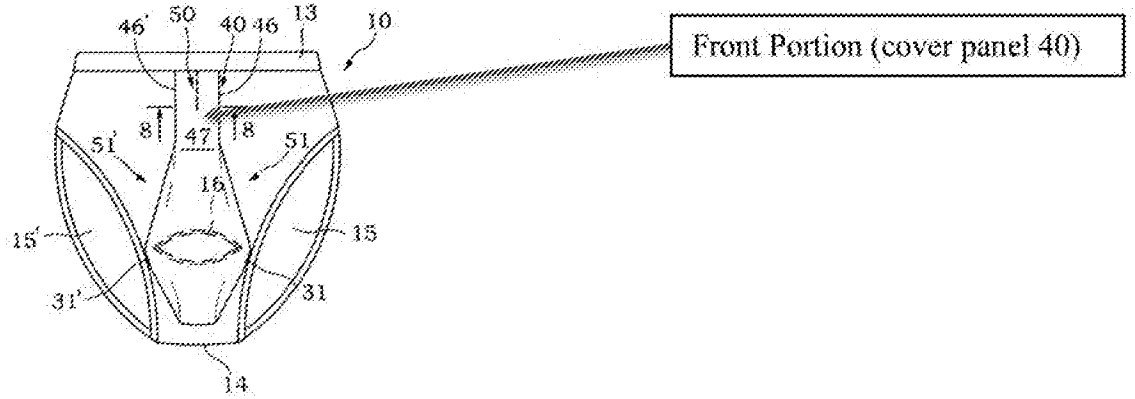 Fig.7 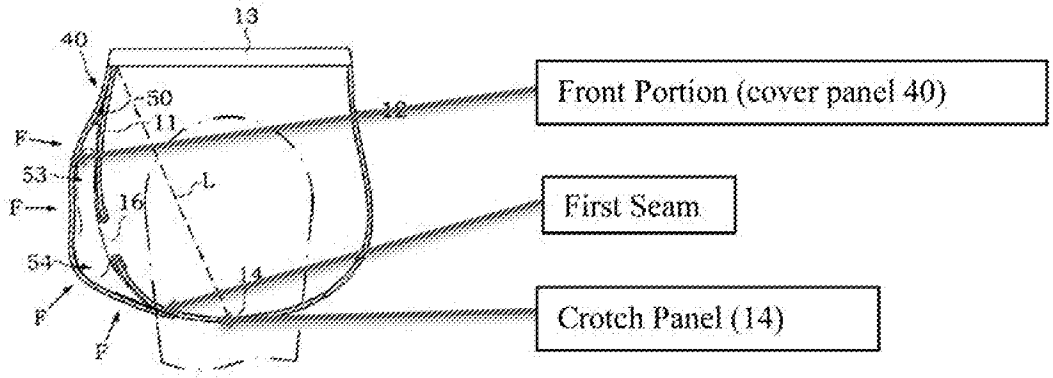 Fig.11

Claim 1	Exemplary Disclosure in Prior Art
	Furthermore, the 9132 Show-It Brief includes a body including a crotch panel extending between the leg openings and joined to the front portion along a first seam. ***See,*** The ACI000038 publication shows a "crotch panel" of the 9132 Show-It Brief as the blue fabric panel extending between the legs as shown in the image below, as indicated by the accompanying arrows: 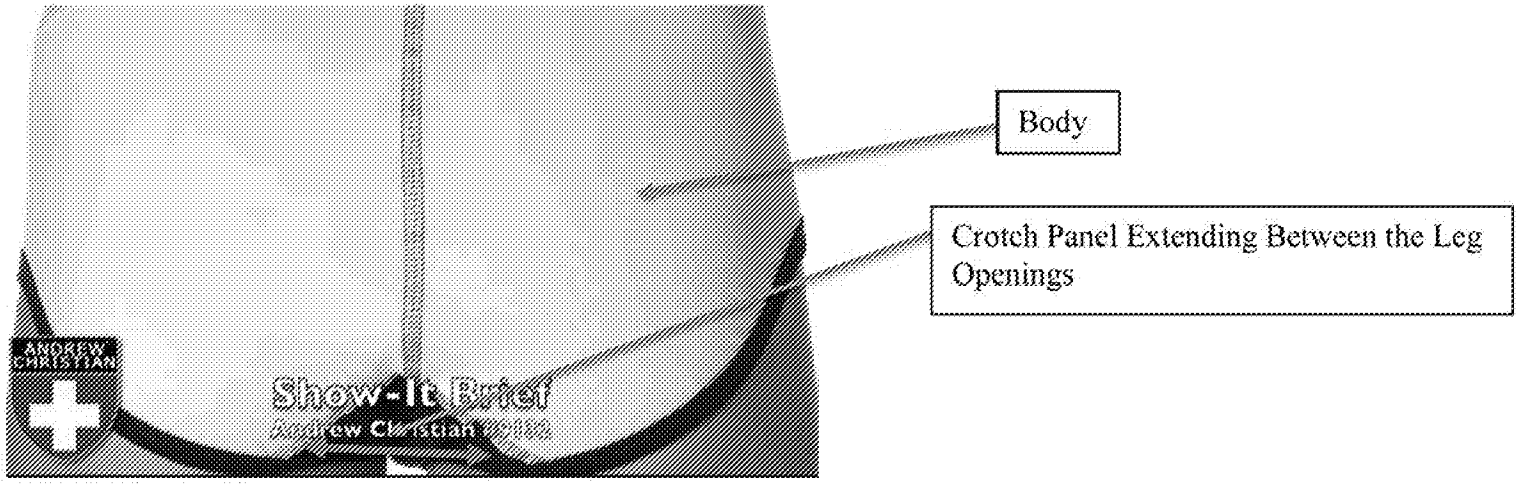 ACI000038 at 4:17. The ACI000040 publication shows a "crotch panel," in red in the screenshots below, that is attached to the "front portion" of the 9132 Show-It Brief (also in red below) along a first seam. As shown in the screenshots below, in the 9132 Show-It Brief, the "first seam" also attaches the "crotch panel" to the "stretch panel" (also in red).

Either Anticipation by U.S. Patent Publication No. 2004/0025218 (Published Feb. 12, 2004) or Obviousness In View of Andrew Christian Printed Publications and EP O 476 818 or the '369 Patent

Claim 1	Exemplary Disclosure in Prior Art
	 ACI000040 at 00:28. ACI000040 at 00:33.

Claim 1	Exemplary Disclosure in Prior Art
	The 9133 Show-It Boxer includes a body including a crotch panel extending between the leg openings and joined to the front portion along a first seam. ***See,*** The ACI000038 publication shows a "crotch panel" of the 9133 Show-It Boxer as the gray fabric panel extending between the legs seam as shown in the screenshots below, as indicated by the accompanying arrows. The crotch panel is joined to the front portion along a first seam, which is obstructed from view by the pouch in the image below: 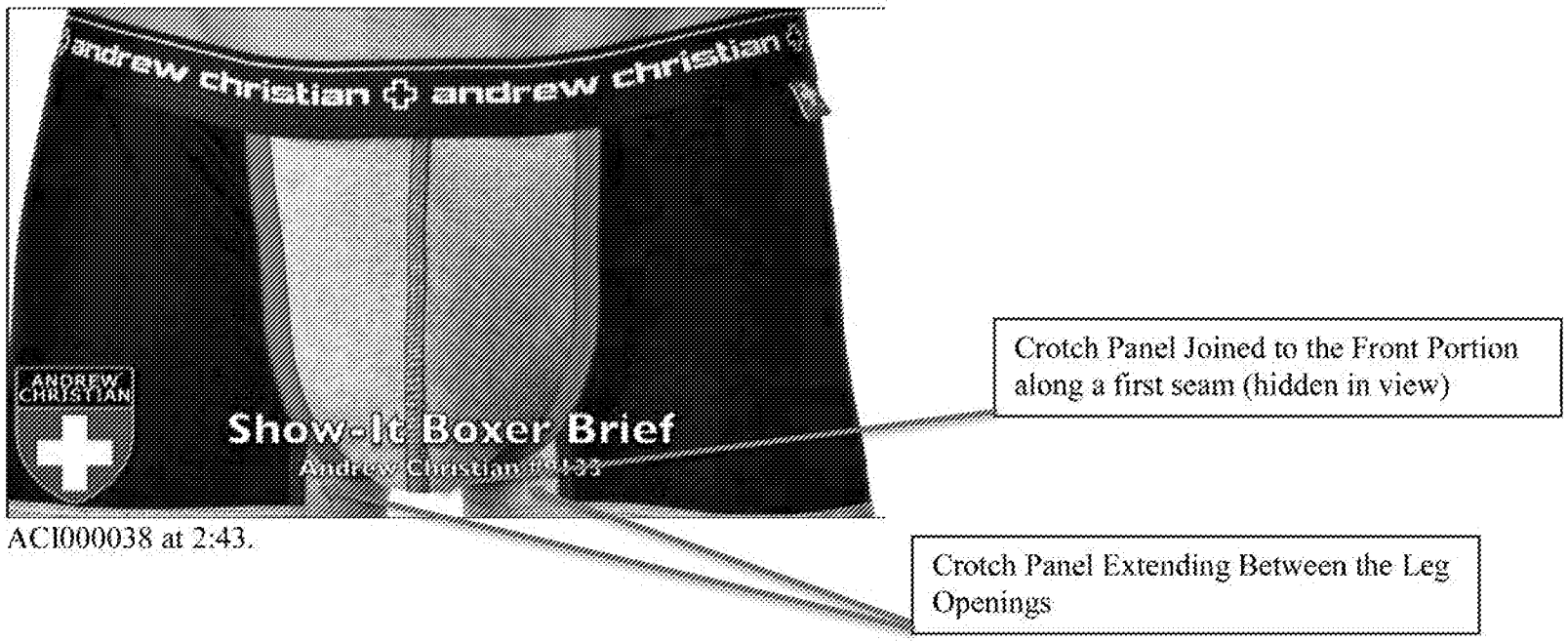 ACI000038 at 2:43.

Claim 1	Exemplary Disclosure in Prior Art
	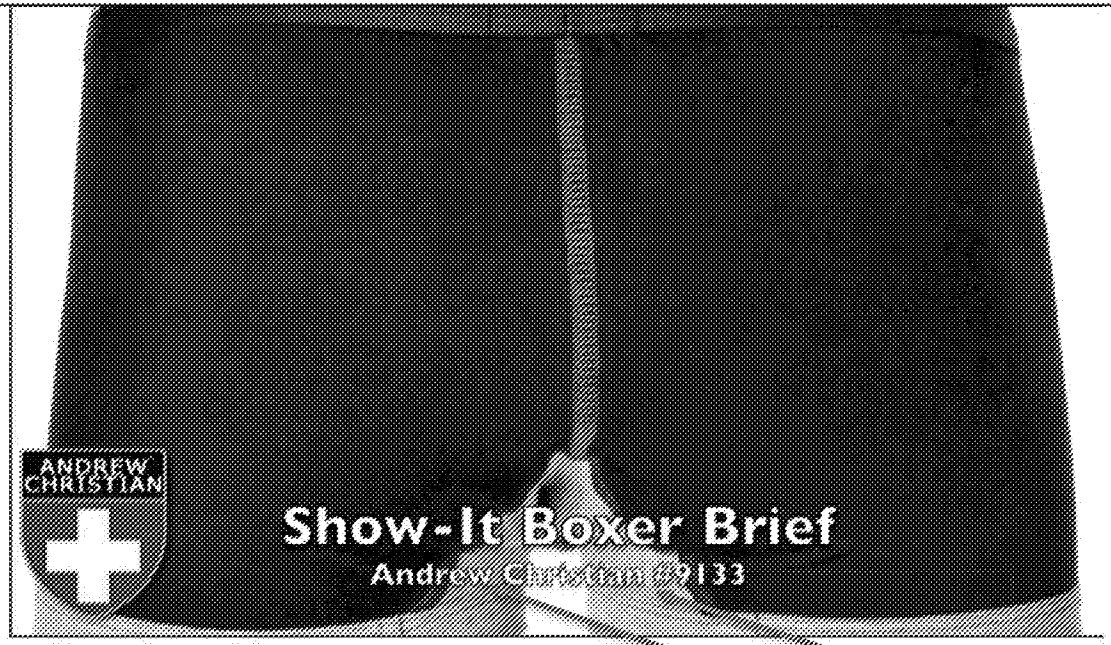 ACI000038 at 2:48. Crotch Panel Extending Between the Leg Openings
[1.2] a waistband attached by a waistband seam at an upper edge of the body;	**The '218 Publication discloses a waistband attached by a waistband seam at an upper edge of the body.** ***See,*** In particular, the '218 Publication discloses a waistband ("13") attached by a seam (a waistband seam) at an upper edge of the undergarment body (the body). "[T]he cover panel having top and bottom ends . . . fixedly fastened to waistband" (Abstract) "[0021] . . . The cover panel is made of a piece of elastic, ventilating cloth (cotton cloth or spandex-contained meshed cloth), having top and bottom ends respectively fixedly fastened to the waistband 13 and the crotch 14."

Either Anticipation by U.S. Patent Publication No. 2004/0025218 (Published Feb. 12, 2004) or Obviousness In View of Andrew Christian Printed Publications and EP O 476 818 or the '369 Patent

Claim 1	Exemplary Disclosure in Prior Art
	"[0023] . . . The top and bottom ends of the well-folded cover panel 40 are then respectively stitched to the waistband 13 and crotch 14 of the undergarment body 10." 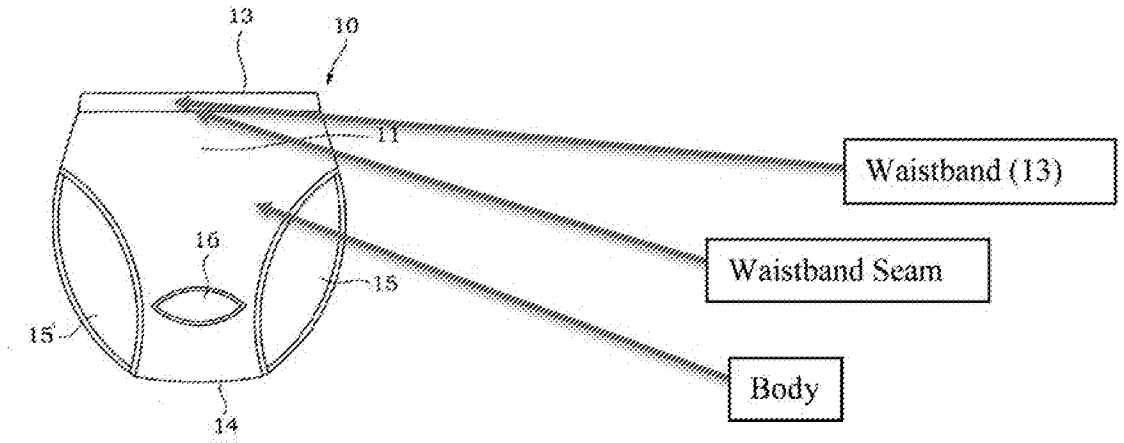 Fig. 1

Either Anticipation by U.S. Patent Publication No. 2004/0025218 (Published Feb. 12, 2004) or Obviousness In View of Andrew Christian Printed Publications and EP O 476 818 or the '369 Patent

Claim 1	Exemplary Disclosure in Prior Art
	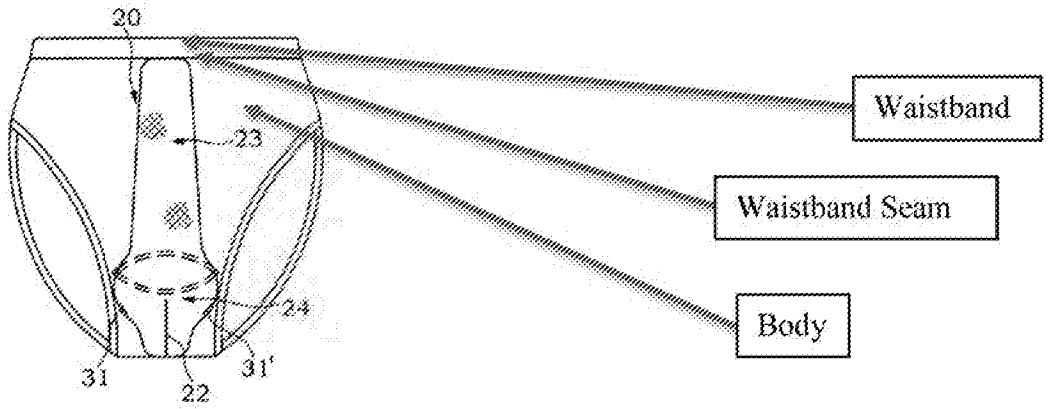 Fig.3 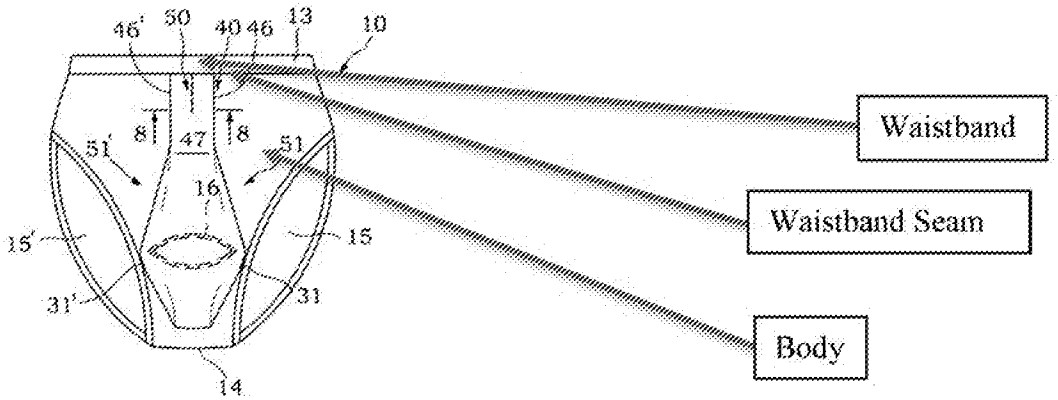 Fig.7

Claim 1	Exemplary Disclosure in Prior Art
	Furthermore, the 9132 Show-It Brief includes a waistband attached by a waistband seam at an upper edge of the body. ***See,*** The Show-It 2009 Line Sheet depicts a "waistband" of the 9132 Show-It Brief (with "Andrew Christian" printed on it) that is attached by a seam (the "waistband seam") at the upper edge of the "body." In the leftmost image of the 9132 Show-It Brief shown below, the body is heather (gray) and red and the waistband is white with "Andrew Christian" printed in red. 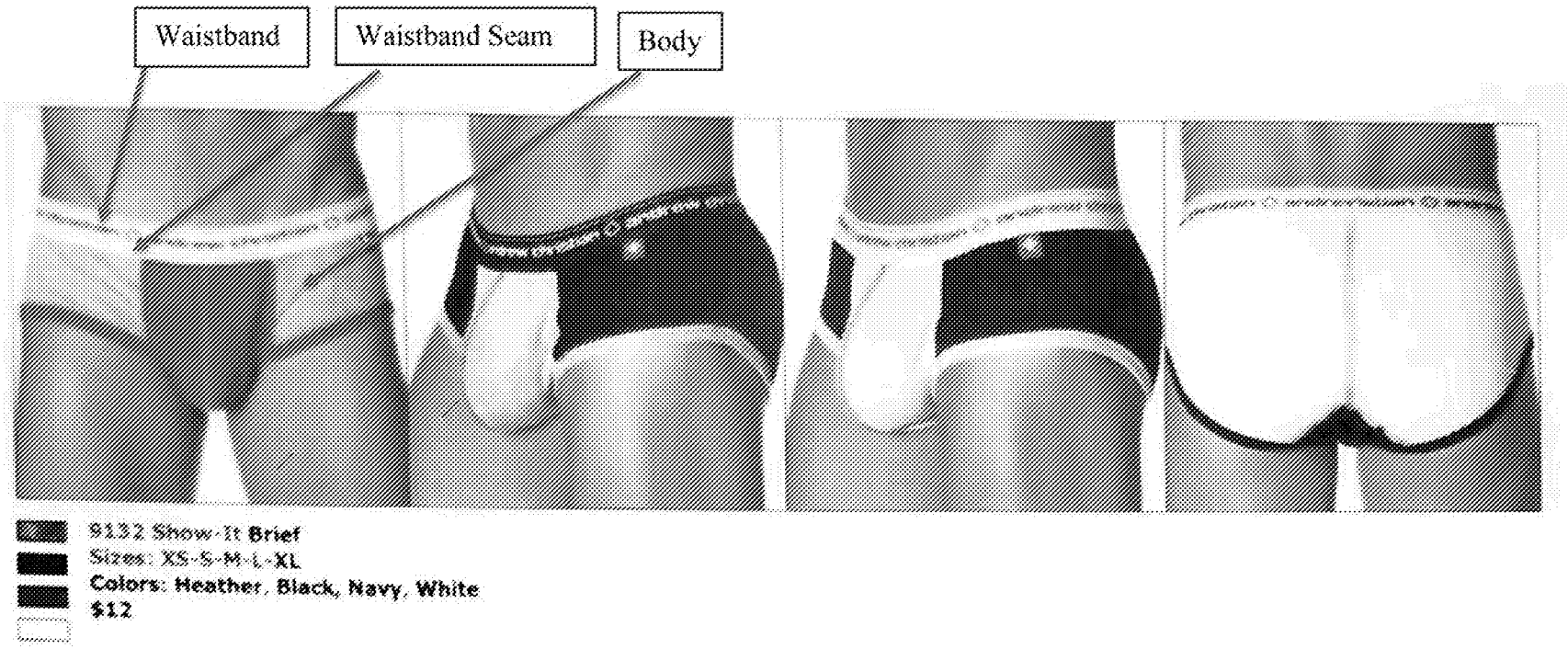 Show-It 2009 Line Sheet at ACI000092.

Claim 1	Exemplary Disclosure in Prior Art
	The 9133 Show-It Boxer includes a waistband attached by a waistband seam at an upper edge of the body. ***See,*** The Show-It 2009 Line Sheet depicts a "waistband" of the 9133 Show-It Boxer (with "Andrew Christian" printed on it) that is attached by a seam (the "waistband seam") at the upper edge of the "body." In the leftmost image of the 9133 Show-It Boxer shown below, the body is heather (gray) and red and the waistband is white with "Andrew Christian" printed in red. 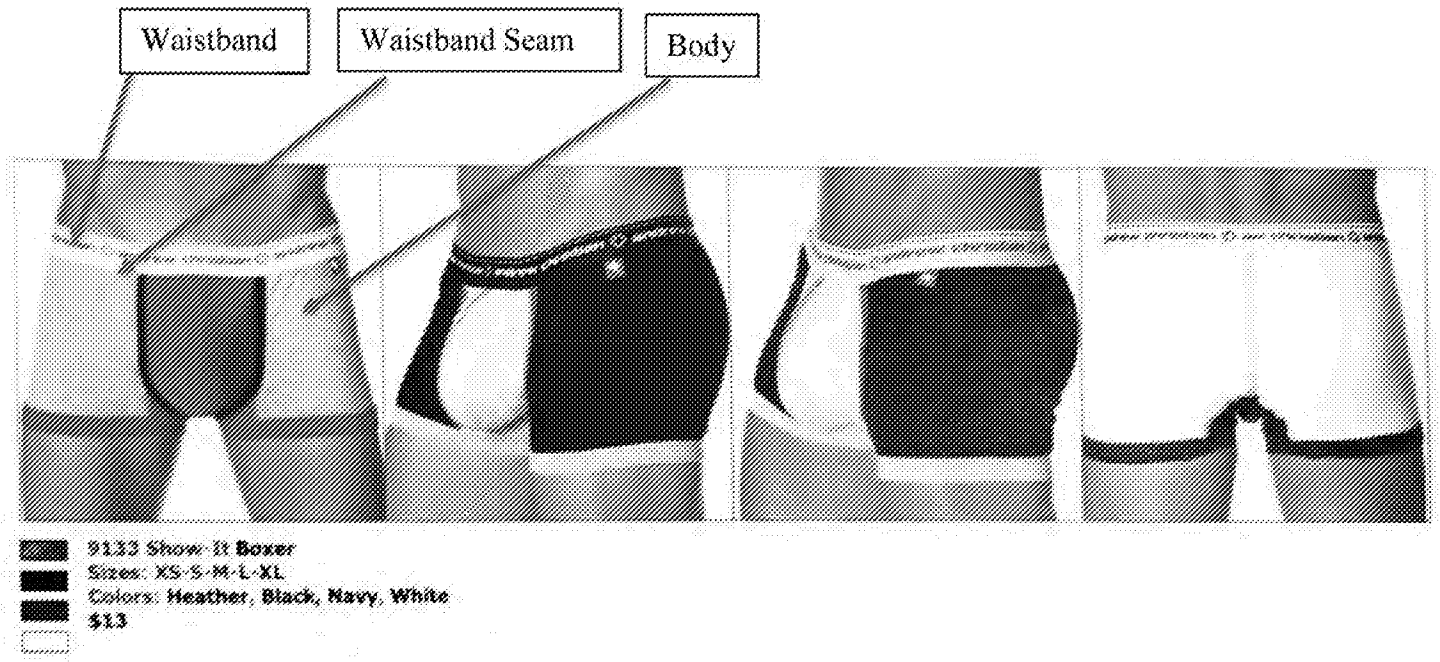 Show-It 2009 Line Sheet at ACI000092.
[1.3a] a stretch panel attached to the body	**The '218 Publication discloses a stretch panel attached to the body inside the front portion.** ***See,*** In particular, the '218 Publication discloses that the cover panel (the front portion) attaches to the undergarment body, above at the waistband seam (top location), below at a seam at the crotch (bottom location), and seams on the sides via side flaps (side seams),

Claim 1	Exemplary Disclosure in Prior Art
inside the front portion,	which collectively define a space of the undergarment body with an opening for the wearer's penis and scrotum (stretch panel) inside of the front portion. "[0009] The cover panel has top and bottom ends respectively fixedly fastened to the waistband and the crotch . . . ." "[0021] . . . The cover panel is made of a piece of elastic, ventilating cloth (cotton cloth or spandex-contained meshed cloth), having top and bottom ends respectively fixedly fastened to the waistband 13 and the crotch 14." "[0022] FIGS. 2-5 show the first embodiment of the present invention. As illustrated, the cover panel 20 is an elongated piece of cloth, having a bottom center pleat 22 longitudinally upwardly extended from the bottom end thereof and two smoothly arched side flaps 21 and 21' symmetrically formed integral with two opposite lateral sides thereof near the bottom end. When fastened to the undergarment body 10, the upper part of the cover panel 20 defines with the undergarment body 10 a penis receiving space 23 above the opening 16 (see also FIG. 1) for receiving the user's penis, and the side flaps 21 and 21' define with the undergarment body 10a scrotum receiving space 24 below the opening 16 for receiving the user's scrotum. Further, because of the effect of the bottom center pleat 22, the lower part of the cover panel 20 protrudes forwards from the undergarment body 10, forming a three-dimensional status. Further, the border areas of the side flaps 21 and 21' are respectively stitched to the undergarment body 10, forming stitched lines 31 and 31' that hold the cover panel 20 in the center position against biasing." 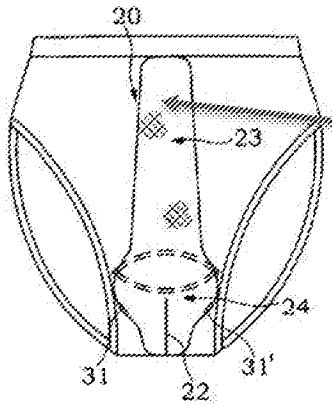 Fig.3 Front Portion (Stretch Panel is behind the Front Portion (cover panel 20), with the top edge defined by the waistband seam (top location), the bottom edge defined by the first seam (the bottom location), and the side edges defined by the side flaps 20 and 20')

Either Anticipation by U.S. Patent Publication No. 2004/0025218 (Published Feb. 12, 2004) or Obviousness In View of Andrew Christian Printed Publications and EP O 476 818 or the '369 Patent

Claim 1	Exemplary Disclosure in Prior Art
	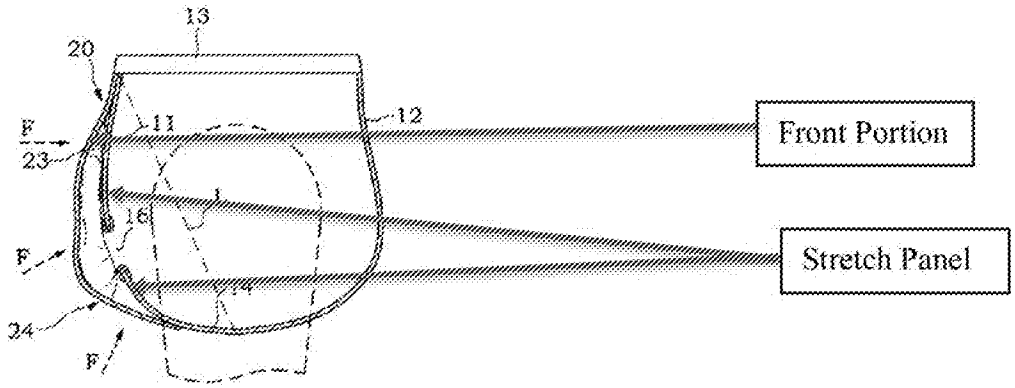 Fig.5

Either Anticipation by U.S. Patent Publication No. 2004/0025218 (Published Feb. 12, 2004) or Obviousness In View of Andrew Christian Printed Publications and EP O 476 818 or the '369 Patent

Claim 1	Exemplary Disclosure in Prior Art
	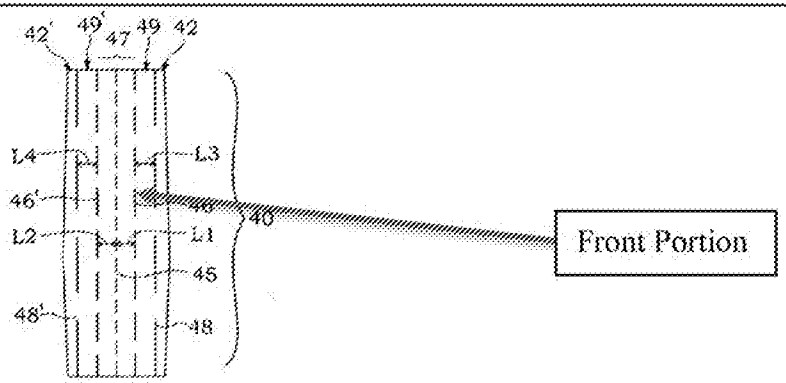 Fig.6

Either Anticipation by U.S. Patent Publication No. 2004/0025218 (Published Feb. 12, 2004) or Obviousness In View of Andrew Christian Printed Publications and EP O 476 818 or the '369 Patent

Claim 1	Exemplary Disclosure in Prior Art
	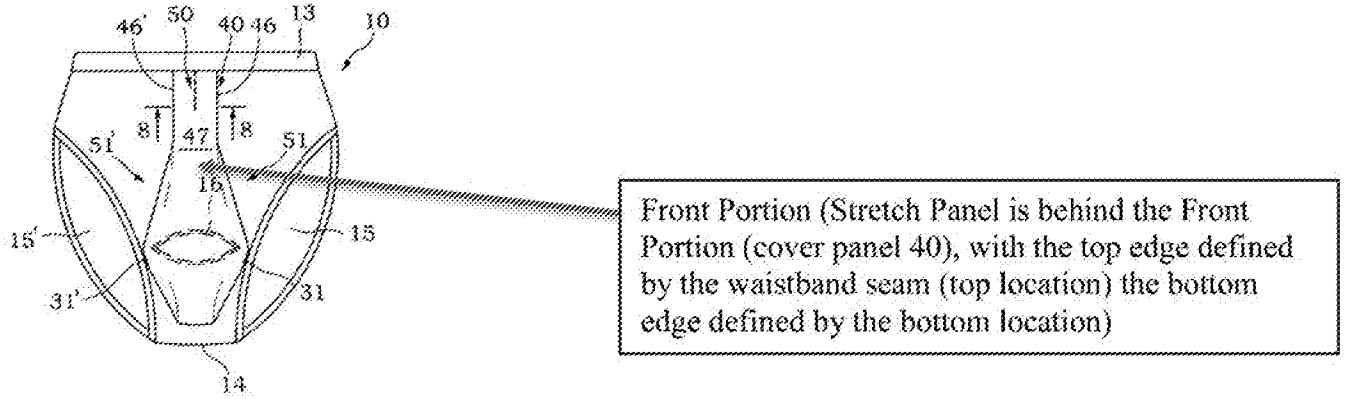 Fig.7 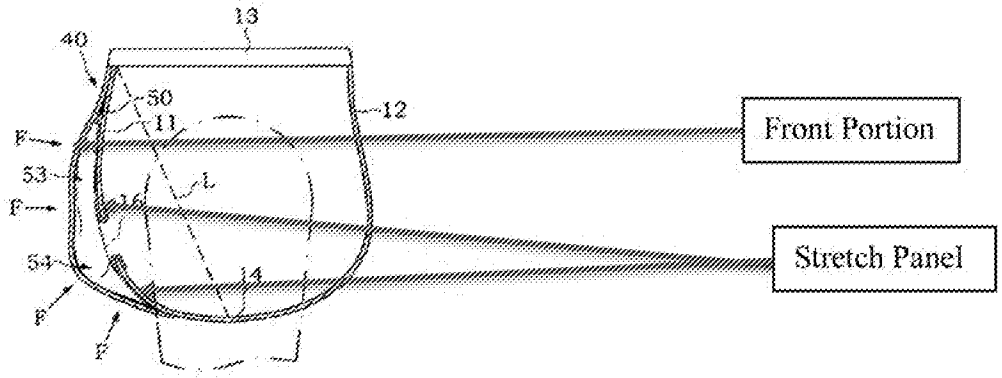 Fig.11

Claim 1	Exemplary Disclosure in Prior Art
	Furthermore, the 9132 Show-It Brief includes a stretch panel attached to the body inside the front portion. ***See,*** The Show-It 2009-2010 Catalog shows that the 9132 Show-It Brief includes a "stretch panel" attached to the body inside the "front portion" along the waistband seam, first seam, and side seams. The "stretch panel" of the 9132 Show-It Brief is referred to as the "Comfy Cup" in descriptions of the 9132 Show-It Brief. 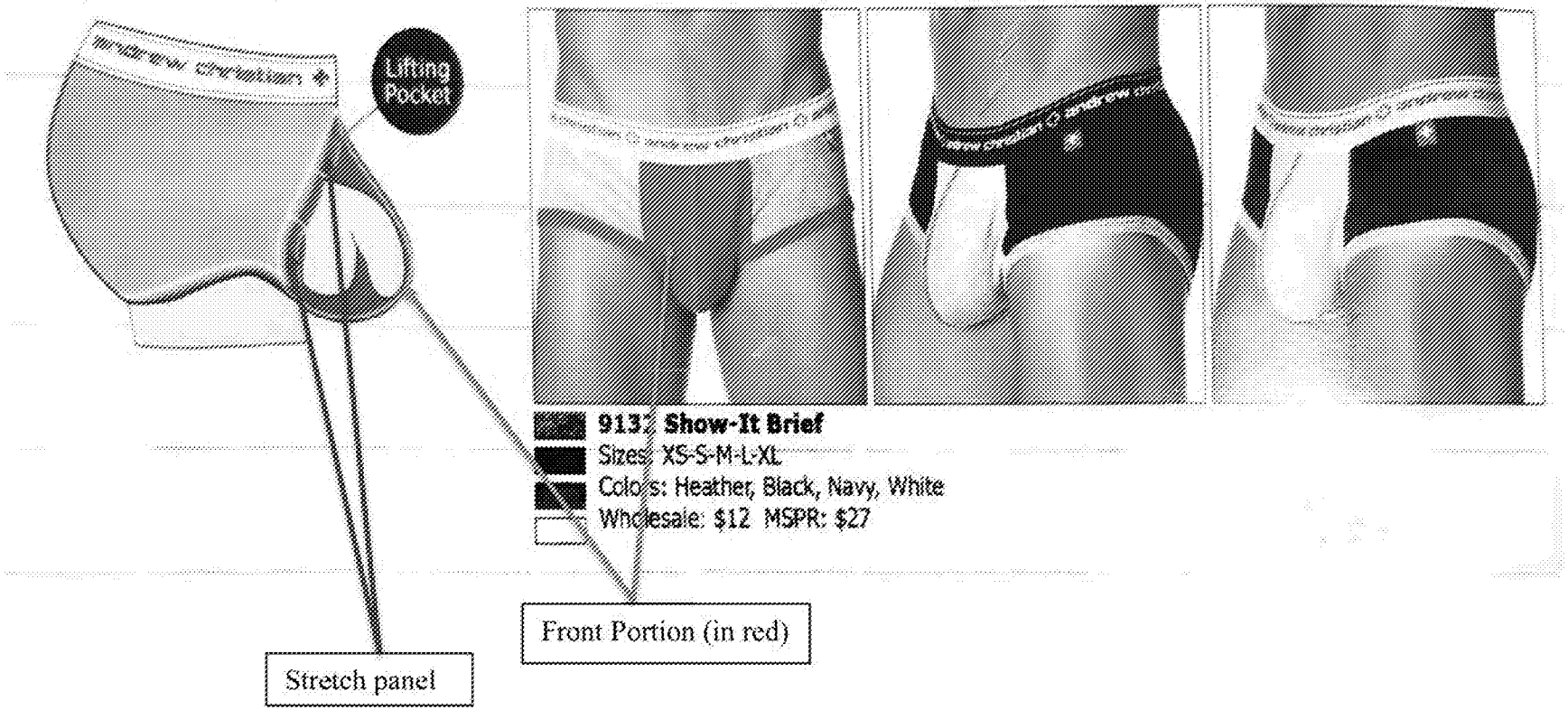 "Our Comfy Cup™ cradles and lifts…" Show-It 2009-2010 Catalog at ACI000094.

Claim 1	Exemplary Disclosure in Prior Art
	The ACI000040 publication shows an inside view of the 9132 Show-It Brief (as shown in the screenshots below), which shows that the 9132 Show-It Brief includes a "stretch panel" attached to the body inside the "front portion" along the waistband seam, first seam, and side seams.

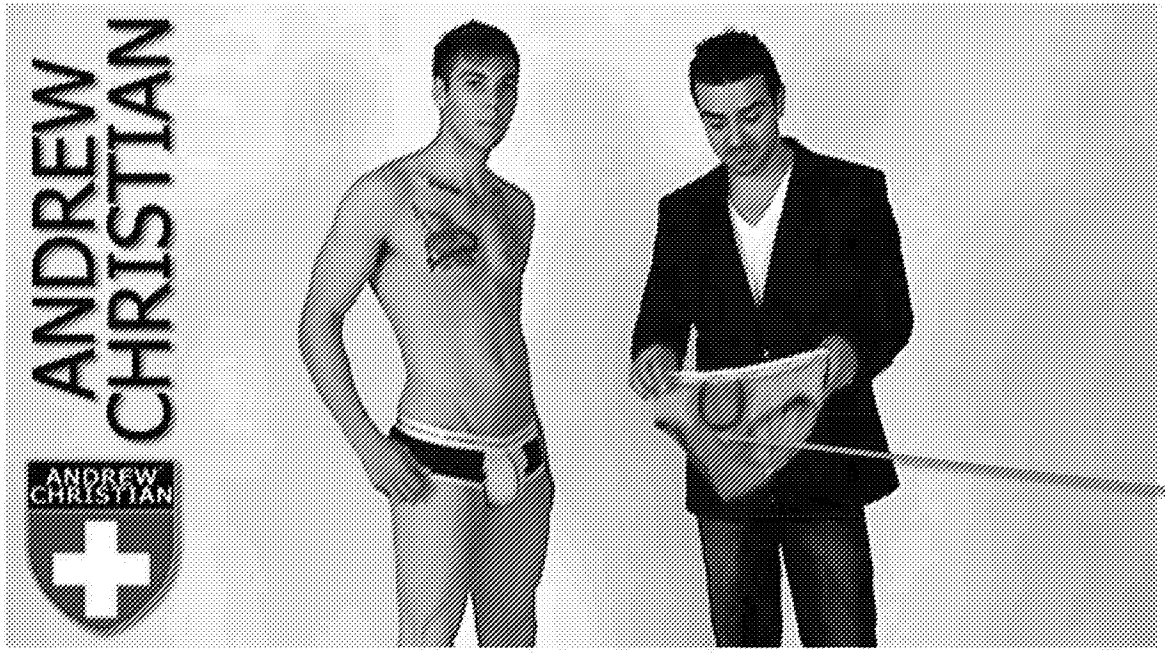

ACI000040 at 00:14.

Stretch Panel (the red comfy cup attached to the Body inside the Front Portion

Either Anticipation by U.S. Patent Publication No. 2004/0025218 (Published Feb. 12, 2004) or Obviousness In View of Andrew Christian Printed Publications and EP O 476 818 or the '369 Patent

Claim 1	Exemplary Disclosure in Prior Art
	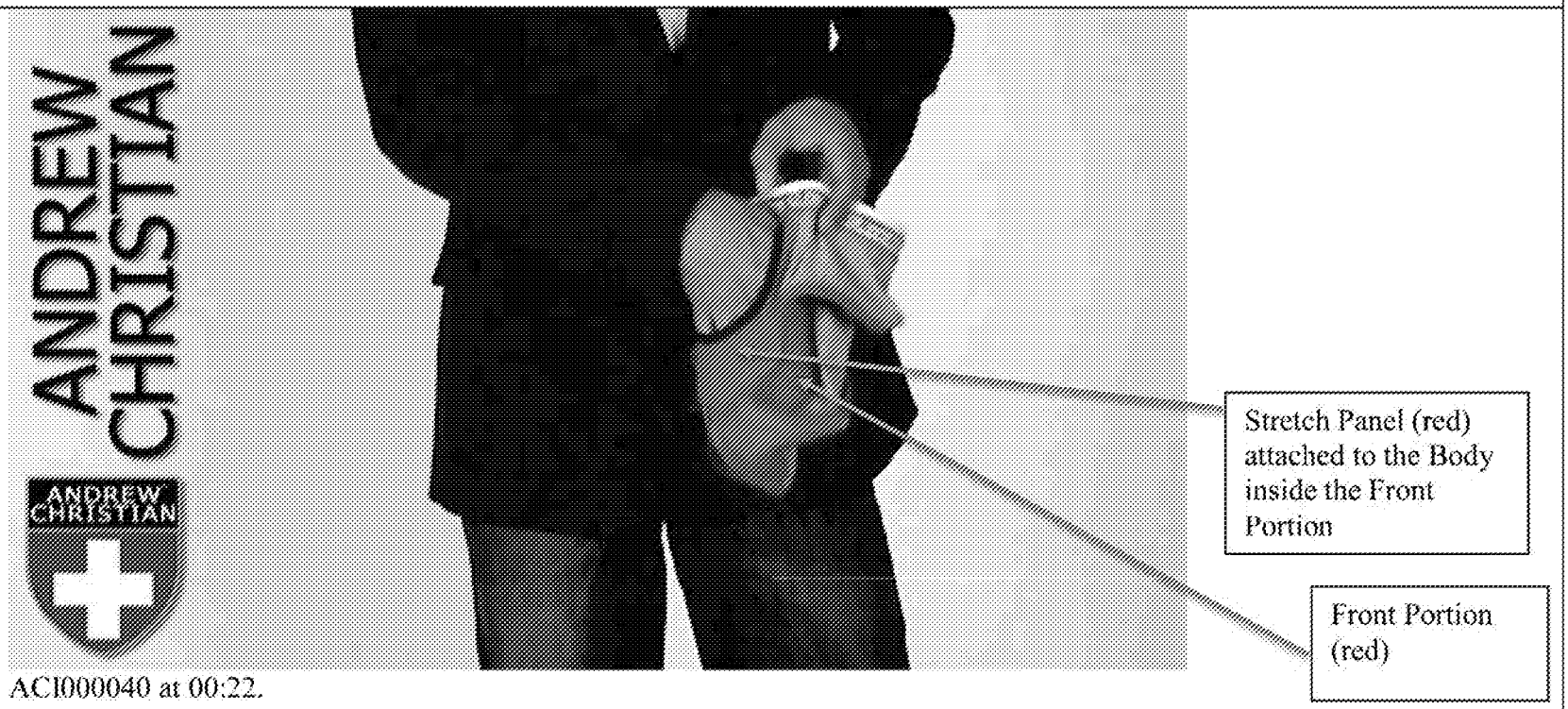 ACI000040 at 00:22. **The 9133 Show-It Boxer includes a stretch panel attached to the body inside the front portion.** ***See,*** The Show-It 2009 Line Sheet at ACI000092 discloses that the 9133 Show-It Boxer utilizes the same "Show-It Technology 2.0" utilized in the 9132 Show-It Brief. *See* Show-It 2009 Line Sheet at ACI000092, depicting both the 9132 Show-It Brief and the 9133 Show-It Boxer and describing "Show-It™ with Show-It Technology 2.0" with "our comfy cup." On information and belief, an inside view of the 9133 Show-It Boxer would show a stretch panel as shown in the screen shots of ACI000040 shown above in relation to the 9132 Show-It Brief.

Claim 1	Exemplary Disclosure in Prior Art
	To the extent Plaintiffs contend the '218 Publication does not expressly, implicitly, or inherently disclose a stretch panel attached to the body inside the front portion, one of ordinary skill would, based on one's knowledge and the '218 Publication, understand how to modify the disclosure of the '218 Publication to meet this limitation. Alternatively, one of ordinary skill could modify the '218 Publication in view of the Show-It 2009-2010 Catalog, the ACI000040 publicaiton, and/or the Show-It 2009 Line Sheet (disclosure above) to meet this limitation.
[1.3b] the stretch panel comprising a sheet of elastically resilient four-way stretch material	**The '218 Publication discloses a stretch panel comprising a sheet of elastically resilient four-way stretch material.** ***See,*** The only material disclosed by the '218 Publication is elastic, ventilating cloth, specifically cotton or spandex-contained mesh cloth (elastically resilient four-way stretch material). A "spandex-contained mesh cloth" is a fabric capable of stretching in each of two different directions with substantial elastic recovery toward its pre-stretching size and shape. "[0021] . . . The cover panel is made of a piece of elastic, ventilating cloth (cotton cloth or spandex-contained meshed cloth), having top and bottom ends respectively fixedly fastened to the waistband 13 and the crotch 14." **Furthermore, the 9132 Show-It Brief includes a stretch panel comprising a sheet of elastically resilient four-way stretch material.** ***See,*** In the ACI000040 publication, Andrew Christian is demonstrating the elastically resilient four way stretch of the "comfy cup" (the Stretch Panel) by placing his hand through the opening of the Stretch Panel and into the Pouch ("a concave space"), as the "comfy cup" (the Stretch Panel) stretches in length and width (four-way stretch):

Claim 1	Exemplary Disclosure in Prior Art
	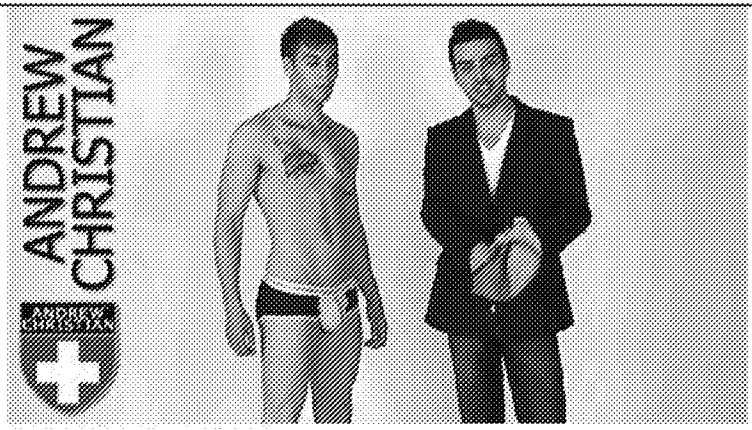 ACI000040 at 00:20. The "comfy cup" (the Stretch Panel) returns to its original shape (that is, it has "substantial elastic recovery toward its pre-stretching size and shape" and is therefore elastically resilient), once Andrew Christian removes his hand: 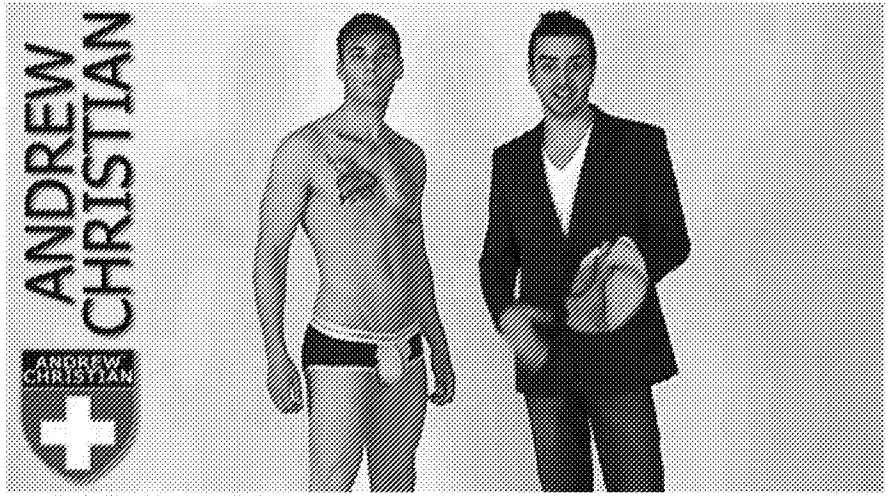 ACI000040 at 00.23.

Claim 1	Exemplary Disclosure in Prior Art
	The Show-It 2009 Line Sheet at ACI000092 discloses that the 9132 Show-It Brief's "Comfy Cup cradles and lifts." On information and belief, to cradle and provide lift, the "comfy cup" (Stretch Panel) must be comprised of an elastically resilient four-way stretch material. To the extent Plaintiffs contend the ACI000040 publication or the Show-It 2009 Line Sheet does not expressly, implicitly, or inherently disclose that the 9132 Show-It Brief includes a stretch panel comprising elastically resilient four-way stretch material, one of ordinary skill in the art would, based on one's knowledge and the disclosure from the ACI000040 publication or the Show-It 2009 Line Sheet, understand how to modify the 9132 Show-It Brief to meet this limitation. **The 9133 Show-It Boxer includes a stretch panel comprising a sheet of elastically resilient four-way stretch material.** ***See,*** The Show-It 2009 Line Sheet at ACI000092 discloses that the 9133 Show-It Boxer utilizes the same "Show-It Technology 2.0" utilized in the 9132 Show-It Brief. *See* Show-It 2009 Line Sheet at ACI000092, depicting both the 9132 Show-It Brief and the 9133 Show-It Boxer and describing "Show-It™ with Show-It Technology 2.0" with "our comfy cup." On information and belief, an inside view of the 9133 Show-It Boxer would show a "comfy cup" (that is, a Stretch Panel) inside the Front Portion as shown above in ACI000040 at 00:20 and 00:23 and the Stretch Panel would have the same elastically resilient four way stretch material. The Show-It 2009 Line Sheet at ACI000092 discloses that the 9133 Show-It Boxer's "Comfy Cup cradles and lifts." On information and belief, to cradle and provide lift, the "comfy cup" (Stretch Panel) must be comprised of an elastically resilient four-way stretch material. To the extent Plaintiffs contend the ACI000040 publication the Show-It 2009 Line Sheet does not expressly, implicitly, or inherently disclose that the 9133 Show-It Boxer includes a stretch panel comprising elastically resilient four-way stretch material, one of ordinary skill in the art would, based on one's knowledge and the disclosure from the ACI000040 publication or the Show-It 2009 Line Sheet, understand how to modify the 9133 Show-It Boxer to meet this limitation. To the extent Plaintiffs contend the '218 Publication does not expressly, implicitly, or inherently disclose a stretch panel comprising a sheet of elastically resilient four-way stretch material, one of ordinary skill in the art would, based on one's knowledge and the '218 Publication, understand how to modify the disclosure of the '218 Publication to meet this limitation.

Claim 1	Exemplary Disclosure in Prior Art
	Alternatively, one of ordinary skill could modify the `218 Publication in view of ACI000040 publication and/or the Show-It 2009 Line Sheet (disclosure above) to meet this limitation.
[1.3c] having a top edge attached to the body at a top location, a bottom edge attached to the body at a bottom location, side edges attached to the body at side seams extending substantially continuously along either side of the front portion and	**The '218 Publication discloses a stretch panel having a top edge attached to the body at a top location, a bottom edge attached to the body at a bottom location, side edges attached to the body at side seams extending substantially continuously along either side of the front portion.** ***See,*** In particular, the '218 Publication discloses that the cover panel (the front portion) attaches to the undergarment body, above at the waistband seam (top location), below at a seam at the crotch (bottom location), and seams on the sides via side flaps (side seams), which collectively define a space of the undergarment body with an opening for the wearer's penis and scrotum (the stretch panel) inside of the front portion. The '218 Publication thereby discloses that the stretch panel is attached at top location (via the waistband seam), bottom location (via first seam), and along side seams extending substantially continuously both sides of the front portion. "[0009] The cover panel has top and bottom ends respectively fixedly fastened to the waistband and the crotch . . . ." "[0022] FIGS. 2-5 show the first embodiment of the present invention. As illustrated, the cover panel 20 is an elongated piece of cloth, having a bottom center pleat 22 longitudinally upwardly extended from the bottom end thereof and two smoothly arched side flaps 21 and 21' symmetrically formed integral with two opposite lateral sides thereof near the bottom end. When fastened to the undergarment body 10, the upper part of the cover panel 20 defines with the undergarment body 10 a penis receiving space 23 above the opening 16 (see also FIG. 1) for receiving the user's penis, and the side flaps 21 and 21' define with the undergarment body 10a scrotum receiving space 24 below the opening 16 for receiving the user's scrotum. Further, because of the effect of the bottom center pleat 22, the lower part of the cover panel 20 protrudes forwards from the undergarment body 10, forming a three-dimensional status. Further, the border areas of the side flaps 21 and 21' are respectively stitched to the undergarment body 10, forming stitched lines 31 and 31' that hold the cover panel 20 in the center position against biasing." "[0024] Referring to FIGS. 4, 5, 9, 10 and 11, when the undergarment put on the user's body, the undergarment body 10 and the cover panel 20 or 40 are stretched outwards into a three-dimensional status. At this time, the elastic material property of the cover panel 20 or 40 produces components of force F in direction toward the imaginary straight line L between the waistband and the crotch, keeping the cover panel 20 or 40 closely attached to the lower part of the user's abdomen."

Claim 1	Exemplary Disclosure in Prior Art
	"[0025] Referring to FIGS. 4 and 5, when the undergarment of the first embodiment of the present invention put on the user's body, the user's penis and scrotum are extended out of the undergarment body 10 through the opening 16, keeping the scrotum received in the scrotum receiving space 24 and the penis received in the penis receiving space 23. When the user adjusted the undergarment to the best fit position, the cover panel 20 is forced by its elastic material property to cover the penis and to secure the penis to the inside of the penis receiving space 23." "[0027] The elastic material property and the effect of the stitched line 50 cause the side cover portions 49 and 49' to hold the user's penis positively in the penis receiving space 53 in vertical, preventing the user's penis from falling to the outside of the cover panel 40." "The men's undergarment as claimed in claim 1, wherein said cover panel has an upper part, which defines with said undergarment body said penis receiving space, and two smoothly arched side flaps symmetrically bilaterally formed integral with a lower part thereof and defining with said undergarment body said scrotum receiving space." (Claim 4) "The men's undergarment as claimed in claim 5, wherein the outer portion of each of said arched side flap is respectively stitched to said undergarment body, forming a respective stitched line." (Claim 6) 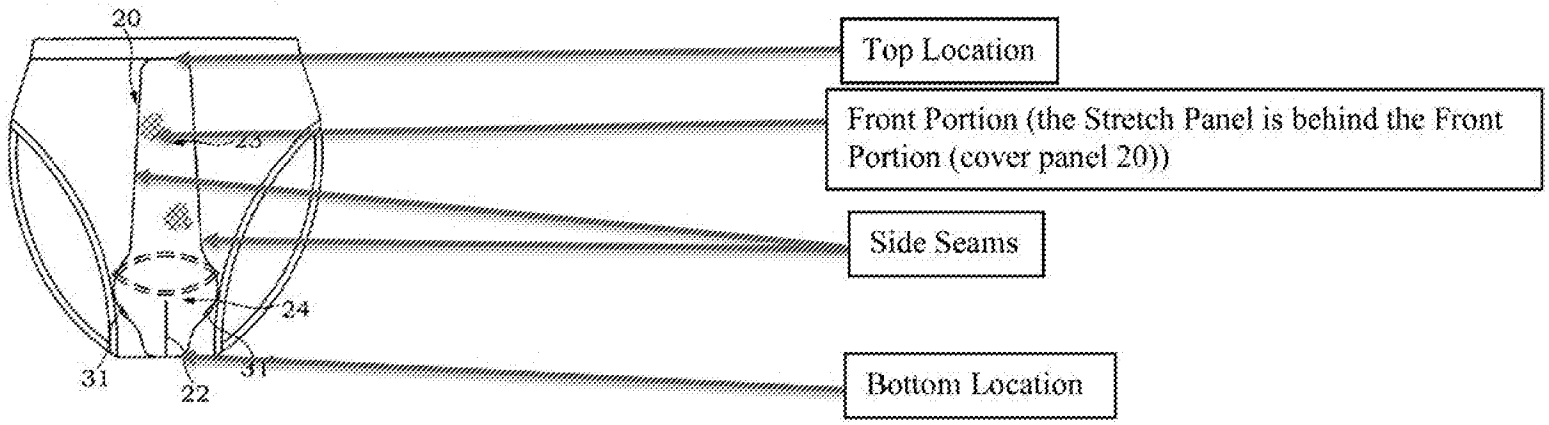 Fig.3

Either Anticipation by U.S. Patent Publication No. 2004/0025218 (Published Feb. 12, 2004) or Obviousness In View of Andrew Christian Printed Publications and EP O 476 818 or the '369 Patent

Claim 1	Exemplary Disclosure in Prior Art
	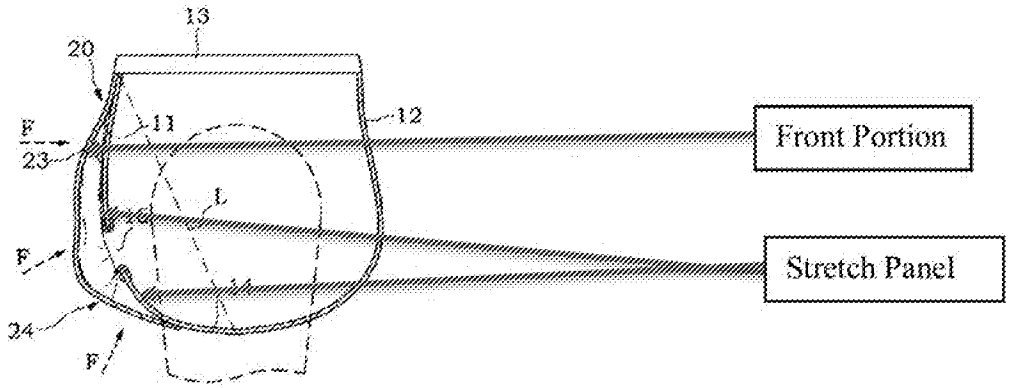 Fig.5

Either Anticipation by U.S. Patent Publication No. 2004/0025218 (Published Feb. 12, 2004) or Obviousness In View of Andrew Christian Printed Publications and EP O 476 818 or the '369 Patent

Claim 1	Exemplary Disclosure in Prior Art
	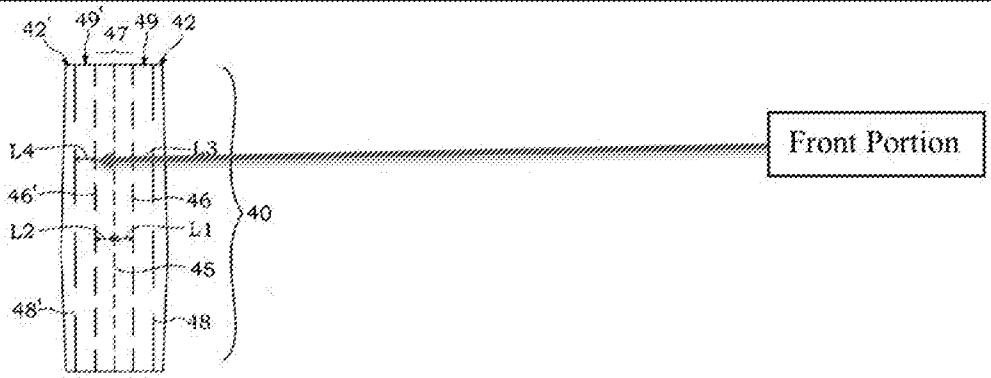 Fig.6

Either Anticipation by U.S. Patent Publication No. 2004/0025218 (Published Feb. 12, 2004) or Obviousness In View of Andrew Christian Printed Publications and EP O 476 818 or the '369 Patent

Claim 1	Exemplary Disclosure in Prior Art
	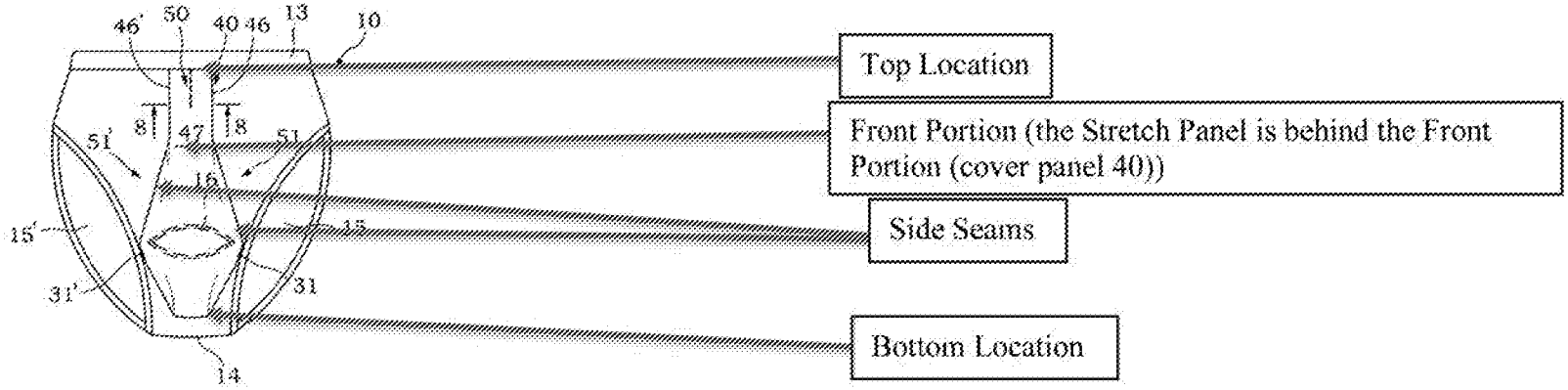 Fig.7 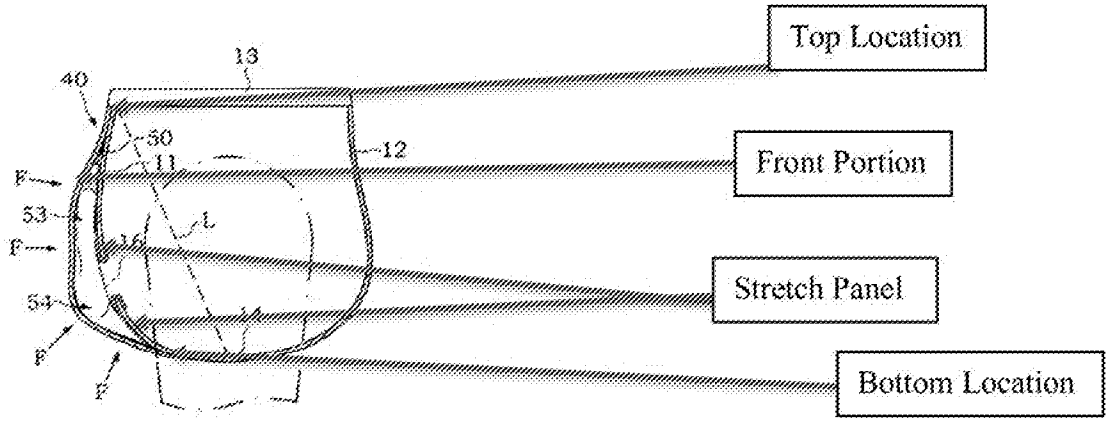 Fig.11

Claim 1	Exemplary Disclosure in Prior Art
	Furthermore, the 9132 Show-It Brief includes a stretch panel having a top edge attached to the body at a top location, a bottom edge attached to the body at a bottom location, side edges attached to the body at side seams extending substantially continuously along either side of the front portion. ***See,*** The ACI000040 publication discloses that the 9132 Show-It Brief's "stretch panel" (the comfy cup) has a top edge attached to the body at the waistband seam (the top location), a bottom edge attached to the body at the first seam (the bottom location), and side edges attached to the body at side seams extending continuously along either side of the "front portion," as shown in the screenshot below. 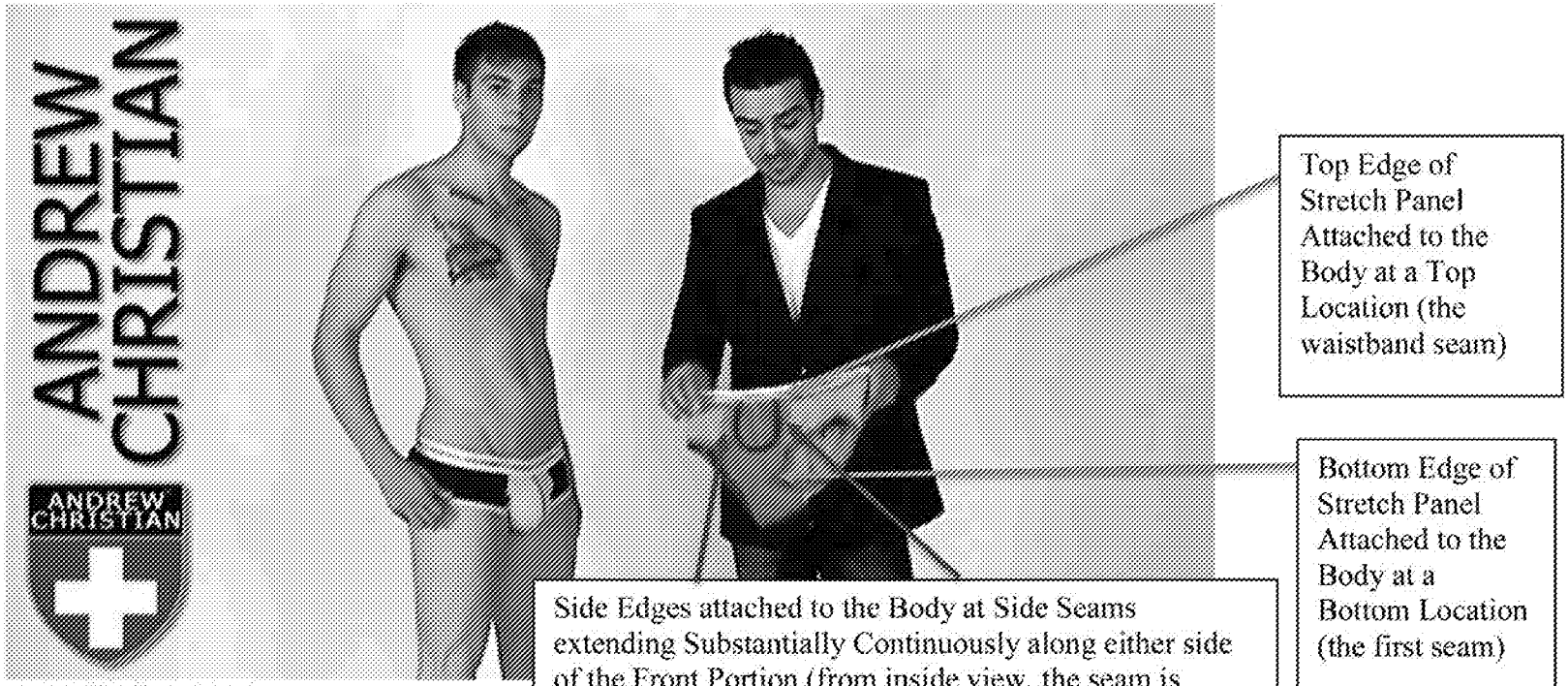 ACI000040 at 00:14.

Claim 1	Exemplary Disclosure in Prior Art
	The Show-It 2009-2010 Catalog also depicts the 9132 Show-It Brief's "stretch panel" (the comfy cup) with a top edge attached to the body at the waistband seam (the top location), a bottom edge attached to the body at the first seam (the bottom location), and side edges attached to the body at side seams extending continuously along either side of the "front portion." 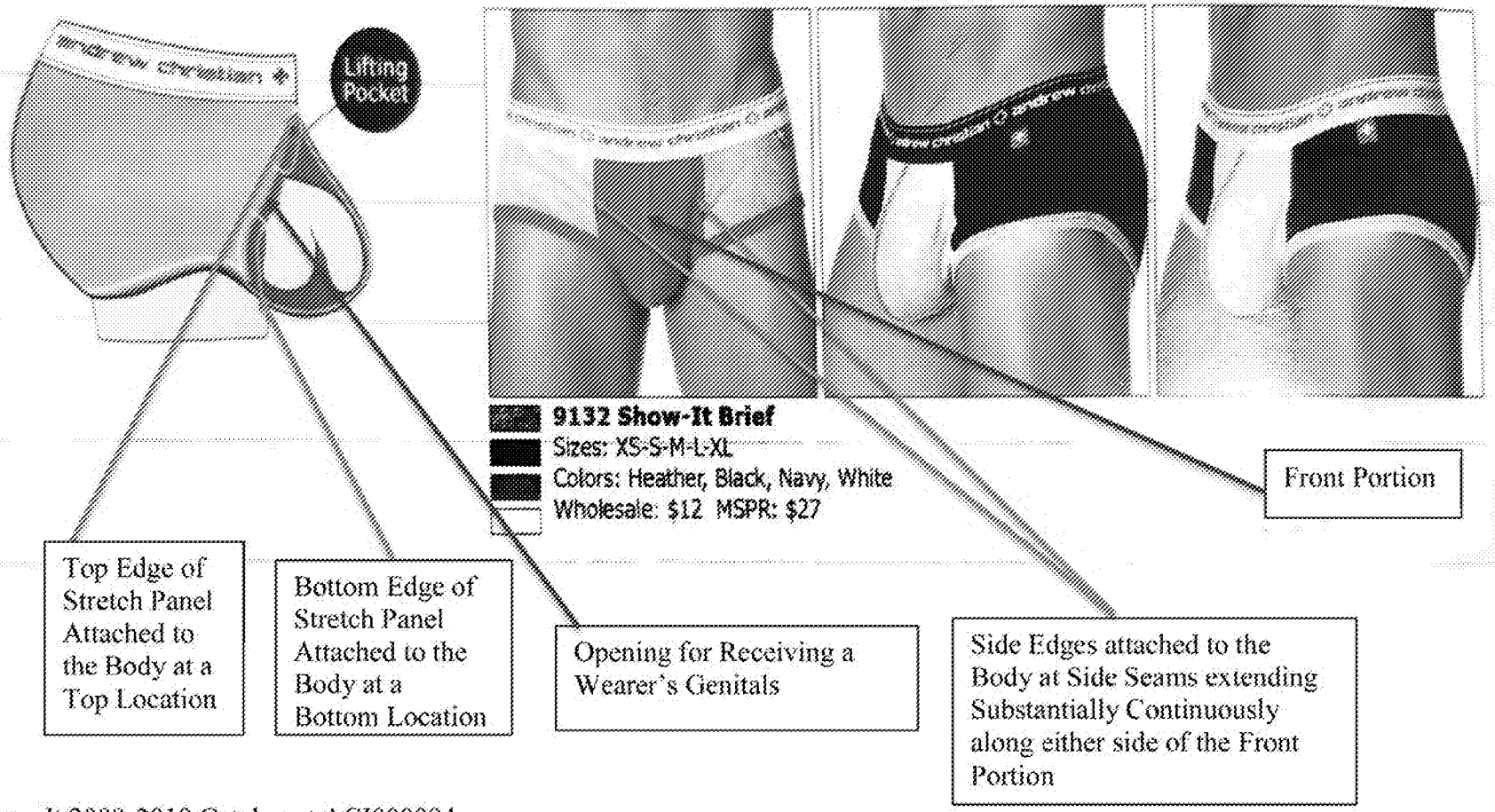 Show-It 2009-2010 Catalog at ACI000094.

Claim 1	Exemplary Disclosure in Prior Art
	The 9133 Show-It Boxer includes a stretch panel having a top edge attached to the body at a top location, a bottom edge attached to the body at a bottom location, side edges attached to the body at side seams extending substantially continuously along either side of the front portion. ***See,*** The Show-It 2009 Line Sheet at ACI000092 discloses that the 9133 Show-It Boxer utilizes the same "Show-It Technology 2.0" utilized in the 9132 Show-It Brief. *See* Show-It 2009 Line Sheet at ACI000092, depicting both the 9132 Show-It Brief and the 9133 Show-It Boxer and describing "Show-It™ with Show-It Technology 2.0" with "our comfy cup." On information and belief, the 9133 Show-It Boxer utilizes the same "comfy cup" (that is, a Stretch Panel) which has a top edge attached to the body at the waistband seam (the top location) and a bottom edge attached to the body at the first seam (the bottom location) as shown in the image from the Show-It 2009-2010 Catalog above. The Show-It 2009 Line Sheet depicts the 9133 Show-It Boxer's "stretch panel" (the comfy cup) having side edges attached to the body at side seams extending continuously along either side of the "front portion," as shown in the images from the Show-It 2009 Line Sheet below.

Claim 1	Exemplary Disclosure in Prior Art
	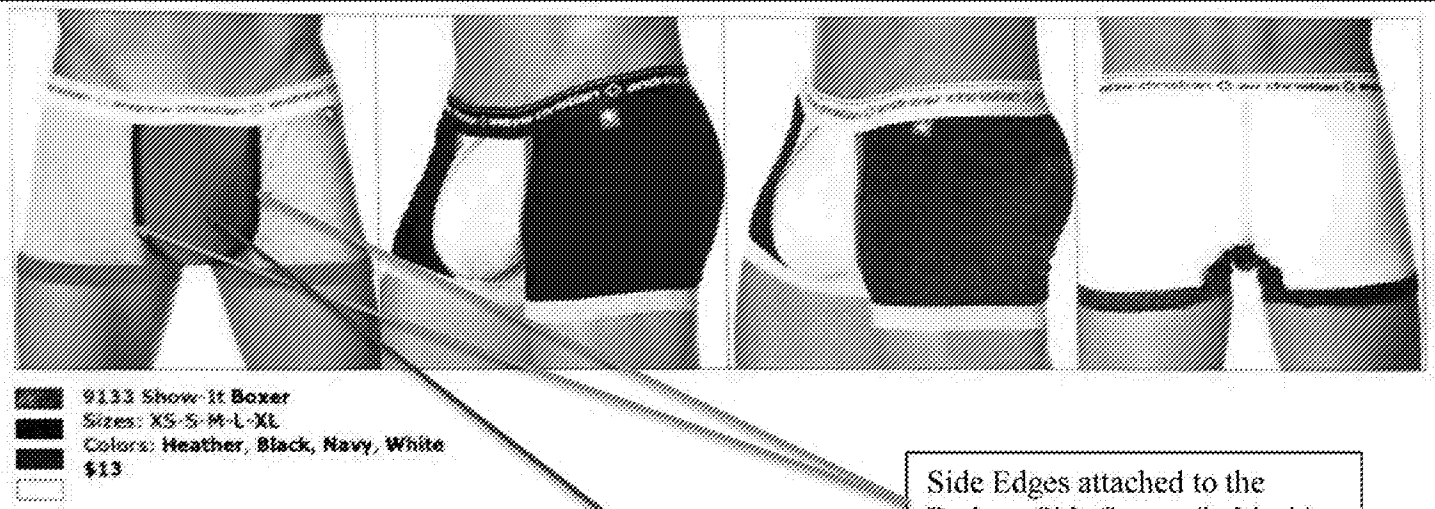 Show-It 2009 Line Sheet at ACI000092 Front Portion Side Edges attached to the Body at Side Seams (in black) extending Substantially Continuously along either side of the Front Portion To the extent Plaintiffs contend the '218 Publication does not expressly, implicitly, or inherently disclose a stretch panel attached to the body inside the front portion having a top edge attached to the body at a top location, a bottom edge attached to the body at a bottom location, side edges attached to the body at side seams extending substantially continuously along either side of the front portion, one of ordinary skill in the art would, based on one's knowledge and the '218 Publication, understand how to modify the disclosure of the '218 Publication to meet this limitation. Alternatively, one of ordinary skill could modify the '218 Publication in view of the ACI000040 publication, the Show-It 2009-2010 Catalog, and/or the Show-It 2009 Line Sheet (disclosure above) to meet this limitation.
[1.3d] an opening for receiving a wearer's	**The '218 Publication discloses an opening for receiving a wearer's genitals having a rounded bottom edge and opposing side edges that are spaced apart from one another on either side of the opening.** ***See,***

Either Anticipation by U.S. Patent Publication No. 2004/0025218 (Published Feb. 12, 2004) or Obviousness In View of Andrew Christian Printed Publications and EP O 476 818 or the '369 Patent

Claim 1	Exemplary Disclosure in Prior Art
genitals, the opening having a rounded bottom edge and opposing side edges that are spaced apart from one another on either side of the opening;	"[0025] Referring to FIGS. 4 and 5, when the undergarment of the first embodiment of the present invention put on the user's body, the user's penis and scrotum are extended out of the undergarment body 10 through the opening 16 [the Opening for Receiving a Wearer's Genitals], keeping the scrotum received in the scrotum receiving space 24 and the penis received in the penis receiving space 23." 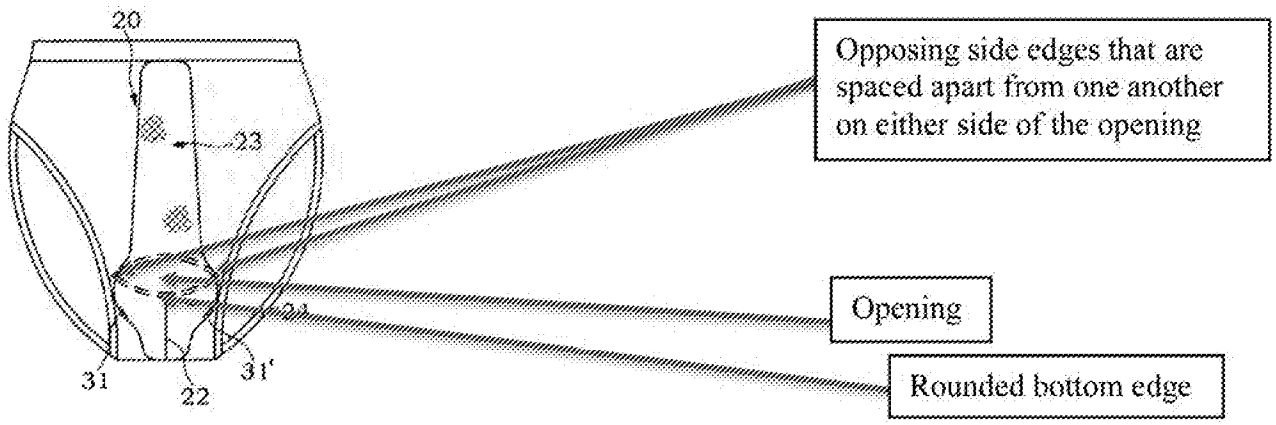 Fig.3

Either Anticipation by U.S. Patent Publication No. 2004/0025218 (Published Feb. 12, 2004) or Obviousness In View of Andrew Christian Printed Publications and EP O 476 818 or the '369 Patent

Claim 1	Exemplary Disclosure in Prior Art
	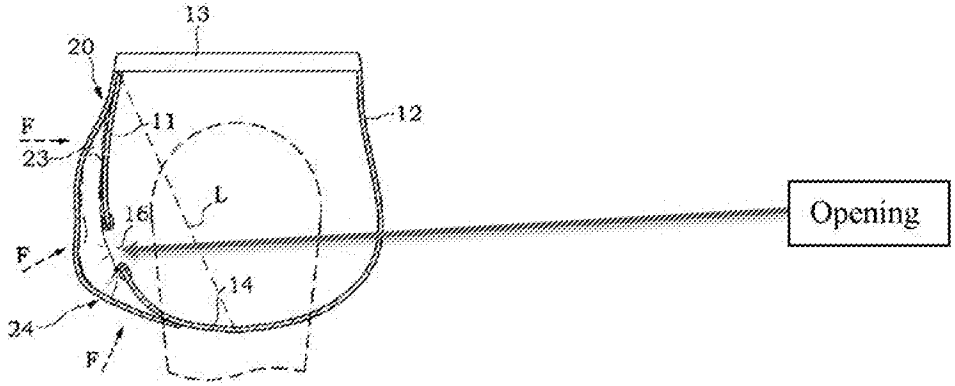 Fig.5 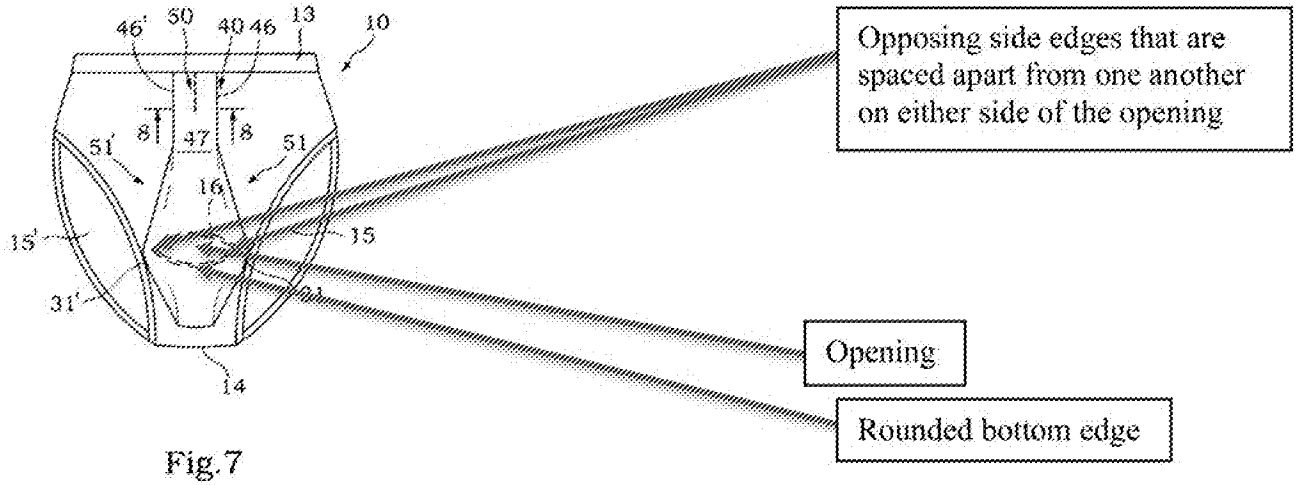 Fig.7

Either Anticipation by U.S. Patent Publication No. 2004/0025218 (Published Feb. 12, 2004) or Obviousness In View of Andrew Christian Printed Publications and EP O 476 818 or the '369 Patent

Claim 1	Exemplary Disclosure in Prior Art
	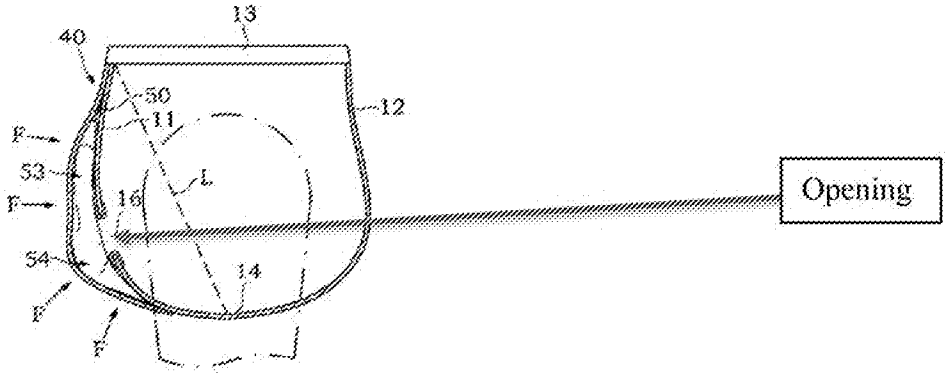 Fig. 11 **Furthermore, the "stretch panel" of the 9132 Show-It Brief includes an opening for receiving a wearer's genitals, the opening having a rounded bottom edge and opposing side edges that are spaced apart from one another on either side of the opening.** ***See,*** The Show-It 2009-2010 Catalog depicts the 9132 Show-It Brief's Stretch Panel ("Comfy cup") having an opening for receiving a wearer's genitals.

Either Anticipation by U.S. Patent Publication No. 2004/0025218 (Published Feb. 12, 2004) or Obviousness In View of Andrew Christian Printed Publications and EP O 476 818 or the '369 Patent

Claim 1	Exemplary Disclosure in Prior Art
	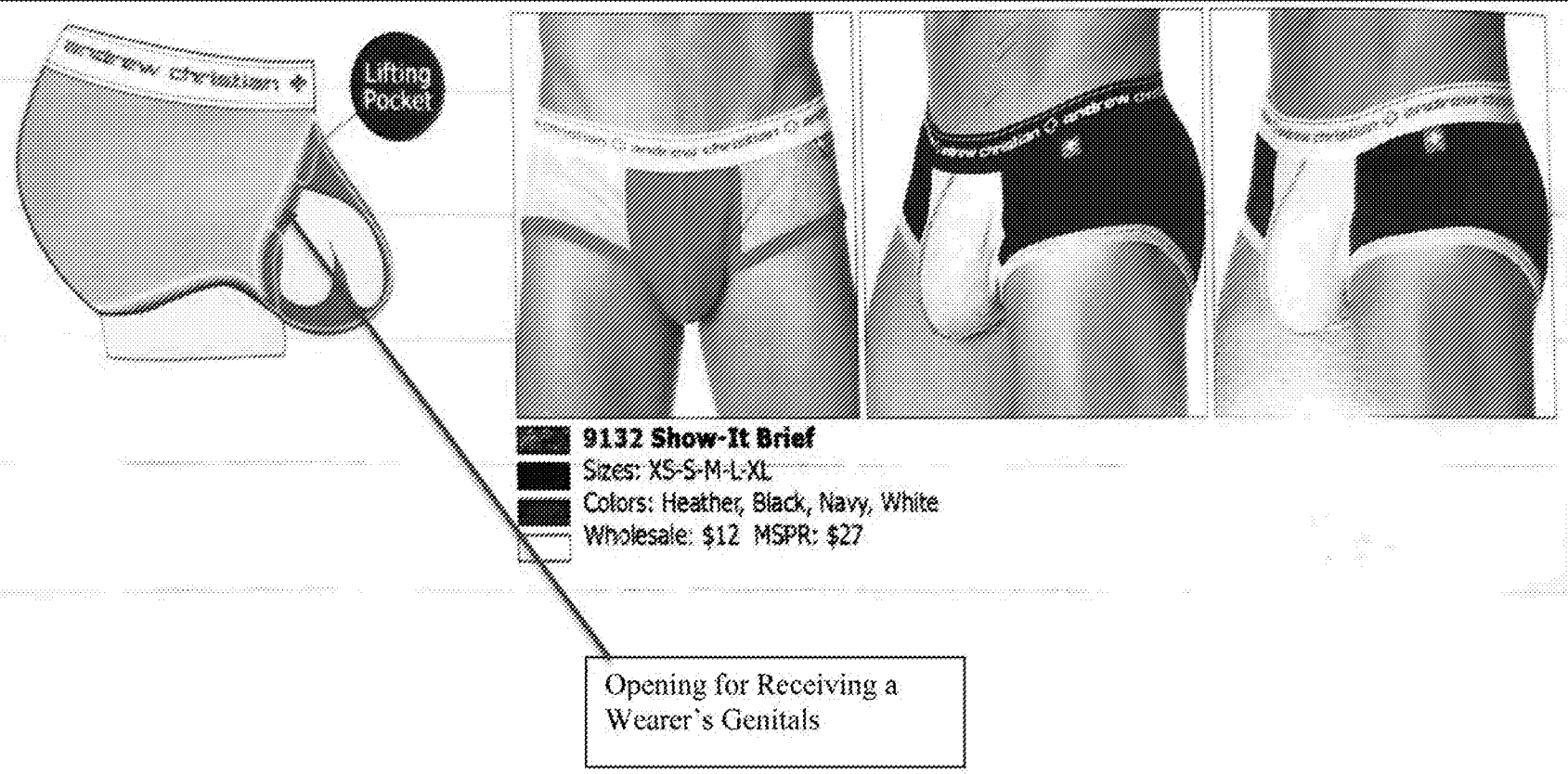 Show-It 2009-2010 Catalog at ACI000094. The ACI000040 publication includes an inside view of the 9132 Show-It Brief, which shows a Stretch Panel ("comfy cup") having an opening for receiving a wearer's genitals, the opening having a rounded bottom edge and opposing side edges that are spaced apart from one another on either side of the opening. The edges of the opening of the 9132 Show-It Brief are outlined by the black elastic lining, which is rounded on the bottom and has opposing side edges spaced apart from each other.

Either Anticipation by U.S. Patent Publication No. 2004/0025218 (Published Feb. 12, 2004) or Obviousness In View of Andrew Christian Printed Publications and EP O 476 818 or the '369 Patent

Claim 1	Exemplary Disclosure in Prior Art
	 ACI000040 at 00:14. **The "stretch panel" of the 9133 Show-It Boxer includes an opening for receiving a wearer's genitals, the opening having a rounded bottom edge and opposing side edges that are spaced apart from one another on either side of the opening.** ***See,*** The Show-It 2009 Line Sheet at ACI000092 discloses that the 9133 Show-It Boxer utilizes the same "Show-It Technology 2.0" utilized in the 9132 Show-It Brief. *See* Show-It 2009 Line Sheet at ACI000092, depicting both the 9132 Show-It Brief and the 9133 Show-It Boxer and describing "Show-It™ with Show-It Technology 2.0" with "our comfy cup." On information and belief, and an inside view of the 9133 Show-It Boxer would show a "comfy cup" (that is, a Stretch Panel) with the same opening having a rounded

Claim 1	Exemplary Disclosure in Prior Art
	bottom edge and opposing side edges that are spaced apart from one another on either side of the opening as shown above in ACI000040 at 00:14.
[1.4a] the stretch panel being resiliently elastic both in a direction between the top edge and the bottom edge and in a direction between the side edges,	**The '218 Publication discloses a stretch panel being resiliently elastic both in a direction between the top edge and the bottom edge and in a direction between the side edges.** ***See,*** In particular, the '218 Publication discloses the stretch panel, as discussed in 1.3, above. The only material disclosed by the '218 Publication is an elastically resilient four-way stretch material), as discussed in 1.3, above, which would be resiliently elastic both in a direction between the top edge and the bottom edge and in a direction between the side edges. "[0021] . . . The cover panel is made of a piece of elastic, ventilating cloth (cotton cloth or spandex- contained meshed cloth), having top and bottom ends respectively fixedly fastened to the waistband 13 and the crotch 14." A "spandex-contained meshed cloth" is a fabric capable of stretching in each of two different directions with substantial elastic recovery toward its pre-stretching size and shape. "[0024] Referring to FIGS. 4, 5, 9, 10 and 11, when the undergarment put on the user's body, the undergarment body 10 and the cover panel 20 or 40 are stretched outwards into a three-dimensional status. At this time, the elastic material property of the cover panel 20 or 40 produces components of force F in direction toward the imaginary straight line L between the waistband and the crotch, keeping the cover panel 20 or 40 closely attached to the lower part of the user's abdomen." "[0025] . . . When the user adjusted the undergarment to the best fit position, the cover panel 20 is forced by its elastic material property to cover the penis and to secure the penis to the inside of the penis receiving space 23. At the same time, the cover panel 20 supports the scrotum in the scrotum receiving space 24." "[0027] The elastic material property and the effect of the stitched line 50 cause the side cover portions 49 and 49' to hold the user's penis positively in the penis receiving space 53 in vertical, preventing the user's penis from falling to the outside of the cover panel 40. Because the three-dimensional profile of the cover panel 40 is shaped like a water drop, the cover panel 40 effectively covers and supports the user's scrotum." *See also* [0022], [0023], [0026], [0028].

Either Anticipation by U.S. Patent Publication No. 2004/0025218 (Published Feb. 12, 2004) or Obviousness In View of Andrew Christian Printed Publications and EP O 476 818 or the '369 Patent

Claim 1	Exemplary Disclosure in Prior Art
	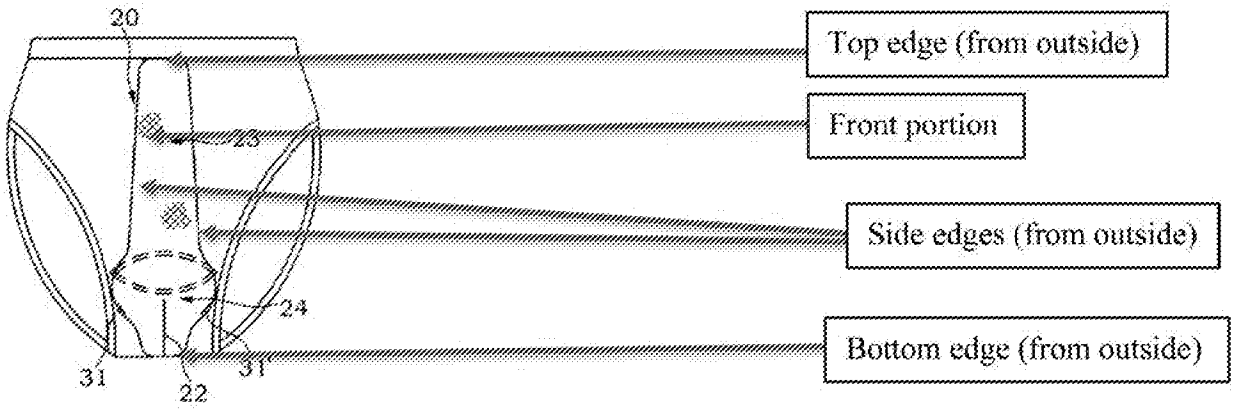 Fig.3 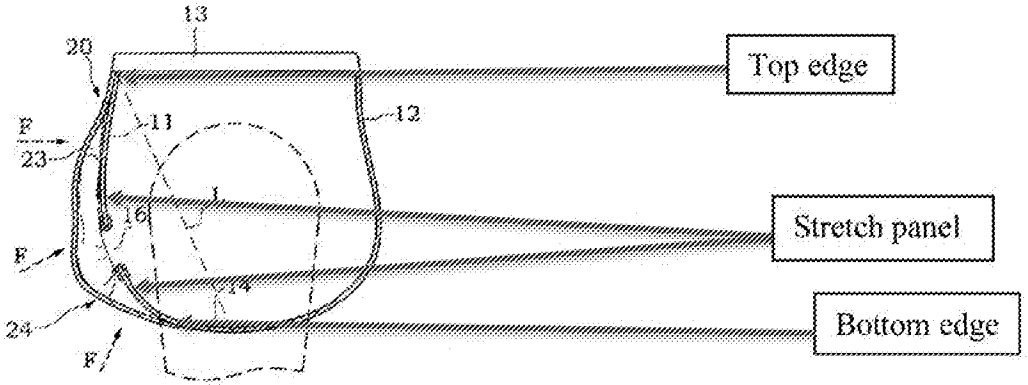 Fig.5

Either Anticipation by U.S. Patent Publication No. 2004/0025218 (Published Feb. 12, 2004) or Obviousness In View of Andrew Christian Printed Publications and EP O 476 818 or the '369 Patent

Claim 1	Exemplary Disclosure in Prior Art
	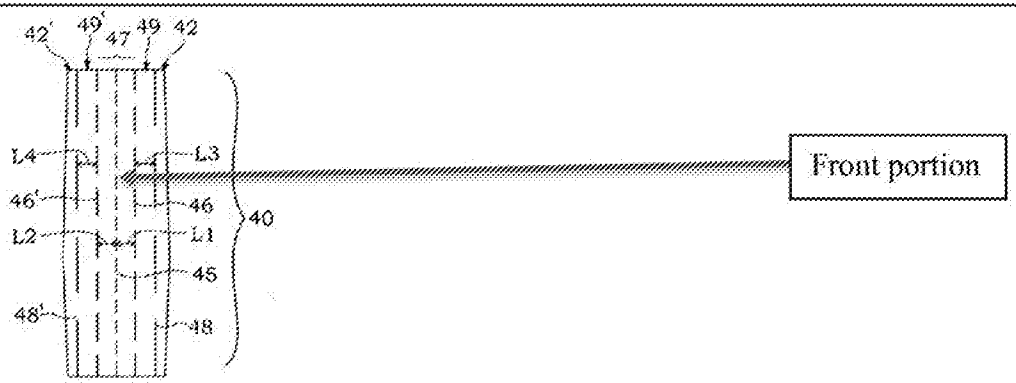 Fig.6

Either Anticipation by U.S. Patent Publication No. 2004/0025218 (Published Feb. 12, 2004) or Obviousness In View of Andrew Christian Printed Publications and EP O 476 818 or the '369 Patent

Claim 1	Exemplary Disclosure in Prior Art
	 Fig.7 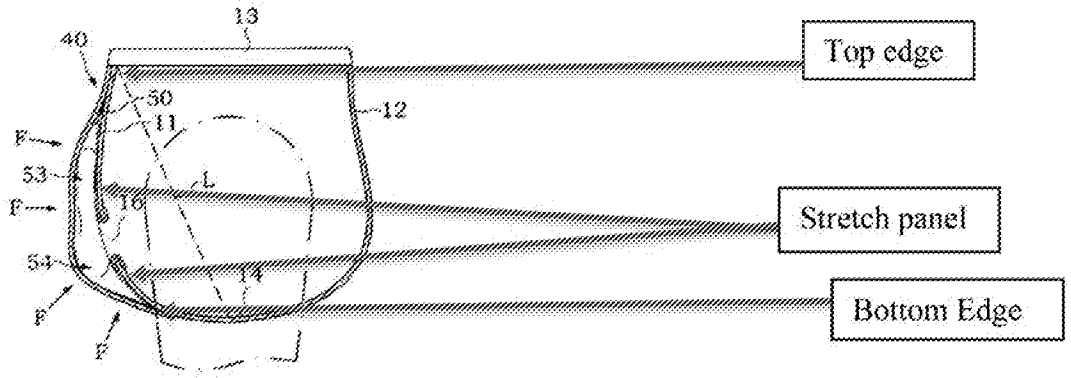 Fig.11

Claim 1	Exemplary Disclosure in Prior Art
	Furthermore, the 9132 Show-It Brief includes a stretch panel being resiliently elastic both in a direction between the top edge and the bottom edge and in a direction between the side edges. ***See,*** In the screenshot from the ACI000040 publication below, Andrew Christian is demonstrating the elastically resilient four way stretch of the "comfy cup" (the Stretch Panel) by placing his hand through the opening of the Stretch Panel and into the Pouch, as the "comfy cup" (the Stretch Panel) stretches in length (a direction between the top edge and bottom edge) and width (a direction between the side edges): 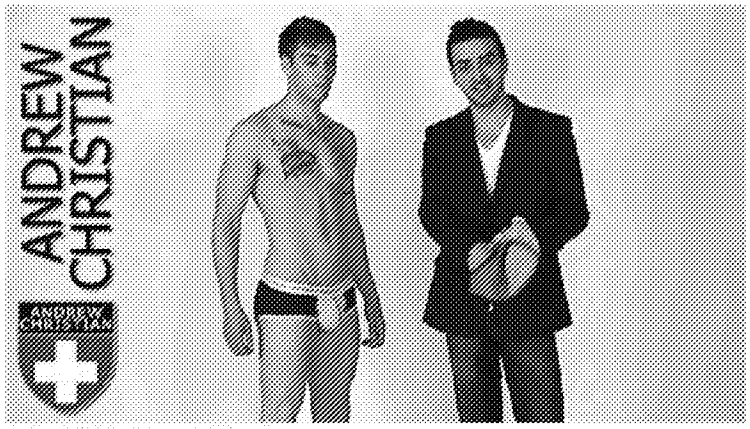 ACI000040 at 00:20. The "comfy cup" (the Stretch Panel) returns to its original shape (that is, it has "substantial elastic recovery toward its pre-stretching size and shape" and is therefore elastically resilient), once Andrew Christian removes his hand:

Claim 1	Exemplary Disclosure in Prior Art
	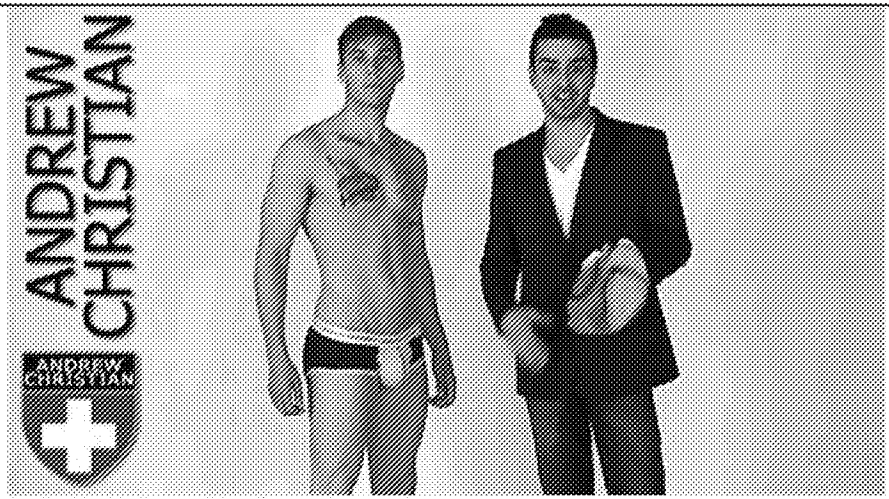 ACI000040 at 00.23. The ACI000040 publication at 00:25-00:29 shows Andrew Christian pulling on the Stretch Panel ("comfy cup") to show its elasticity, as he says "the binding here is elastic and it moves and gives with your body." *See* ACI000040 at 00:26 (a screenshot of Andrew Christian pulling on the "comfy cup").

Claim 1	Exemplary Disclosure in Prior Art
	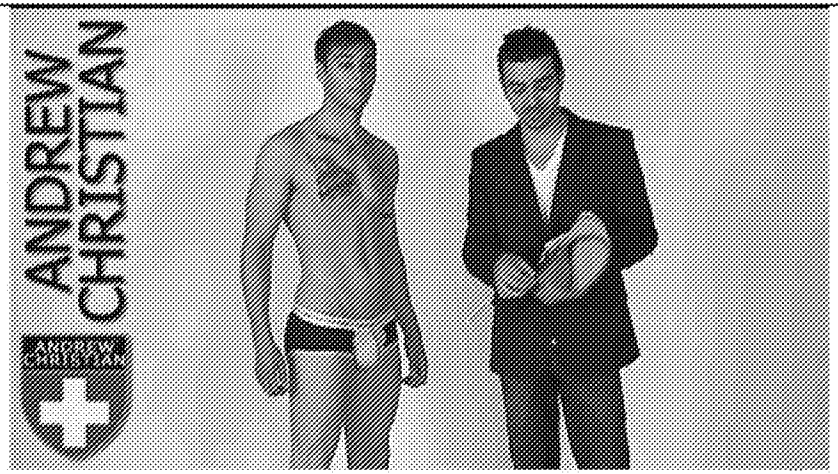 ACI000040 at 00:26. To the extent Plaintiffs contend the ACI000040 publication does not expressly, implicitly, or inherently disclose that the 9132 Show-It Brief includes the stretch panel (the "comfy cup") being resiliently elastic both in a direction between the top edge and the bottom edge and in a direction between the side edges, one of ordinary skill in the art would, based on one's knowledge and the 9132 Show-It Brief, would understand how to modify the 9132 Show-It Brief to meet this limitation. **The 9133 Show-It Boxer includes a stretch panel being resiliently elastic both in a direction between the top edge and the bottom edge and in a direction between the side edges.** ***See,*** The Show-It 2009 Line Sheet at ACI000092 discloses that the 9133 Show-It Boxer utilizes the same "Show-It Technology 2.0" utilized in the 9132 Show-It Brief. *See* Show-It 2009 Line Sheet at ACI000092, depicting both the 9132 Show-It Brief and the 9133 Show-It Boxer and describing "Show-It™ with Show-It Technology 2.0" with "our comfy cup." On information and belief, the inside view of the 9133 Show-It Boxer would show a "comfy cup" (that is, a Stretch Panel) inside the Front Portion as disclosed in the ACI000040 publication at 00:20, 00:23, and 00:26. To the extent Plaintiffs contend the ACI000040 publication or the Show-It 2009 Line Sheet, does not expressly, implicitly, or inherently disclose that the 9133 Show-It Boxer includes the stretch panel (the "comfy cup") being resiliently elastic both in a

Claim 1	Exemplary Disclosure in Prior Art
	direction between the top edge and the bottom edge and in a direction between the side edges, one of ordinary skill in the art would, based on one's knowledge and the 9133 Show-It Boxer, understand how to modify the 9133 Show-It Boxer to meet this limitation. To the extent Plaintiffs contend the '218 Publication does not expressly, implicitly, or inherently disclose the stretch panel being resiliently elastic both in a direction between the top edge and the bottom edge and in a direction between the side edges, one of ordinary skill in the art would, based on one's knowledge and the '218 Publication, would understand how to modify '218 Publication to meet this limitation. Alternatively, one of ordinary skill could modify the '218 Publication in view of the ACI000040 publication and/or the Show-It 2009 Line Sheet (disclosure above) to meet this limitation.
[1.4b] the stretch panel having a length when unstretched smaller than a length measured along the front portion between the top and bottom locations and a width when unstretched smaller than a width measured	**The '218 Publication discloses a stretch panel having a length when unstretched smaller than a length measured along the front portion between the top and bottom locations and a width when unstretched smaller than a width measured along the front portion between the side seams.** ***See,*** In particular, because the cover panel (front portion) is attached on the outside of the stretch panel, as described in 1.3, above, and because the front portion contains a center pleat to form a three-dimensional status, the length and width of the stretch panel has a length when unstretched smaller than the length measured along the front portion between the top and bottom locations and a width when unstretched smaller than a width measured along the front portion between the side seams. The creases found in an alternative embodiment's front portion (cover panel 40) further disclose this limitation. "[0021] . . . The cover panel is made of a piece of elastic, ventilating cloth (cotton cloth or spandex- contained meshed cloth), having top and bottom ends respectively fixedly fastened to the waistband 13 and the crotch 14." "[0022] When fastened to the undergarment body 10, the upper part of the cover panel 20 defines with the undergarment body 10 a penis receiving space 23 above the opening 16 (see also FIG. 1) for receiving the user's penis, and the side flaps 21 and 21' define with the undergarment body 10a scrotum receiving space 24 below the opening 16 for receiving the user's scrotum. Further, because of the effect of the bottom center pleat 22, the lower part of the cover panel 20 protrudes forwards from the undergarment body 10, forming a three-dimensional status."

Claim 1	Exemplary Disclosure in Prior Art
along the front portion between the side seams	"[0023] FIGS. 6-11 show a men's undergarment according to the second embodiment of the present invention. According to this alternate form, the cover panel 40 has a longitudinal center axis 45, two first creases 46 and 46' bilaterally equally spaced from the longitudinal center axis 45 at distance L1:L2 (L1=L2) and arranged in parallel, and two second creases 48 and 48' bilaterally equally spaced from the first creases 46 and 46' at distance L3:L4 (L3=L4) and arranged in parallel. The longitudinally extended middle part of the cover panel 40 forms a front cover portion 47 between the first creases 46 and 46'. The part of the cover panel 40 between the first creases 46 and 46' and the second creases 48 and 48' forms two parallel side cover portions 49 and 49'. The part of the cover panel 40 beyond the second creases 48 and 48' forms two back flap portions 42 and 42'. The two side cover portions 49 and 49' are folded backwards along the first creases 46 and 46' and received at the back side of the front cover portion 47, and then the back flap portions 42 and 42' are folded forwards along the second creases 48 and 48' and received at the back sides of the side cover portions 49 and 49', and then the upper part of the second creases 48 and 48' are stitched together, forming a stitched line 50." "[0024] Referring to FIGS. 4, 5, 9, 10 and 11, when the undergarment put on the user's body, the undergarment body 10 and the cover panel 20 or 40 are stretched outwards into a three-dimensional status. At this time, the elastic material property of the cover panel 20 or 40 produces components of force F in direction toward the imaginary straight line L between the waistband and the crotch, keeping the cover panel 20 or 40 closely attached to the lower part of the user's abdomen." "[0025] . . . When the user adjusted the undergarment to the best fit position, the cover panel 20 is forced by its elastic material property to cover the penis and to secure the penis to the inside of the penis receiving space 23. At the same time, the cover panel 20 supports the scrotum in the scrotum receiving space 24." "[0026] Further, the side cover portions 49 and 49' and back flap portions 42 and 42' of the cover panel 40 are gradually downwardly extended from the stitched line 50 toward two opposite lateral sides, showing a three-dimensional profile shaped like a water drop." "[0027] The elastic material property and the effect of the stitched line 50 cause the side cover portions 49 and 49' to hold the user's penis positively in the penis receiving space 53 in vertical, preventing the user's penis from falling to the outside of the cover panel 40. Because the three-dimensional profile of the cover panel 40 is shaped like a water drop, the cover panel 40 effectively covers and supports the user's scrotum." "[0028] The length of the stitched line 50 helps define the variation of the width of the cover panel 40, i.e., the water drop-like three-dimensional becomes relatively shorter when the stitched line 50 relatively prolonged, or relatively longer when the stitched line 50

Either Anticipation by U.S. Patent Publication No. 2004/0025218 (Published Feb. 12, 2004) or Obviousness In View of Andrew Christian Printed Publications and EP O 476 818 or the '369 Patent

Claim 1	Exemplary Disclosure in Prior Art
	relatively shortened. The length of the stitched line 50 is determined subject to the size and style of the undergarment. Basically, the water drop-like three-dimensional profile of the cover panel 40 fits the genitals of a matured man."

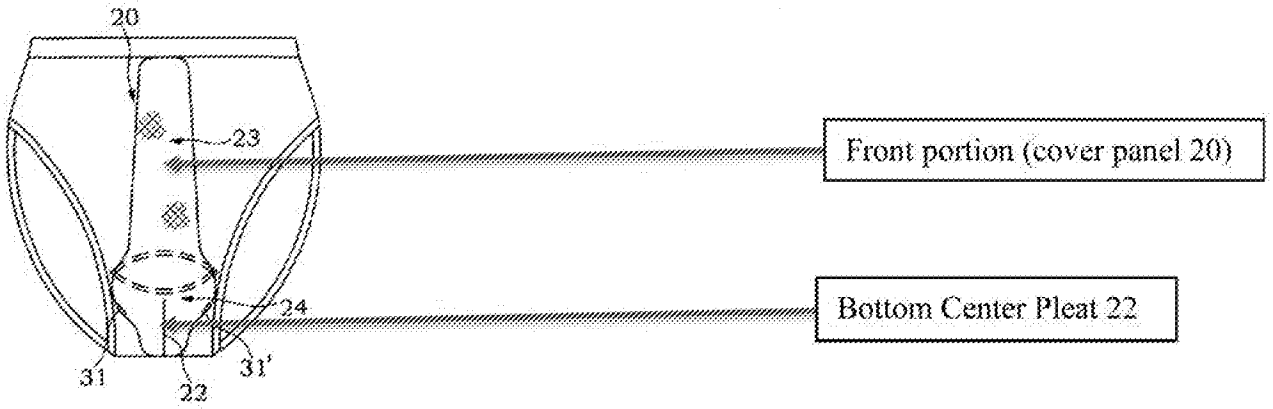

Fig.3

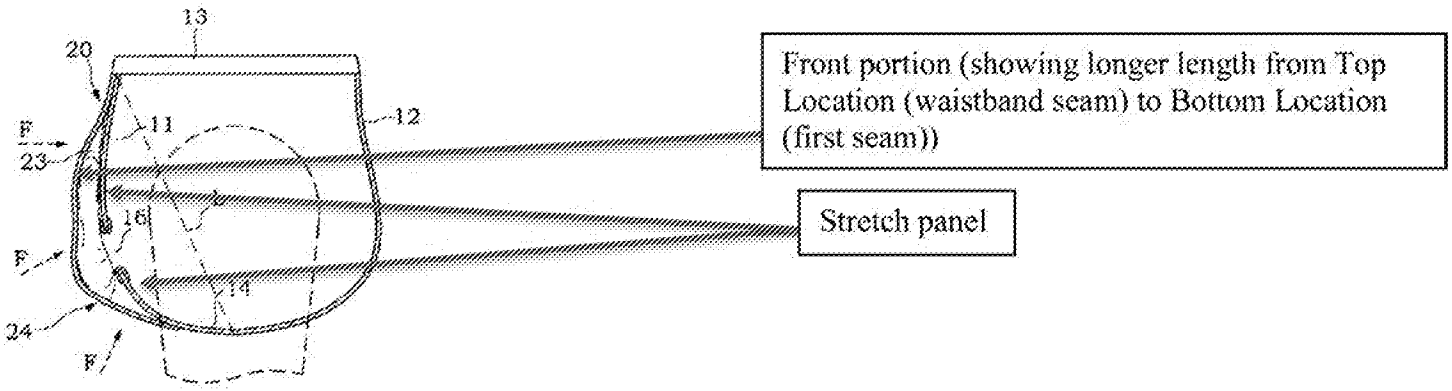

Fig.5

Either Anticipation by U.S. Patent Publication No. 2004/0025218 (Published Feb. 12, 2004) or Obviousness In View of Andrew Christian Printed Publications and EP O 476 818 or the '369 Patent

Claim 1	Exemplary Disclosure in Prior Art
	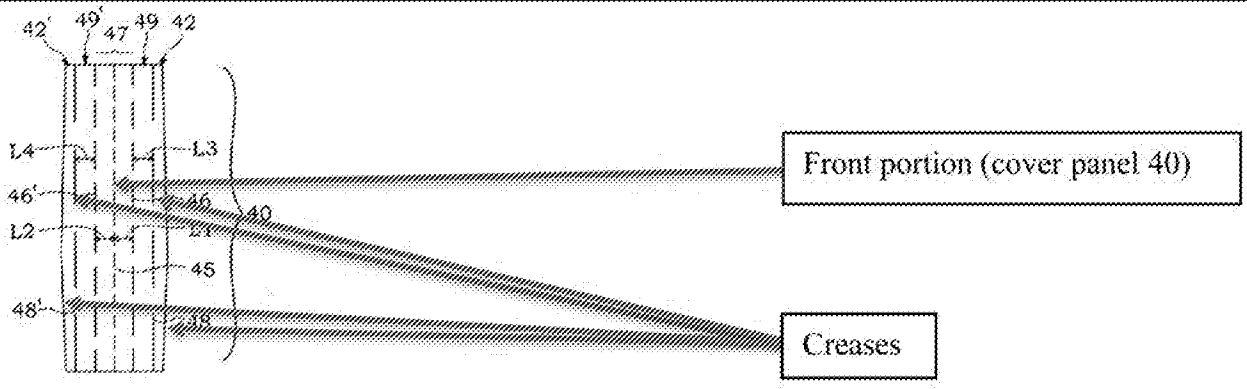 Fig.6

Either Anticipation by U.S. Patent Publication No. 2004/0025218 (Published Feb. 12, 2004) or Obviousness In View of Andrew Christian Printed Publications and EP O 476 818 or the '369 Patent

Claim 1	Exemplary Disclosure in Prior Art
	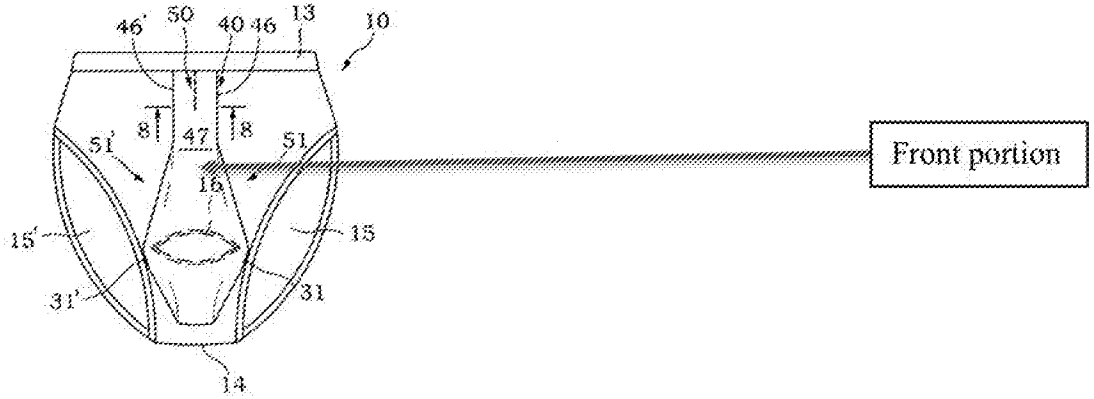 Fig.7 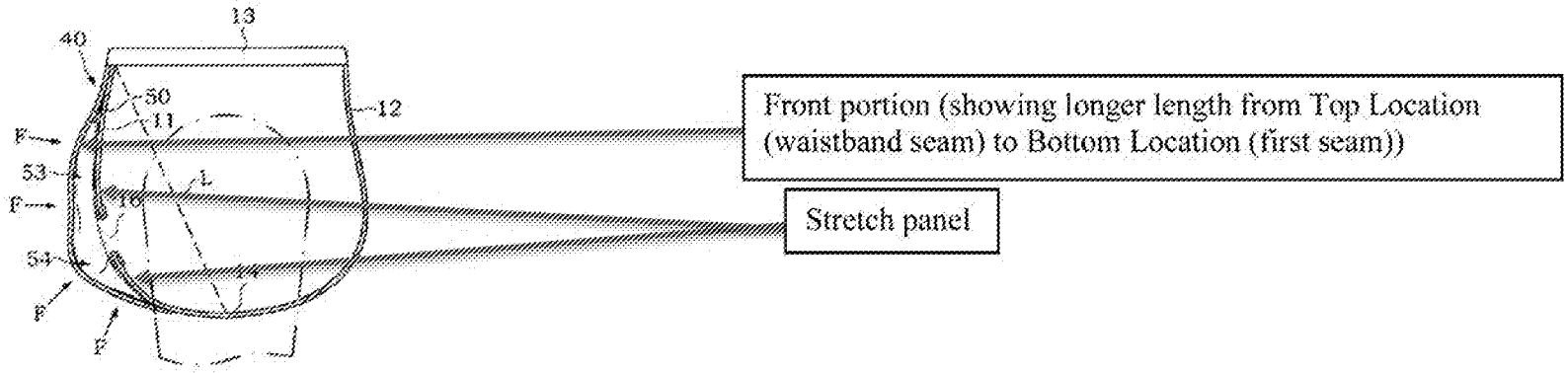 Fig.11

Claim 1	Exemplary Disclosure in Prior Art
	Furthermore, the 9132 Show-It Brief includes a stretch panel having a length when unstretched smaller than a length measured along the front portion between the top and bottom locations and a width when unstretched smaller than a width measured along the front portion between the side seams. ***See,*** In the below screenshot from the ACI000040 publication, one can see that the "front portion" of the 9132 Show-It Brief extends forward from the "stretch panel" (the "comfy cup"), and therefore must be longer than the "stretch panel" ("comfy cup"). As such, the "stretch panel" ("comfy cup") must have a length when unstretched smaller than a length measured along the front portion between the top and bottom locations and a width when unstretched smaller than a width measured along the front portion between the side seams, as the "front portion" and "stretch panel" (the "comfy cup") of the 9132 Show-It Brief are attached along the waistband seam (top location), a bottom seam (bottom location), and the side seams extending from the waistband seam to the first seam. 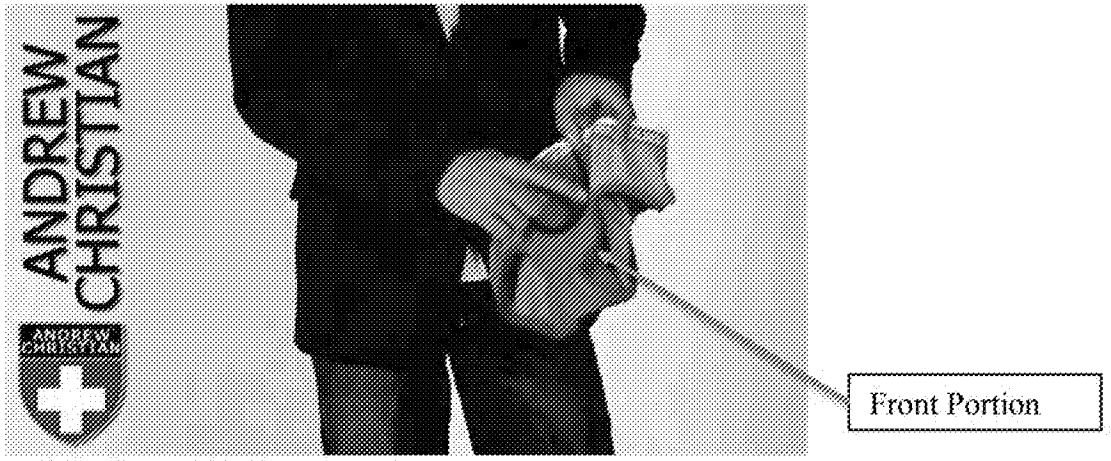 ACI000040 at 00:28. The Show-It 2009-2010 Catalog discloses that the 9132 Show-It Brief includes a "lifting pocket" and depicts the lifting pocket as having a front portion that is longer in length from the top location to the bottom location than the stretch panel ("comfy cup") as shown below. On information and belief, the depicted stretch panel must have a length when unstretched smaller than a length measured along the front portion between the top and bottom locations and a width when unstretched smaller than a width measured along the front portion between the side seams

Claim 1	Exemplary Disclosure in Prior Art
	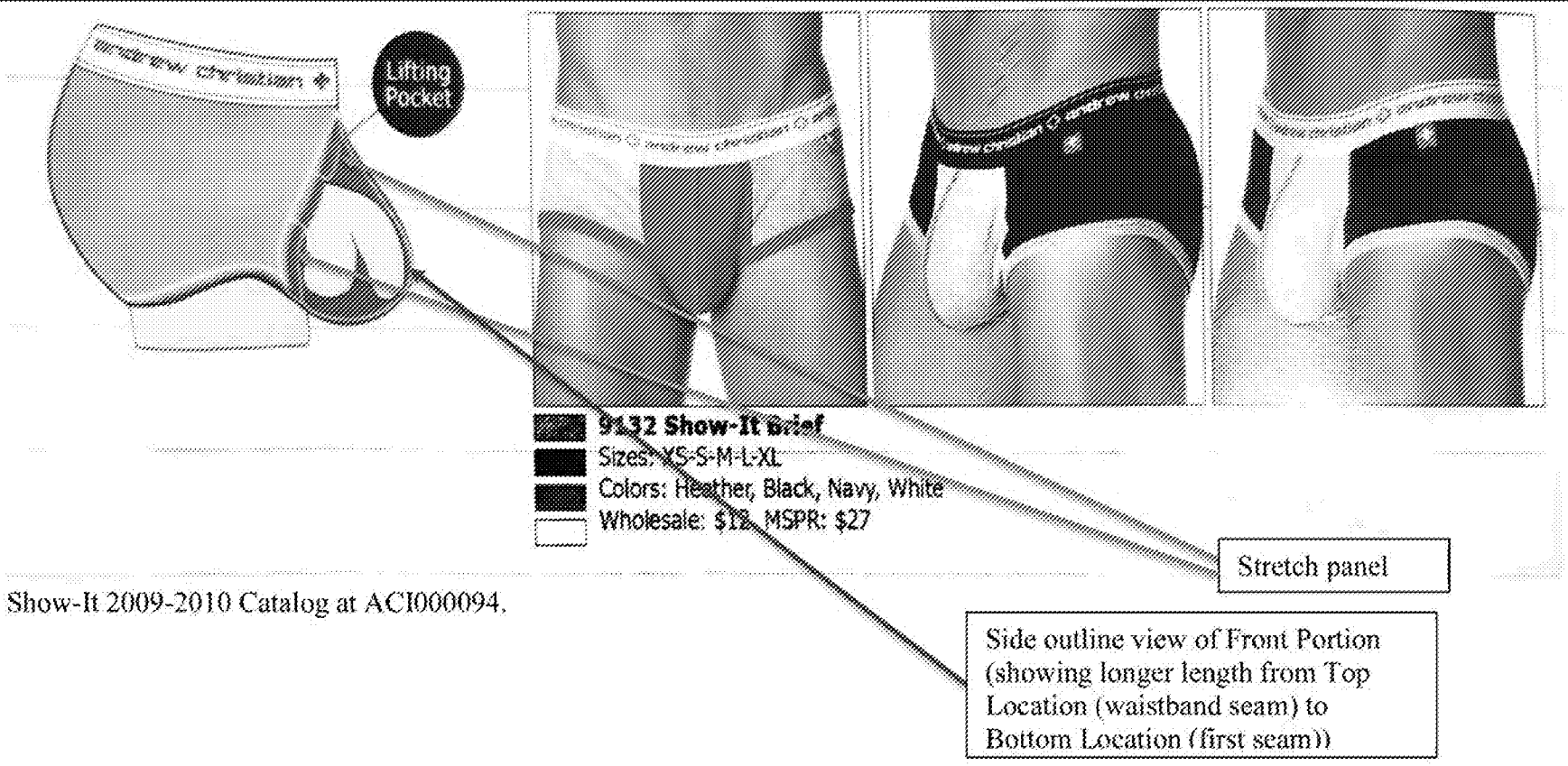 Show-It 2009-2010 Catalog at ACI000094. To the extent Plaintiffs contend the ACI000040 publication or the Show-It 2009-2010 Catalog, do not expressly, implicitly, or inherently disclose that the 9132 Show-It Brief includes a stretch panel having a length when unstretched smaller than a length measured along the front portion between the top and bottom locations and a width when unstretched smaller than a width measured along the front portion between the side seams, one of ordinary skill in the art would, based on one's knowledge and the disclosure of the ACI000040 publication or the Show-It 2009-2010 Catalog, understand how to modify 9132 Show-It Brief to meet this limitation.

Claim 1	Exemplary Disclosure in Prior Art
	The 9133 Show-It Boxer includes a stretch panel having a length when unstretched smaller than a length measured along the front portion between the top and bottom locations and a width when unstretched smaller than a width measured along the front portion between the side seams. ***See,*** The Show-It 2009 Line Sheet at ACI000092 discloses that the 9133 Show-It Boxer utilizes the same "Show-It Technology 2.0" utilized in the 9132 Show-It Brief. *See* Show-It 2009 Line Sheet at ACI000092, depicting both the 9132 Show-It Brief and the 9133 Show-It Boxer and describing "Show-It™ with Show-It Technology 2.0" with "our comfy cup." On information and belief, an inside view of the 9133 Show-It Boxer would show a "comfy cup" (that is, a Stretch Panel) inside the Front Portion as shown above in the ACI000040 publication at 00:28 and the Show-It 2009-2010 Catalog at ACI000094. 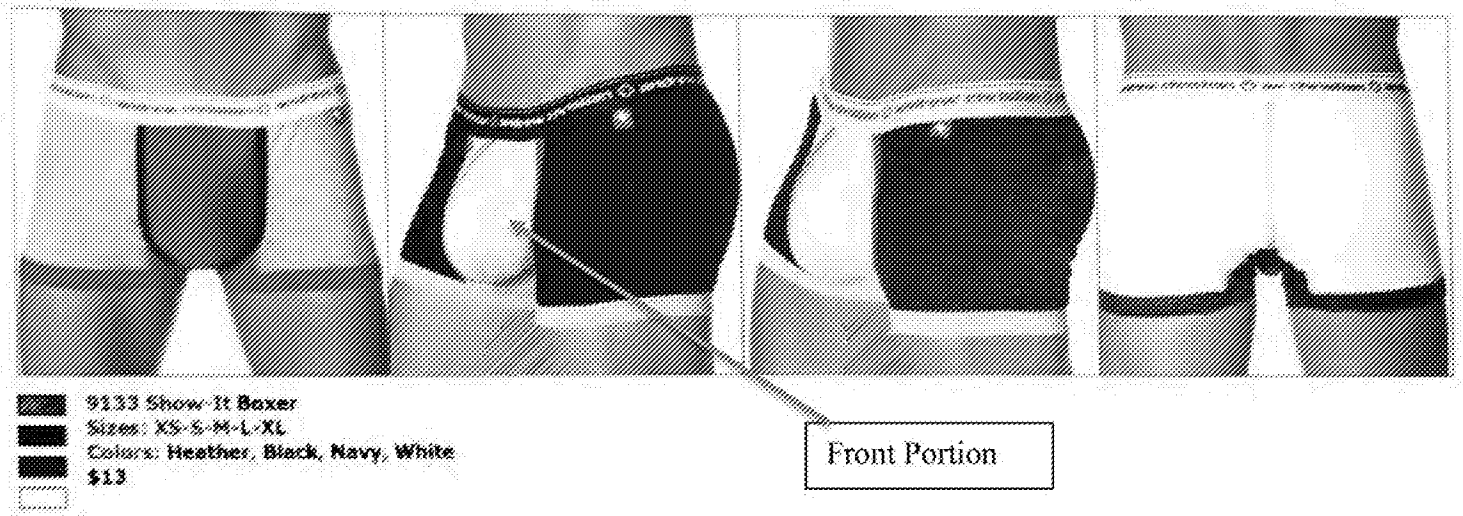 Show-It 2009 Line Sheet at ACI000092 As depicted in the Show-It 2009 Line Sheet at ACI000092, the "front portion" of the 9133 Show-It Boxer extends forward from the "stretch panel" (the "comfy cup"), and therefore must be longer than the "stretch panel" ("comfy cup"). As such, the "stretch panel" ("comfy cup") must have a length when unstretched smaller than a length measured along the front portion between the top and bottom locations and a width when unstretched smaller than a width measured along the front portion between the side seams, as the

Claim 1	Exemplary Disclosure in Prior Art
	"front portion" and "stretch panel" (the "comfy cup") of the 9133 Show-It Boxer are attached along the waistband seam (top location), a bottom seam (bottom location), and the side seams extending from the waistband seam to the first seam. To the extent Plaintiffs contend the Show-It 2009 Line Sheet or the ACI000040 publication does not expressly, implicitly, or inherently disclose that the 9133 Show-It Boxer includes a stretch panel having a length when unstretched smaller than a length measured along the front portion between the top and bottom locations and a width when unstretched smaller than a width measured along the front portion between the side seams, one of ordinary skill in the art would, based on one's knowledge and the disclosure of the Show-It 2009 Line Sheet or the ACI000040 publication, understand how to modify 9133 Show-It Boxer to meet this limitation. To the extent Plaintiffs contend the '218 Publication does not expressly, implicitly, or inherently disclose a stretch panel having a length when unstretched smaller than a length measured along the front portion between the top and bottom locations and a width when unstretched smaller than a width measured along the front portion between the side seams, one of ordinary skill in the art would, based on one's knowledge and the '218 Publication, understand how to modify '218 Publication to meet this limitation. Alternatively, one of ordinary skill could modify the '218 Publication in view of the Show-It 2009-2010 Catalog, the Show-It 2009 Line Sheet and/or the ACI000040 publication (disclosure above) to meet this limitation.
[1.4c] such that the front portion is gathered from side-to-side and top-to-bottom by the stretch panel and defines a three-dimensional pouch	**The front portion of the '218 Publication defines a three-dimensional pouch between the stretch panel and the front portion for receiving and holding the wearer's genitals.** ***See,*** In particular, the '218 Publication discloses a cover panel (the front portion) that creates a three-dimensional pouch with the stretch panel, as described in 1.3, above. The pouch ("a concave space") is comprised of the "penis receiving space 23 or 53" and the "scrotum receiving space 24 or 54." The pouch is for receiving the wearer's penis and scrotum (genitals). Furthermore, the front portion's center pleat further discloses this limitation, as do the creases in an alternative embodiment's front portion. "[0021] . . . The cover panel is made of a piece of elastic, ventilating cloth (cotton cloth or spandex- contained meshed cloth), having top and bottom ends respectively fixedly fastened to the waistband 13 and the crotch 14." "[0022] When fastened to the undergarment body 10, the upper part of the cover panel 20 defines with the undergarment body 10 a penis receiving space 23 above the opening 16 (see also FIG. 1) for receiving the user's penis, and the side flaps 21 and 21' define with the undergarment body 10a scrotum receiving space 24 below the opening 16 for receiving the user's scrotum. Further, because of the

Claim 1	Exemplary Disclosure in Prior Art
between the stretch panel and the front portion for receiving the wearer's genitals and holding the wearer's genitals while the garment is being worn.	effect of the bottom center pleat 22, the lower part of the cover panel 20 protrudes forwards from the undergarment body 10, forming a three-dimensional status." "[0023] FIGS. 6-11 show a men's undergarment according to the second embodiment of the present invention. According to this alternate form, the cover panel 40 has a longitudinal center axis 45, two first creases 46 and 46' bilaterally equally spaced from the longitudinal center axis 45 at distance L1;L2 (L1=L2) and arranged in parallel, and two second creases 48 and 48' bilaterally equally spaced from the first creases 46 and 46' at distance L3;L4 (L3=L4) and arranged in parallel. The longitudinally extended middle part of the cover panel 40 forms a front cover portion 47 between the first creases 46 and 46'. The part of the cover panel 40 between the first creases 46 and 46' and the second creases 48 and 48' forms two parallel side cover portions 49 and 49'. The part of the cover panel 40 beyond the second creases 48 and 48' forms two back flap portions 42 and 42'. The two side cover portions 49 and 49' are folded backwards along the first creases 46 and 46' and received at the back side of the front cover portion 47, and then the back flap portions 42 and 42' are folded forwards along the second creases 48 and 48' and received at the back sides of the side cover portions 49 and 49', and then the upper part of the second creases 48 and 48' are stitched together, forming a stitched line 50." "[0024] Referring to FIGS. 4, 5, 9, 10 and 11, when the undergarment put on the user's body, the undergarment body 10 and the cover panel 20 or 40 are stretched outwards into a three-dimensional status. At this time, the elastic material property of the cover panel 20 or 40 produces components of force F in direction toward the imaginary straight line L between the waistband and the crotch, keeping the cover panel 20 or 40 closely attached to the lower part of the user's abdomen." "[0025] . . . When the user adjusted the undergarment to the best fit position, the cover panel 20 is forced by its elastic material property to cover the penis and to secure the penis to the inside of the penis receiving space 23. At the same time, the cover panel 20 supports the scrotum in the scrotum receiving space 24." "[0026] Further, the side cover portions 49 and 49' and back flap portions 42 and 42' of the cover panel 40 are gradually downwardly extended from the stitched line 50 toward two opposite lateral sides, showing a three-dimensional profile shaped like a water drop." "[0027] The elastic material property and the effect of the stitched line 50 cause the side cover portions 49 and 49' to hold the user's penis positively in the penis receiving space 53 in vertical, preventing the user's penis from falling to the outside of the cover panel 40. Because the three-dimensional profile of the cover panel 40 is shaped like a water drop, the cover panel 40 effectively covers and supports the user's scrotum."

Either Anticipation by U.S. Patent Publication No. 2004/0025218 (Published Feb. 12, 2004) or Obviousness In View of Andrew Christian Printed Publications and EP O 476 818 or the '369 Patent

Claim 1	Exemplary Disclosure in Prior Art
	"[0028] The length of the stitched line 50 helps define the variation of the width of the cover panel 40, i.e., the water drop-like three-dimensional becomes relatively shorter when the stitched line 50 relatively prolonged, or relatively longer when the stitched line 50 relatively shortened. The length of the stitched line 50 is determined subject to the size and style of the undergarment. Basically, the water drop-like three-dimensional profile of the cover panel 40 fits the genitals of a matured man." 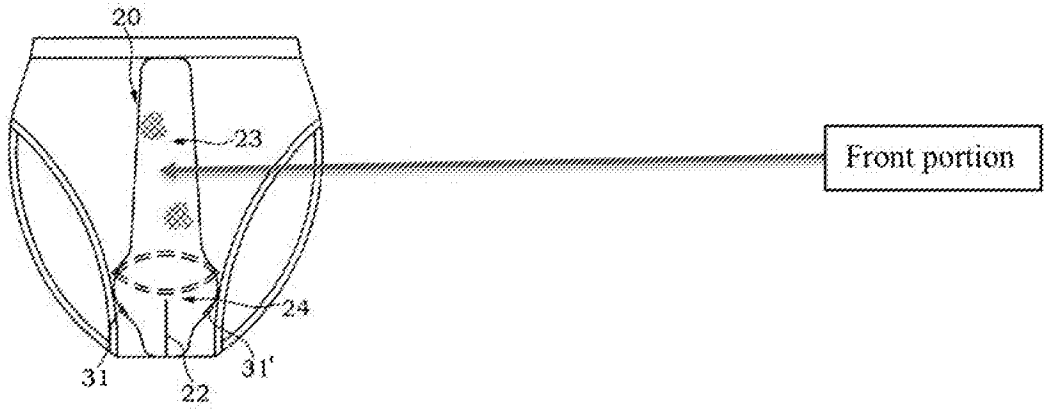 Fig.3

Either Anticipation by U.S. Patent Publication No. 2004/0025218 (Published Feb. 12, 2004) or Obviousness In View of Andrew Christian Printed Publications and EP O 476 818 or the '369 Patent

Claim 1	Exemplary Disclosure in Prior Art
	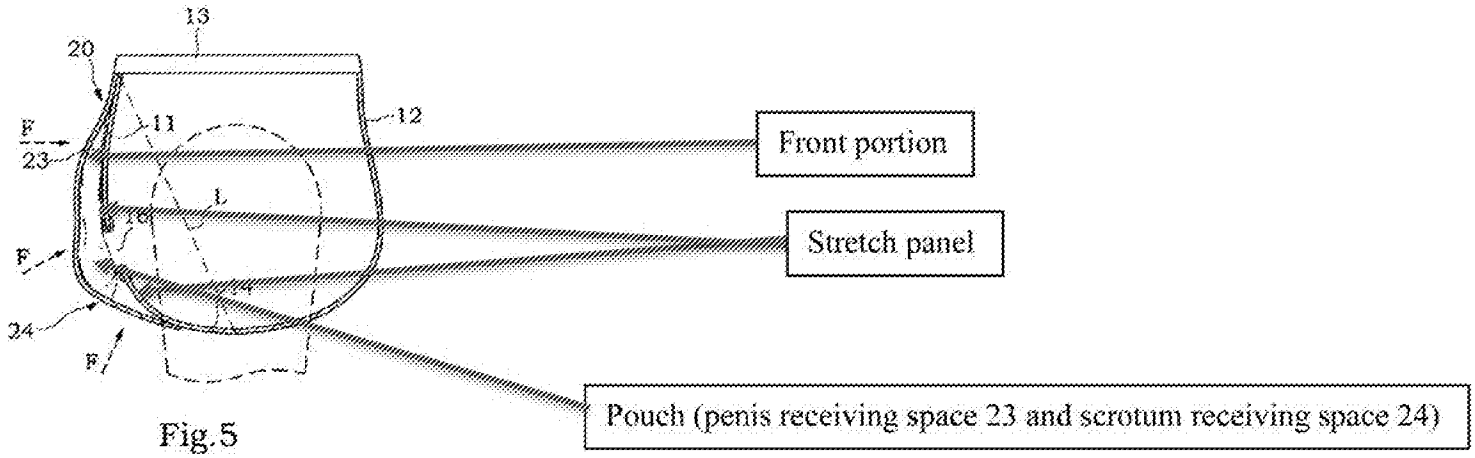 Fig.5

Either Anticipation by U.S. Patent Publication No. 2004/0025218 (Published Feb. 12, 2004) or Obviousness In View of Andrew Christian Printed Publications and EP O 476 818 or the '369 Patent

Claim 1	Exemplary Disclosure in Prior Art
	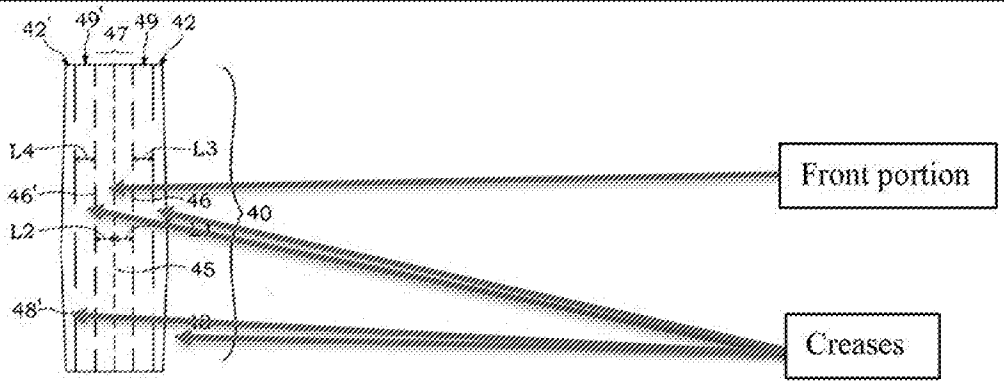 Fig.6

Either Anticipation by U.S. Patent Publication No. 2004/0025218 (Published Feb. 12, 2004) or Obviousness In View of Andrew Christian Printed Publications and EP O 476 818 or the '369 Patent

Claim 1	Exemplary Disclosure in Prior Art
	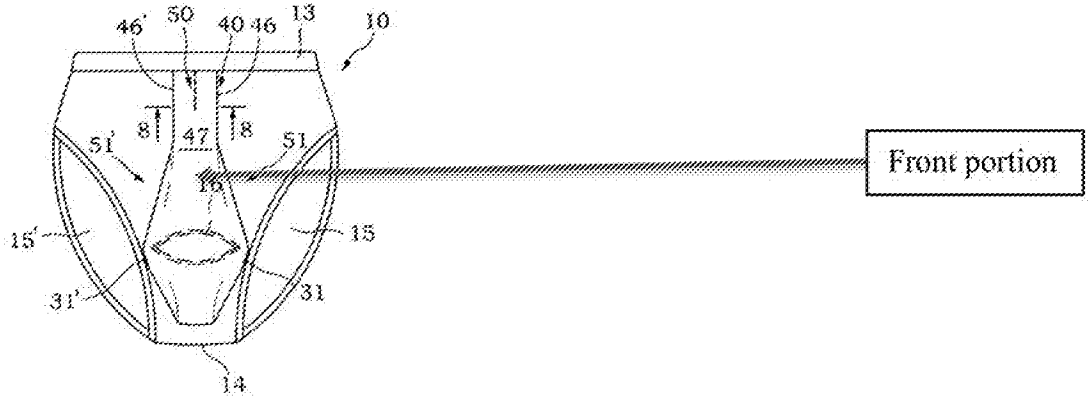 Fig.7 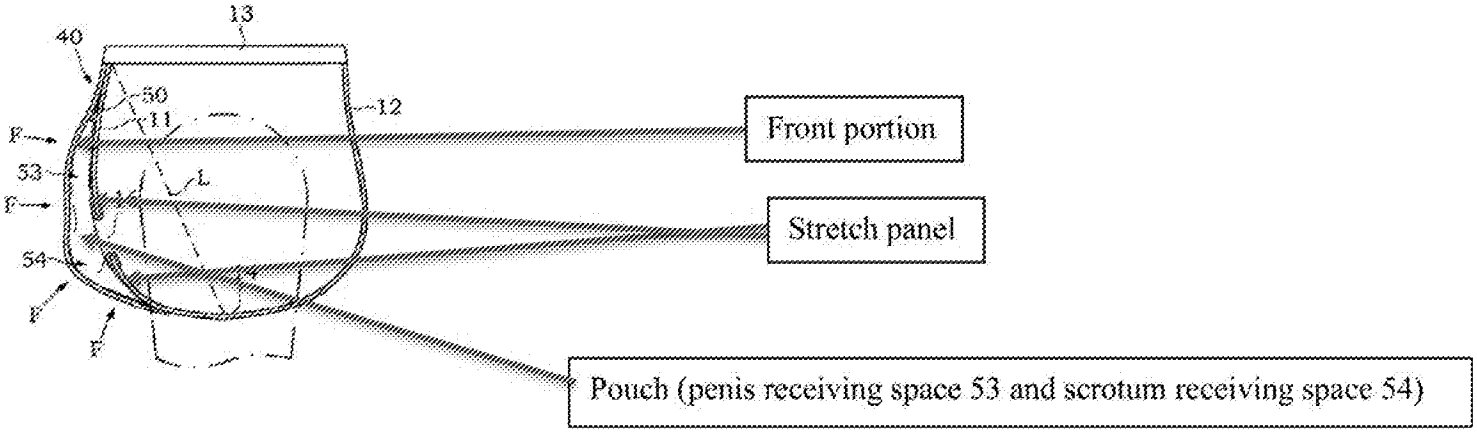 Fig.11 To the extent Plaintiffs contend the '218 Publication does not expressly, implicitly, or inherently disclose that the front portion is gathered from side-to-side and top-to-bottom by the stretch panel and defines a three-dimensional pouch between the stretch panel and

Claim 1	Exemplary Disclosure in Prior Art
	the front portion, one of ordinary skill in the art would, based on one's knowledge and the '218 Publication, understand how to modify the disclosure of the '218 Publication to meet this limitation. Alternatively, one of ordinary skill could modify the '218 Publication in view of the Show-It 2009-2010 Catalog, the Show-It 2009 Line Sheet, ACI000038 publication, and/or the ACI000040 publication (disclosure below) to meet this limitation. **The front portion of the 9132 Show-It Brief is gathered from side to side and top to bottom by the stretch panel and defines a three-dimensional pouch between the stretch panel and the front portion for receiving and holding the wearer's genitals while the garment is being worn.** The Show-It 2009-2010 Catalog depicts the 9132 Show-It Brief having a three-dimensional pouch ("a concave space") between the Stretch Panel ("comfy cup") and the front portion and shows the three-dimensional pouch holding a wearer's genitals.

Either Anticipation by U.S. Patent Publication No. 2004/0025218 (Published Feb. 12, 2004) or Obviousness In View of Andrew Christian Printed Publications and EP O 476 818 or the '369 Patent

Claim 1	Exemplary Disclosure in Prior Art
	 Show-It 2009-2010 Catalog at ACI000094. Three Dimensional Pouch (a concave space) behind Front Portion (can see three-dimensional nature of Pouch inside Front Portion in right three pictures) – the Pouch is receiving and holding the wearer genitals while the 9132 Show-It Brief is being worn The Show-It 2009 Line Sheet at ACI000092 also teaches that the 9132 Show-It Brief has a three-dimensional pouch ("a concave space") ("Contrasting pouch accentuates front.") The following screenshots from the ACI000038 publication and the ACI000040 publication show gathering of the "front portion" along each of the side seams and the waistband seam. The gathering of the "front portion" along the first seam is not visible, as the first seam is hidden by the pouch of the 9132 Show-It Brief and the legs of the wearer.

Either Anticipation by U.S. Patent Publication No. 2004/0025218 (Published Feb. 12, 2004) or Obviousness In View of Andrew Christian Printed Publications and EP O 476 818 or the '369 Patent

Claim 1	Exemplary Disclosure in Prior Art
	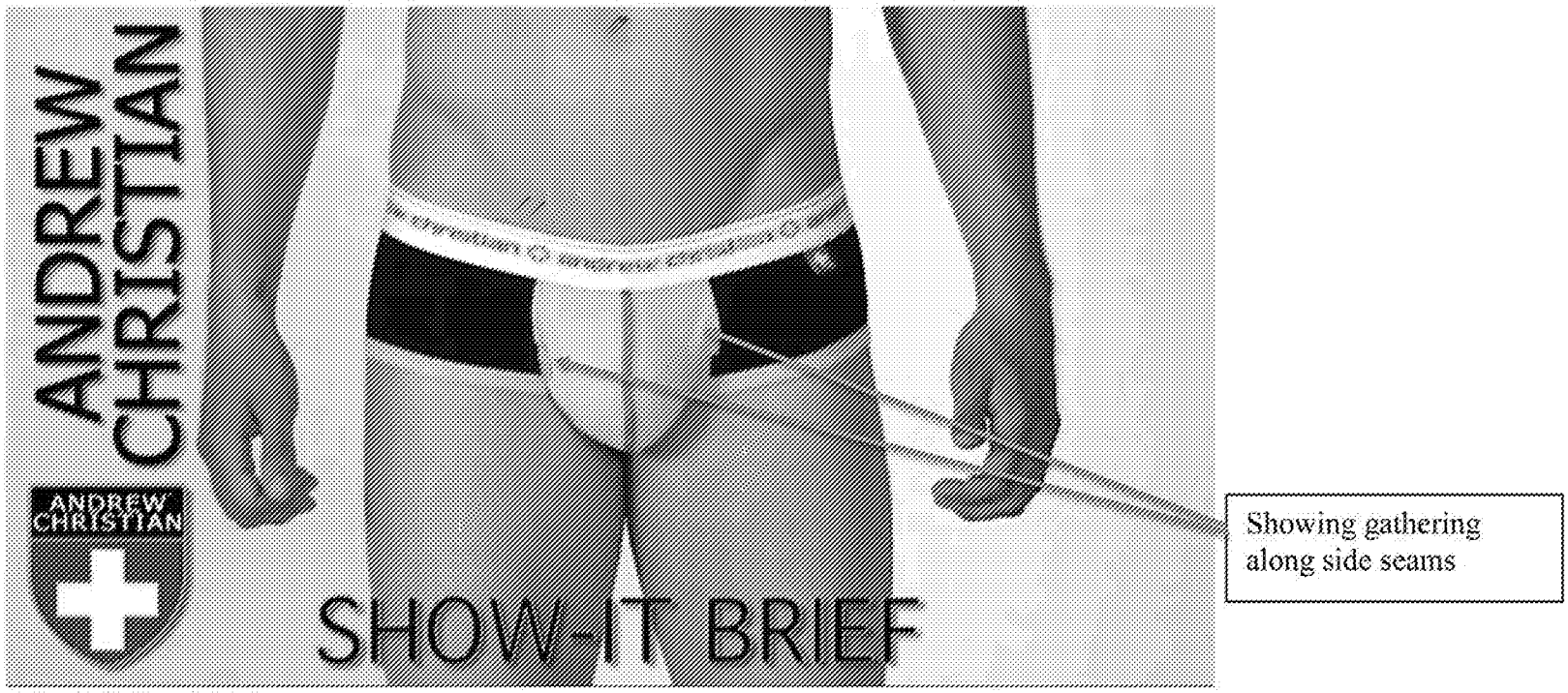 ACI000040 at 00:10.

Claim 1	Exemplary Disclosure in Prior Art
	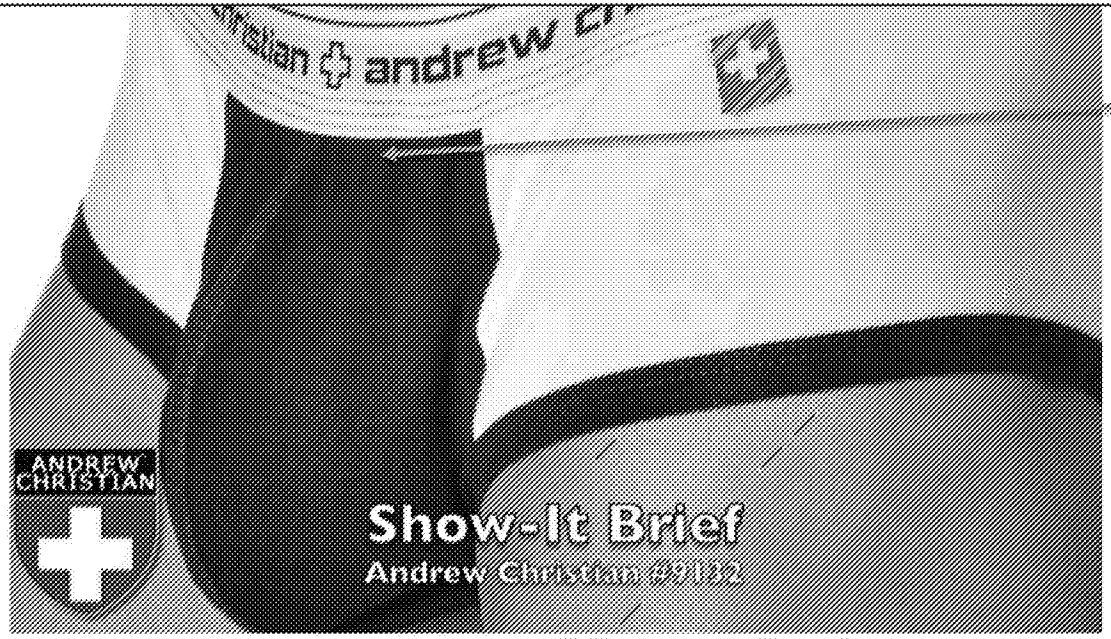 Showing gathering along waistband seam AC000038 at 4:02. To the extent Plaintiffs contend the Show-It 2009 Line Sheet, the Show-It 2009-2010 Catalog, the ACI000038 publication, or the ACI000040 publication does not expressly, implicitly, or inherently disclose that the front portion is gathered from side-to-side and top-to-bottom by the stretch panel and defines a three-dimensional pouch between the stretch panel and the front portion for receiving the wearer's genitals and holding the wearer's genitals while the garment is being worn, one of ordinary skill in the art would, based on one's knowledge and the disclosure in the Show-It 2009 Line Sheet, the Show-It 2009-2010 Catalog, the ACI000038 publication, or the ACI000040 publication, understand how to modify the 9132 Show-It Brief to meet this limitation. **The front portion of the 9133 Show-It Boxer is gathered from side to side and top to bottom by the stretch panel and defines a three-dimensional pouch between the stretch panel and the front portion for receiving and holding the wearer's genitals while the garment is being worn.**

Claim 1	Exemplary Disclosure in Prior Art
	See Show-It 2009 Line Sheet at ACI000092, depicting both the 9132 Show-It Brief and the 9133 Show-It Boxer and describing "Show-It™ with Show-It Technology 2.0" with "contrasting pouch [that] accentuates front." 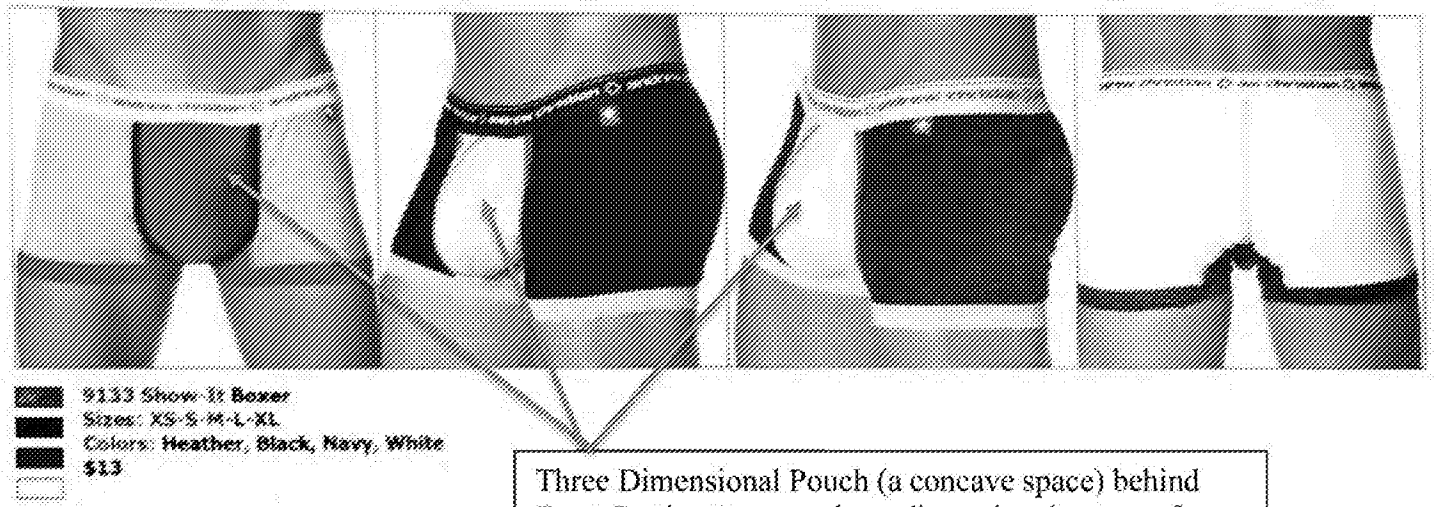 *Id.* The following screenshots from the ACI000038 publication show gathering of the "front portion" along one side seam and the waistband seam. The gathering of the "front portion" along the other side seam is not visible, based on the orientation in the screenshot, and the gathering of the "front portion" along the first seam is not visible, as the first seam is hidden by the pouch of the 9133 Show-It Boxer and the legs of the wearer.

Either Anticipation by U.S. Patent Publication No. 2004/0025218 (Published Feb. 12, 2004) or Obviousness In View of Andrew Christian Printed Publications and EP O 476 818 or the '369 Patent

Claim 1	Exemplary Disclosure in Prior Art
	 Showing gathering along waistband seam ACI000038 at 2:52.

Claim 1	Exemplary Disclosure in Prior Art
	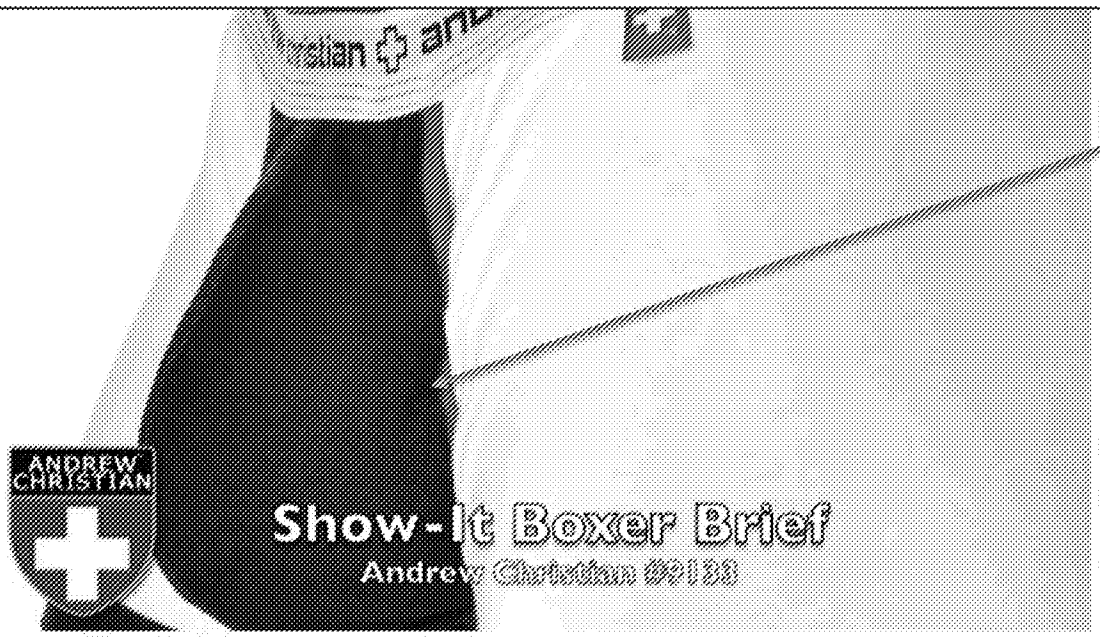 ACI000038 at 3:05. To the extent Plaintiffs contend the ACI000038 publication or the Show-It 2009 Line Sheet does not expressly, implicitly, or inherently disclose that the front portion of the 9133 Show-It Boxer is gathered from side-to-side and top-to-bottom by the stretch panel and defines a three-dimensional pouch between the stretch panel and the front portion for receiving the wearer's genitals and holding the wearer's genitals while the garment is being worn, one of ordinary skill in the art would, based on one's knowledge and the disclosure in the ACI000038 publication or the Show-It 2009 Line Sheet, understand how to modify 9133 Show-It Boxer to meet this limitation. To the extent Plaintiffs contend the '218 Publication, alone or in combination with the 9132 Show-It Brief/9133 Show-It Boxer, does not expressly, implicitly, or inherently disclose that the front portion is gathered from side-to-side and top-to-bottom by the stretch panel and defines a three-dimensional pouch between the stretch panel and the front portion for receiving the wearer's genitals and holding the wearer's genitals while the garment is being worn, one of ordinary skill in the art would, based on one's knowledge and the '218 Publication, alone or in combination with the 9132 Show-It Brief/9133 Show-It Boxer, understand how to modify the '218

Claim 1	Exemplary Disclosure in Prior Art
	Publication, alone or in combination with the Show-It 2009-2010 Catalog, the Show-It 2009 Line Sheet, the ACI000038 publication, and/or the ACI000040 publication to meet this limitation. Specifically, one of ordinary skill in the art would understand how to make a garment wherein the front portion is gathered from side-to-side and top-to-bottom by the stretch panel, wherein the stretch panel has a length when unstretched smaller than a length measured along the front portion between the top and bottom locations and a width when unstretched smaller than a width measured along the front portion between the side seams. **For example, EP O 476 818 teaches a method of gathering from side-to-side and top-to-bottom by an elastic fabric.** *See*, "The garment now has a waist opening 31 and in accordance with the present invention, an elasticated band 32 is secured in face to face contact to a marginal portion 33 of the garment surrounding the waist opening 31. The band 32 is secured to the garment whilst in a tensioned condition (i.e. stretched condition) so that on relaxation, the fabric of the marginal portion 33 is ruched thereby enabling the band to stretch when the garment is being worn." (4:4-12) "The operative inserts the garment over the band, drops the presser foot 56, sews a pre-set number of stitches, typically two or three, after which the roller 59 drops automatically, and the metering device 62 automatically reverses to apply the pre-programmed tension to the band so that the ruched effect can be achieved." (6:47-53)

Claim 2	Exemplary Disclosure in Prior Art
[2] A garment according to claim 1 wherein the stretch panel has asymmetrical stretch characteristics such that the stretch panel stretches more easily in a direction parallel to the waistband and less easily in a direction at right angles to the waistband.	The obviousness combinations asserted and disclosed in this chart for claim 2 are as follows: • '218 Publication in view of Andrew Christian printed publications • '218 Publication in view of Andrew Christian printed publications in further view of EP O 476 818 • '218 Publication in view of Andrew Christian printed publications in further view of the '369 Patent See above regarding claim 1. The Court has construed "asymmetrical stretch characteristics" as "a property wherein the degree of stretch produced when force is applied in one direction differs from the degree of stretch produced when the same amount of force is applied in a direction at right angles to the first direction."

Claim 2	Exemplary Disclosure in Prior Art
	The '218 Publication discloses a garment wherein the stretch panel has a property wherein the degree of stretch produced when force is applied in one direction differs from the degree of stretch produced when the same amount of force is applied in a direction at right angles to the first direction such that the stretch panel stretches more easily in a direction parallel to the waistband and less easily in a direction at right angles to the waistband. ***See,*** In particular, the only material disclosed by the '218 Publication is an elastically resilient four-way stretch material, as discussed in 1.3, above. "[0021] . . . The cover panel is made of a piece of elastic, ventilating cloth (cotton cloth or spandex- contained meshed cloth), having top and bottom ends respectively fixedly fastened to the waistband 13 and the crotch 14." "[0024] Referring to FIGS. 4, 5, 9, 10 and 11, when the undergarment put on the user's body, the undergarment body 10 and the cover panel 20 or 40 are stretched outwards into a three-dimensional status. At this time, the elastic material property of the cover panel 20 or 40 produces components of force F in direction toward the imaginary straight line L between the waistband and the crotch, keeping the cover panel 20 or 40 closely attached to the lower part of the user's abdomen."

Either Anticipation by U.S. Patent Publication No. 2004/0025218 (Published Feb. 12, 2004) or Obviousness In View of Andrew Christian Printed Publications and EP O 476 818 or the '369 Patent

Claim 2	Exemplary Disclosure in Prior Art
	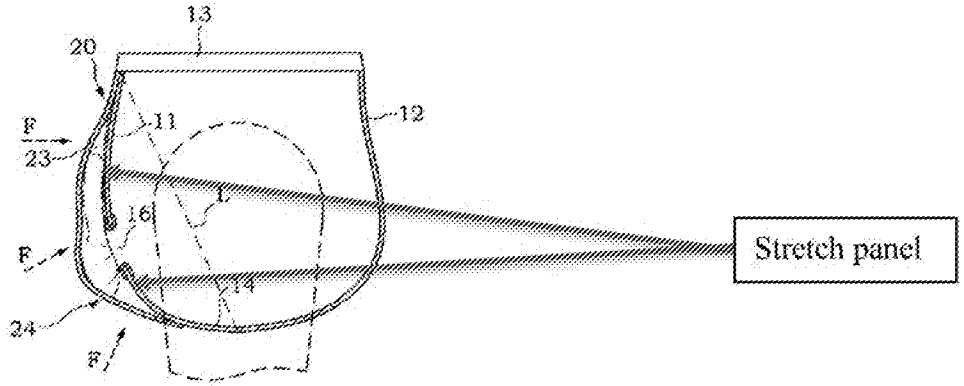 Fig.5 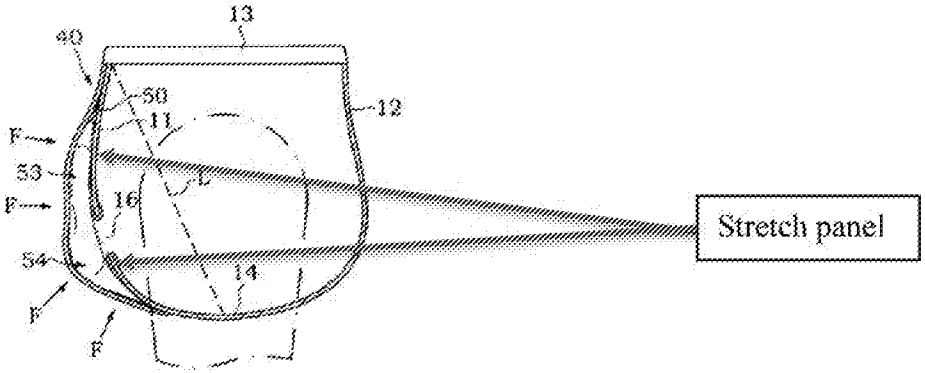 Fig. 11

Claim 2	Exemplary Disclosure in Prior Art
	To the extent Plaintiffs contend the '218 Publication does not expressly, implicitly, or inherently disclose a garment wherein the stretch panel has asymmetrical stretch characteristics such that the stretch panel stretches more easily in a direction parallel to the waistband and less easily in a direction at right angles to the waistband, one of ordinary skill in the art would, based on one's knowledge and the '218 Publication, understand how to modify the disclosure of the '218 Publication to meet this limitation. Alternatively, one of ordinary skill could modify the '218 Publication in view of the 9132 Show-It Brief/9132 Show-It Boxer and/or the '369 Patent to meet this limitation. **The 9132 Show-It Brief is a garment wherein the stretch panel has a property wherein the degree of stretch produced when force is applied in one direction differs from the degree of stretch produced when the same amount of force is applied in a direction at right angles to the first direction such that the stretch panel stretches more easily in a direction parallel to the waistband and less easily in a direction at right angles to the waistband.** ***See,*** In the screenshot from the ACI000040 publication below, Andrew Christian is demonstrating the elastically resilient four way stretch of the "comfy cup" (the Stretch Panel) by placing his hand through the opening of the Stretch Panel of the 9132 Show-It Brief and into the Pouch, as the "comfy cup" (the Stretch Panel) stretches in length (a direction between the top edge and bottom edge) and width (a direction between the side edges). The Stretch Panel appears to stretch more in a direction parallel to the waistband than in the direction at right angles to the waistband:

Claim 2	Exemplary Disclosure in Prior Art
	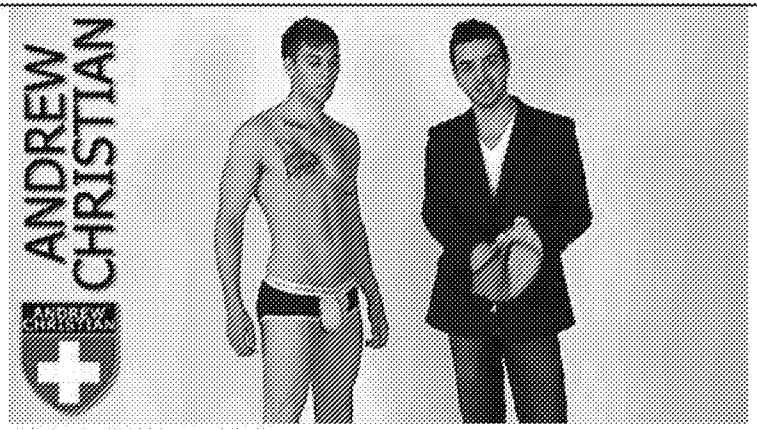 ACI000040 at 00:20. The Show-It 2009 Line Sheet at ACI000092 discloses that the 9132 Show-It Brief's "Comfy cup cradles and lifts." On information and belief, the Stretch Panel ("comfy cup") of the 9132 Show-It Brief must stretch more easily in the direction parallel to the waistband (to be able to accommodate the genitalia of the wearer) and must stretch less easily in a direction at right angles to the waist band (to be able to provide an upward force needed to "lift" the genitalia). To the extent Plaintiffs contend the ACI000040 publication or Show-It 2009 Line Sheet does not expressly, implicitly, or inherently disclose a garment wherein the stretch panel has asymmetrical stretch characteristics such that the stretch panel stretches more easily in a direction parallel to the waistband and less easily in a direction at right angles to the waistband, one of ordinary skill in the art would, based on one's knowledge and the disclosure of the ACI000040 publication or Show-It 2009 Line Sheet, understand how to modify the 9132 Show-It Brief to meet this limitation. **The 9133 Show-It Boxer is a garment wherein the stretch panel has a property wherein the degree of stretch produced when force is applied in one direction differs from the degree of stretch produced when the same amount of force is applied in a direction at right angles to the first direction such that the stretch panel stretches more easily in a direction parallel to the waistband and less easily in a direction at right angles to the waistband.** ***See,***

Claim 2	Exemplary Disclosure in Prior Art
	The Show-It 2009 Line Sheet at ACI000092 discloses that the 9133 Show-It Boxer utilizes the same "Show-It Technology 2.0" utilized in the 9132 Show-It Brief. *See* Show-It 2009 Line Sheet at ACI000092, depicting both the 9132 Show-It Brief and the 9133 Show-It Boxer and describing "Show-It™ with Show-It Technology 2.0" with "our comfy cup." On information and belief, the inside view of the 9133 Show-It Boxer would show a "comfy cup" (that is, a Stretch Panel) inside the Front Portion and having the same stretch characteristics as disclosed in the ACI000040 publication at 00:20 above. The Show-It 2009 Line Sheet at ACI000092 also discloses that the 9133 Show-It Boxer's "Comfy cup cradles and lifts." On information and belief, the Stretch Panel ("comfy cup") of the 9133 Show-It Boxer must stretch more easily in the direction parallel to the waistband (to be able to accommodate the genitalia of the wearer) and must stretch less easily in a direction at right angles to the waist band (to be able to provide an upward force needed to "lift" the genitalia). To the extent Plaintiffs contend the Show-It 2009 Line Sheet or the ACI000040 publication does not expressly, implicitly, or inherently disclose a garment wherein the stretch panel has asymmetrical stretch characteristics such that the stretch panel stretches more easily in a direction parallel to the waistband and less easily in a direction at right angles to the waistband, one of ordinary skill in the art would, based on one's knowledge and disclosure of the Show-It 2009 Line Sheet or the ACI000040 publication, understand how to modify the 9133 Show-It Boxer to meet this limitation. **The '369 Patent discloses a fabric with a property wherein the degree of stretch produced when force is applied in one direction differs from the degree of stretch produced when the same amount of force is applied in a direction at right angles to the first direction such that it stretches more easily in one direction and less easily in a direction at right angles to the first direction.** In particular, the '369 Patent discloses a warp knit, which has asymmetrical stretch characteristics. *See*, "With reference to FIG. 3, the warp knit is generally known in the art for having strands 26 running substantially parallel along a direction 27 of the fabric. Lateral threads 28 running substantially perpendicular to the strands 26 and in a direction 29 encircle sets of two strands 26 at once. Each adjacent lateral thread 28 encircles one of the two strands 26 in the first set and one of the two strands 26 from the second set. This pattern is repeated throughout. The

Claim 2	Exemplary Disclosure in Prior Art
	warp knit, by virtue of having parallel strands 26 along the direction 27 of the fabric, is resistant to stretch in the direction 27 when compared to other knitted fabrics, which may undesirably stretch. Thus, the warp knit fabric stretches less along the direction 27 than along the direction 29." (2:40-52) "The warp knit fabric used to form the groin portion 14 can stretch a relatively greater amount in the horizontal direction, roughly parallel to the waistband, than in the vertical direction. The ability to stretch in the horizontal direction allows for the accommodation of different sizes and shapes of male genitals. The groin portion stretches in the horizontal direction to accommodate the genitals of the supporter user while maintaining slight pressure on the genitals in the horizontal direction, thus aiding the cupping and compression functions of the supporter 10." (3:1-10) 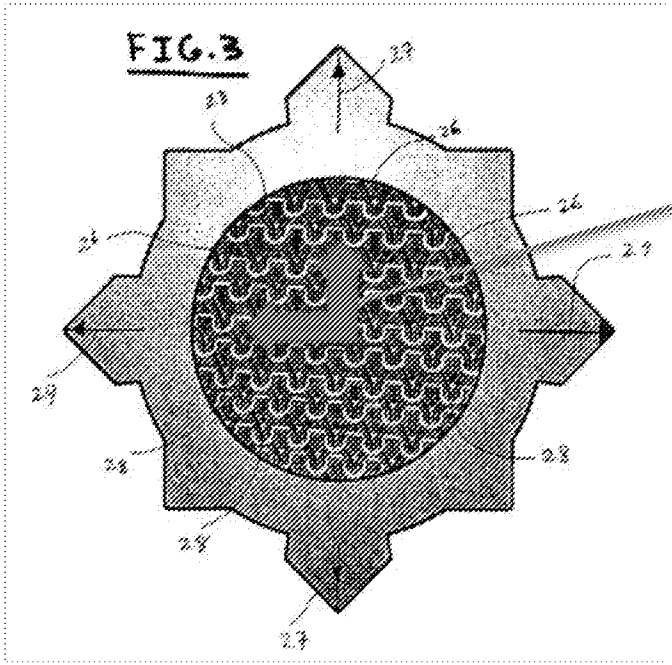 Direction 27 is at a right angle to Direction 29 (and vice versa). The "warp knit" (the fabric) stretches more easily in the horizontal direction, that is, Direction 29 (roughly parallel to the waistband), than in the vertical direction, that is, Direction 27 (roughly at a right angle to the waistband)

Claim 3	Exemplary Disclosure in Prior Art
[3] A garment according to claim 1 wherein the stretch panel is rectangular and the opening is U-shaped.	The obviousness combinations asserted and disclosed in this chart for claim 3 are as follows: • '218 Publication in view of Andrew Christian printed publications • '218 Publication in view of Andrew Christian printed publications in further view of EP O 476 818 See above regarding claim 1. The Court has construed rectangular as "having a shape with four corners wherein the lengths of the top and bottom edges are approximately equal to each other and the lengths of the left and right edges are approximately equal to each other." **The '218 Publication discloses a garment wherein the stretch panel has a shape with four corners wherein the lengths of the top and bottom edges are approximately equal to each other and the lengths of the left and right edges are approximately equal to each other and the opening is U-shaped.** *See*, 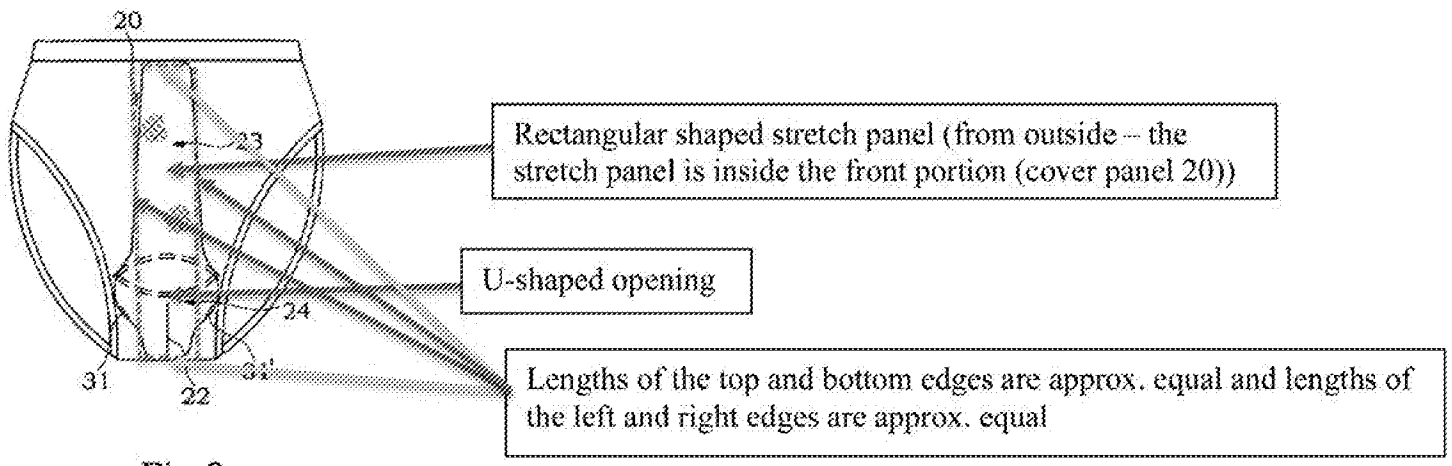 Fig.3

Claim 3	Exemplary Disclosure in Prior Art
	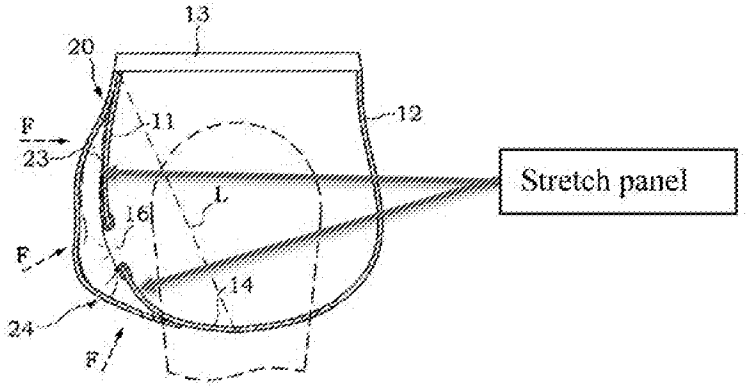 Fig.5 **Furthermore, the 9132 Show-It Brief is a garment wherein the stretch panel is a shape with four corners wherein the lengths of the top and bottom edges are approximately equal to each other and the lengths of the left and right edges are approximately equal to each other and the opening is U-shaped.** The ACI000040 publication shows that the 9132 Show-It Brief includes a stretch panel ("comfy cup") has top and bottom edges that are of approximately equal length to each other and opposing side edges that are of approximately equal length to each other.

Either Anticipation by U.S. Patent Publication No. 2004/0025218 (Published Feb. 12, 2004) or Obviousness In View of Andrew Christian Printed Publications and EP O 476 818 or the '369 Patent

Claim 3	Exemplary Disclosure in Prior Art
	 Top and Bottom Edges of Stretch Panel (at the Waistband Seam and First Seam, respectively) – approximately equal length to each other Side Edges of Stretch Panel – approximately equal length to each other Close up of ACI000040 at 00:14.

Claim 3	Exemplary Disclosure in Prior Art
	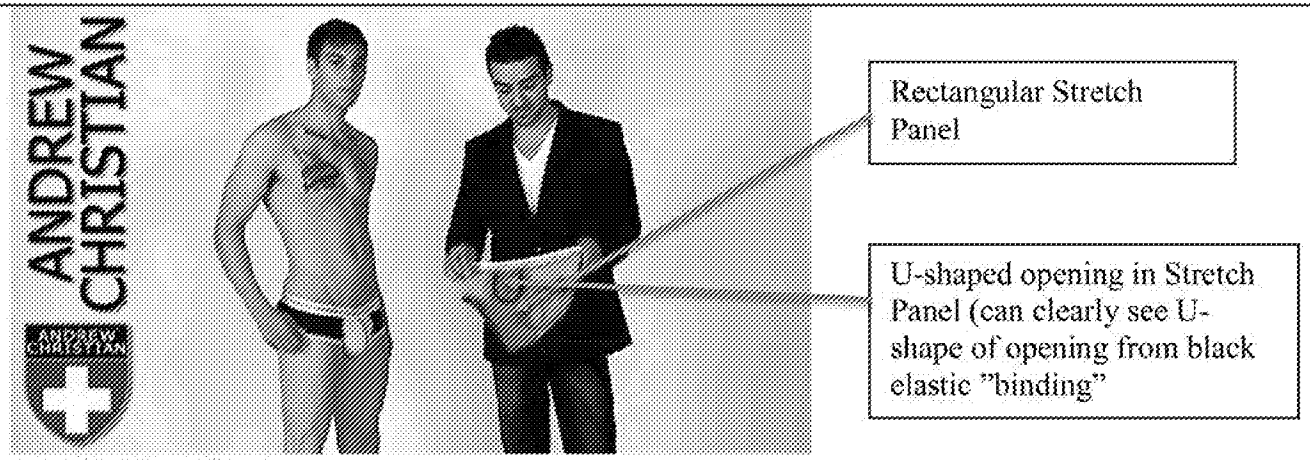 ACI000040 at 00:14. To the extent Plaintiffs contend that the ACI000040 publication does not expressly, implicitly, or inherently disclose that the 9132 Show-It Brief has a rectangular stretch panel, one of ordinary skill in the art would, based on one's knowledge and the disclosure in the ACI000040 publication, understand how to modify the 9132 Show-It Brief to meet this limitation. **The 9133 Show-It Boxer is a garment wherein the stretch panel is a shape with four corners wherein the lengths of the top and bottom edges are approximately equal to each other and the lengths of the left and right edges are approximately equal to each other and the opening is U-shaped.** The Show-It 2009 Line Sheet at ACI000092 discloses that the 9133 Show-It Boxer utilizes the same "Show-It Technology 2.0" utilized in the 9132 Show-It Brief. *See* Show-It 2009 Line Sheet at ACI000092, depicting both the 9132 Show-It Brief and the 9133 Show-It Boxer and describing "Show-It™ with Show-It Technology 2.0" with "our comfy cup." On information and belief, an inside view of the 9133 Show-It Boxer would show a "comfy cup" (that is, a Stretch Panel) inside the Front Portion as shown above in screen shots of the ACI000040 publication. To the extent Plaintiffs contend that the Show-It 2009 Line Sheet 9133 Show-It Boxer or the ACI000040 publication does not expressly, implicitly, or inherently disclose that the 9133 Show-It Boxer includes a rectangular stretch panel,

Claim 3	Exemplary Disclosure in Prior Art
	one of ordinary skill in the art would, based on one's knowledge and the disclosure in Show-It 2009 Line Sheet 9133 Show-It Boxer or the ACI000040 publication, understand how to modify the 9133 Show-It Boxer to meet this limitation. To the extent Plaintiffs contend the '218 Publication does not expressly, implicitly, or inherently disclose a rectangular stretch panel, one of ordinary skill in the art would, based on one's knowledge and the '218 Publication, understand how to modify the disclosure of the '218 Publication to meet this limitation. Alternatively, one of ordinary skill could modify the '218 Publication in view of the Show-It 2009 Line Sheet and/or the ACI000040 publication (disclosure above) to meet this limitation.

Claim 4	Exemplary Disclosure in Prior Art
[4] A garment according to claim 3 wherein the stretch panel comprises a fabric having a stretch of at least 30%.	The obviousness combinations asserted and disclosed in this chart for claim 4 are as follows: • '218 Publication in view of Andrew Christian printed publications • '218 Publication in view of Andrew Christian printed publications in further view of EP O 476 818 See above regarding claim 3. **The '218 Publication discloses a stretch panel comprising a fabric having a stretch of at least 30%. See,** In particular, the only material disclosed by the '218 Publication is an elastically resilient four-way stretch material, as discussed in 1.3, above (fabric having a stretch of at least 30%). A "spandex-contained meshed cloth" is a fabric having a stretch of at least 30%. "[0021] . . . The cover panel is made of a piece of elastic, ventilating cloth (cotton cloth or spandex-contained meshed cloth), having top and bottom ends respectively fixedly fastened to the waistband 13 and the crotch 14." To the extent Plaintiffs contend the '218 Publication does not expressly, implicitly, or inherently disclose the stretch panel comprising a fabric having a stretch of at least 30%, one of ordinary skill in the art would, based on one's

Claim 4	Exemplary Disclosure in Prior Art
	knowledge and the '218 Publication, understand how to modify the disclosure of the '218 Publication to meet this limitation. Alternatively, one with ordinary skill could modify the '218 Publication in view of the Show-It 2009 Line Sheet and/or the ACI000040 publication (disclosure below) to meet this limitation. **The 9132 Show-It Brief includes a stretch panel comprising a fabric having a stretch of at least 30%.** ***See,*** In the screenshot from the ACI000040 publication at 00:20 below, Andrew Christian is demonstrating the stretch of the "comfy cup" (the Stretch Panel) by placing his hand through the opening of the Stretch Panel and into the Pouch. . The ACI000040 publication at 00:25-00:29 shows Andrew Christian pulling on the Stretch Panel ("comfy cup") to show its elasticity, as he says "the binding here is elastic and it moves and gives with your body." *See* ACI000040 at 00:26 (a screenshot of Andrew Christian pulling on the "comfy cup"). On information and belief and based on the way the opening deforms in the ACI000040 publication, the stretch panel must be comprised of a fabric having a stretch of at least 30%: 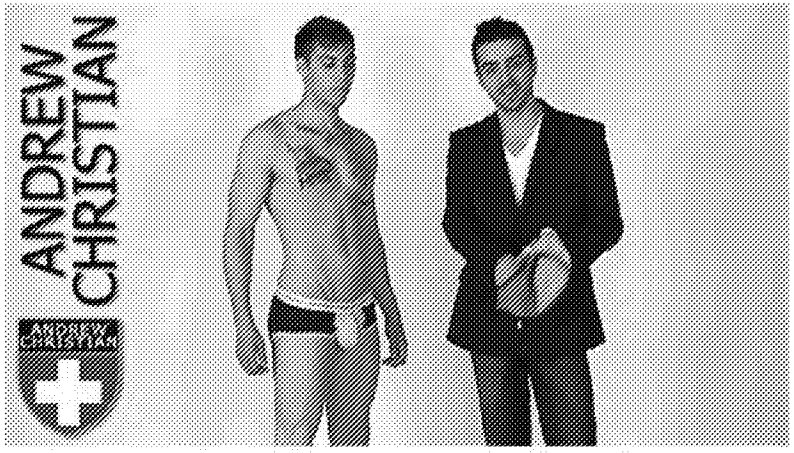 ACI000040 at 00.20.

Claim 4	Exemplary Disclosure in Prior Art
	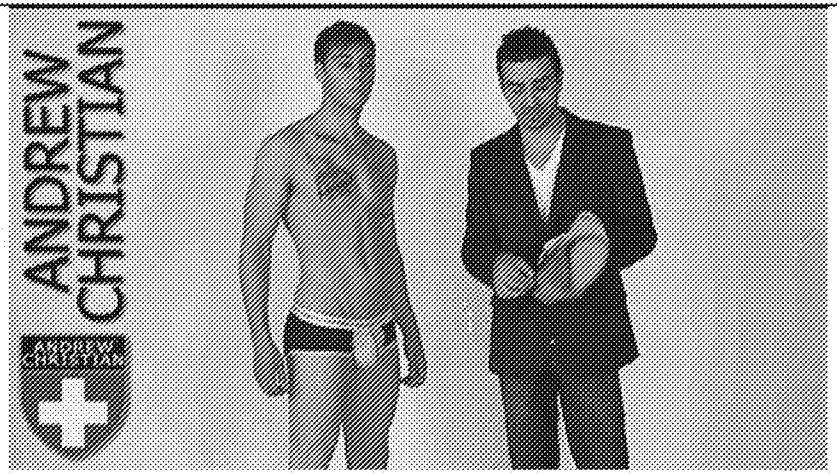 ACI000040 at 00:26. To the extent Plaintiffs contend that the ACI000040 publication does not expressly, implicitly, or inherently disclose the stretch panel comprising a fabric having a stretch of at least 30%, one of ordinary skill in the art would, based on one's knowledge and the disclosure in the ACI000040 publication, understand how to modify the 9132 Show-It Brief to meet this limitation. **The 9133 Show-It Boxer includes a stretch panel comprising a fabric having a stretch of at least 30%.** ***See,*** The Show-It 2009 Line Sheet at ACI000092 discloses that the 9133 Show-It Boxer utilizes the same "Show-It Technology 2.0" utilized in the 9132 Show-It Brief. *See* Show-It 2009 Line Sheet at ACI000092, depicting both the 9132 Show-It Brief and the 9133 Show-It Boxer and describing "Show-It™ with Show-It Technology 2.0" with "our comfy cup." On information and belief, and an inside view of the 9133 Show-It Boxer would show a "comfy cup" (that is, a Stretch Panel) inside the Front Portion and having the same stretch characteristics as shown above in ACI000040 at 00:20 and 00:26.

Claim 4	Exemplary Disclosure in Prior Art
	To the extent Plaintiffs contend the Show-It 2009 Line Sheet or the ACI000040 publication does not expressly, implicitly, or inherently disclose the stretch panel comprising a fabric having a stretch of at least 30%, one of ordinary skill in the art would, based on one's knowledge and the disclosure in the Show-It 2009 Line Sheet or the ACI000040 publication does, understand how to modify the 9133 Show-It Boxer to meet this limitation.

Claim 5	Exemplary Disclosure in Prior Art
[5] A garment according to claim 1 wherein the top location is the waistband seam and the bottom location is the first seam, and a length measured along material of the front portion from the first seam to the waistband seam exceeds a length measured along the fabric of the stretch panel, when unstretched, by at least 30%.	The obviousness combinations asserted and disclosed in this chart for claim 5 are as follows: • '218 Publication in view of Andrew Christian printed publications • '218 Publication in view of Andrew Christian printed publications in further view of EP O 476 818 See above regarding claim 1. **The '218 Publication discloses a garment where the top location is the waistband seam and the bottom location is the first seam.** ***See,*** "[T]he cover panel having top and bottom ends . . . fixedly fastened to waistband" (Abstract) "[0021] . . . The cover panel is made of a piece of elastic, ventilating cloth (cotton cloth or spandex-contained meshed cloth), having top and bottom ends respectively fixedly fastened to the waistband 13 and the crotch 14." "[0023] . . . The top and bottom ends of the well-folded cover panel 40 are then respectively stitched to the waistband 13 and crotch 14 of the undergarment body 10."

Either Anticipation by U.S. Patent Publication No. 2004/0025218 (Published Feb. 12, 2004) or Obviousness In View of Andrew Christian Printed Publications and EP O 476 818 or the '369 Patent

Claim 5	Exemplary Disclosure in Prior Art
	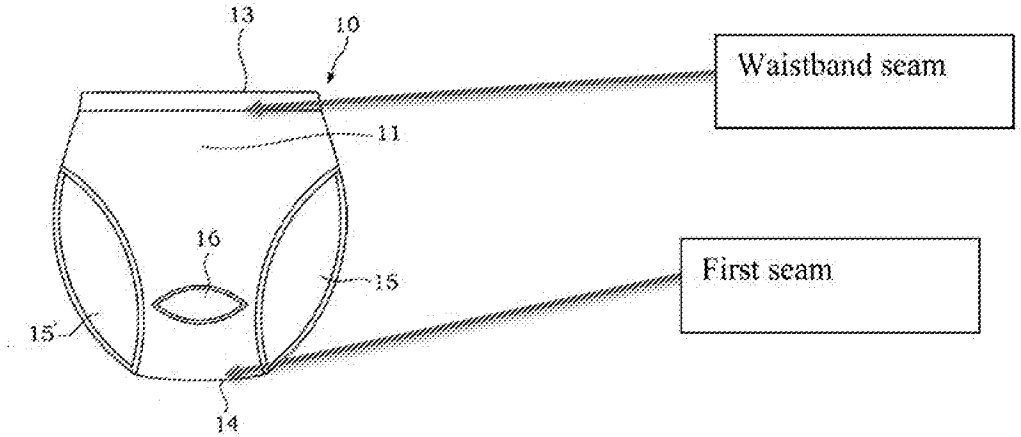 Fig. 1 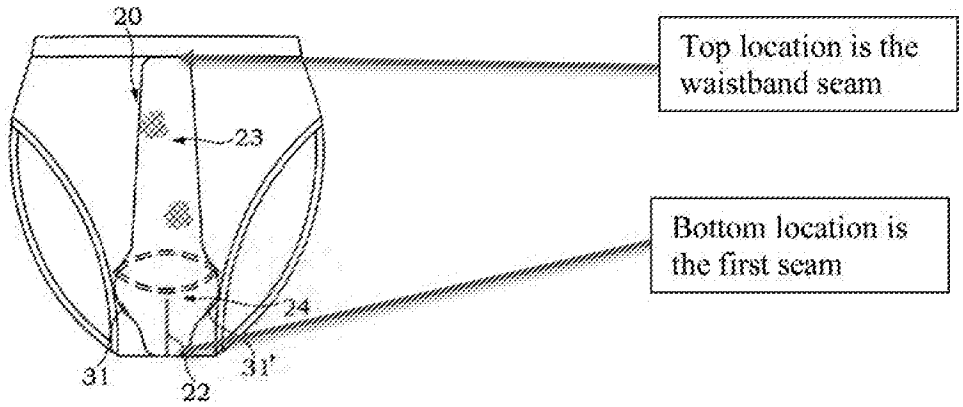 Fig.3

Claim 5	Exemplary Disclosure in Prior Art
	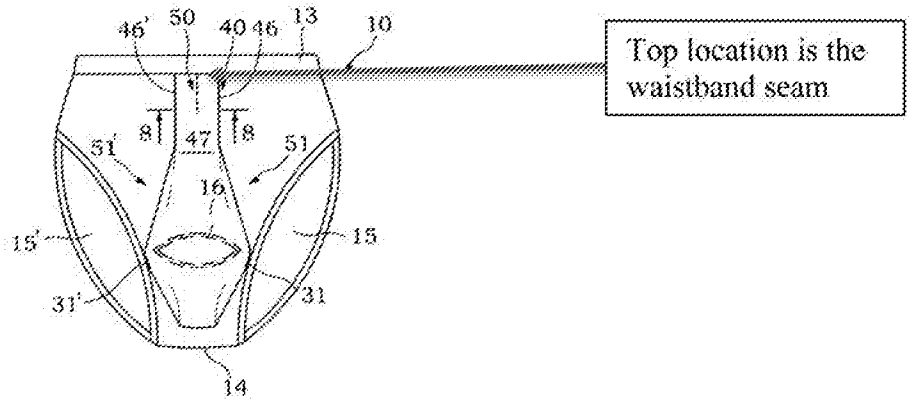 Fig.7 **The '218 Publication discloses the length measured along material of the front portion from the first seam to the waistband seam exceeds a length measured along the fabric of the stretch panel when unstretched, by at least 30%.** ***See,*** In particular, the length measured along material of the cover panel (front portion) from the first seam to the waistband seam exceeds a length measured along the fabric of the stretch panel when unstretched, as described in 1.4, above. This length exceeds that of the stretch panel when unstretched by at least 30% for the same reasons described in 1.4, above.

Either Anticipation by U.S. Patent Publication No. 2004/0025218 (Published Feb. 12, 2004) or Obviousness In View of Andrew Christian Printed Publications and EP O 476 818 or the '369 Patent

Claim 5	Exemplary Disclosure in Prior Art
	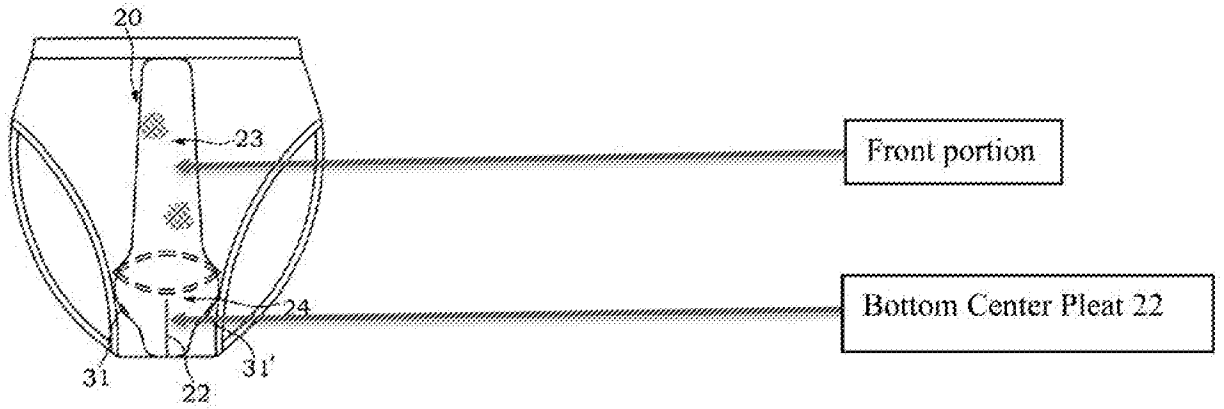 Fig.3 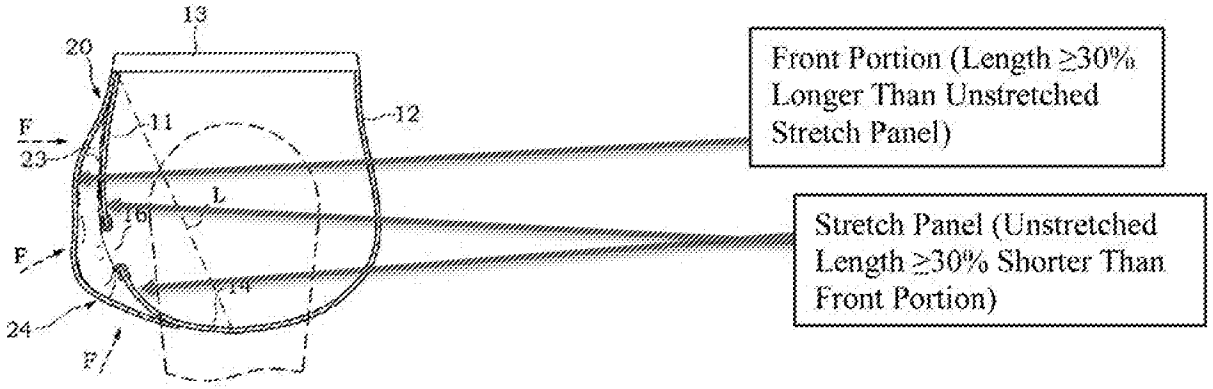 Fig.5

Either Anticipation by U.S. Patent Publication No. 2004/0025218 (Published Feb. 12, 2004) or Obviousness In View of Andrew Christian Printed Publications and EP O 476 818 or the '369 Patent

Claim 5	Exemplary Disclosure in Prior Art
	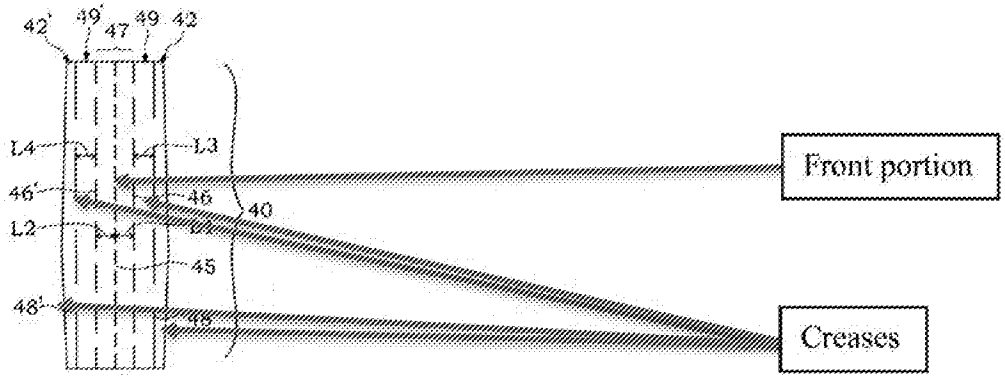 Fig.6

Claim 5	Exemplary Disclosure in Prior Art
	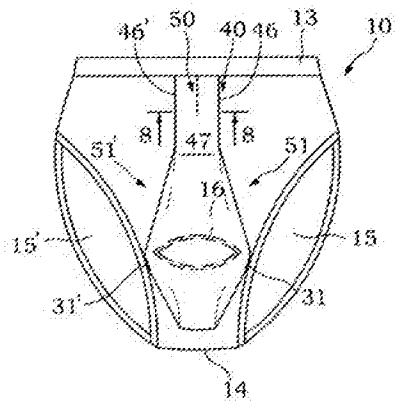 Fig.7 To the extent Plaintiffs contend the '218 Publication does not expressly, implicitly, or inherently disclose the length measured along material of the front portion from the first seam to the waistband seam exceeds a length measured along the fabric of the stretch panel when unstretched, by at least 30%, one of ordinary skill in the art would, based on one's knowledge and the '218 Publication, understand how to modify the disclosure of the '218 Publication to meet this limitation. Alternatively, one with ordinary skill could modify the '218 Publication in view of the Show-It 2009-2010 Catalog, the Show-It 2009 Line Sheet, and/or the ACI000040 publication (disclosure below) to meet this limitation. **The 9132 Show-It Brief is a garment where the top location is the waistband seam and the bottom location is the first seam.** ***See,*** The Show-It 2009 Line Sheet depicts the 9132 Show-It Brief having the stretch panel ("comfy cup") attached to the body at the waistband seam (top location) and at the first seam (bottom location), as shown below. The ACI000040 publication includes an inside view of the 9132 Show-It Brief which shows the stretch panel ("comfy cup") attached to the body at the waistband seam (top location) and at the first seam (bottom location), as shown below.

Either Anticipation by U.S. Patent Publication No. 2004/0025218 (Published Feb. 12, 2004) or Obviousness In View of Andrew Christian Printed Publications and EP O 476 818 or the '369 Patent

Claim 5	Exemplary Disclosure in Prior Art
	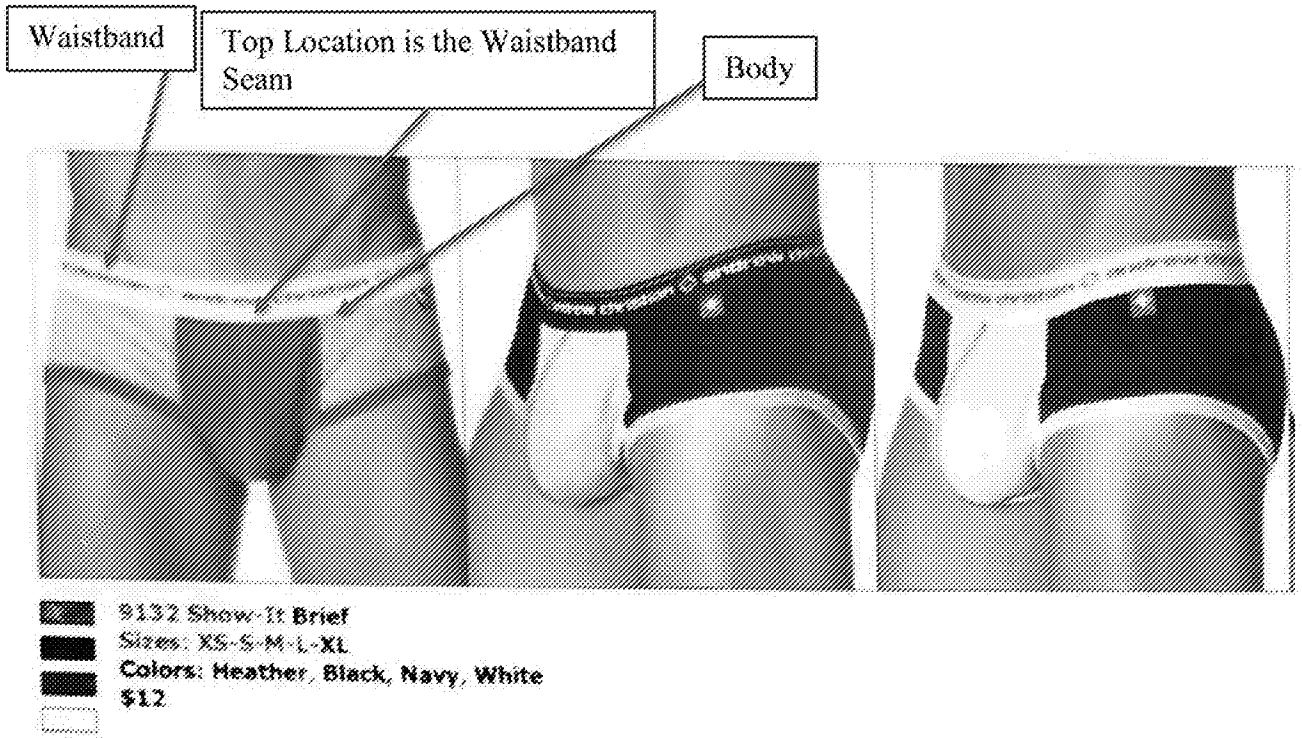 Show-It 2009 Line Sheet at ACI000092.

Claim 5	Exemplary Disclosure in Prior Art
	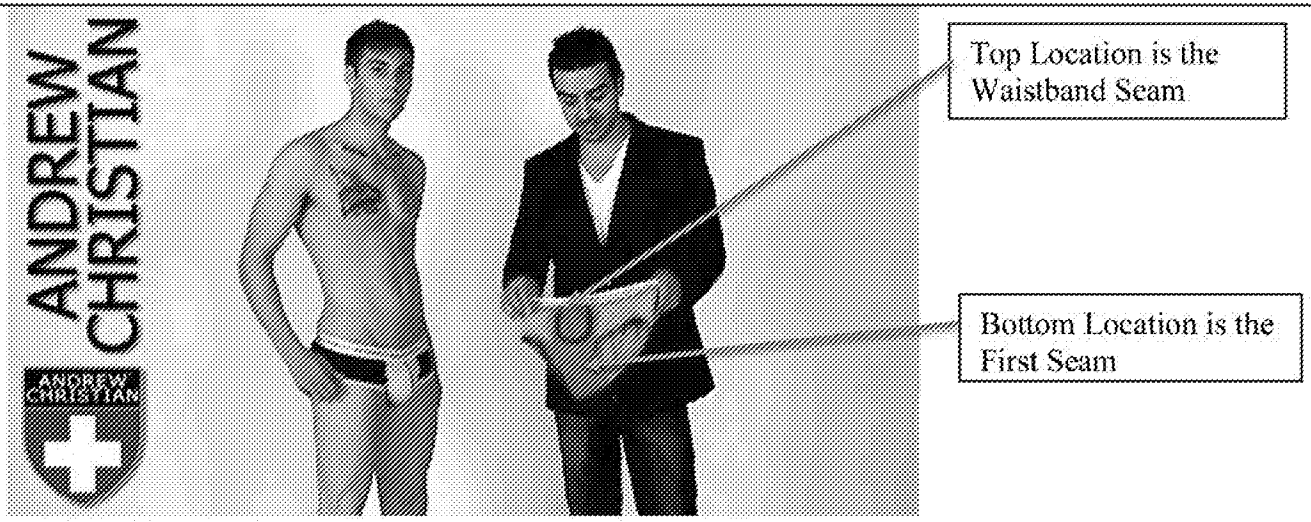 ACI000040 at 00:14. **The 9133 Show-It Boxer is a garment where the top location is the waistband seam and the bottom location is the first seam.** ***See,*** The Show-It 2009 Line Sheet depicts the 9133 Show-It Brief having the stretch panel ("comfy cup") attached to the body at the waistband seam (top location) and at the first seam (bottom location), as shown below.

Claim 5	Exemplary Disclosure in Prior Art
	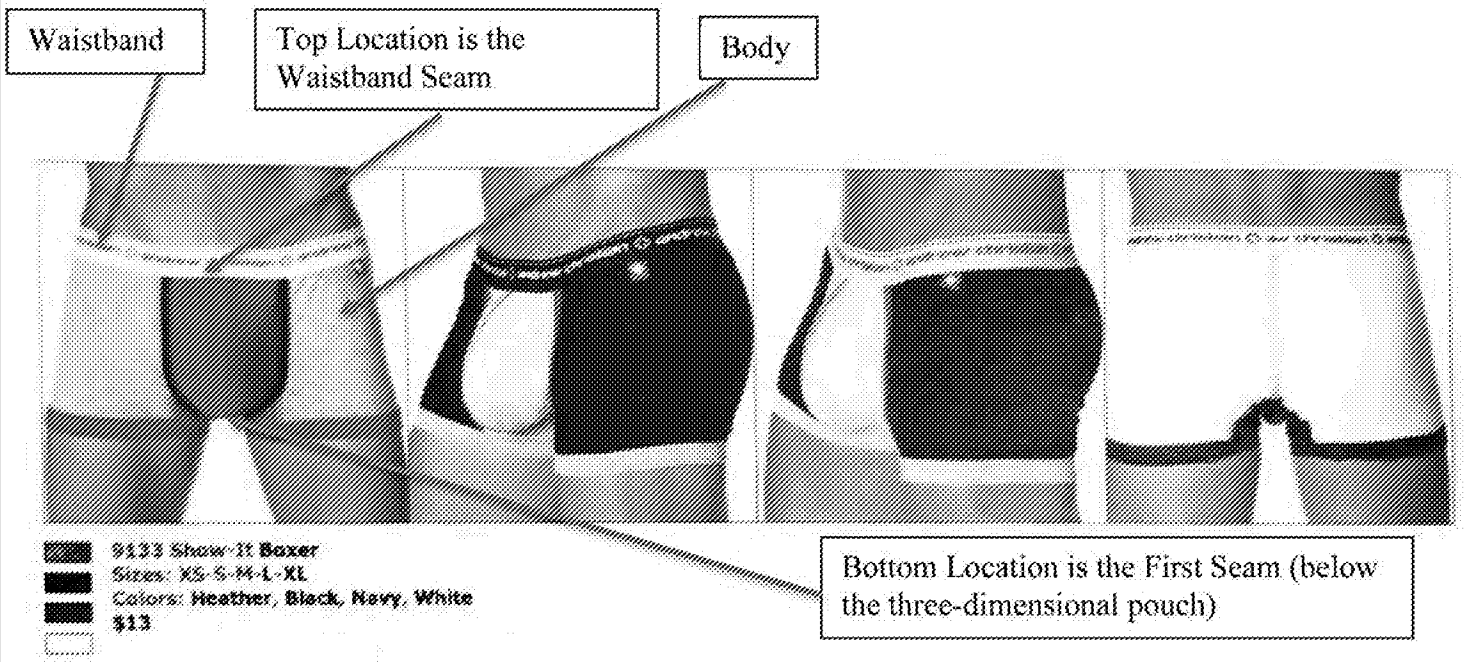 Show-It 2009 Line Sheet at ACI000092. **In the 9132 Show-It Brief, the length measured along material of the front portion from the first seam to the waistband seam exceeds a length measured along the fabric of the stretch panel when unstretched, by at least 30%.** ***See,*** The Show-It 2009-2010 Catalog includes an image depicting a three-dimensional pouch formed between the front portion and the stretch panel ("comfy cup"). The length of the material of the front portion from the first seam to the waistband seam must be at least 30% longer than the length measured along the material of the stretch panel from the first seam to the waistband seam, when unstretched, to account for the creation of the three-dimensional pouch (the concave space) that is large enough to hold a wearer's genitals.

Claim 5	Exemplary Disclosure in Prior Art
	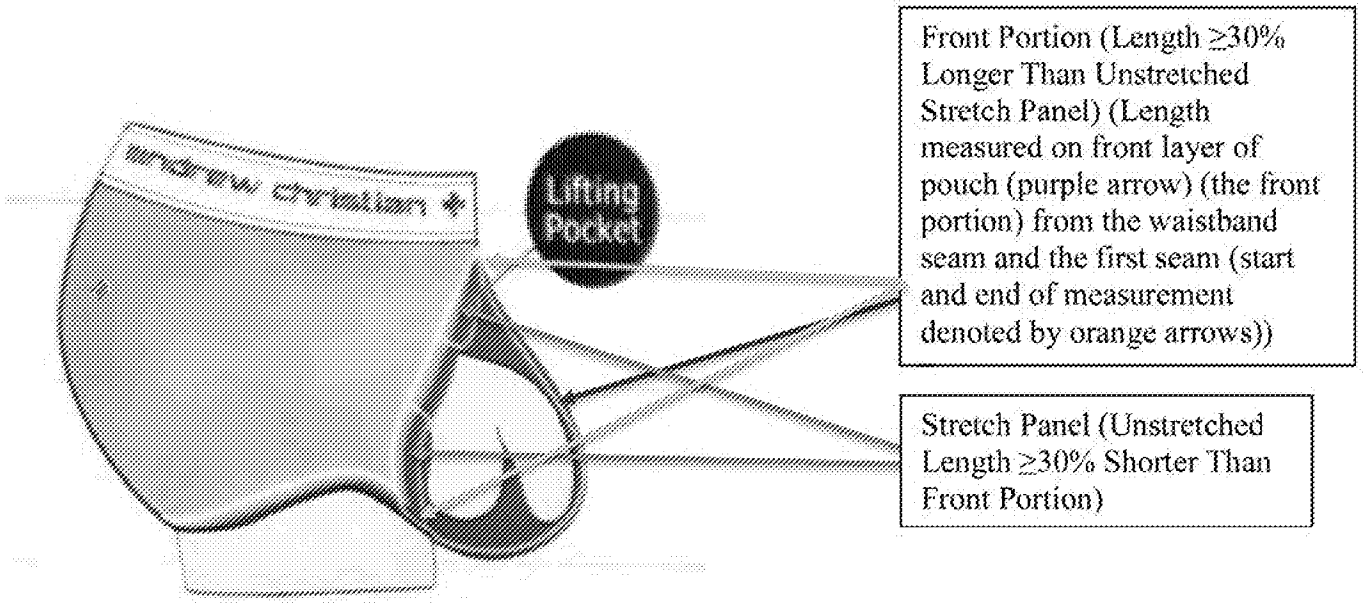 Show-It 2009-2010 Catalog at ACI000094. To the extent Plaintiffs contend the Show-it 2009-2010 Catalog does not expressly, implicitly, or inherently disclose that the 9132 Show-It Brief includes the length measured along material of the front portion from the first seam to the waistband seam exceeds a length measured along the fabric of the stretch panel when unstretched, by at least 30%, one of ordinary skill in the art would, based on one's knowledge and the disclosure in the Show-it 2009-2010 Catalog, understand how to modify the 9132 Show-It Brief to meet this limitation. **In the 9133 Show-It Boxer, the length measured along material of the front portion from the first seam to the waistband seam exceeds a length measured along the fabric of the stretch panel when unstretched, by at least 30%.** ***See,*** The length of the material of the front portion from the first seam to the waistband seam must be at least 30% longer than the length measured along the material of the stretch panel from the first seam to the waistband seam, when

Claim 5	Exemplary Disclosure in Prior Art
	unstretched, to account for the creation of the three-dimensional pouch (the concave space) that is large enough to hold a wearer's genitals. The Show-It 2009 Line Sheet at ACI000092 discloses that the 9133 Show-It Boxer utilizes the same "Show-It Technology 2.0" utilized in the 9132 Show-It Brief. *See* Show-It 2009 Line Sheet at ACI000092, depicting both the 9132 Show-It Brief and the 9133 Show-It Boxer and describing "Show-It™ with Show-It Technology 2.0" with "our comfy cup." On information and belief, an inside view of the 9133 Show-It Boxer would show a "comfy cup" (that is, a Stretch Panel) inside the Front Portion as shown above in Show-It 2009-2010 Catalog at ACI000094. To the extent Plaintiffs contend the Show-It 2009-2010 Catalog does not expressly, implicitly, or inherently disclose that the 9133 Show-It Boxer includes the length measured along material of the front portion from the first seam to the waistband seam exceeds a length measured along the fabric of the stretch panel when unstretched, by at least 30%, one of ordinary skill in the art would, based on one's knowledge and the disclosure in the Show-It 2009-2010 Catalog, understand how to modify the 9133 Show-It Boxer to meet this limitation.

Claim 6	Exemplary Disclosure in Prior Art
[6] A garment according to claim 1 wherein the garment is a pair of undershorts.	The obviousness combinations asserted and disclosed in this chart for claim 6 are as follows: • '218 Publication in view of Andrew Christian printed publications • '218 Publication in view of Andrew Christian printed publications in further view of EP O 476 818 See above regarding claim 1. **The '218 Publication discloses a pair of undershorts.** ***See,*** "A men's undergarment" (Abstract) "MEN'S UNDERGARMENT" (Title)

Either Anticipation by U.S. Patent Publication No. 2004/0025218 (Published Feb. 12, 2004) or Obviousness In View of Andrew Christian Printed Publications and EP O 476 818 or the '369 Patent

Claim 6	Exemplary Disclosure in Prior Art
	"[0002] The present invention provides an undergarment for men and, more particularly, to such a men's undergarment that is good for the health of the user's genitals." 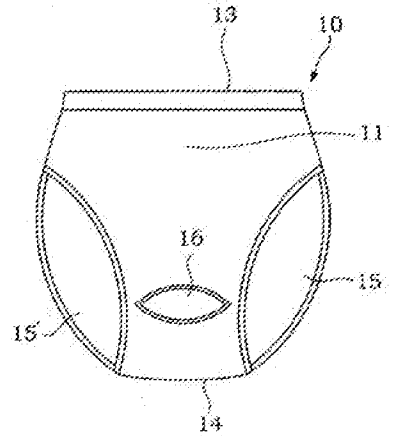 Fig. 1 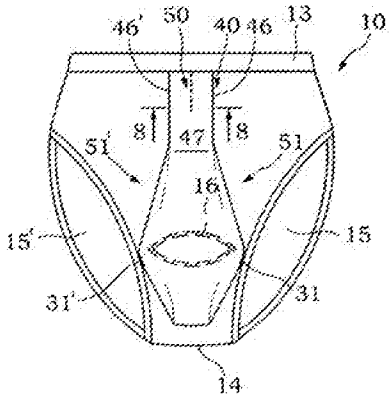 Fig. 7

Claim 6	Exemplary Disclosure in Prior Art
	To the extent Plaintiffs contend the '218 Publication does not expressly, implicitly, or inherently disclose a pair of undershorts, one of ordinary skill in the art would, based on one's knowledge and the '218 Publication, understand how to modify the disclosure of the '218 Publication to meet this limitation. Alternatively, one of ordinary skill could modify the '218 Publication in view of the Show-It 2009 Line Sheet (disclosure below) to meet this limitation. **The 9132 Show-It Brief is a pair of undershorts.** ***See,*** The Show-It 2009 Line Sheet shows that the 9132 Show-It Brief is a pair of undershorts (at ACI000092):

Claim 6	Exemplary Disclosure in Prior Art
	The 9133 Show-It Boxer is a pair of undershorts. ***See,*** The Show-It 2009 Line Sheet shows that the 9133 Show-It Boxer is a pair of undershorts (at ACI000092):

Claim 7	Exemplary Disclosure in Prior Art
[7] A garment according to claim 1 wherein the stretch panel comprises a fabric different from a fabric of the body.	The obviousness combinations asserted and disclosed in this chart for claim 7 are as follows: • '218 Publication in view of Andrew Christian printed publications • '218 Publication in view of Andrew Christian printed publications in further view of EP O 476 818 See above regarding claim 1.

Claim 7	Exemplary Disclosure in Prior Art
	The '218 Publication discloses a stretch panel comprising a fabric different from a fabric of the body. ***See,*** "[0030] 1. The cover panel 20 or 40 can be made of ventilating or meshed elastic cloth material different from the undergarment body 10, achieving a satisfactory ventilation effect." To the extent Plaintiffs contend the '218 Publication does not expressly, implicitly, or inherently disclose a stretch panel comprises a fabric different from a fabric of the body, one of ordinary skill in the art would, based on one's knowledge and the '218 Publication, understand how to modify the disclosure of the '218 Publication to meet this limitation. Alternatively, one of ordinary skill could modify the '218 Publication in view of the Show-It 2009 Line Sheet and/or the ACI000040 publication (disclosure below) to meet this limitation. **The 9132 Show-It Brief includes a stretch panel comprising a fabric different from a fabric of the body.** ***See,*** As shown below in the screenshot from the ACI000040 publication, the stretch panel (the comfy cup) of the pictured 9132 Show-It Brief is made from a red fabric, while at least some of the body is made from a different gray fabric. In addition, the Stretch Panel ("comfy cup") includes a black "binding", which is a fabric different from the fabric of the body. *See* ACI000040 at 00:14. The ACI000040 publication at 00:25-00:29 shows Andrew Christian pulling on the Stretch Panel ("comfy cup") to show its elasticity, as he says "the binding here is elastic and it moves and gives with your body." *See* ACI000040 at 00:26 (a screenshot of Andrew Christian pulling on the "comfy cup"). The Show-It 2009 Line Sheet also discloses that the 9132 Show-It Brief includes a "contrasting pouch [that] accentuates the front." *See* Show-It 2009 Line Sheet at ACI000092.

Claim 7	Exemplary Disclosure in Prior Art
	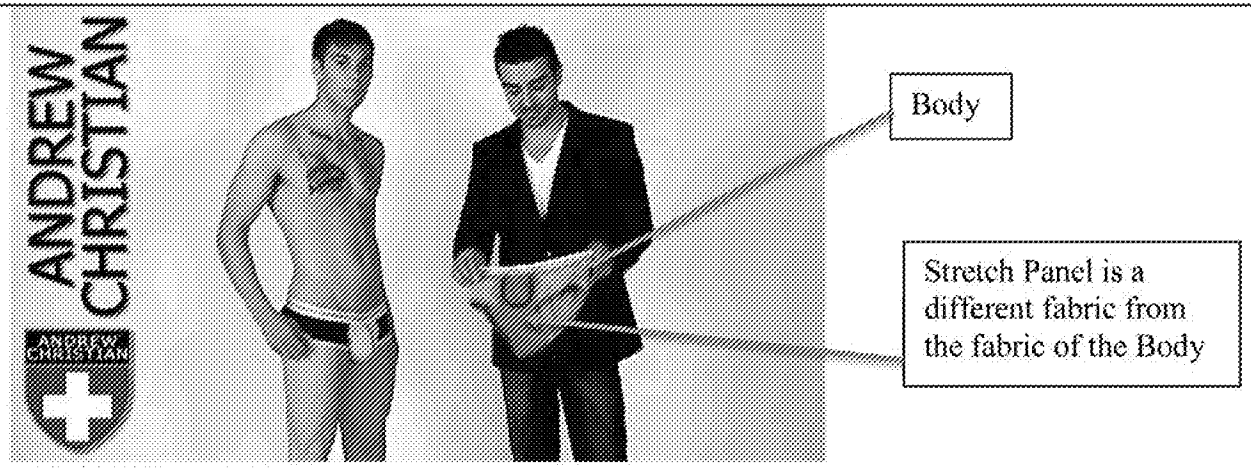 ACI000040 at 00:14. 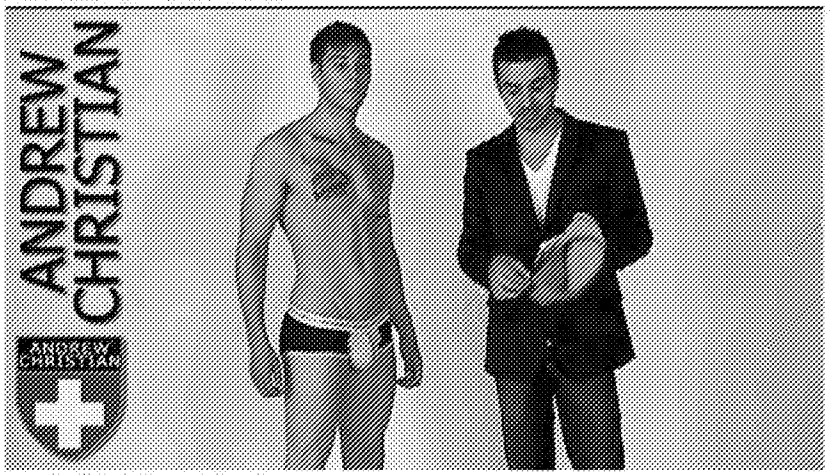 ACI000040 at 00:26. To the extent Plaintiffs contend the Show-It 2009 Line Sheet or the ACI000040 publication does not expressly, implicitly, or inherently disclose that the 9132 Show-It Brief includes a stretch panel comprises a fabric different from a fabric of the body, one of ordinary skill in the art would, based on one's knowledge and the disclosure in the Show-

Claim 7	Exemplary Disclosure in Prior Art
	It 2009 Line Sheet or the ACI000040 publication, understand how to modify the disclosure of the 9132 Show-It Brief to meet this limitation. **The 9133 Show-It Boxer includes a stretch panel comprising a fabric different from a fabric of the body.** ***See,*** The Show-It 2009 Line Sheet at ACI000092 discloses that the 9133 Show-It Boxer utilizes the same "Show-It Technology 2.0" utilized in the 9132 Show-It Brief. *See* Show-It 2009 Line Sheet at ACI000092, depicting both the 9132 Show-It Brief and the 9133 Show-It Boxer and describing "Show-It™ with Show-It Technology 2.0" with "our comfy cup." On information and belief, an inside view of the 9133 Show-It Boxer would show a "comfy cup" (that is, a Stretch Panel) inside the Front Portion in a different fabric from the Body, as shown above in the ACI000040 publication at 00:14 and 00:26. The Show-It 2009 Line Sheet also discloses that the 9133 Show-It Boxer includes "a contrasting pouch [that] accentuates the front." *See* Show-It 2009 Line Sheet at ACI000092. To the extent Plaintiffs contend the Show-It 2009 Line Sheet or the ACI000040 publication does not expressly, implicitly, or inherently disclose that the 9133 Show-It Boxer includes a stretch panel comprises a fabric different from a fabric of the body, one of ordinary skill in the art would, based on one's knowledge and the disclosure in the Show-It 2009 Line Sheet or the ACI000040 publication, understand how to modify the disclosure of the 9133 Show-It Boxer to meet this limitation.

Claim 8	Exemplary Disclosure in Prior Art
[8] A garment according to claim 1 wherein the opening has a width in excess of 2 cm.	The obviousness combinations asserted and disclosed in this chart for claim 8 are as follows: • '218 Publication in view of Andrew Christian printed publications • '218 Publication in view of Andrew Christian printed publications in further view of EP O 476 818 See above regarding claim 1. **The '218 Publication discloses an opening with a width in excess of 2 cm.** ***See,***

Either Anticipation by U.S. Patent Publication No. 2004/0025218 (Published Feb. 12, 2004) or Obviousness In View of Andrew Christian Printed Publications and EP O 476 818 or the '369 Patent

Claim 8	Exemplary Disclosure in Prior Art
	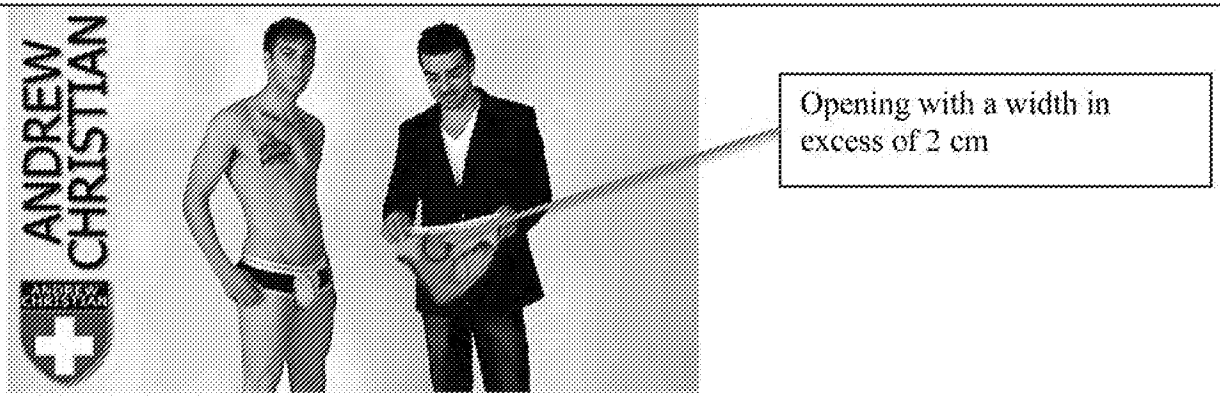 ACI000040 at 00:14. 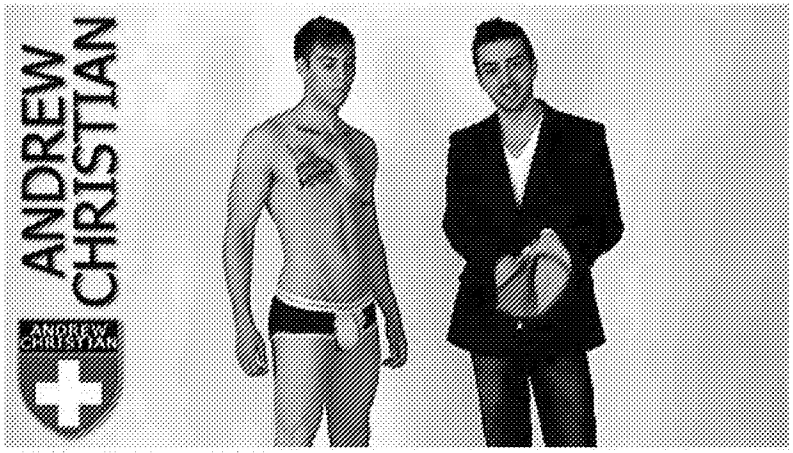 ACI000040 at 00:20 **The 9133 Show-It Boxer includes an opening with a width in excess of 2 cm.** ***See,*** The opening in the "comfy cup" (the Stretch Panel) must necessarily have a width in excess of 2 cm for the (adult) male genitalia to fit through the opening.

Claim 8	Exemplary Disclosure in Prior Art
	The Show-It 2009 Line Sheet at ACI000092 discloses that the 9133 Show-It Boxer utilizes the same "Show-It Technology 2.0" utilized in the 9132 Show-It Brief. *See* Show-It 2009 Line Sheet at ACI000092, depicting both the 9132 Show-It Brief and the 9133 Show-It Boxer and describing "Show-It™ with Show-It Technology 2.0" with "our comfy cup." On information and belief, an inside view of the 9133 Show-It Boxer would show a "comfy cup" (that is, a Stretch Panel) with an opening with a width in excess of 2 cm as shown in the screenshots of the ACI000040 production, above.

Claim 9	Exemplary Disclosure in Prior Art
[9] A garment according to claim 1 wherein: the front portion depends downwardly from the waistband and the front portion is formed to provide the pouch at a mid-section thereof; the stretch panel is positioned to be disposed forward of a wearer's perineum when the garment is worn, whereby, in use, a scrotum of a wearer of the garment is supported underneath by the stretch panel to contain a wearer's penis and scrotum in the pouch.	The obviousness combinations asserted and disclosed in this chart for claim 9 are as follows: • '218 Publication in view of Andrew Christian printed publications • '218 Publication in view of Andrew Christian printed publications in further view of EP O 476 818 See above regarding claim 1. **The '218 Publication discloses a front portion which depends downwardly from the waistband and the front portion is formed to provide a pouch at a mid-section thereof; the stretch panel positioned to be disposed forward of a wearer's perineum when the garment is worn, whereby, in use, a scrotum of a wearer of the garment is supported underneath by the stretch panel to contain a wearer's penis and scrotum in the pouch.** ***See,*** In particular, the '218 Publication discloses the cover panel (front portion) attached to the waistband seam (depending downwardly from the waistband), which forms a pouch in conjunction with the stretch panel, as described in 1.3 and 5, above. The stretch panel is disposed forward of a wearer's perineum. When in use, the wearer's penis and scrotum is supported underneath by the stretch panel to contain a wearer's penis and scrotum in the pouch. "[0009] . . . The cover panel defines with the front panel a penis receiving space above the opening of the front panel, and a scrotum receiving space below the opening of the front panel."

Claim 9	Exemplary Disclosure in Prior Art
	"[0013] FIG. 4 is a schematic front view of the first embodiment of the present invention, showing the genitals received in the penis receiving space and the scrotum receiving space." "[0021] . . . When installed, the cover panel defines with the front panel 11 of the undergarment body 10 a penis receiving space and the crotch 14 a scrotum receiving space." "[0022] . . . When fastened to the undergarment body 10, the upper part of the cover panel 20 defines with the undergarment body 10 a penis receiving space 23 above the opening 16 (see also FIG. 1) for receiving the user's penis, and the side flaps 21 and 21' define with the undergarment body 10a scrotum receiving space 24 below the opening 16 for receiving the user's scrotum." "[0025] Referring to FIGS. 4 and 5, when the undergarment of the first embodiment of the present invention put on the user's body, the user's penis and scrotum are extended out of the undergarment body 10 through the opening 16, keeping the scrotum received in the scrotum receiving space 24 and the penis received in the penis receiving space 23. When the user adjusted the undergarment to the best fit position, the cover panel 20 is forced by its elastic material property to cover the penis and to secure the penis to the inside of the penis receiving space 23. At the same time, the cover panel 20 supports the scrotum in the scrotum receiving space 24." "[0026] Referring to FIGS. 9-11, when the undergarment of the second embodiment of the present invention put on the user's body, the user's penis and scrotum are extended out of the undergarment body 10 through the opening 16, keeping the penis extended upwards and received in the tubular penis receiving space 53 defined between the front panel 11 of the undergarment body 10 and the front cover portion 47 and side cover portions 49 and 49' of the cover panel 40, and the scrotum received in the bag-like scrotum receiving space 54 defined between the front panel 11 of the undergarment body 10 and the cover panel 40 below the opening 16."

Either Anticipation by U.S. Patent Publication No. 2004/0025218 (Published Feb. 12, 2004) or Obviousness In View of Andrew Christian Printed Publications and EP O 476 818 or the '369 Patent

Claim 9	Exemplary Disclosure in Prior Art
	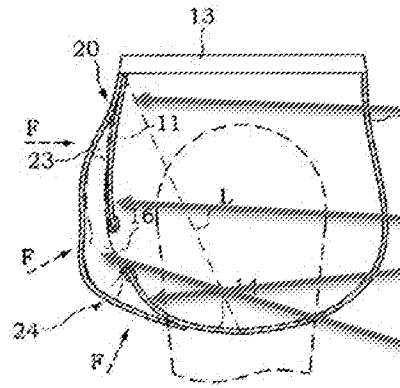 Fig.5 Front Portion (Depending Downwardly from Waistband) Stretch Panel (Forward of User's Perineum, Supporting Penis and Scrotum Underneath) Pouch (receiving spaces 23 and 24)
	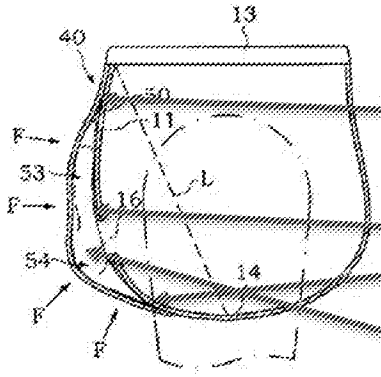 Fig.11 Front Portion (Depending Downwardly from Waistband) Stretch Panel (Forward of User's Perineum, Supporting Penis and Scrotum Underneath) Pouch (receiving spaces 53 and 54)

Claim 9	Exemplary Disclosure in Prior Art
	Furthermore, the 9132 Show-It Brief includes a front portion which depends downwardly from the waistband and the front portion is formed to provide a pouch at a mid-section thereof; the stretch panel positioned to be disposed forward of a wearer's perineum when the garment is worn, whereby, in use, a scrotum of a wearer of the garment is supported underneath by the stretch panel to contain a wearer's penis and scrotum in the pouch. ***See,*** The Show-It 2009-2010 Catalog depicts a scrotum of the wearer being supported underneath by the stretch panel (the comfy cup of the 9132 Show-It Brief) to contain the wearer's penis and scrotum in the pouch: 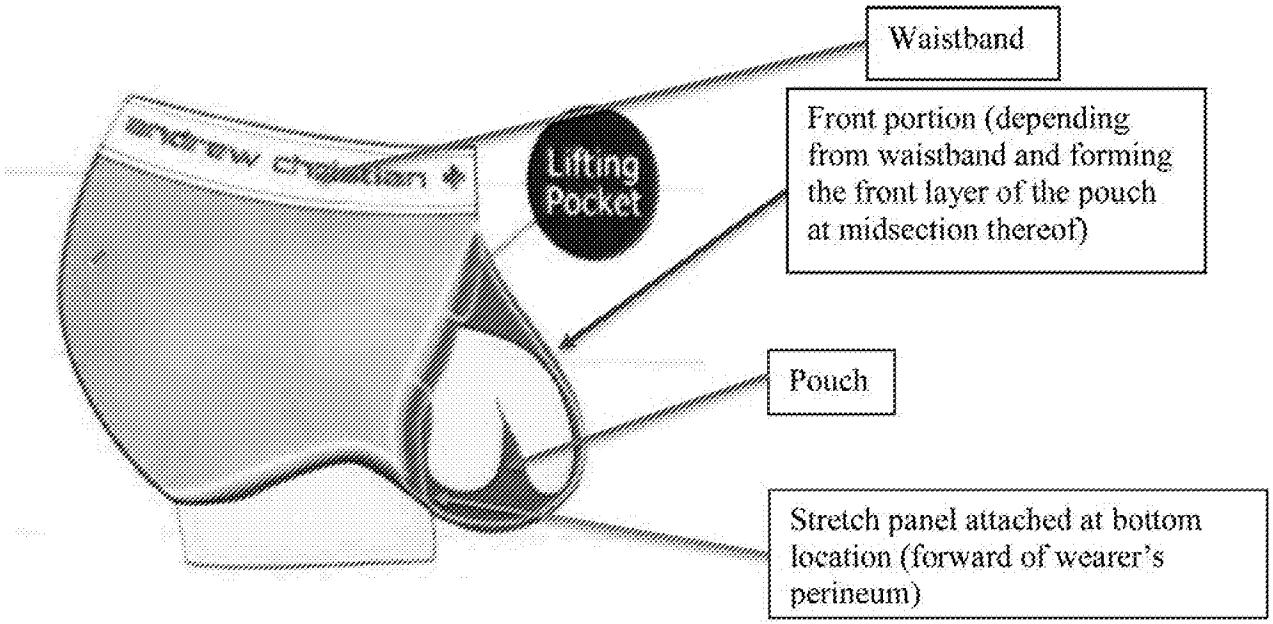 Show-It 2009-2010 Catalog at ACI000094.

Claim 9	Exemplary Disclosure in Prior Art
	The Show-It 2009 Line Sheet discloses that "Our Comfy Cup™ cradles and lifts…" Show-It 2009 Line Sheet at ACI000092. On information and belief, the Stretch Panel ("comfy cup") of the 9132 Show-It Brief must be disposed forward of a wearer's perineum when the garment is worn to be able to provide a "lift" to the scrotum and penis of the wearer as the scrotum an penis are "cradle[d]" in the pouch. 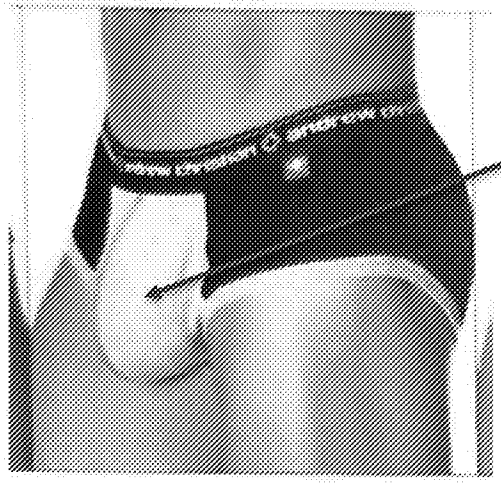 Front portion (in gray) (depending from waistband and forming the outmost layer of the pouch at midsection thereof) Show-It 2009 Line Sheet at ACI000092. To the extent Plaintiffs contend the Show-It 2009-2010 Catalog or the Show-It 2009 Line Sheet does not expressly, implicitly, or inherently disclose the 9132 Show-It Brief having a stretch panel positioned to be disposed forward of a wearer's perineum when the garment is worn, whereby, in use, a scrotum of a wearer of the garment is supported underneath by the stretch panel to contain a wearer's penis and scrotum in the pouch, one of ordinary skill in the art would, based on one's knowledge and the disclosure in the Show-It 2009-2010 Catalog or the Show-It 2009 Line Sheet, understand how to modify the 9132 Show-It Brief to meet this limitation. **The 9133 Show-It Boxer includes a front portion which depends downwardly from the waistband and the front portion is formed to provide a pouch at a mid-section thereof; the stretch panel positioned to be disposed forward of a wearer's perineum when the garment is worn, whereby, in use, a scrotum of a wearer of the**

Claim 9	Exemplary Disclosure in Prior Art
	garment is supported underneath by the stretch panel to contain a wearer's penis and scrotum in the pouch. ***See,*** 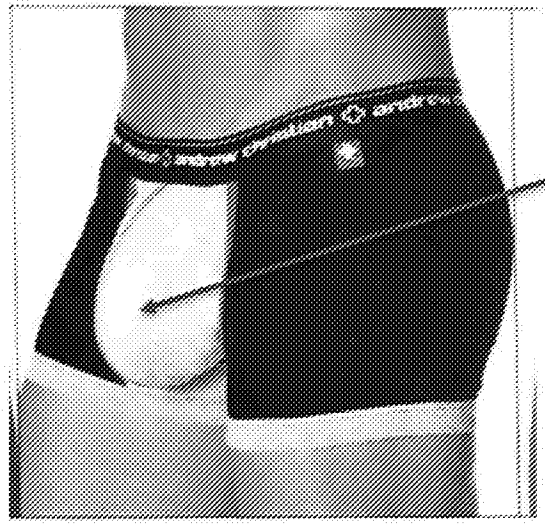 Show-It 2009 Line Sheet at ACI000092. The Show-It 2009 Line Sheet discloses that "Our Comfy Cup™ cradles and lifts…" Show-It 2009 Line Sheet at ACI000092. Show-It 2009 Line Sheet at ACI000092. On information and belief, the Stretch Panel ("comfy cup") of the 9133 Show-It Boxer must be disposed forward of a wearer's perineum when the garment is worn to be able to provide a "lift" to the scrotum and penis of the wearer as the scrotum an penis are "cradle[d]" in the pouch. The Show-It 2009 Line Sheet at ACI000092 discloses that the 9133 Show-It Boxer utilizes the same "Show-It Technology 2.0" utilized in the 9132 Show-It Brief. *See* Show-It 2009 Line Sheet at ACI000092, depicting both the 9132 Show-It Brief and the 9133 Show-It Boxer and describing "Show-It™ with Show-It Technology 2.0" with "our comfy cup." On information and belief, an internal view of the 9133 Show-It Boxer would appear the same as that depicted with respect to the 9132 Show-It Brief, as shown above in the image from the Show-It 2009-2010 Catalog at ACI000094.

Claim 9	Exemplary Disclosure in Prior Art
	To the extent Plaintiffs contend the Show-It 2009 Line Sheet or the Show-It 2009-2010 Catalog does not expressly, implicitly, or inherently disclose that the 9133 Show-It Boxer includes a stretch panel positioned to be disposed forward of a wearer's perineum when the garment is worn, whereby, in use, a scrotum of a wearer of the garment is supported underneath by the stretch panel to contain a wearer's penis and scrotum in the pouch, one of ordinary skill in the art would, based on one's knowledge and the disclosure in the Show-It 2009 Line Sheet or the Show-It 2009-2010 Catalog, understand how to modify the 9133 Show-It Boxer to meet this limitation.

Claim 10	Exemplary Disclosure in Prior Art
[10] A garment according to claim 1, wherein the elastically resilient four-way stretch material is comprised of a spandex blend.	The obviousness combinations asserted and disclosed in this chart for claim 10 are as follows: • '218 Publication in view of Andrew Christian printed publications • '218 Publication in view of Andrew Christian printed publications in further view of EP O 476 818 See above regarding claim 1. **The '218 Publication discloses elastically resilient four-way stretch material comprised of a spandex blend.** ***See,*** In particular, the only material disclosed by the '218 Publication is elastic, ventilating cloth, specifically including a spandex-contained mesh cloth (elastically resilient four-way stretch material). "[0021] . . . The cover panel is made of a piece of elastic, ventilating cloth (cotton cloth or spandex-contained meshed cloth), having top and bottom ends respectively fixedly fastened to the waistband 13 and the crotch 14." **Furthermore, the 9132 Show-It Brief discloses elastically resilient four-way stretch material comprised of a spandex blend.** ***See,*** In ACI000040, Andrew Christian is demonstrating the elastically resilient four way stretch of the "comfy cup" (the Stretch Panel) by placing his hand through the opening of the Stretch Panel and into the Pouch, as the "comfy cup" (the Stretch Panel) stretches in length and width (four-way stretch):

Claim 10	Exemplary Disclosure in Prior Art
	 ACI000040 at 00:20. The "comfy cup" (the Stretch Panel) returns to its original shape (that is, it has "substantial elastic recovery toward its pre-stretching size and shape" and is therefore elastically resilient), once Andrew Christian removes his hand: 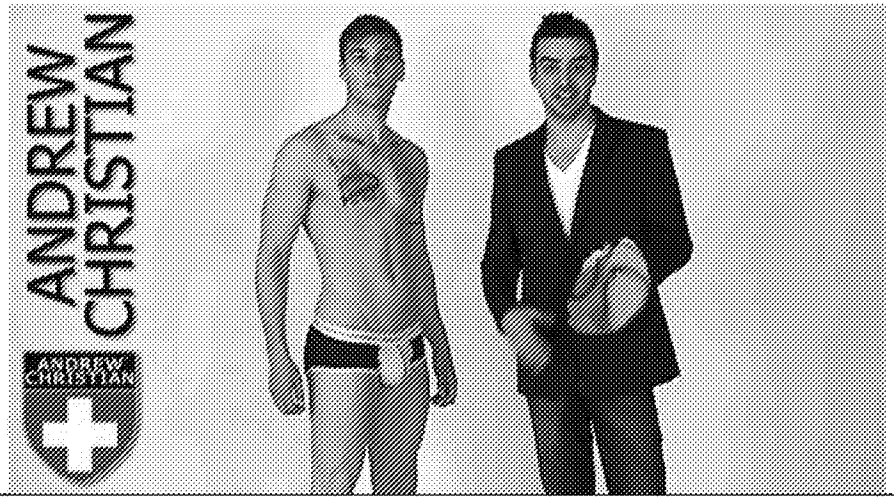

Claim 10	Exemplary Disclosure in Prior Art
	ACI000040 at 00.23. The ACI000040 publication at 00:25-00:29 shows Andrew Christian pulling on the Stretch Panel ("comfy cup") to show its elasticity, as he says "the binding here is elastic and it moves and gives with your body." *See* ACI000040 at 00:26 (a screenshot of Andrew Christian pulling on the "comfy cup"). 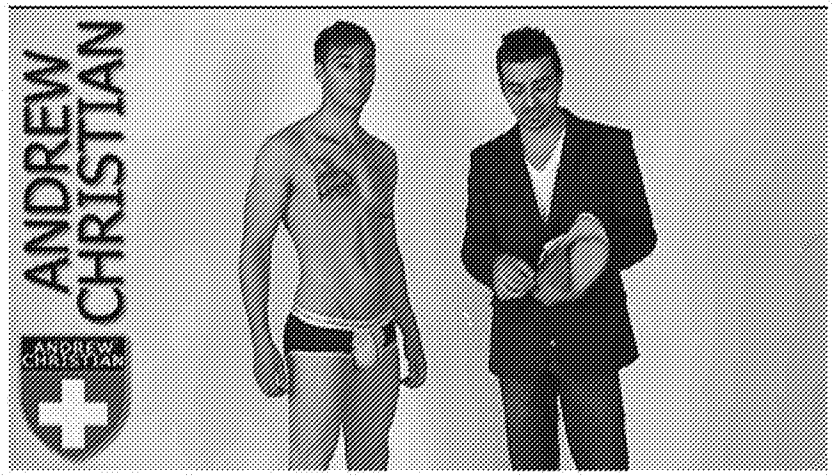 ACI000040 at 00:26. To the extent Plaintiffs contend the ACI000040 publication does not expressly, implicitly, or inherently disclose that the 9132 Show-It Brief includes the elastically resilient four-way stretch material comprised of a spandex blend, one of ordinary skill in the art would, based on one's knowledge and the disclosure from the ACI000040 publication, understand how to modify the 9132 Show-It Brief to meet this limitation, as spandex blends were well-known and often used in male undergarments, among other garments, in the 2009 timeframe. **The 9133 Show-It Boxer discloses elastically resilient four-way stretch material comprised of a spandex blend.** ***See,***

Claim 10	Exemplary Disclosure in Prior Art
	The Show-It 2009 Line Sheet at ACI000092 discloses that the 9133 Show-It Boxer utilizes the same "Show-It Technology 2.0" utilized in the 9132 Show-It Brief. *See* Show-It 2009 Line Sheet at ACI000092, depicting both the 9132 Show-It Brief and the 9133 Show-It Boxer and describing "Show-It™ with Show-It Technology 2.0" with "our comfy cup." On information and belief, an inside view of the 9133 Show-It Boxer would show a "comfy cup" (that is, a Stretch Panel) inside the Front Portion as shown above in ACI000040 at 00:20, 00:23, and 00:26. To the extent Plaintiffs contend the Show-It 2009 Line Sheet or the ACI000040 publication does not expressly, implicitly, or inherently disclose the 9133 Show-It Boxer includes elastically resilient four-way stretch material comprised of a spandex blend, one of ordinary skill in the art would, based on one's knowledge and the the Show-It 2009 Line Sheet or the ACI000040 publication, understand how to modify the 9133 Show-It Boxer to meet this limitation, as spandex blends were well-known and often used in male undergarments, among other garments, in the 2009 timeframe.

Claim 13	Exemplary Disclosure in Prior Art
[13] A garment according to claim 1 wherein the opening has a U-shape when the stretch panel is in a relaxed state.	The obviousness combinations asserted and disclosed in this chart for claim 13 are as follows: • '218 Publication in view of Andrew Christian printed publications • '218 Publication in view of Andrew Christian printed publications in further view of EP O 476 818 See above regarding claim 1. One with ordinary skill in the art would, based on one's knowledge and the disclosure in the '218 Publication, understand how to modify the disclosure of the '218 Publication to meet this limitation. Alternatively, one of ordinary skill could modify the '218 Publication in view of the ACI000040 publication and/or Show-It 2009 Line Sheet (disclosure below) to meet this limitation. **The 9132 Show-It Brief's opening has a U-shape when the stretch panel is in a relaxed state.** ***See,***

Claim 13	Exemplary Disclosure in Prior Art
	The ACI000040 production shows a U-shaped opening in the stretch panel ("comfy cup"). In the screenshot below, the U-shaped opening is shown in black as Andrew Christian holds the 9132 Show-It Brief in a relaxed state. 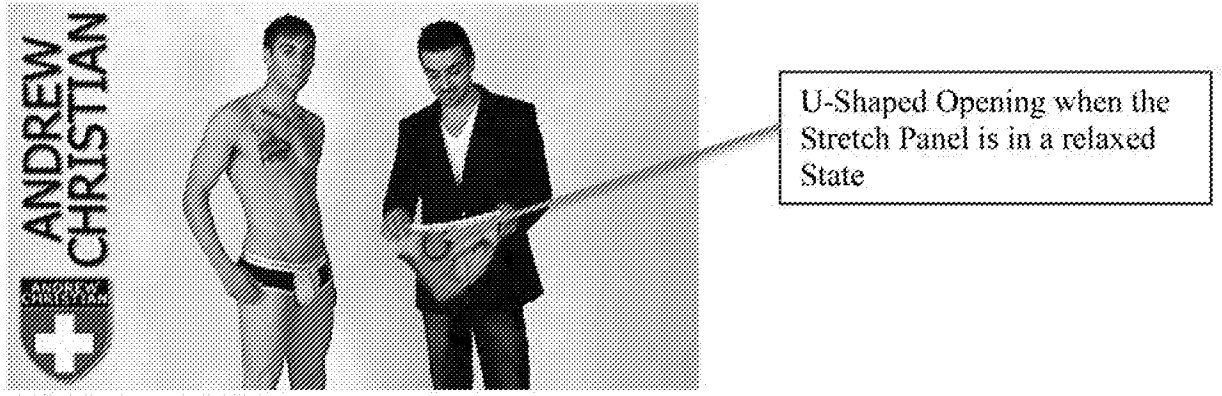 ACI000040 at 00:14. **The 9133 Show-It Boxer's opening has a U-shape when the stretch panel is in a relaxed state.** ***See,*** The Show-It 2009 Line Sheet at ACI000092 discloses that the 9133 Show-It Boxer utilizes the same "Show-It Technology 2.0" utilized in the 9132 Show-It Brief. *See* Show-It 2009 Line Sheet at ACI000092, depicting both the 9132 Show-It Brief and the 9133 Show-It Boxer and describing "Show-It™ with Show-It Technology 2.0" with "our comfy cup." On information and belief, an inside view of the 9133 Show-It Boxer would show a "comfy cup" (Stretc Panel) inside the Front Portion and having the same U-shape as depicted in the screenshot from the ACI000040 publication above.

Claim 14	Exemplary Disclosure in Prior Art
[14] A garment according to claim 1 wherein the stretch panel is formed from a single	The obviousness combinations asserted and disclosed in this chart for claim 14 are as follows: • '218 Publication in view of Andrew Christian printed publications • '218 Publication in view of Andrew Christian printed publications in further view of EP O 476 818

Claim 14	Exemplary Disclosure in Prior Art
unitary piece of woven fabric.	See above regarding claim 1. **The '218 Publication discloses a stretch panel formed from a single unitary piece of woven fabric.** ***See,*** In particular, the only material disclosed by the '218 Publication is elastic, ventilating cloth, specifically cotton or spandex-contained mesh cloth (woven fabric). The '218 Publication discloses the stretch panel, as described in 1.3, above, is a single unitary piece of fabric. "[0021] . . . The cover panel is made of a piece of elastic, ventilating cloth (cotton cloth or spandex-contained meshed cloth), having top and bottom ends respectively fixedly fastened to the waistband 13 and the crotch 14." See also [0022], Claim 2, Claim 3. 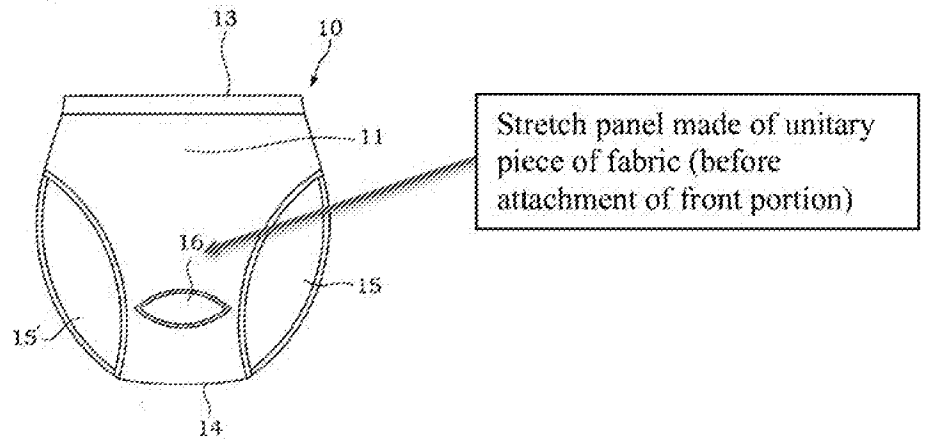 Fig. 1

Either Anticipation by U.S. Patent Publication No. 2004/0025218 (Published Feb. 12, 2004) or Obviousness In View of Andrew Christian Printed Publications and EP O 476 818 or the '369 Patent

Claim 14	Exemplary Disclosure in Prior Art
	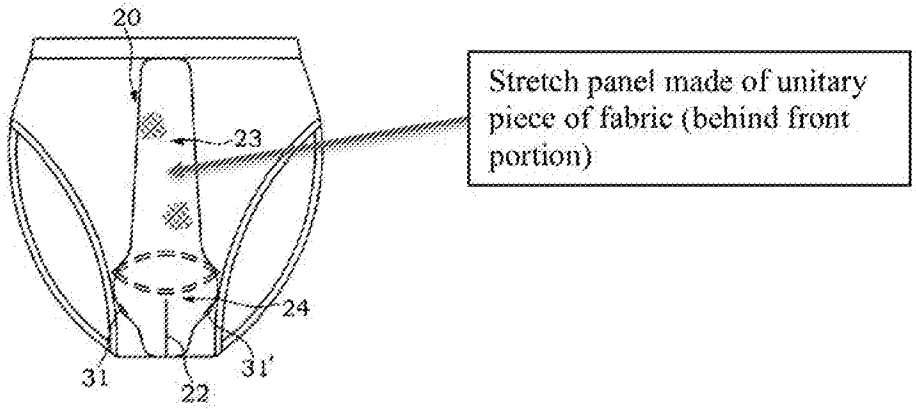 Fig.3 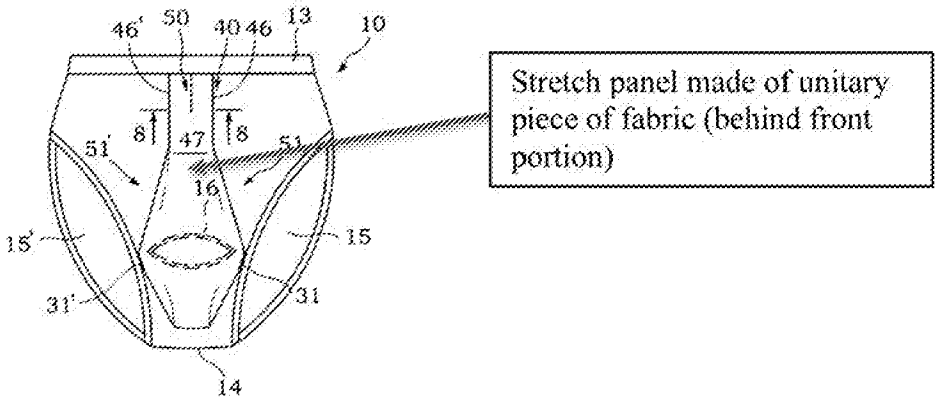 Fig.7

Claim 14	Exemplary Disclosure in Prior Art
	To the extent Plaintiffs contend the '218 Publication does not expressly, implicitly, or inherently disclose a stretch panel formed from a single unitary piece of woven fabric, one of ordinary skill in the art would, based on one's knowledge and the '218 Publication, understand how to modify the disclosure of the '218 Publication to meet this limitation. Alternatively, one of ordinary skill could modify the '218 Publication in view of the ACI000040 publication and/or Show-It 2009 Line Sheet (disclosure below) to meet this limitation. **The 9132 Show-It Brief's stretch panel is formed from a single unitary piece of woven fabric.** ***See,*** The ACI000040 publication shows a "comfy cup" (Stretch Panel) in red, that is formed from a single piece of woven fabric, as shown below: 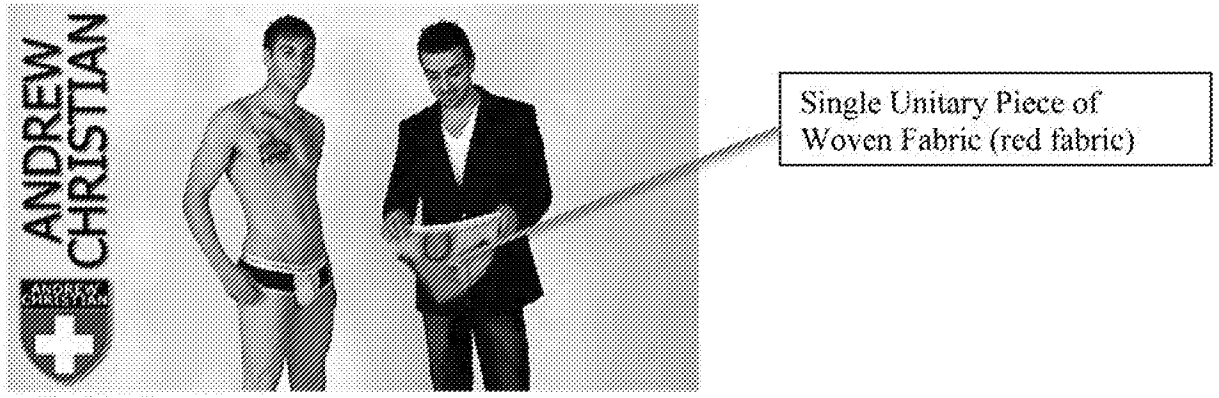 ACI000040 at 00:14. To the extent Plaintiffs contend the ACI000040 publication does not expressly, implicitly, or inherently disclose that the 9132 Show-It Brief includes a stretch panel formed from a single unitary piece of woven fabric, one of ordinary skill in the art would, based on one's knowledge and the ACI000040 publication, understand how to modify the 9132 Show-It Brief to meet this limitation.

Either Anticipation by U.S. Patent Publication No. 2004/0025218 (Published Feb. 12, 2004) or Obviousness In View of Andrew Christian Printed Publications and EP O 476 818 or the '369 Patent

Claim 14	Exemplary Disclosure in Prior Art
	The 9133 Show-It Boxer's stretch panel is formed from a single unitary piece of woven fabric. ***See,*** The Show-It 2009 Line Sheet at ACI000092 discloses that the 9133 Show-It Boxer utilizes the same "Show-It Technology 2.0" utilized in the 9132 Show-It Brief. *See* Show-It 2009 Line Sheet at ACI000092, depicting both the 9132 Show-It Brief and the 9133 Show-It Boxer and describing "Show-It™ with Show-It Technology 2.0" with "our comfy cup." On information and belief, an inside view of the 9133 Show-It Boxer would show a "comfy cup" (that is, a Stretch Panel) formed from a single unitary piece of woven fabric inside the Front Portion as shown above in ACI000040 at 00:14. To the extent Plaintiffs contend the Show-It 2009 Line Sheet or the ACI000040 publication does not expressly, implicitly, or inherently disclose the 9133 Show-It Boxer including a stretch panel formed from a single unitary piece of woven fabric, one of ordinary skill in the art would, based on one's knowledge and the Show-It 2009 Line Sheet or the ACI000040 publication, understand how to modify the 9133 Show-It Boxer to meet this limitation.

Claim 15	Exemplary Disclosure in Prior Art
[15] A garment according to claim 1 wherein the pouch comprises a dart seam stitched along a bottom portion of the pouch and substantially centrally to provide extra volume in front of and underneath the genitals of a wearer.	The obviousness combinations asserted and disclosed in this chart for claim 15 are as follows: • '218 Publication in view of Andrew Christian printed publications • '218 Publication in view of Andrew Christian printed publications in further view of EP O 476 818 See above regarding claim 1. The Court has construed "a dart seam stitched along a bottom portion of the pouch" as "a shaping seam stitched along a bottom portion of the pouch." **The '218 Publication discloses a pouch with a shaping seam stitched along a bottom portion of the pouch and substantially centrally to provide extra volume in front of and underneath the genitals of a wearer.** ***See,*** In particular, the '218 Publication discloses a bottom center pleat (shaping seam stitched along a bottom portion of the pouch and substantially centrally), which provides extra volume in front of and underneath the genitals of the wearer.

Claim 15	Exemplary Disclosure in Prior Art
	"[0022] FIGS. 2-5 show the first embodiment of the present invention. As illustrated, the cover panel 20 is an elongated piece of cloth, having a bottom center pleat 22 longitudinally upwardly extended from the bottom end thereof and two smoothly arched side flaps 21 and 21' symmetrically formed integral with two opposite lateral sides thereof near the bottom end. When fastened to the undergarment body 10, the upper part of the cover panel 20 defines with the undergarment body 10 a penis receiving space 23 above the opening 16 (see also FIG. 1) for receiving the user's penis, and the side flaps 21 and 21' define with the undergarment body 10a scrotum receiving space 24 below the opening 16 for receiving the user's scrotum. Further, because of the effect of the bottom center pleat 22 [the shaping seam stitched along a bottom portion of the pouch], the lower part of the cover panel 20 protrudes forwards from the undergarment body 10, forming a three-dimensional status. Further, the border areas of the side flaps 21 and 21' are respectively stitched to the undergarment body 10, forming stitched lines 31 and 31' that hold the cover panel 20 in the center position against biasing." 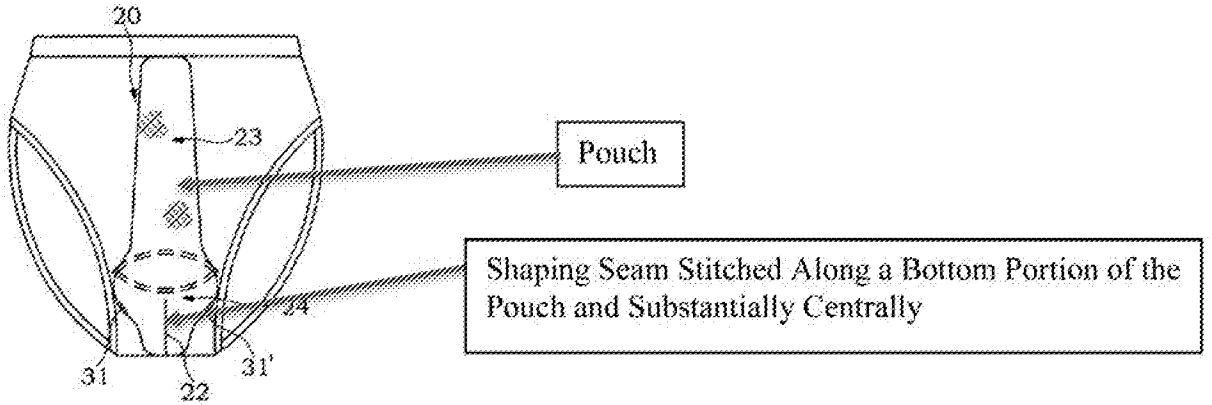 Fig.3 **Furthermore, the 9132 Show-It Brief includes a pouch with a shaping seam stitched along a bottom portion of the pouch and substantially centrally to provide extra volume in front of and underneath the genitals of a wearer.** ***See,***

Either Anticipation by U.S. Patent Publication No. 2004/0025218 (Published Feb. 12, 2004) or Obviousness In View of Andrew Christian Printed Publications and EP O 476 818 or the '369 Patent

Claim 15	Exemplary Disclosure in Prior Art
	The Show-It 2009 Line Sheet shows a dart seam, the seam down the middle of the front portion (the front layer of the pouch), in the 9132 Show-It Briefs. The ACI000040 publication shows the same dart seam. Show-It 2009 Line Sheet at ACI000091. ACI000040 at 00:10. 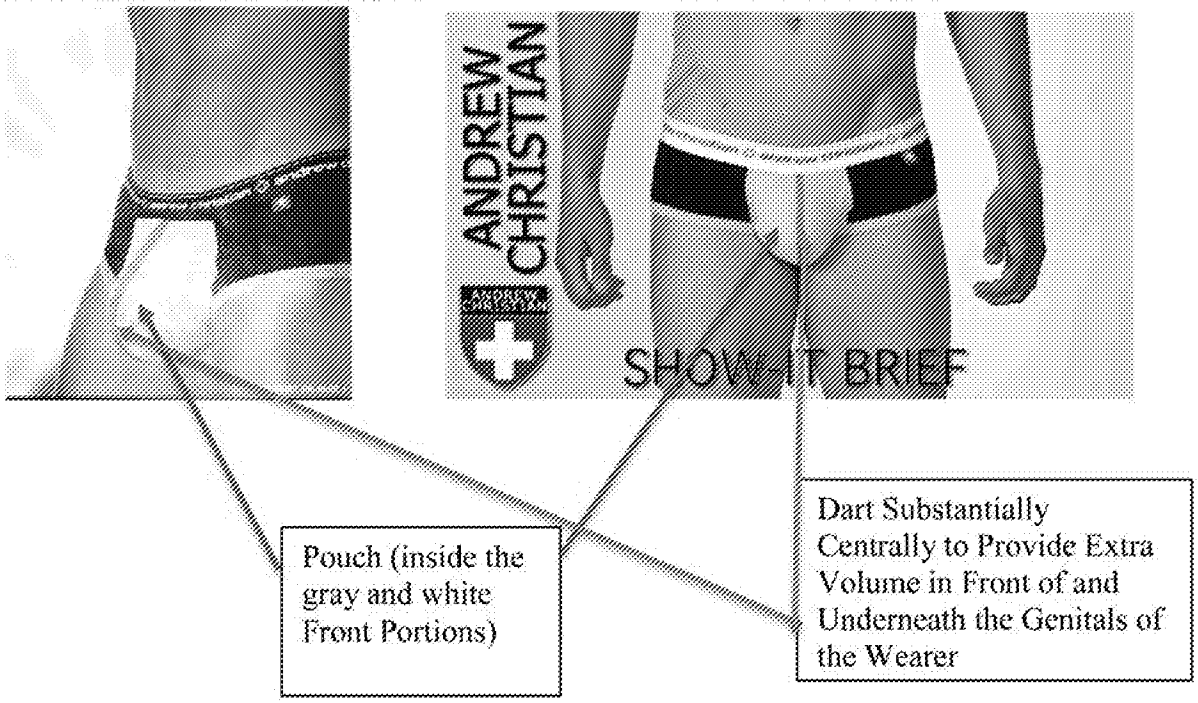 To the extent Plaintiffs contend the Show-It 2009 Line Sheet or the ACI000040 publication does not expressly, implicitly, or inherently disclose that the 9132 Show-It Brief includes a pouch with a dart seam stitched along a bottom portion of the pouch and substantially centrally to provide extra volume in front of and underneath the genitals of a wearer, one of ordinary skill in the art would, based on one's knowledge and the disclosure in the Show-It 2009 Line Sheet or the ACI000040 publication, understand how to modify the 9132 Show-It Brief to meet this limitation.

Either Anticipation by U.S. Patent Publication No. 2004/0025218 (Published Feb. 12, 2004) or Obviousness In View of Andrew Christian Printed Publications and EP O 476 818 or the '369 Patent

Claim 15	Exemplary Disclosure in Prior Art
	The 9133 Show-It Boxer includes a pouch with a shaping seam stitched along a bottom portion of the pouch and substantially centrally to provide extra volume in front of and underneath the genitals of a wearer. ***See,*** The Show-It 2009 Line Sheet shows a dart seam, the seam down the middle of the front portion (the front layer of the pouch), in the 9133 Show-It Boxer. The ACI000038 publication shows the same dart seam. 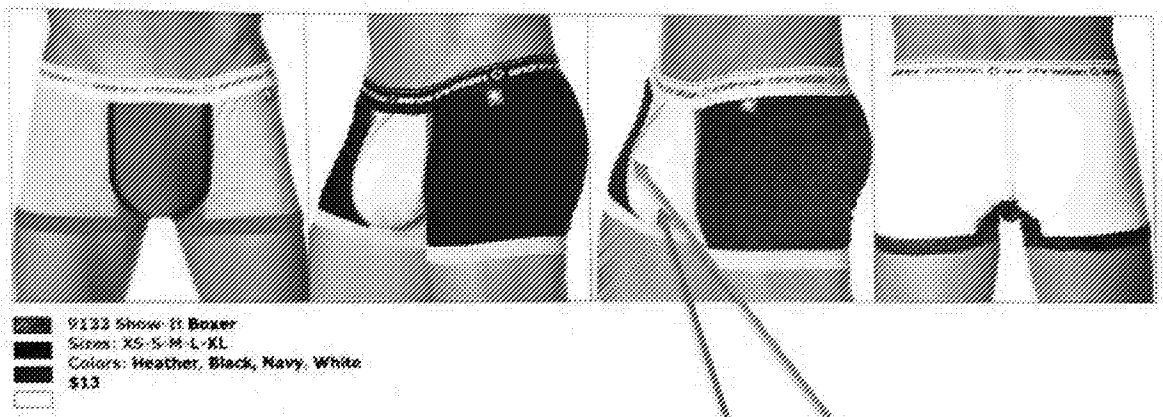 Show-It 2009 Line Sheet at ACI000092. 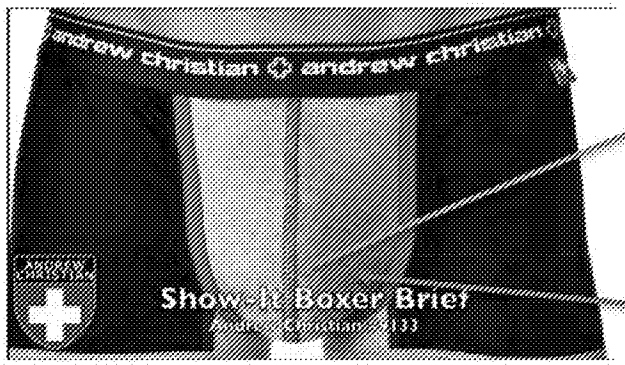 ACI000038 at 2:43. Dart Substantially Centrally to Provide Extra Volume in Front of and Underneath the Genitals of the Wearer Pouch (inside the gray and white Front Portions)

Either Anticipation by U.S. Patent Publication No. 2004/0025218 (Published Feb. 12, 2004) or Obviousness In View of Andrew Christian Printed Publications and EP O 476 818 or the '369 Patent

Claim 15	Exemplary Disclosure in Prior Art
	To the extent Plaintiffs contend the Show-It 2009 Line Sheet or the ACI000038 publication does not expressly, implicitly, or inherently disclose that the 9132 Show-It Boxer includes a pouch with a dart seam stitched along a bottom portion of the pouch and substantially centrally to provide extra volume in front of and underneath the genitals of a wearer, one of ordinary skill in the art would, based on one's knowledge and the disclosure in the Show-It 2009 Line Sheet or the ACI000038 publication, understand how to modify the 9132 Show-It Boxer to meet this limitation.