US007958571B2

(12) **United States Patent**
Kitsch et al.

(10) **Patent No.: US 7,958,571 B2**
(45) **Date of Patent: Jun. 14, 2011**

(54) **UNDERWEAR GARMENT FOR A MALE**

(75) Inventors: **William Trent Kitsch**, Kelowna (CA); **Craig Golinowski**, Calgary (CA)

(73) Assignee: **Saxx Apparel, Ltd.**, Kelowna, BC (CA)

(*) Notice: Subject to any disclaimer, the term of this patent is extended or adjusted under 35 U.S.C. 154(b) by 778 days.

(21) Appl. No.: **12/000,966**

(22) Filed: **Dec. 19, 2007**

(65) **Prior Publication Data**

US 2008/0178369 A1 Jul. 31, 2008

Related U.S. Application Data

(60) Provisional application No. 60/886,545, filed on Jan. 25, 2007.

(51) **Int. Cl.**
A41B 9/02 (2006.01)

(52) **U.S. Cl.** **2/403**; 2/405

(58) **Field of Classification Search** 2/400–405; 602/67, 68; 450/104
See application file for complete search history.

(56) **References Cited**

U.S. PATENT DOCUMENTS

2,033,551	A		3/1936	Rumery	
2,254,863	A		9/1941	Weihe	
2,328,953	A	*	9/1943	Chatfield et al.	602/67
2,438,310	A	*	3/1948	Ashe et al.	2/403
2,601,602	A		6/1952	Firshing, Sr.	
2,623,210	A	*	12/1952	Chatfield	450/104
2,624,336	A		1/1953	Hansley	
2,641,257	A	*	6/1953	Rutledge	602/67
2,652,053	A		9/1953	Dann	
2,872,685	A		2/1959	Denbo	
3,207,155	A		9/1965	Casey	
3,220,410	A		11/1965	Sloan	
3,283,545	A		11/1966	Simon	
3,294,086	A	*	12/1966	Nelkin	602/19
3,459,181	A	*	8/1969	Mann	602/67
3,496,576	A	*	2/1970	Artzt	2/402
3,499,442	A	*	3/1970	Steinmetz	602/67
3,499,443	A		3/1970	Scheerer	
3,511,234	A		5/1970	Larson	
3,517,666	A	*	6/1970	Atlee	602/68
3,621,846	A		11/1971	Lehman	
4,009,495	A		3/1977	Faust	
4,173,976	A		11/1979	Bloomquist et al.	
4,195,630	A		4/1980	Connery et al.	

(Continued)

Primary Examiner — Katherine Moran
Assistant Examiner — Richale L Quinn
(74) *Attorney, Agent, or Firm* — Blakely, Sokoloff, Taylor & Zafman, LLP

(57) **ABSTRACT**

An underwear garment for use by a male, that is, a person having a penis and a scrotum, may be characterized as including a genital pouch and a pair of side panels collectively formed in a mid-section of a front wall depending from a waistband so as to bisect said front wall. The pouch may be pear-shaped when viewed from the front. A lower extremity of the pouch extends under and rearwardly of the front wall so as to form a perineum portion for covering rearwardly past the scrotum and to the perineum of the user. The pouch also has a phallus supporting portion extending forwardly of a plane generally containing the front wall and forming therein an apex portion for containing the head of the penis of the user when the penis is hanging at rest. The pouch also has a scrotum supporting portion extending from and between the phallus supporting portion and the perineum portion for containing at least a portion of the scrotum of the user.

11 Claims, 13 Drawing Sheets

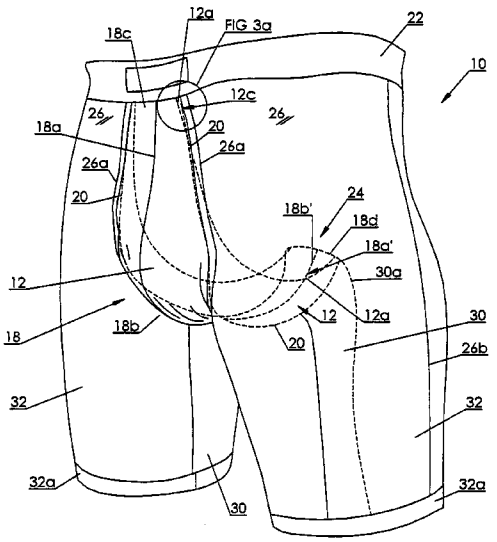

U.S. PATENT DOCUMENTS

4,377,008	A		3/1983	Jung	
4,414,971	A		11/1983	Chung	
4,554,685	A	*	11/1985	Ray	2/403
4,660,551	A		4/1987	Nishimura	
4,702,239	A		10/1987	Ichikawa	
4,759,355	A		7/1988	Thrower	
4,870,958	A		10/1989	Webster	
4,955,088	A		9/1990	Terjesen	
5,029,345	A	*	7/1991	Angheluta et al.	2/403
5,070,869	A		12/1991	Zhang	
5,157,793	A		10/1992	Michels	
5,226,179	A		7/1993	Choi	
5,237,706	A		8/1993	Nalbandian	
5,283,912	A		2/1994	Chung	
5,379,462	A	*	1/1995	Morgan et al.	2/403
5,461,729	A		10/1995	Brocks	
5,524,298	A		6/1996	Plunkett	
5,547,466	A		8/1996	McRoberts et al.	
5,598,587	A		2/1997	Wada	
5,647,065	A		7/1997	Richerson	
5,718,003	A		2/1998	Gwinn	
5,807,299	A		9/1998	McRoberts et al.	
5,870,779	A		2/1999	Heron	
5,875,495	A	*	3/1999	Thrower	2/403
5,978,971	A		11/1999	Wald	
6,026,517	A		2/2000	Kang	
6,038,703	A		3/2000	Chung	
6,061,840	A		5/2000	Alligator	
6,245,036	B1		6/2001	McRoberts et al.	
6,289,520	B1	*	9/2001	Page	2/403
6,295,651	B1		10/2001	Kang	
6,308,342	B1		10/2001	Qi	
6,353,940	B1		3/2002	Lyden	
6,487,728	B1		12/2002	Cook	
6,799,334	B2		10/2004	Yu	
6,820,284	B2		11/2004	Horikoshi et al.	
6,862,746	B2		3/2005	Cym et al.	
6,901,607	B1		6/2005	Elwell	
D509,945	S		9/2005	Ogle	
7,017,193	B2		3/2006	Auger	
7,024,703	B1		4/2006	Della Ratta	
7,065,797	B1		6/2006	Chen	
7,178,174	B2	*	2/2007	Soderstrom	2/403
7,198,688	B2	*	4/2007	Mortell et al.	156/160
7,631,369	B2	*	12/2009	Geiwald et al.	2/403
7,676,853	B1	*	3/2010	Cutlip	2/403
2005/0268380	A1		12/2005	Sovell	
2006/0000008	A1		1/2006	Chong	
2006/0005301	A1		1/2006	Taylor	
2006/0162052	A1	*	7/2006	Stankowski et al.	2/403
2007/0180600	A1		8/2007	Allemann et al.	
2007/0192941	A1	*	8/2007	Soderstrom	2/403
2007/0245463	A1	*	10/2007	Kang	2/403
2008/0178368	A1	*	7/2008	Clark	2/403

* cited by examiner

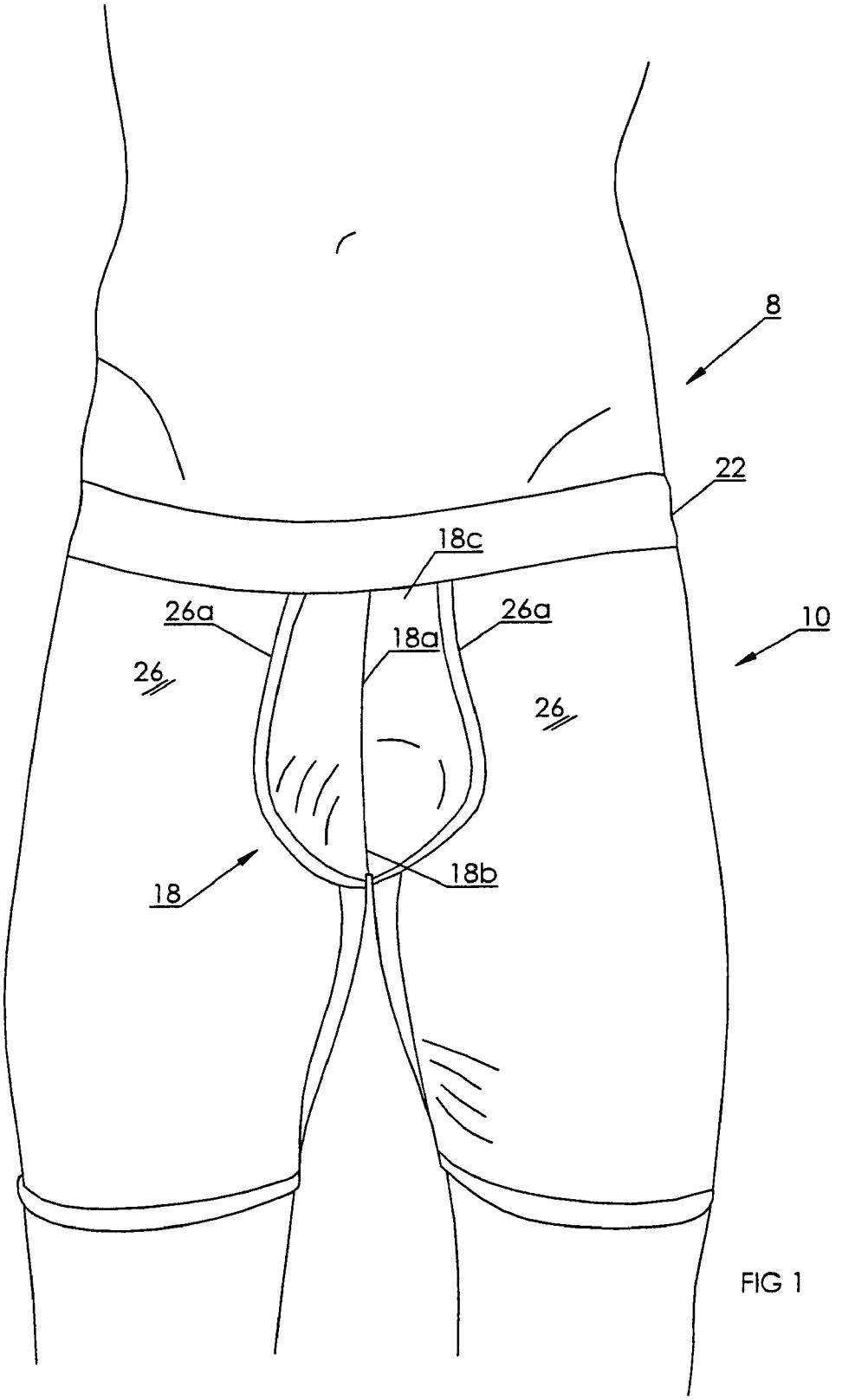

FIG 1

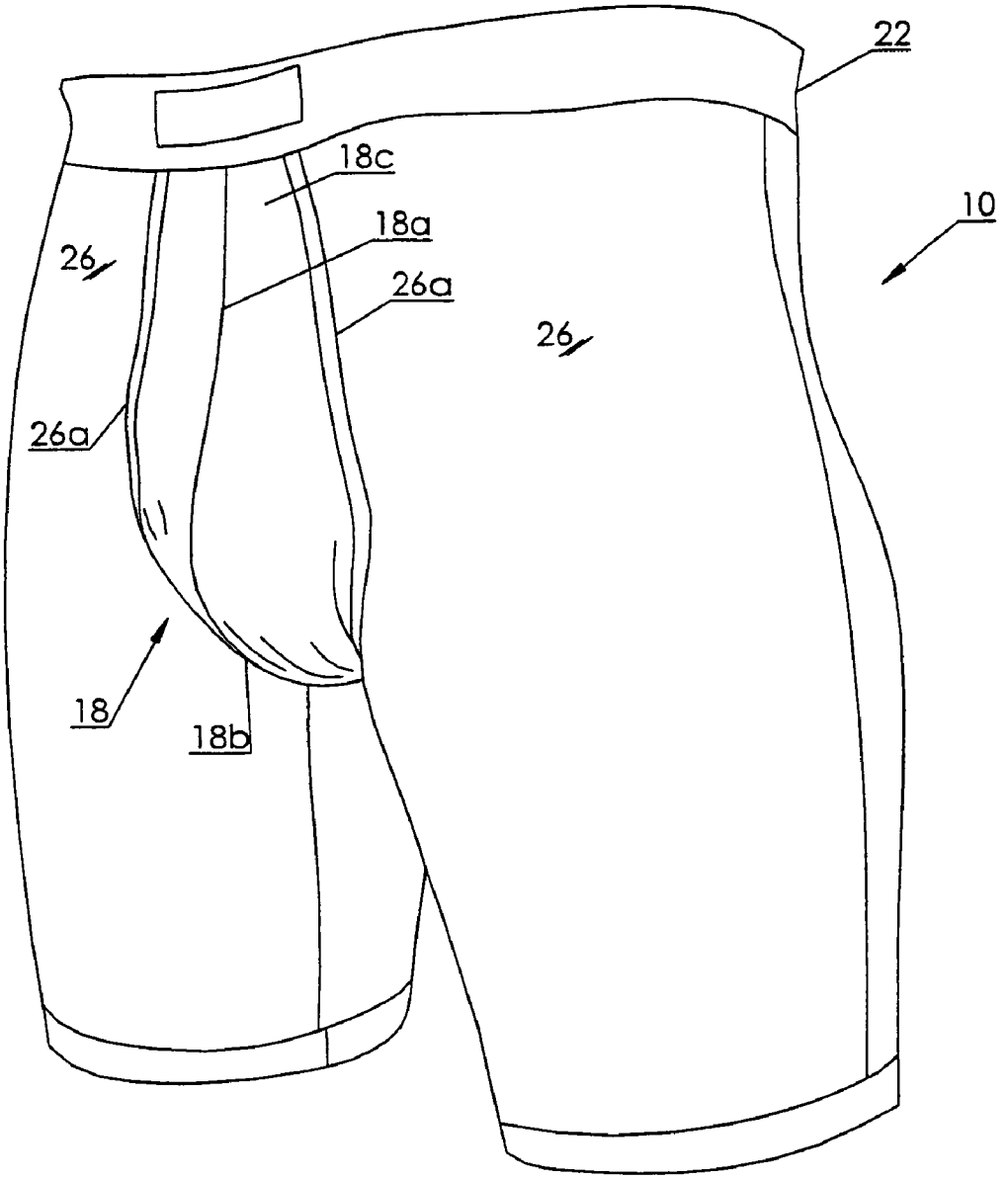

FIG 2

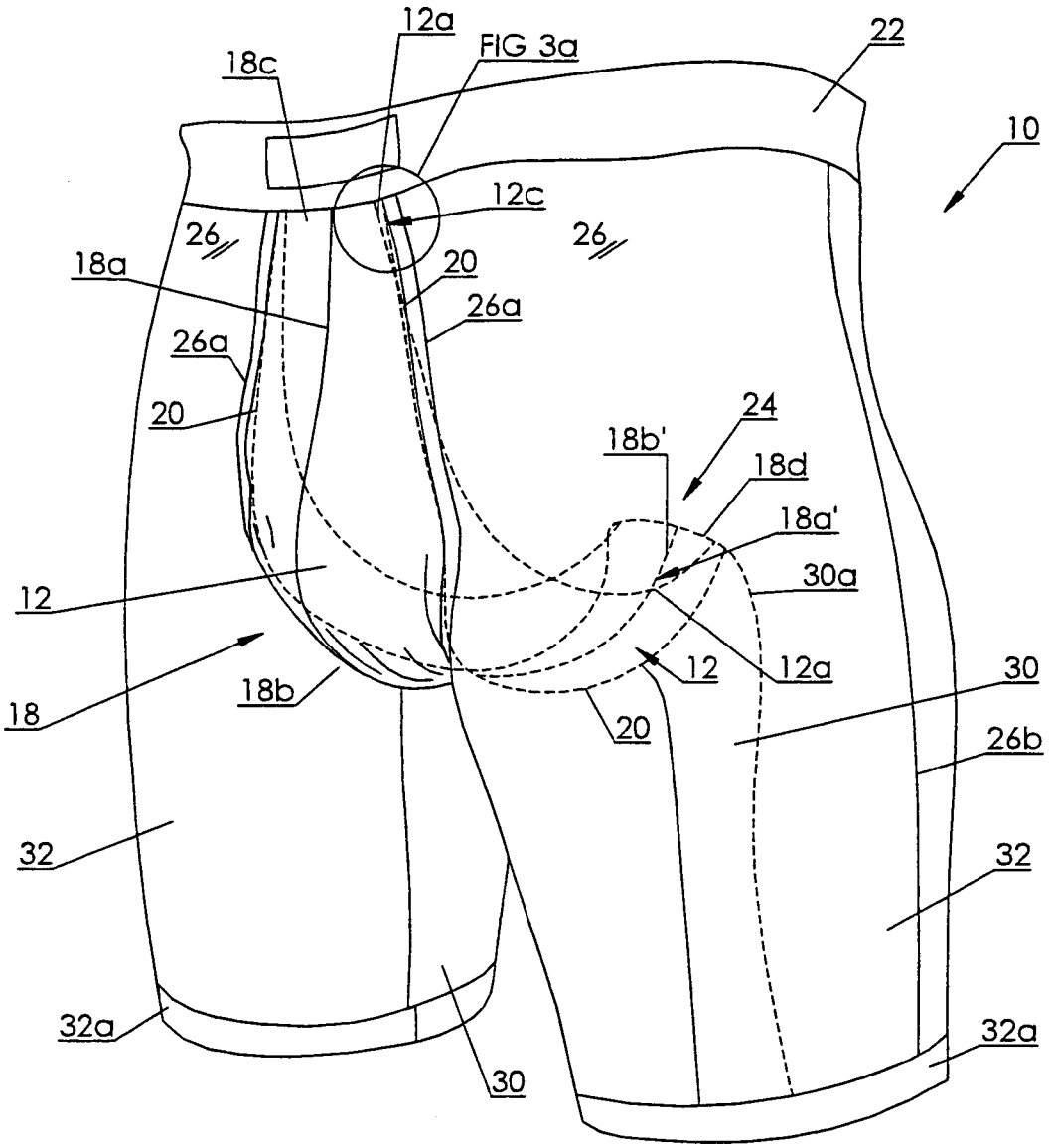
12a
FIG 3a
22
18c
10
12c
26
26
18a
20
26a
26a
20
24
18b'
18d
18a'
30a
12
12
12a
30
18
18b
20
26b
32
32
32a
32a
30

FIG 3

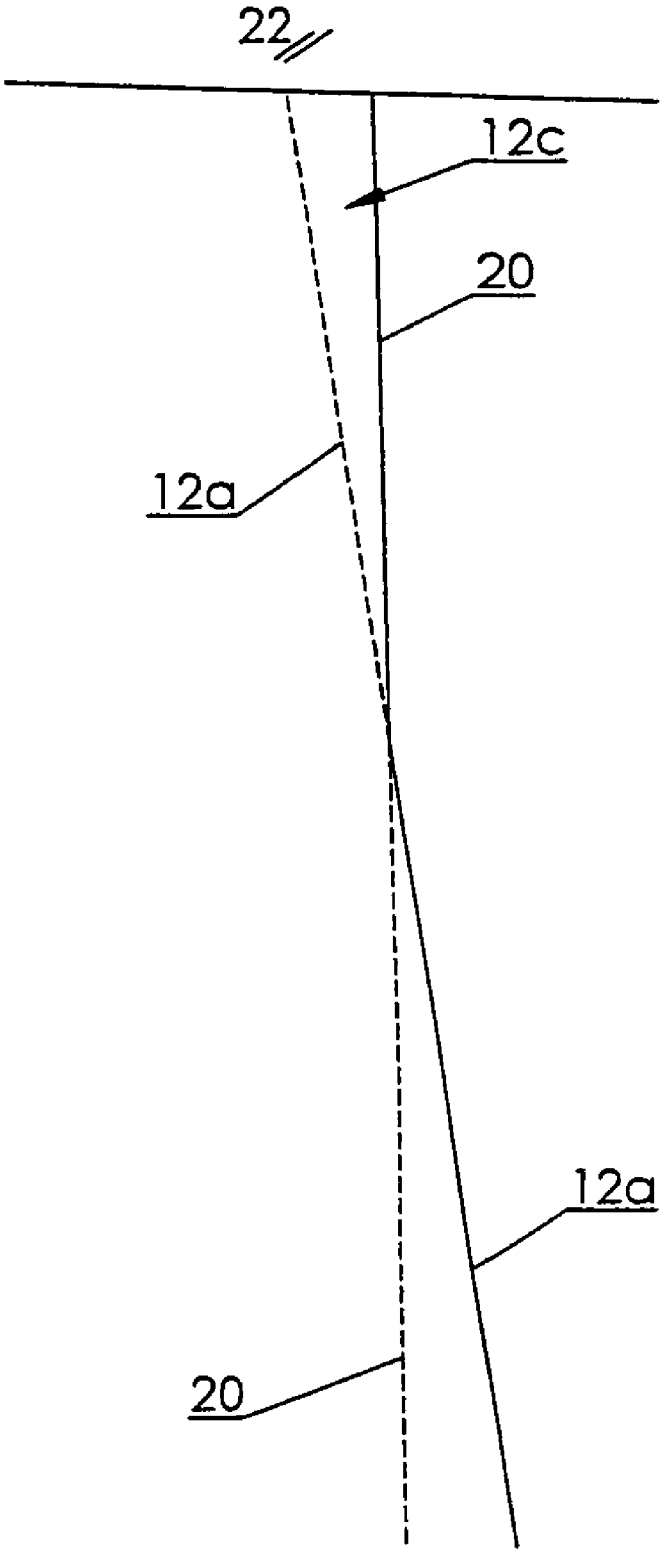

FIG 3a

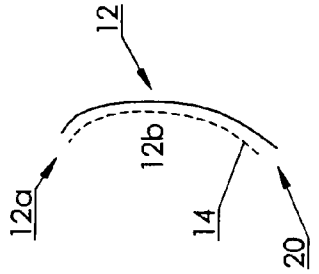

FIG 5

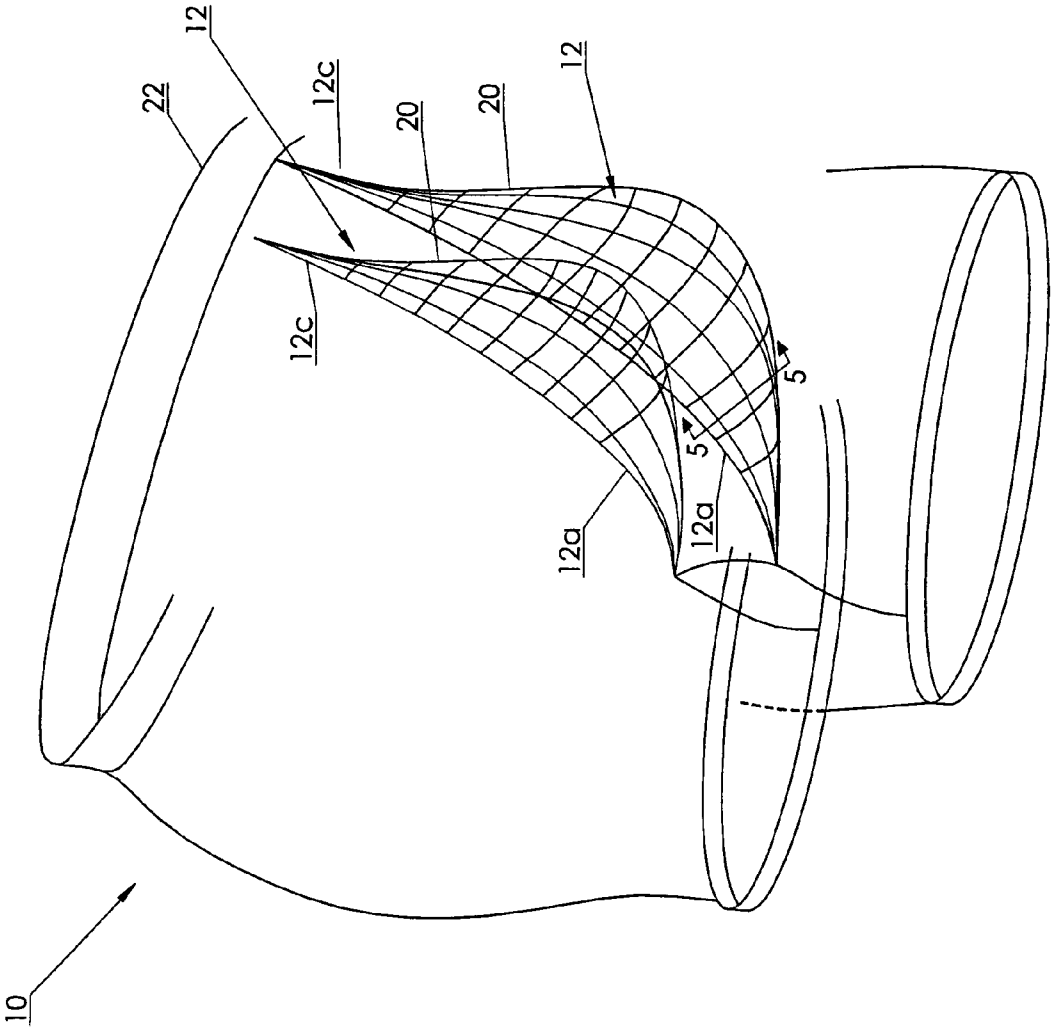

FIG 4

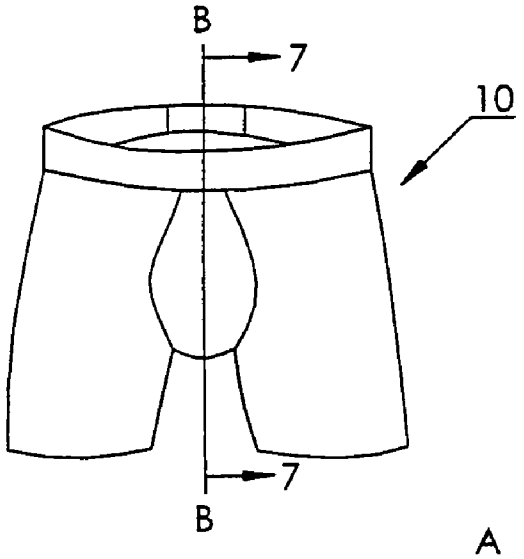
B
7
10
7
B

FIG 6

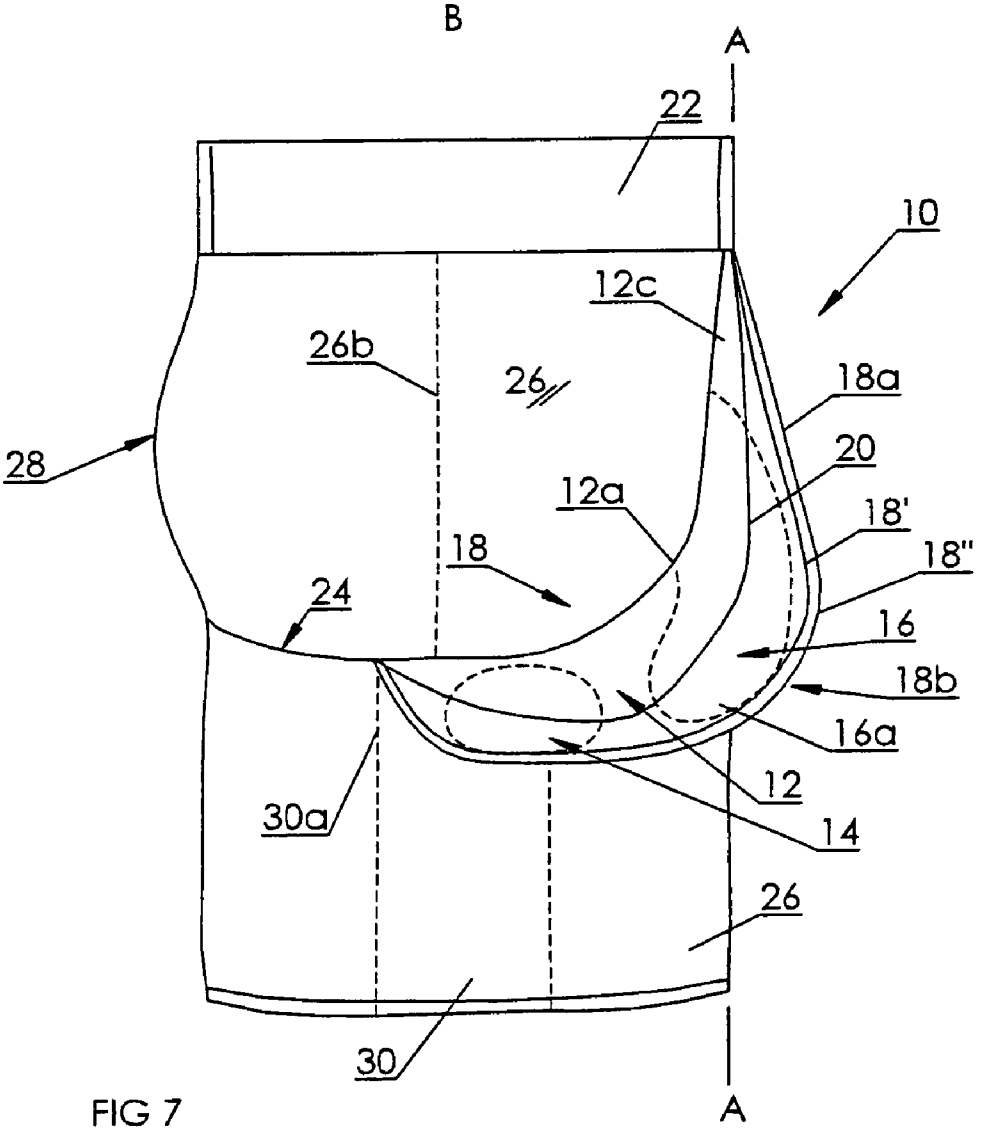
A
22
10
12c
26b
26
18a
28
20
12a
18'
18
18"
24
16
18b
16a
12
30a
14
26
30
A

FIG 7

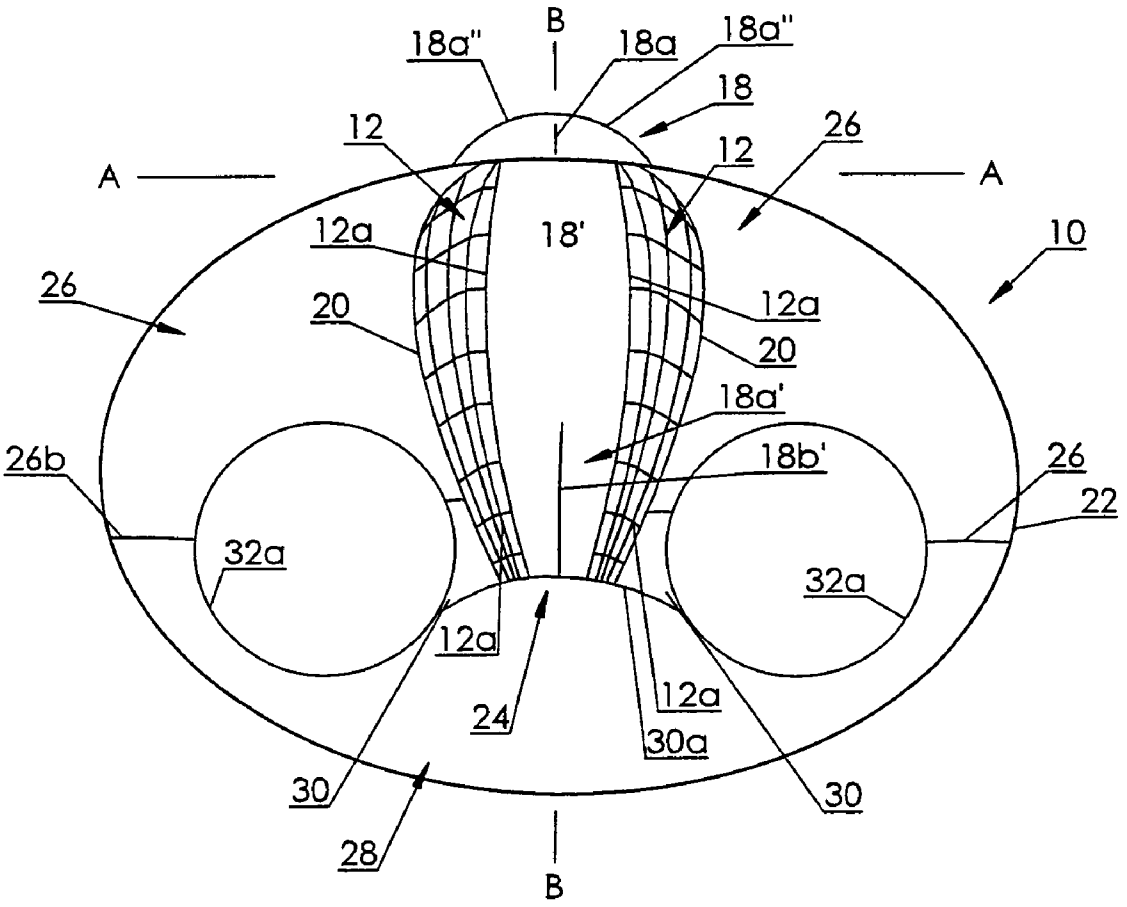
B
18a"
18a
18a"
18
12
26
12
A
A
12a
18'
10
26
20
12a
20
18a'
26b
18b'
26
22
32a
32a
12a
12a
24
30a
30
30
28
B

FIG 8

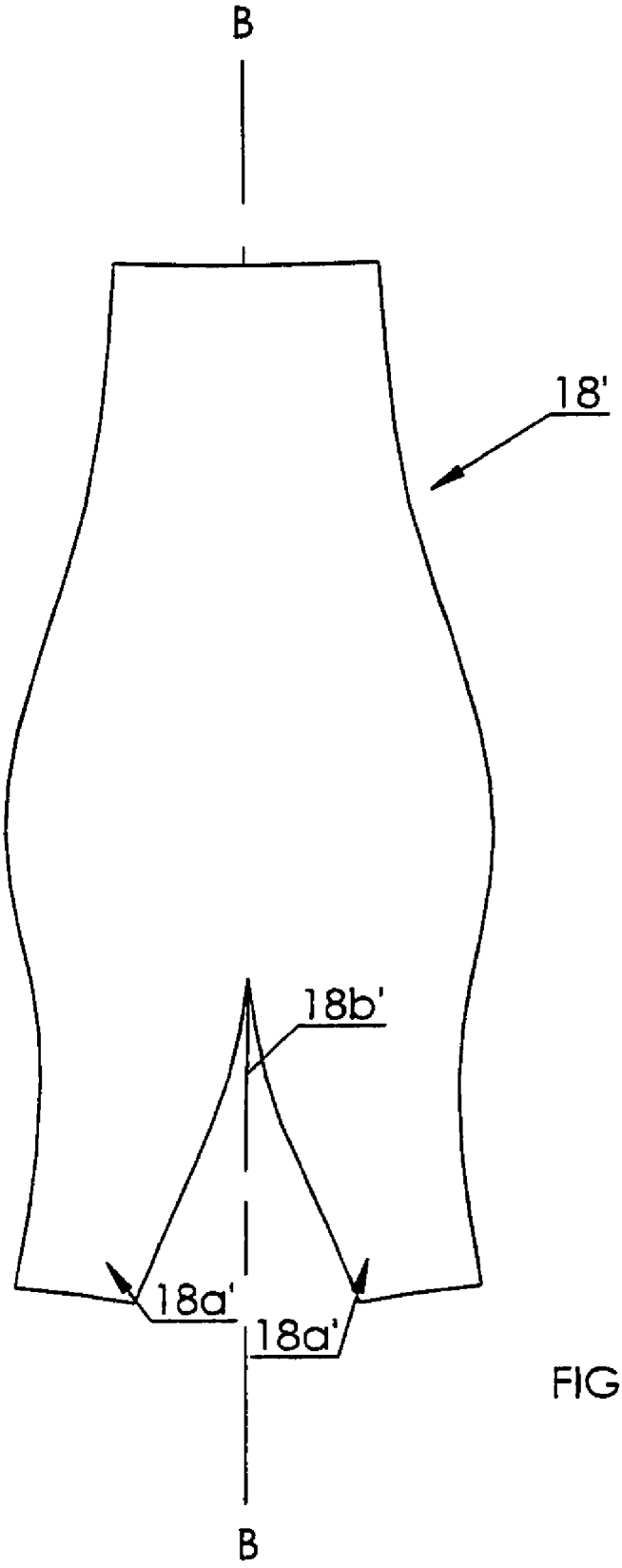

FIG 9

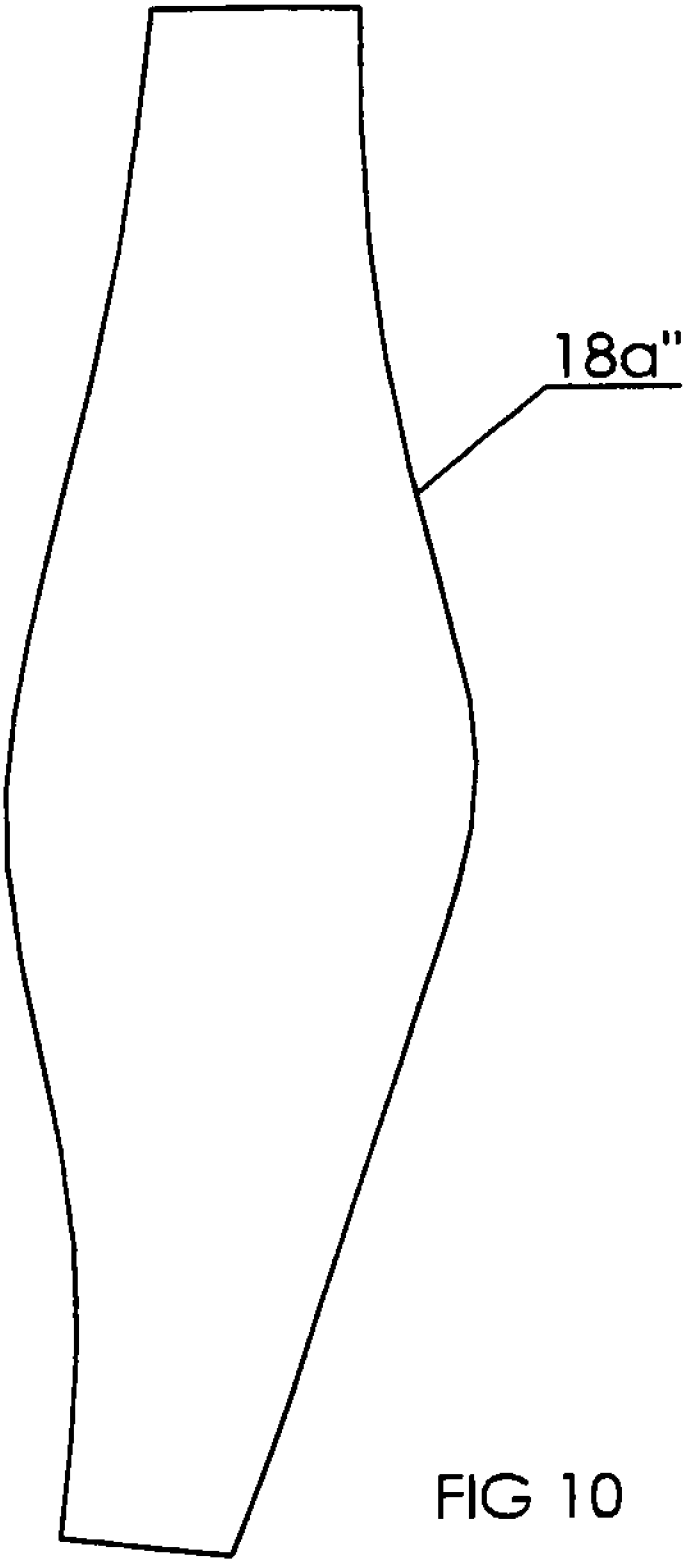

FIG 10

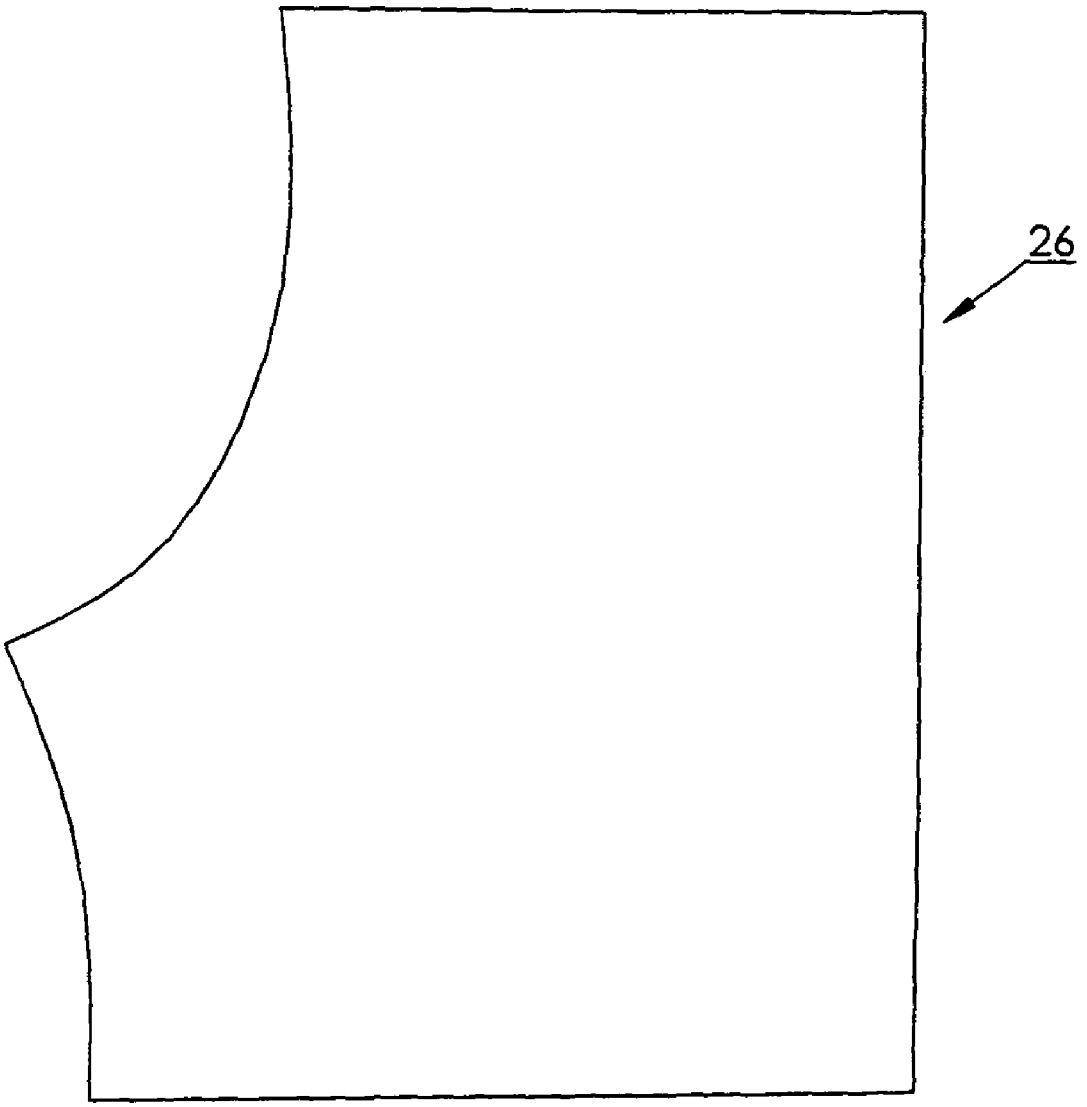

FIG 11

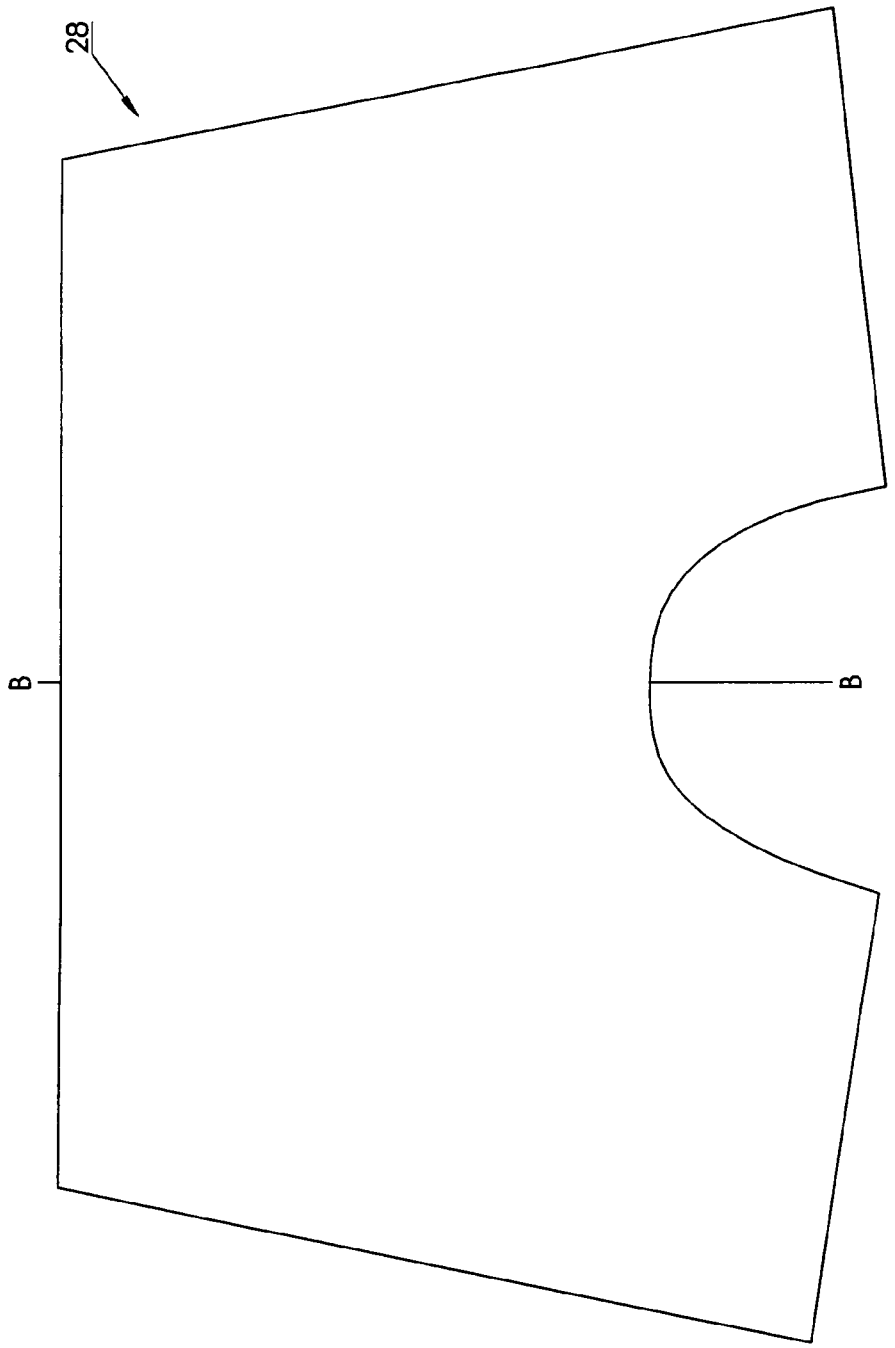

FIG 12

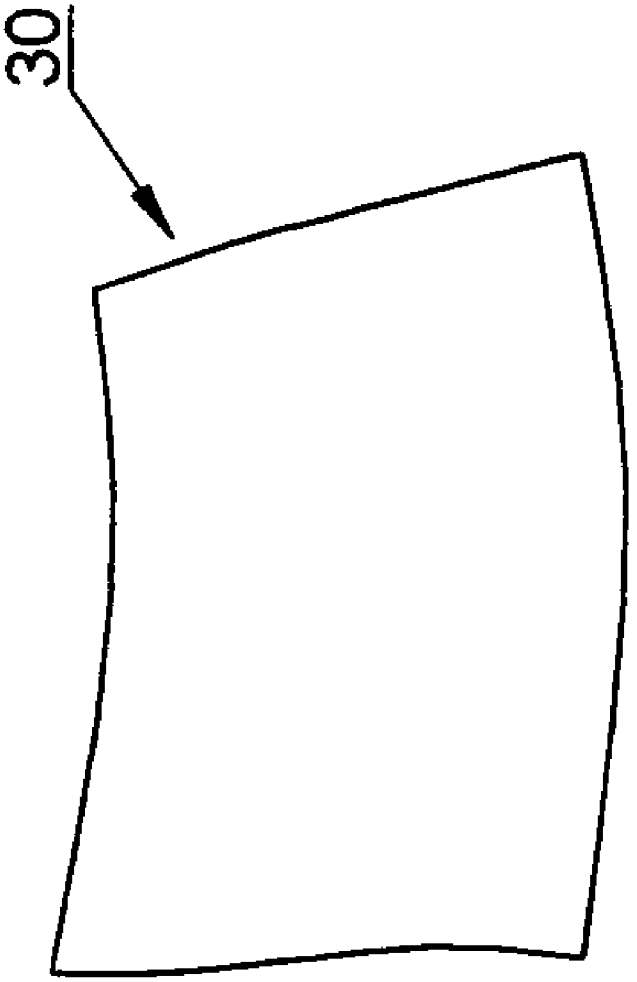

FIG 13

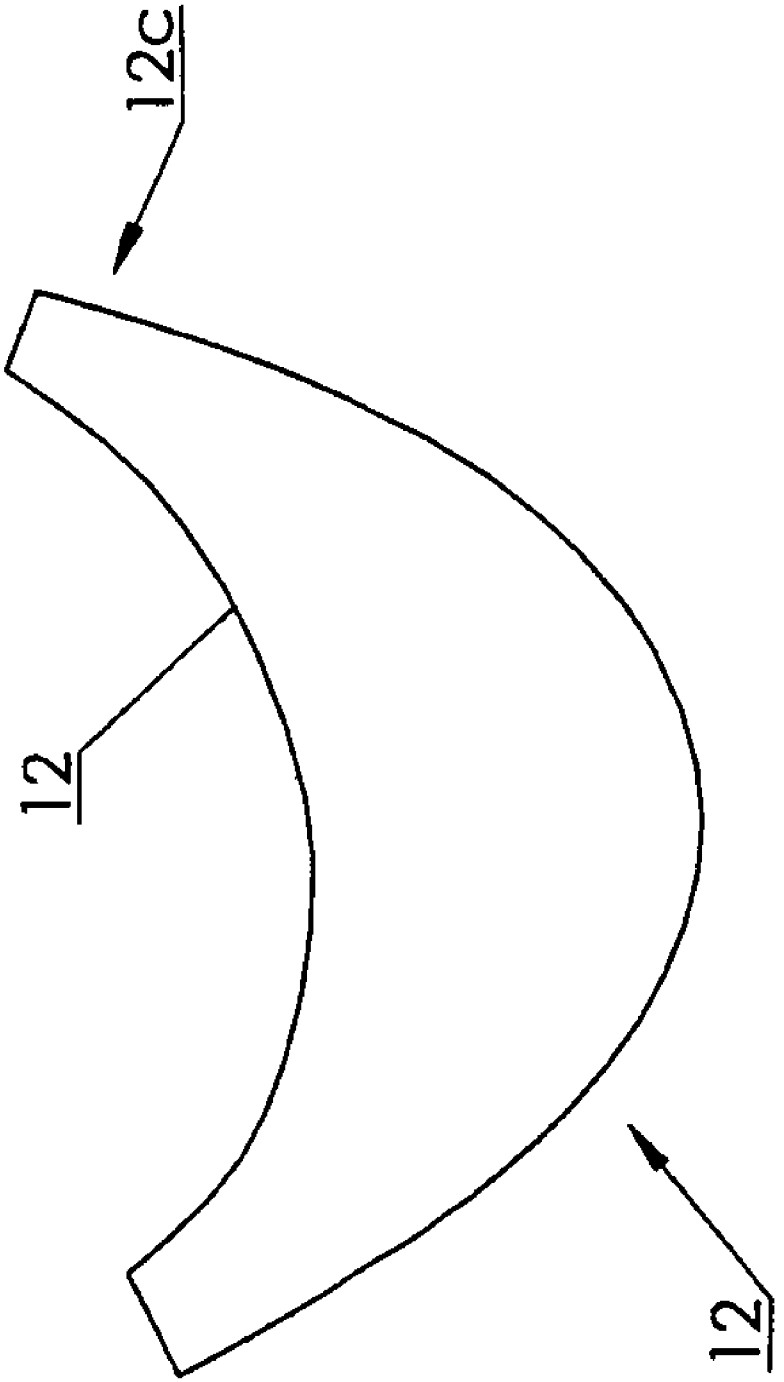

FIG 14

UNDERWEAR GARMENT FOR A MALE

CROSS REFERENCE TO RELATED APPLICATION

This application claims priority from U.S. Provisional Patent Application No. 60/886,545 filed Jan. 25, 2007 entitled Underwear Garment for a Male.

FIELD OF THE INVENTION

This invention relates to the field of men's undergarments generally, and in particular to an undergarment having an improved pouch and sidewalls for supporting genitalia and decreasing irritation due to skin-to-skin friction and chaffing.

BACKGROUND OF THE INVENTION

Men's underwear typically suffers from several deficiencies, including but not limited to, a propensity for the scrotum to contact and stick to the inner thigh and a high degree of contact between the inner thighs of the wearer which can lead to friction, chaffing, and discomfort while sitting, walking, running, or skating or other numerous athletic activities, a lack of support for the genitalia, limited freedom of movement and natural resting position for the genitalia and a lack of moisture control.

Various underwear designs in the prior art have tried to address one or more of these problems. For example, sports boxer-briefs are typically tight and form-fitting resulting in compressing the genitalia. However, they support the scrotum too close to the body leading to any combination of scrotum contact with inner thighs and legs, and moisture problems resulting from perspiration and skin irritation. Typical loose fitting boxer shorts provide ample freedom of movement but suffer from a propensity for the scrotum to contact and stick to the inner thigh, and lack of support and comfort. Further, the prior art typically does not use performance fabrics as those fabrics are better described below. Typical underwear briefs prevent the scrotum from contacting with the legs, but suffer from unnaturally restricting the genitalia into a small compartment pressing with an unnaturally close proximity to the body with the resultant increase in moisture problems and lack of comfort. To date, no underwear product has successfully addressed the problem of a lack of isolation of scrotum from contacting inner thighs and legs while increasing comfort and support attributes for male genitalia.

In the prior art applicant is aware of U.S. Pat. No. 5,029,345 which issued to Angheluta, et al, on Jul. 9, 1991, entitled Man's Underwear with an Integral Codpiece-like Construction. Angheluta discloses a man's garment, particularly a man's underwear garment, providing a codpiece compartment secured to a front of a trunk panel of the garment. The trunk panel provides an opening for communicating a man's genitals therethrough into the codpiece compartment. The compartment loosely holds the man's genitals. The trunk panel and a slot **24** provides for forward biasing and separation of the genitals by constricting of the sides of the slot behind the testicles and heat insulation to reduce the thermal influence of the man's torso on the man's reproductive organs. Angheluta describes the use of compartment **40** which is a loose fitting compartment around the genitals, it being taught that such a loose fitting compartment prevents compression of the genitals against the male's lower trunk, such as occurs in shorts known to the art, and that by properly selecting the lengths of the front, right and left side panels **32**, **38**, and **36** a suitably loose compartment **40** is formed. Angheluta concludes that by reducing compression of the genitals against the trunk, the thermal influence of the trunk to the genitals is reduced, and pressure on the genitals is reduced.

SUMMARY OF THE INVENTION

The present invention provides a solution to the above by addressing the issues of scrotum independence from inner legs, and improved comfort and support. The underwear garment is designed using a specifically shaped breathable pouch which includes elasticized breathable wicking mesh material side panels to isolate the scrotum and phallus from the legs and which wick away moisture and provides superior comfort. Thus the undergarment of the present invention includes an internal double side-panel containment system and an anatomical pouch compartment, and the use of light internal fabric and moisture control athletic performance fabrics.

In summary, the underwear garment according to the present invention, and for use by a male, that is, a person having a penis and a scrotum, may be characterized as including a genital pouch and a pair of side panels collectively formed in amid-section of a front wall depending from a waistband so as to bisect said front wall. The pouch may be pear-shaped when viewed from the front. A lower extremity of the pouch extends under and rearwardly of the front wall so as to form a perineum portion for covering rearwardly past the scrotum and to the perineum of the user. The pouch also has a phallus supporting portion extending forwardly of a plane generally containing the front wall and forming therein an apex portion for containing the head of the penis of the user when the penis is hanging at rest. The pouch also has a scrotum supporting portion extending from and between the phallus supporting portion and the perineum portion for containing at least a portion of the scrotum of the user.

The side panels are a pair of laterally spaced apart, substantially parallel side panels forming upwardly from adjacent the perineum generally vertical extending scrotum fences towards the waistband. The side panels are spaced so as to snugly engage sides of the scrotum and to substantially completely cover over and support the sides of the scrotum and to extend upwardly into a fold along a lowermost aspect of the abdomen of the user formed between the scrotum and the inner thighs of the user so as to substantially entirely cover exposed thigh skin in the fold exposed for rubbing against scrotum skin in the fold.

Advantageously the side panels are formed as opposed facing concavities so as to cup the scrotum and the side panels and pouch are formed of elasticized breathable wicking mesh. The side panels may be scimitar-shaped when viewed from the side so as to form, along with the pouch, the scrotum supporting portion as a crescent half-moon-shaped basket.

Further advantageously, the pouch has an inner lining which is smooth and seamless over a central penis-covering portion thereof, and the concavities of the side panels are formed at least in part by folding laterally inwardly and stitching uppermost ends of the side panels so as to fold over an uppermost edge of the side panels. In one embodiment this is done where the side panels extend up to the waistband, and where the pouch also extends between the side panels substantially up to the waistband.

BRIEF DESCRIPTION OF THE DRAWINGS

FIG. **1** is, in front elevation view, a pair of the briefs according to one embodiment of the present invention being worn by a male user.

FIG. **2** is, in right side perspective view, the briefs of FIG. **1**.

FIG. **3** is, the briefs of FIG. **2**, showing the side panels of the genitalia containing pouch in dotted outline.

FIG. **3***a* is an enlarged view of a segment of FIG. **3** showing the inwardly folded overlap of the upper edge of one of the side panels of FIG. **3**.

FIG. **4** is, in partially cut-away left perspective view, the briefs of FIG. **3** showing a diagrammatic illustration of the side panels.

FIG. **5** is a cross-sectional view along line **5-5** in FIG. **4**.

FIG. **6** is a front view of the briefs of FIG. **2** illustrating a vertical axis of symmetry and bisecting the briefs.

FIG. **7** is a sectional view along line **7-7** in FIG. **6**.

FIG. **8** is, in plan view, the brief of FIG. **2**.

FIG. **9** is a diagrammatic plan view of a pattern template for the inner liner of the pouch of the briefs of FIG. **4**.

FIG. **10** is a diagrammatic view of a pattern template of a left front segment of an external layer of the pouch of FIG. **4**.

FIG. **11** is a diagrammatic view of a pattern template of a front panel of the briefs of FIG. **4**.

FIG. **12** is a diagrammatic view of a pattern template of a rear panel of the briefs of FIG. **4**.

FIG. **13** is a diagrammatic view of a pattern template of a gusset of the briefs of FIG. **4**.

FIG. **14** is a diagrammatic view of a pattern template of one of the side panels of the briefs of the present invention.

DETAILED DESCRIPTION OF EMBODIMENTS OF THE INVENTION

With reference to the accompanying drawings wherein similar characters of reference denote corresponding parts in each view, a conventional pair of so-called boxer style briefs **10** are modified in the present invention by adding interior side-panels **12**, preferably constructed of an elasticized breathable mesh fabric, for the purpose of isolating the genitalia, in particular scrotum **14** and phallus **16** (shown diagrammatically in dotted outline in FIG. **7**), into the pouch compartment **18**, thereby isolating the genitalia from contacting the inner thighs and legs of the user **8** wearing the briefs.

As seen in the interior of briefs **10**, side panels **12** are formed of two separate and substantially parallel pieces of mesh fabric attached to the laterally spaced apart pouch seams **20**.

The side panels **12** form a pair of generally parallel fences which extend upwardly from, and along, seams **20** so as to extend their uppermost edges **12***a* upwardly substantially completely into the crack or fold between the laterally outer sides of scrotum **14** and the top of the inner thighs, that is, along the fold of skin where the top of the inner thighs join the top of the scrotum along a lower-most aspect of the abdomen of user **8**. This joint, where the inner thighs and scrotum join along a fold line, is defined generally by both the shape and the location when worn of the upper-most arcuate edges **12***a* of side panels **12**. The side panels are preferably thin sheets of elasticized breathable wicking mesh knit, one sheet per panel and form a substantially parallel pair of opposed wicking fences which are positioned unobstructively substantially completely up into the fold line between the scrotum and inner thigh to thereby inhibit chaffing and to draw moisture away from where there would ordinarily be skin-to-skin contact and rubbing. Side panels **12** provide for an enlarged moisture evaporation surface area on the wicking material as relative movement between the thighs and scrotum, for example due to athletic activity, draws cooler air upwardly into the brief or otherwise through the brief material so as to flow over the wicking material, evaporating moisture wicked from the fold and thereby providing cooling or the sensation of cooling. The two side panels **12** thus separate the scrotum **14** from contacting the inner thighs and legs of the user, such separation extending from the waistband **22** to the perineum area **24** which extends under the buttocks of user.

The pair of side panels **12** are preferably formed so as to cup the genitalia, that is, are formed so as to be cupped in laterally opposed facing relation to inhibit skin-to-skin contact between a user's thighs and scrotum. Although positioned to extend generally orthogonally inwardly from the front of the brief, for example where the front of the brief is defined by plane A which generally contains the pair of pouch seams **20**, the laterally outward curvature of the side panels may be described as convex, for example as seen in the cross-section of FIG. **5**. Those oppositely disposed convexities of course define an opposed facing pair of genitalia-supporting concavities **12***b* which, because of the flexibility and elasticity of the mesh side panel material, mould to gently conform to the shape of scrotum **14** in particular and allow for resiliently supported relative movement of the scrotum relative to the pubis and perineum **24** of user **8**, side panels **12** resiliently cradling and biasing the scrotum back into its naturally resting position symmetrically depending below the pubis and base of the penis **16**. As better seen in FIG. **3**, in one embodiment the concavities **12***b* of side panels **12** are formed by folding over inwardly, and stitching with the fold-over in place, the upper ends **12***c* of side panels **12** where side panels **12** are stitched to the front walls **26** and waistband **22** of brief **10**.

The performance material used advantageously in the side panels of the present invention is a soft elasticized breathable mesh knit weave (in a so-called four-by-four stretch weave) containing 80% Nylon™ and 20% Spandex™. Pouch **18** may be of a material containing 82% polyester and 18% Spandex™. In one embodiment, the balance of brief **10** is of the same material, however in an alternative embodiment, the balance of brief **10** is made of a 92% cotton, 8% Spandex™ fabric. The material of the side panels and pouch provide the intended isolating function while improving comfort, airflow, and support for the scrotum. The mesh fabric is light and soft to reduce discomfort and improve feel for the scrotum and phallus while in contact with fabric and garment design in the sensitive groin area including the genitalia. Thus, in embodiments where pouch compartment **18** has at least two layers of material (an inner layer **18'** and an outer layer **18"**), seam **18***a* is formed along the medial plane B (orthogonal to plane A containing where seams **20** run along front walls **26**) in the outer layer of material **18"**, and inner liner **18'** is positioned behind outer layer **18"** so as to be adjacent the genitalia. In a preferred embodiment, inner liner **18'** does not have a seam in contact with phallus **16**, and preferably not in contact with the head **16***a* of the phallus. Rather, the front of inner liner **18'** is one continuous soft, light piece of the above mentioned elasticized mesh material extending continuously from and between its laterally opposite seams **26***a*. Thus the apex point, generally indicated at **18***b*, of the portion of the pear-shaped pouch **18** containing the head **16***a* of the penis, does not have vertical or other seam closely adjacent to irritate the head **16***a*. As seen in FIG. **9**, inner liner **18'** has at its rearmost end, that is, adjacent perineum **24**, a pair of divergent tails which when joined along seam **18***b*' form a shelf-like tableau or plateau **18***a*' cradling the underside of scrotum **14**. Forward of tableau **18***a*' inner liner **18'** is seamless so as to not irritate head **16***a* of phallus **16** when resting naturally at apex point **18***b*. Thus it will be seen also that one advantage of using a boxer-style brief is that the boxer-style provides improved room in the front for forming the pouch compartment, as compared to more constrictive styles of brief which pull relatively tightly in over the genitals.

Pouch compartment **18** and side panels **12** together more closely resemble the natural setting of the genitalia and contours for isolation of the scrotum and support. The pouch offers the following design features:

a) pouch **18** is shaped to provide maximum volume and support for genitalia, while promoting the natural positioning of genitalia, for improved air circulation and temperature control;

b) pouch **18** is anatomically shaped to allow scrotum **14** and phallus **16** to rest naturally; and

c) pouch **18** utilizes elasticized mesh fabric to wick away moisture.

Viewed from the exterior of the pouch from compartment **18** appears bordered laterally by a pair of opposed facing curved (for example convex shaped) seams **26***a* bordered at the upper end **18***c* by waistband **22** and at the lower, rearmost end **18***d* by perineum area **24** adjacent the posterior perineum. The pouch exterior center seam **18***a* tracks from the waistband to the posterior perineum along the vertical plane B bisecting pouch compartment **18** and intersecting apex **18***b* of volume at the front point, specifically at an angle and location where the head **16***a* of the phallus **16** would most naturally rest. The sides of the exterior of pouch compartment **18** are defined by parallel seams **26***a* which track from the waistband **22** to the perineum area **24**.

The pear-shape of pouch compartment **18**, as viewed from the front and defined by seams **26***a*, which start at the waistband **22** and end near to the posterior perineum, create greater rear pouch volume in pouch compartment **18**, increasing the depth and resulting in more area for the scrotum to hang naturally, while providing the cradle-like support on the shelf-like tableau **18'** formed by the closing of seam **18***b'* of inner liner **18'**. The width from the lateral exterior seams **26***a* to the center seam **18***a* optimizes a maximal volume while maintaining support. The apex **18***b* is situated to most fully accommodate the head **16***a* of the phallus **16**.

The side panels **12** and the interior and exterior layers **18'** and **18"** respectively of pouch compartment **18** advantageously may share the interior seams **20** which create the pouch shape that is, seams **20** and **26***a* are coincident. The cooperation of the side-panels and pouch shape and construction serves to:

a) further enhance the cradle-like support of the garment through the opposed facing convex shape seam orientation of seams **26***a;*

b) contain the genitalia while inhibiting contact between the fabric and the skin;

c) further accentuate the volume and freedom of movement within pouch compartment **18** while inhibiting the genitalia from escaping pouch compartment **18**.

As seen in the diagrammatic representations of fabric pattern templates used in the construction of brief **10** and as seen in FIGS. **9-14**, as described above, inner liner **18'** lies between front panels **26** and is bisected by plane B. Inner liner **18'** is encased in left and right front segments **18***a***"** of which FIG. **10** is an illustration of a left front segment when viewed from the front of briefs **10**, the right front segment **18***a***"** being the mirror image thereof. An illustration of an example of a right front panel **26** is seen in FIG. **11**. An illustration of a rear panel **28** is seen in FIG. **12**. Front panels **26** are joined to rear panel **28** along seams **26***b*. An illustration of one of the pair of left and right gussets **30** is seen in FIG. **13**, the opposite gusset **30** being the mirror image thereof . Gussets **30** extend laterally from the rearmost end of pouch compartment **18**, where they share a common seam **30***a* and extend laterally down the oppositely disposed legs **32** so as to terminate at legbands **32***a*, it being understood that the length of gussets **30** will of course depend on the length of legs **32**. An example of the side panel **12** is illustrated in FIG. **14**.

As will be apparent to those skilled in the art in the light of the foregoing disclosure, many alterations and modifications are possible in the practice of this invention without departing from the spirit or scope thereof. Accordingly, the scope of the invention is to be construed in accordance with the substance defined by the following claims.

What is claimed is:

1. For wearing by a user having a penis, a scrotum, and a perineum an underwear garment comprising:

a waistband, and a front wall depending downwardly from the front thereof,

a genital pouch formed in a mid-section of said front wall so as to bisect said front wall, said pouch pear-shaped when viewed from the front and having a lower extremity thereof which extends under and rearwardly of said front wall so as to form a perineum portion for covering past the scrotum and to the perineum of the user when worn by the user,

said pouch having a phallus supporting portion extending forwardly of a plane generally containing said front wall and forming therein an apex portion for containing a head of the penis of the user when the penis is hanging at rest,

said pouch having a scrotum supporting portion extending from and between said phallus supporting portion and said perineum portion for containing at least a portion of the scrotum of the user,

a pair of laterally spaced apart, separate and substantially parallel side panels forming upwardly from adjacent the perineum generally vertical extending scrotum fences towards said waistband, spaced so as to snugly engage sides of the scrotum and to substantially completely cover over and support the sides of the scrotum and to extend upwardly into a fold along a lowermost aspect of the abdomen of the user formed between the scrotum and the inner thighs of the user so as to substantially entirely cover exposed thigh skin in the fold exposed for rubbing against scrotum skin in the fold.

2. The garment of claim **1** wherein said side panels are formed as opposed facing concavities so as to cup the scrotum.

3. The garment claim **2** wherein said side panels are formed of wicking mesh.

4. The garment of claim **3** wherein said mesh is elasticized.

5. The garment of claim **4** wherein said side panels are scimitar-shaped when viewed from the side so as to form with said pouch said scrotum supporting portion as a crescent half-moon-shaped basket.

6. The garment of claim **5** wherein said pouch is formed of elasticized mesh.

7. The garment of claim **6** wherein said pouch has an inner lining which is smooth and seamless over a central penis-covering portion thereof.

8. The garment of claim **2** wherein said concavities are formed at least in part by being folded laterally inwardly and uppermost ends of said side panels being stitched so as to fold over an uppermost edge of said side panels.

9. The garment of claim **2** wherein said side panels extend substantially up to said waistband.

10. The garment of claim **9** wherein said pouch extends between said side panels substantially up to said waistband.

11. The garment of claim **1** wherein said side panels extend upwards so as to contact said waistband.

* * * * *