Tommy John, Inc., Petitioner, v. Pakage Apparel, Inc., Patent Owner

IPR No. IPR2024-01163
Patent 10,834,974

PAKAGE APPAREL, INC.

Source: POR at 2; https://www.bn3th.com/pages/innovation

PAKAGE APPAREL, INC.

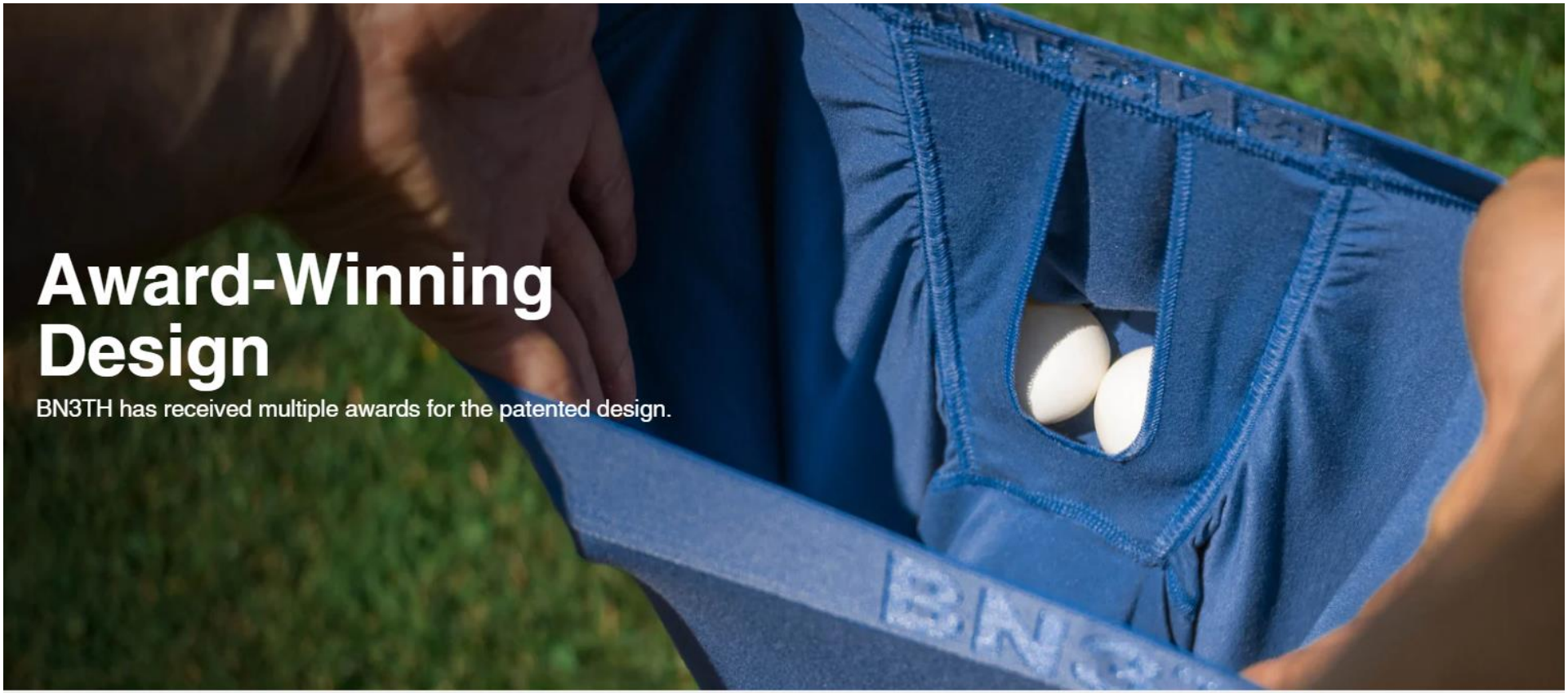

ISPO Award 2022 Winner

GOOD DESIGN

DESIGN AWARD 2021

Source: POR at 2; https://www.bn3th.com/pages/innovation

’974 PATENT - PAKAGE APPAREL

US010834974B2

(12) **United States Patent**
Bigney et al.

(10) **Patent No.: US 10,834,974 B2**
(45) **Date of Patent: *Nov. 17, 2020**

(54) **GARMENTS FOR MEN**

(71) Applicant: **0912139 B.C. LTD.**, Kelowna (CA)

(72) Inventors: **Dustin Douglas Bigney**, West Vancouver (CA); **Shawn Robert Ellis**, Kelowna (CA)

(73) Assignee: **0912139 B.C. LTD.**, Kelowna (CA)

(*) Notice: Subject to any disclaimer, the term of this patent is extended or adjusted under 35 U.S.C. 154(b) by 291 days.

This patent is subject to a terminal disclaimer.

(21) Appl. No.: **16/030,769**

(22) Filed: **Jul. 9, 2018**

(65) **Prior Publication Data**

US 2018/0317563 A1 Nov. 8, 2018

Related U.S. Application Data

(63) Continuation of application No. 14/798,332, filed on Jul. 13, 2015, now Pat. No. 10,034,496, which is a continuation of application No. 13/193,584, filed on Jul. 28, 2011, now Pat. No. 9,687,030.

(60) Provisional application No. 61/429,065, filed on Dec. 31, 2010.

(51) **Int. Cl.**
A41B 9/02 (2006.01)

(52) **U.S. Cl.**
CPC ***A41B 9/02*** (2013.01); ***A41B 9/023*** (2013.01)

(58) **Field of Classification Search**
CPC A41B 9/02; A41B 9/023; A41B 9/026; A61F 5/40
USPC 2/400–405, 78.1
See application file for complete search history.

(56) **References Cited**

U.S. PATENT DOCUMENTS

2,033,551	A	3/1936	Rumery
2,140,459	A	12/1938	Reis
2,235,849	A	3/1941	Reis
2,254,863	A	9/1941	Weihe
2,310,839	A	2/1943	Chatfield et al.
2,328,953	A	9/1943	Chatfield et al.
2,438,310	A	3/1948	Ashe et al.
2,601,602	A	6/1952	Firsching
2,623,210	A	12/1952	Chatfield
2,624,336	A	1/1953	Hansley
2,641,257	A	6/1953	Rutledge
2,652,053	A	9/1953	Dann

(Continued)

FOREIGN PATENT DOCUMENTS

CA	133058	6/2010
CA	2729368	6/2012

(Continued)

OTHER PUBLICATIONS

U.S. Appl. No. 13/193,584, Ex Parte Quayle Action dated Mar. 3, 2015, 4 pages.

(Continued)

Primary Examiner — Katherine M Moran
(74) *Attorney, Agent, or Firm* — Kilpatrick Townsend & Stockton LLP

(57) **ABSTRACT**

Next-to-skin garments for men include an internal stretch panel. An opening in the stretch panel receives a wearer’s external genitalia. A three-dimensional pouch is defined between the stretch panel and a front portion of the body of the garment. Embodiments provide garments such as undershorts, boarding shorts, and athletic shorts.

17 Claims, 9 Drawing Sheets

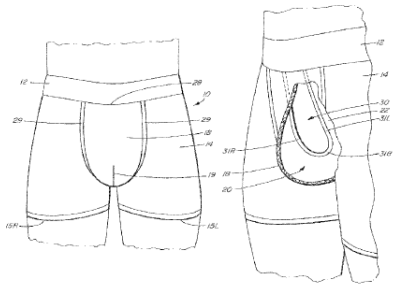

Source: POR at 2; EX 1001; https://www.bn3th.com/pages/innovation

KITSCH (SAXX)

In 2006, Trent Kitsch was on a fishing expedition and after spending hours in a cold, clammy ocean suit he knew there had to be a better way to protect his package from uncomfortable chafe.

As a former baseball player, he imagined a catcher's mitt hammock design turned upside down and built into his underwear.

After the fishing trip, and with the hammock idea still percolating, he worked with a seamstress and designer — and himself as the fit model — to create a paneled fabric hammock that separated his balls from his legs.

Fourteen prototypes later, the BallPark Pouch® and SAXX Underwear were ready to change men's lives.

Source: *see* POR at 9-11; https://www.saxxunderwear.com/pages/about-us; *see* Pet. Reply at 6 n.2; *see* PO Sur-Reply at 5 n.3

KITSCH (SAXX)

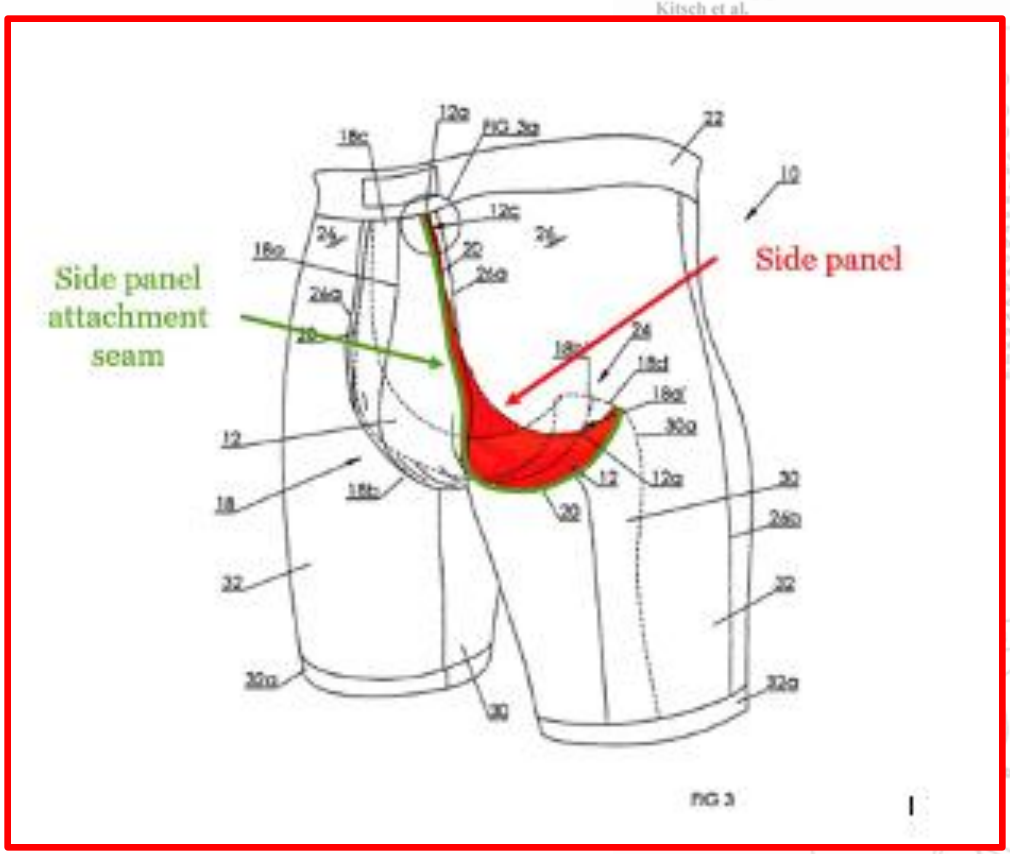

Source: POR at 10; EX 1007 at Fig. 3; https://www.saxxunderwear.com/pages/about-us; *see* Pet. Reply at 6 n.2; *see* PO Sur-Reply at 5 n.3

BROCKS

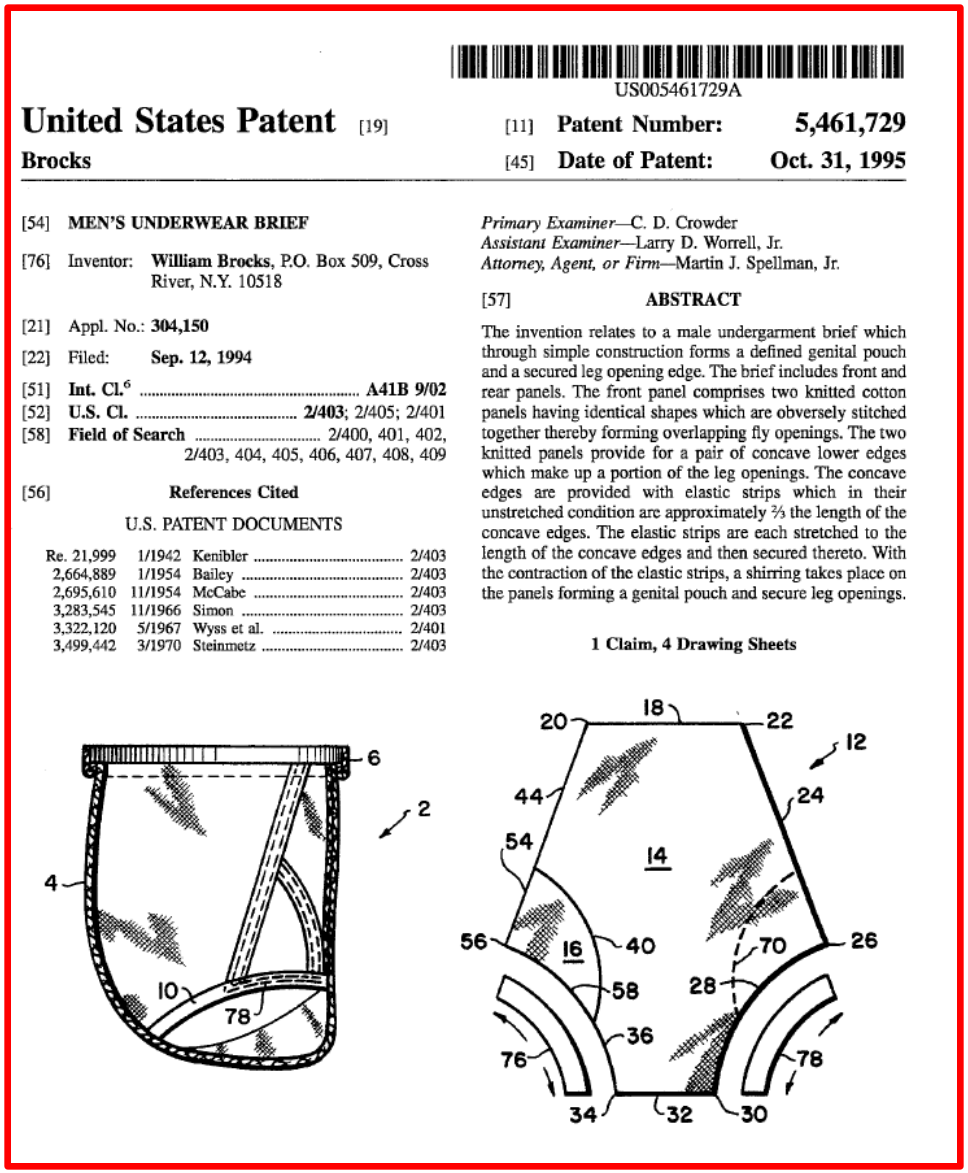

US005461729A

United States Patent [19]

Brocks

[11] **Patent Number: 5,461,729**

[45] **Date of Patent: Oct. 31, 1995**

[54] **MEN'S UNDERWEAR BRIEF**

[76] Inventor: **William Brocks**, P.O. Box 509, Cross River, N.Y. 10518

[21] Appl. No.: **304,150**

[22] Filed: **Sep. 12, 1994**

[51] **Int. Cl.**[6] **A41B 9/02**

[52] **U.S. Cl.** **2/403**; 2/405; 2/401

[58] **Field of Search** 2/400, 401, 402, 2/403, 404, 405, 406, 407, 408, 409

[56] **References Cited**

U.S. PATENT DOCUMENTS

Re. 21,999	1/1942	Kenibler	2/403
2,664,889	1/1954	Bailey	2/403
2,695,610	11/1954	McCabe	2/403
3,283,545	11/1966	Simon	2/403
3,322,120	5/1967	Wyss et al.	2/401
3,499,442	3/1970	Steinmetz	2/403

Primary Examiner—C. D. Crowder
Assistant Examiner—Larry D. Worrell, Jr.
Attorney, Agent, or Firm—Martin J. Spellman, Jr.

[57] **ABSTRACT**

The invention relates to a male undergarment brief which through simple construction forms a defined genital pouch and a secured leg opening edge. The brief includes front and rear panels. The front panel comprises two knitted cotton panels having identical shapes which are obversely stitched together thereby forming overlapping fly openings. The two knitted panels provide for a pair of concave lower edges which make up a portion of the leg openings. The concave edges are provided with elastic strips which in their unstretched condition are approximately ⅔ the length of the concave edges. The elastic strips are each stretched to the length of the concave edges and then secured thereto. With the contraction of the elastic strips, a shirring takes place on the panels forming a genital pouch and secure leg openings.

1 Claim, 4 Drawing Sheets

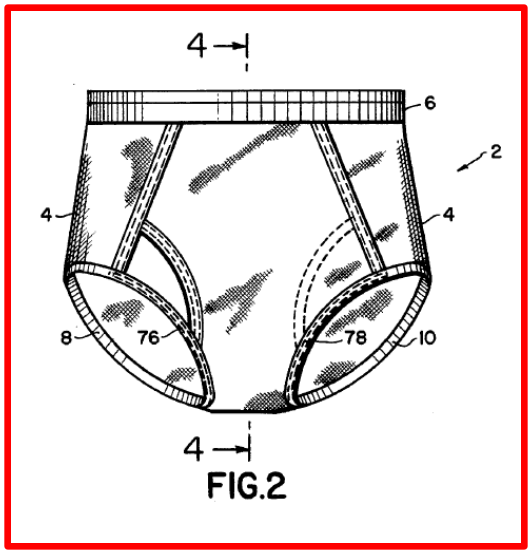

FIG.2

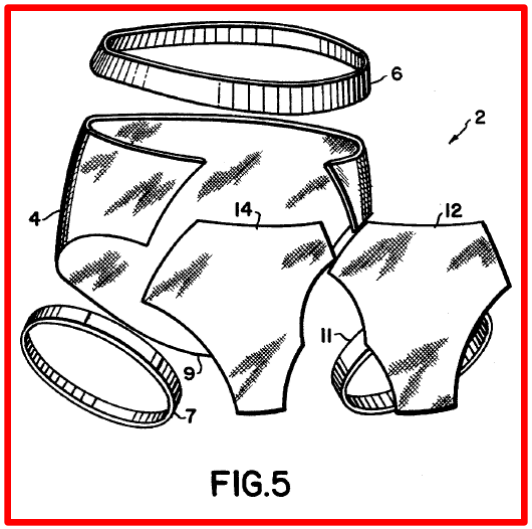

FIG.5

Source: POR at 11-13; EX 1008 (Fig. 5 is "a perspective exploded view of the various components of the brief of the invention.")

CARRILLO

(12) SOLICITUD INTERNACIONAL PUBLICADA EN VIRTUD DEL TRATADO DE COOPERACIÓN EN MATERIA DE PATENTES (PCT)

(19) Organización Mundial de la Propiedad Intelectual
Oficina internacional

(43) Fecha de publicación internacional
31 de Mayo de 2001 (31.05.2001)

PCT

(10) Número de Publicación Internacional
WO 01/37687 A1

(51) Clasificación Internacional de Patentes[7]: A41B 9/02

(21) Número de la solicitud internacional: PCT/ES00/00434

(22) Fecha de presentación internacional:
16 de Noviembre de 2000 (16.11.2000)

(25) Idioma de presentación: español

(26) Idioma de publicación: español

(30) Datos relativos a la prioridad:
U 9902953
23 de Noviembre de 1999 (23.11.1999) ES

(71) Solicitante e
(72) Inventor: GALIANA CARRILLO, Mauricio [ES/ES]; Calle Virgen Maria, 7-5°A-3, E-28007 Madrid (ES).

(74) Mandatario: TORO GORDILLO, Ignacio Maria; Calle Viriato, 56-1°-Izda., E-28010 Madrid (ES).

(81) Estados designados *(nacional)*: AE, AG, AL, AM, AT, AU, AZ, BA, BB, BG, BR, BY, BZ, CA, CH, CN, CR, CU, CZ, DE, DK, DM, DZ, EE, ES, FI, GB, GD, GE, GH, GM, HR, HU, ID, IL, IN, IS, JP, KE, KG, KP, KR, KZ, LC, LK, LR, LS, LT, LU, LV, MA, MD, MG, MK, MN, MW, MX, MZ, NO, NZ, PL, PT, RO, RU, SD, SE, SG, SI, SK, SL, TJ, TM, TR, TT, TZ, UA, UG, US, UZ, VN, YU, ZA, ZW.

(84) Estados designados *(regional)*: patente ARIPO (GH, GM, KE, LS, MW, MZ, SD, SL, SZ, TZ, UG, ZW), patente

[Continúa en la página siguiente]

(54) Title: HYGIENIC GARMENT FOR MEN'S UNDERWEAR

(54) Título: PRENDA HIGIENICA PARA ROPA INTERIOR DE HOMBRE

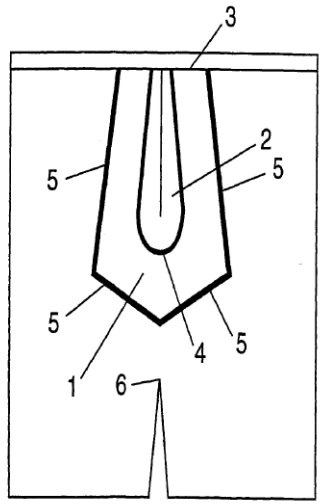

(57) Abstract: The invention relates to a hygienic elastic garment for men's underwear, which forms part and is sewn to classic underpants. It has a tear-shaped vertical opening extending from the elastic on the waistband of the underpants up to a given distance above the sewing in the top block depending on the model. By introducing the testicles through said opening, the base of said opening is located between the testicles and the groin. The testicles tend to be separated towards the front due to the fact that the garment is sewn to the inner front part of the underpants, thereby reducing contact and direct friction between the testicles and the groin. Said garment can provide relief for many individuals who suffer itching, eczema, rash. etc. caused by perspiration and friction.

(57) Resumen: Prenda higiénica para ropa interior de hombre, elástica, que forma parte del calzoncillo estándar mediante cosido. Dispone de una abertura vertical en forma de lágrima que va desde el elástico de la cinturilla del calzoncillo hasta una cierta distancia por encima de la costura del tiro, dependiendo del modelo. Introduciendo los testículos por dicha abertura, la base de la misma queda situada entre éstos y las ingles. Al estar cosida la prenda a la parte delantera interior del calzoncillo, la tendencia es a separar hacia delante los testículos, consiguiendo aminorar el continuo contacto y el rozamiento directo entre éstos y las ingles. Esta prenda puede procurar alivio para muchos de aquéllos que sufren picores, eccemas, erupciones, etc. provocados por la sudoración y el rozamiento.

WO 01/37687 A1

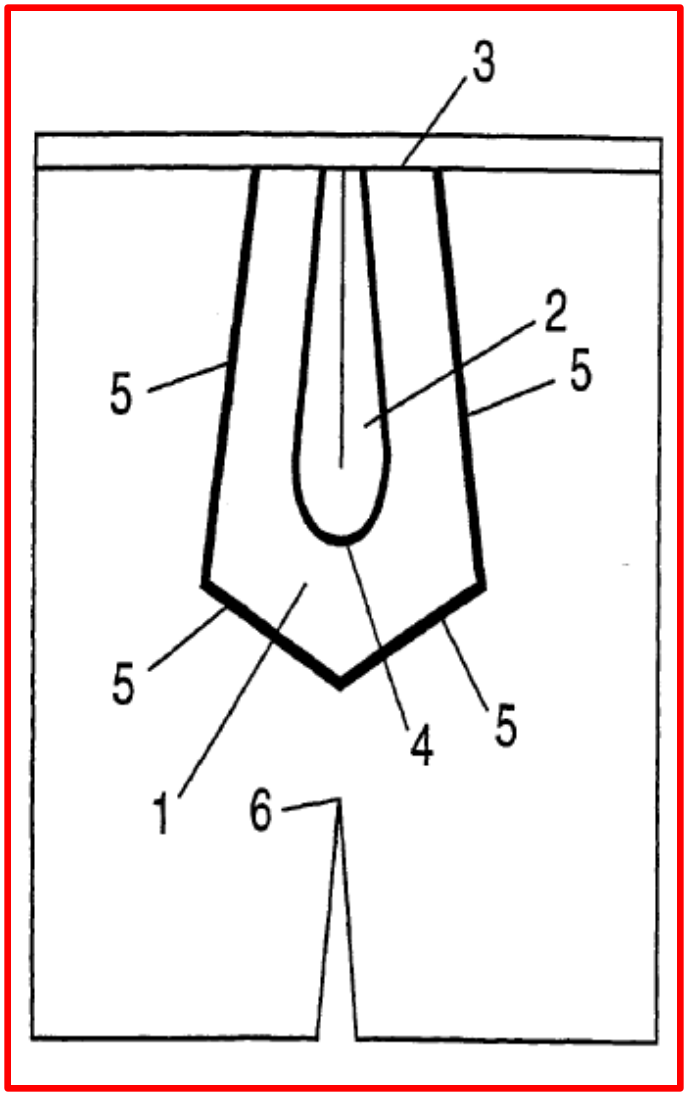

Source: POR at 13-14; EX 1009

THE ’974 PATENT

(12) **United States Patent**
Bigney et al.

(10) **Patent No.: US 10,834,974 B2**
(45) **Date of Patent: *Nov. 17, 2020**

(54) **GARMENTS FOR MEN**

(71) Applicant: **0912139 B.C. LTD.**, Kelowna (CA)

(72) Inventors: **Dustin Douglas Bigney**, West Vancouver (CA); **Shawn Robert Ellis**, Kelowna (CA)

(73) Assignee: **0912139 B.C. LTD.**, Kelowna (CA)

(*) Notice: Subject to any disclaimer, the term of this patent is extended or adjusted under 35 U.S.C. 154(b) by 291 days.

This patent is subject to a terminal disclaimer.

(21) Appl. No.: **16/030,769**

(22) Filed: **Jul. 9, 2018**

(65) **Prior Publication Data**

US 2018/0317563 A1 Nov. 8, 2018

Related U.S. Application Data

(63) Continuation of application No. 14/798,332, filed on Jul. 13, 2015, now Pat. No. 10,034,496, which is a continuation of application No. 13/193,584, filed on Jul. 28, 2011, now Pat. No. 9,687,030.

(60) Provisional application No. 61/429,065, filed on Dec. 31, 2010.

(51) **Int. Cl.**
A41B 9/02 (2006.01)

(52) **U.S. Cl.**
CPC ***A41B 9/02*** (2013.01); ***A41B 9/023*** (2013.01)

(58) **Field of Classification Search**
CPC A41B 9/02; A41B 9/023; A41B 9/026; A61F 5/40
USPC 2/400–405, 78.1
See application file for complete search history.

(56) **References Cited**

U.S. PATENT DOCUMENTS

2,033,551	A	3/1936	Rumery
2,140,459	A	12/1938	Reis
2,235,849	A	3/1941	Reis
2,254,863	A	9/1941	Weihe
2,310,839	A	2/1943	Chatfield et al.
2,328,953	A	9/1943	Chatfield et al.
2,438,310	A	3/1948	Ashe et al.
2,601,602	A	6/1952	Firsching
2,623,210	A	12/1952	Chatfield
2,624,336	A	1/1953	Hansley
2,641,257	A	6/1953	Rutledge
2,652,053	A	9/1953	Dann

(Continued)

FOREIGN PATENT DOCUMENTS

CA	133058	6/2010
CA	2729368	6/2012

(Continued)

OTHER PUBLICATIONS

U.S. Appl. No. 13/193,584, Ex Parte Quayle Action dated Mar. 3, 2015, 4 pages.

(Continued)

Primary Examiner — Katherine M Moran
(74) *Attorney, Agent, or Firm* — Kilpatrick Townsend & Stockton LLP

(57) **ABSTRACT**

Next-to-skin garments for men include an internal stretch panel. An opening in the stretch panel receives a wearer's external genitalia. A three-dimensional pouch is defined between the stretch panel and a front portion of the body of the garment. Embodiments provide garments such as undershorts, boarding shorts, and athletic shorts.

17 Claims, 9 Drawing Sheets

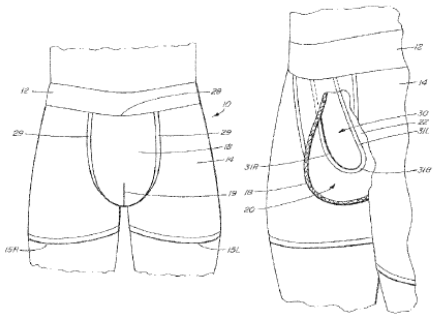

US 10,834,974 B2
Page 2

(56) **References Cited**

U.S. PATENT DOCUMENTS

2,872,685	A	2/1959	Denbo
3,207,155	A	9/1965	Casey
3,220,410	A	11/1965	Sloan
3,283,545	A	11/1966	Simon
3,294,086	A	12/1966	Netkin
3,459,181	A	8/1969	Mann
3,496,576	A	2/1970	Artzt
3,499,442	A	3/1970	Steinmetz
3,499,443	A	3/1970	Scheerer
3,511,234	A	5/1970	Larson
3,517,666	A	6/1970	Atlee
3,621,846	A	11/1971	Lehman
3,844,282	A	10/1974	King
4,009,495	A	3/1977	Faust
4,173,976	A	11/1979	Bloomquist et al.
4,195,630	A	4/1980	Connery et al.
4,377,008	A	3/1983	Jung
4,414,971	A	11/1983	Chung
4,554,685	A	11/1985	Ray
4,660,551	A	4/1987	Nishimura
4,702,239	A	10/1987	Ichikawa
4,759,355	A	7/1988	Thrower
4,870,958	A	10/1989	Webster
4,955,088	A	9/1990	Terjesen
5,029,345	A	7/1991	Angheluta et al.
5,070,869	A	12/1991	Zhang
5,157,793	A	10/1992	Michels
5,226,179	A	7/1993	Choi
5,237,706	A	8/1993	Nalbandian
5,283,912	A	2/1994	Chung
5,379,462	A	1/1995	Morgan et al.
5,461,729	A	10/1995	Brocks
2006/0162052	A1	7/2006	Stankowski et al.
2007/0180600	A1	8/2007	Allemann et al.
2007/0192941	A1	8/2007	Soderstrom
2007/0220660	A1	9/2007	Roesch et al.
2007/0245463	A1	10/2007	Kang
2007/0277285	A1	12/2007	Gravette et al.
2008/0178368	A1	7/2008	Clark
2008/0178369	A1	7/2008	Kitsch
2009/0106874	A1	4/2009	Shlush
2012/0167279	A1	7/2012	Bigney
2012/0167280	A1	7/2012	Adams et al.
2013/0219591	A1	8/2013	Gu
2015/0313290	A1	11/2015	Bigney et al.

FOREIGN PATENT DOCUMENTS

CA	2747893	1/2013
EP	0 476 818 A1	3/1992
WO	98/39981	9/1998
WO	01/37687 A1	5/2001

OTHER PUBLICATIONS

U.S. Appl. No. 13/193,584, Final Office Action dated Jan. 9. 2014, 19 pages.
U.S. Appl. No. 13/193,584, Non-Final Office Action dated Apr. 25, 2013, 18 pages.
U.S. Appl. No. 13/193,584, Notice of Allowance dated Aug. 6, 2014, 13 pages.
U.S. Appl. No. 13/193,584, Notice of Allowance dated Mar. 1, 2017, 8 pages.
U.S. Appl. No. 14/798,332, Non-Final Office Action dated Nov. 9, 2017, 5 pages.

Source: POR at 5; Ex 1001; PO Sur-reply at 4 n.2

THE ’974 PATENT CLAIM 1

(12) **United States Patent**
Bigney et al.

(10) **Patent No.: US 10,834,974 B2**
(45) **Date of Patent: *Nov. 17, 2020**

(54) **GARMENTS FOR MEN**

(71) Applicant: **0912139 B.C. LTD.**, Kelowna (CA)

(72) Inventors: **Dustin Douglas Bigney**, West Vancouver (CA); **Shawn Robert Ellis**, Kelowna (CA)

(73) Assignee: **0912139 B.C. LTD.**, Kelowna (CA)

(*) Notice: Subject to any disclaimer, the term of this patent is extended or adjusted under 35 U.S.C. 154(b) by 291 days.

This patent is subject to a terminal disclaimer.

(21) Appl. No.: **16/030,769**

(22) Filed: **Jul. 9, 2018**

(65) **Prior Publication Data**

US 2018/0317563 A1 Nov. 8, 2018

Related U.S. Application Data

(63) Continuation of application No. 14/798,332, filed on Jul. 13, 2015, now Pat. No. 10,034,496, which is a continuation of application No. 13/193,584, filed on Jul. 28, 2011, now Pat. No. 9,687,030.

(60) Provisional application No. 61/429,065, filed on Dec. 31, 2010.

(51) **Int. Cl.**
A41B 9/02 (2006.01)

(52) **U.S. Cl.**
CPC ***A41B 9/02*** (2013.01); ***A41B 9/023*** (2013.01)

(58) **Field of Classification Search**
CPC A41B 9/02; A41B 9/023; A41B 9/026; A61F 5/40
USPC 2/400–405, 78.1
See application file for complete search history.

(56) **References Cited**

U.S. PATENT DOCUMENTS

2,033,551	A	3/1936	Rumery
2,140,459	A	12/1938	Reis
2,235,849	A	3/1941	Reis
2,254,863	A	9/1941	Weihe
2,310,839	A	2/1943	Chatfield et al.
2,328,953	A	9/1943	Chatfield et al.
2,438,310	A	3/1948	Ashe et al.
2,601,602	A	6/1952	Firsching
2,623,210	A	12/1952	Chatfield
2,624,336	A	1/1953	Hansley
2,641,257	A	6/1953	Rutledge
2,652,053	A	9/1953	Dann

(Continued)

FOREIGN PATENT DOCUMENTS

CA	133058	6/2010
CA	2729368	6/2012

(Continued)

OTHER PUBLICATIONS

U.S. Appl. No. 13/193,584, Ex Parte Quayle Action dated Mar. 3, 2015, 4 pages.

(Continued)

Primary Examiner — Katherine M Moran
(74) *Attorney, Agent, or Firm* — Kilpatrick Townsend & Stockton LLP

(57) **ABSTRACT**

Next-to-skin garments for men include an internal stretch panel. An opening in the stretch panel receives a wearer’s external genitalia. A three-dimensional pouch is defined between the stretch panel and a front portion of the body of the garment. Embodiments provide garments such as undershorts, boarding shorts, and athletic shorts.

17 Claims, 9 Drawing Sheets

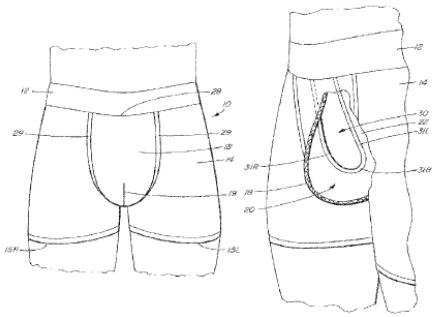

What is claimed is:

1. A male garment comprising:

a body including a front portion and having leg openings for a wearer’s legs;

a waistband attached by a waistband seam at an upper edge of the body;

a stretch panel attached to the body inside the front portion, the stretch panel comprising a sheet of elastically resilient four-way stretch material having a top edge attached to the body at a top location, a bottom edge attached to the body at a bottom location, side edges attached to the body at side seams extending substantially continuously along either side of the front portion and an opening for receiving a wearer’s genitals;

the stretch panel being resiliently elastic both in a direction between the top edge and the bottom edge and in a direction between the side edges, the stretch panel having a length when unstretched smaller than a length measured along the front portion between the top and bottom locations and a width when unstretched smaller than a width measured along the front portion between the side seams such that the front portion is gathered from side-to-side and top-to-bottom by the stretch panel and defines a three-dimensional pouch between the stretch panel and the front portion for receiving the wearer’s genitals and holding the wearer’s genitals while the garment is being worn.

Source: POR at 4-5; Ex 1001

FEATURES OF THE ’974 PATENT

- Pouch
- Stretch Panel
- Support Under Scrotum

Source: POR at 5-9

POUCH

U.S. Patent Nov. 17, 2020 Sheet 6 of 9 US 10,834,974 B2

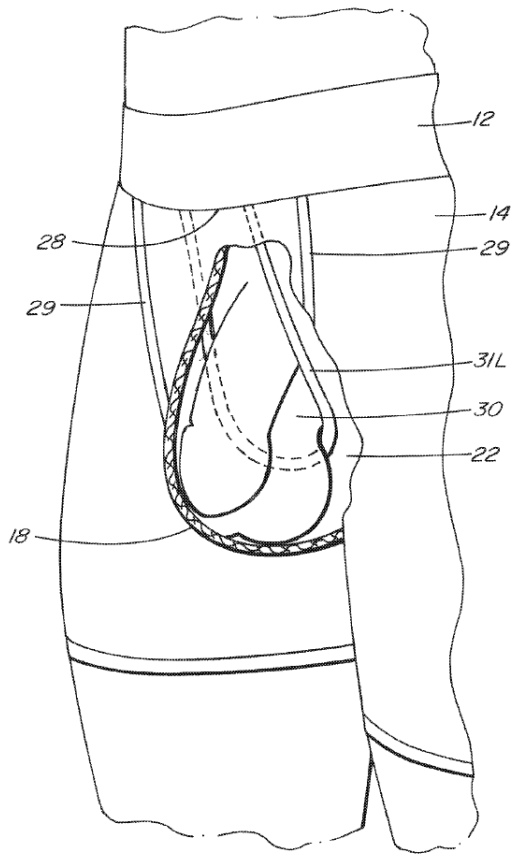

FIG. 6

As shown in FIG. **3**, undershorts **10** include a stretch panel **22** that extends between waistband **12** and the crotch area **24** of undershorts **10**. In the illustrated embodiment, undershorts **10** have a construction that includes a crotch panel **25** joined by seams **26** and **27** to the front and back sides of body **14** respectively. Crotch panel **25** is sometimes called an arc panel or moisture panel.

In this embodiment, a lower end of stretch panel **22** is attached at seam **26** and an upper end of stretch panel **22** is attached at the seam **28** joining waistband **12** to body **14**. Side edges of stretch panel **22** are joined to front portion **18** of body **14** along seams **29** on either side of front portion **18**.

When undershorts **10** are held open as shown for example in FIG. **3** with waistband **12** under gentle tension and body **14** hanging freely, stretch panel **22** is contracted and pulled away from front area **18** so as to provide a three-dimensional pouch **20** between stretch panel **22** and front portion **18**. The bias of stretch panel **22** to be contracted more than front portion **18** helps to cause opening **30** to be held open. Pouch **20** and opening **30** may be self-aligning with the penis and scrotum of a wearer as the wearer inserts his legs through leg openings **15**.

It can be appreciated that garments which incorporate a stretch panel as shown in the accompanying drawings may be formed such that they are self-aligning with a wearer's genitalia, allowing the garment to be put on by a wearer without the wearer having to manually hold or position the pouch to receive his genitals. A stretch panel structured and

Source: POR at 5-9, 28-30; EX 1001 at Fig. 6, 2:50 – 3:4, 7:18-23

STRETCH PANEL

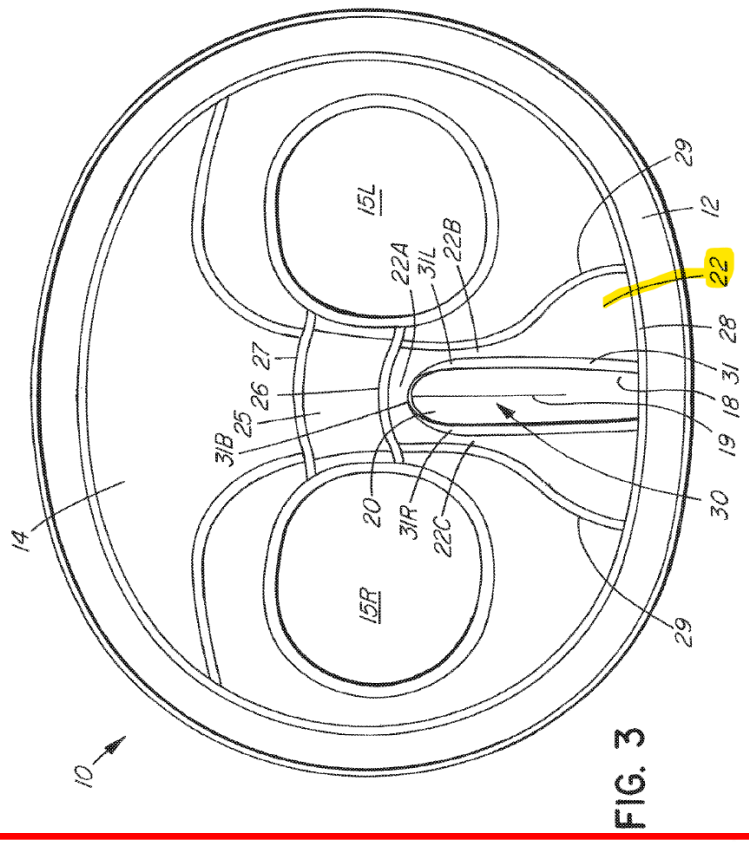

FIG. 3

As shown in FIG. **3**, undershorts **10** include a stretch panel **22** that extends between waistband **12** and the crotch area **24** of undershorts **10**. In the illustrated embodiment, undershorts **10** have a construction that includes a crotch panel **25** joined by seams **26** and **27** to the front and back sides of body **14** respectively. Crotch panel **25** is sometimes called an arc panel or moisture panel.

In this embodiment, a lower end of stretch panel **22** is attached at seam **26** and an upper end of stretch panel **22** is attached at the seam **28** joining waistband **12** to body **14**. Side edges of stretch panel **22** are joined to front portion **18** of body **14** along seams **29** on either side of front portion **18**.

When undershorts **10** are held open as shown for example in FIG. **3** with waistband **12** under gentle tension and body **14** hanging freely, stretch panel **22** is contracted and pulled away from front area **18** so as to provide a three-dimensional pouch **20** between stretch panel **22** and front portion **18**. The bias of stretch panel **22** to be contracted more than front portion **18** helps to cause opening **30** to be held open. Pouch **20** and opening **30** may be self-aligning with the penis and scrotum of a wearer as the wearer inserts his legs through leg openings **15**.

It can be appreciated that garments which incorporate a stretch panel as shown in the accompanying drawings may be formed such that they are self-aligning with a wearer's genitalia, allowing the garment to be put on by a wearer without the wearer having to manually hold or position the pouch to receive his genitals. A stretch panel structured and

Source: POR 5-9, 28-30; EX 1001 at Fig. 3, 2:50 – 3:4, 7:18-23

SUPPORT UNDER SCROTUM

(12) United States Patent (10) Patent No.: US 10,834,974 B2

has an oval or elliptical shape (not shown). Regardless of the particular shape of opening **30** stretch panel **22** is configured to define opening **30** and to provide support around and underneath the scrotum of the wearer in order to comfortably position the wearer's genitals forward into pouch **20**.

This patent is subject to a terminal disclaimer. (Continued)

In use the wearer's scrotum may be supported underneath by the bottom portion of the stretch panel with the wearer's penis and scrotum contained in the pouch.

(Continued)

the underside of the wearer's genitalia from chafing. The edge **31**B along the bottom of opening **30** is gently urged upward by the elastic nature of stretch panel **22** to gently support the wearer's genitalia from below. Side portions **22**B

See application file for complete search history. 17 Claims, 9 Drawing Sheets

pouch to receive his genitals. A stretch panel structured and incorporated as illustrated in the accompanying drawings can support and position a wearer's the scrotum and penis away from both the wearer's thighs and perineum. The scrotum and penis may therefore be protected from pinching between 5 the thighs or being sat upon, thereby enhancing comfort of the wearer.

Source: POR at 5-8 ("*see also* FIG. 3"), 9, 28 ("FIG. 3 and FIG. 6"), 29-30; EX 1001 at 3:14-19, 3:47-49, 4:31-35, 7:23-29; EX2013 ¶¶29-35, 50-54

Kitsch in View of Brocks Does Not Render Claim 1 of the ’974 Patent Obvious

Kitsch Does Not Disclose Multiple Elements of Claim 1 of the ’974 Patent

KITSCH DOES NOT DISCLOSE MULTIPLE ELEMENTS OF THE ’974 PATENT

1[c] a stretch panel attached to the body inside the front portion,

1[d] the stretch panel comprising a sheet of elastically resilient four-way stretch material having

1[e][i] a top edge attached to the body at a top location, **1[e][ii]** a bottom edge attached to the body at a bottom location, **1[e][iii]** side edges attached to the body at side seams extending substantially continuously along either side of the front portion and **1[e][iv]** an opening for receiving a wearer's genitals;

1[f] the stretch panel being resiliently elastic both in a direction between the top edge and the bottom edge and in a direction between the side edges, the stretch panel having

1[g] [i] a length when unstretched smaller than a length measured along the front portion between the top and bottom locations and **1[g][ii]** a width when unstretched smaller than a width measured along the front portion between the side seams such that **1[g][iii]** the front portion is gathered from side-to-side and top-to-bottom by the stretch panel and defines a three-dimensional pouch between the stretch panel and the front portion for receiving the wearer's genitals and holding the wearer's genitals while the garment is being worn.

Source: POR at 28-42

KITSCH DOES NOT DISCLOSE 1[c]

What is claimed is:

1. A male garment comprising:

a body including a front portion and having leg openings for a wearer's legs;

a waistband attached by a waistband seam at an upper edge of the body;

a stretch panel attached to the body inside the front portion, the stretch panel comprising a sheet of elastically resilient four-way stretch material having a top edge attached to the body at a top location, a bottom edge attached to the body at a bottom location, side edges attached to the body at side seams extending substantially continuously along either side of the front portion and an opening for receiving a wearer's genitals;

the stretch panel being resiliently elastic both in a direction between the top edge and the bottom edge and in a direction between the side edges, the stretch panel having a length when unstretched smaller than a length measured along the front portion between the top and bottom locations and a width when unstretched smaller than a width measured along the front portion between the side seams such that the front portion is gathered from side-to-side and top-to-bottom by the stretch panel and defines a three-dimensional pouch between the stretch panel and the front portion for receiving the wearer's genitals and holding the wearer's genitals while the garment is being worn.

1[c] a stretch panel attached to the body inside the front portion,

Source: POR at 4-5; Ex 1001

’974 Patent Specification On 1[c]

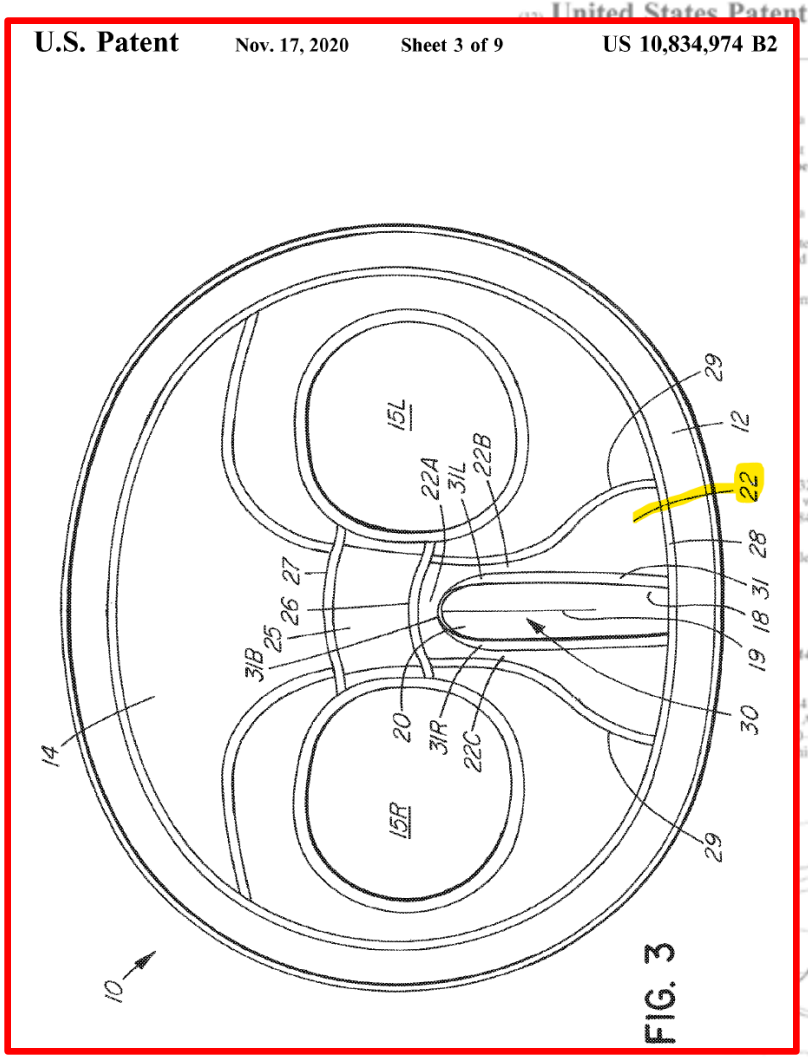

FIG. 3

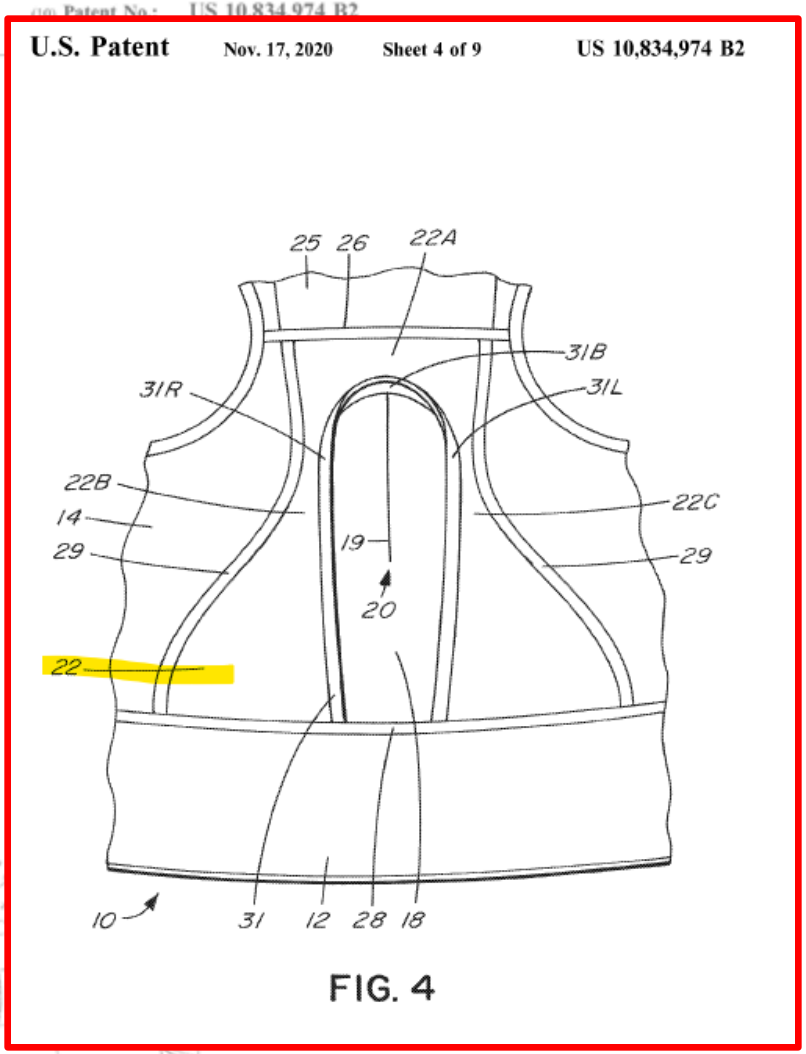

FIG. 4

Source: EX 1001 at Figs. 3-4

’974 Patent Specification On 1[c]

SUMMARY OF THE INVENTION

Aspects of the invention provide a range of garments for men and boys. The garments provide a stretch panel having an opening for receiving a wearer’s genitals. A pouch is defined between the stretch panel and a front of the garment.

As shown in FIG. **3**, undershorts **10** include a stretch panel **22** that extends between waistband **12** and the crotch area **24** of undershorts **10**. In the illustrated embodiment, undershorts **10** have a construction that includes a crotch panel **25** joined by seams **26** and **27** to the front and back sides of body **14** respectively. Crotch panel **25** is sometimes called an arc panel or moisture panel.

When undershorts **10** are held open as shown for example in FIG. **3** with waistband **12** under gentle tension and body **14** hanging freely, stretch panel **22** is contracted and pulled away from front area **18** so as to provide a three-dimensional pouch **20** between stretch panel **22** and front portion **18**. The

has an oval or elliptical shape (not shown). Regardless of the particular shape of opening **30** stretch panel **22** is configured to define opening **30** and to provide support around and underneath the scrotum of the wearer in order to comfortably position the wearer’s genitals forward into pouch **20**.

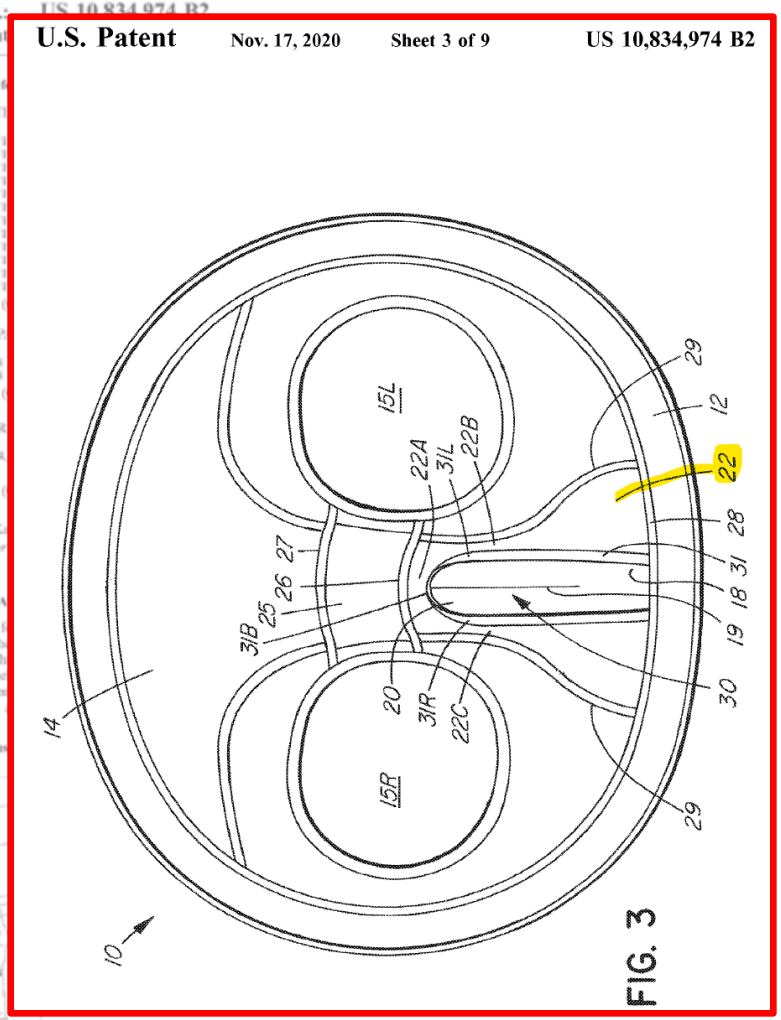

Source: POR at 28-33; EX 1001 at 1:36-41, 2:50-56, 2:62-66, 3:14-19

’974 Patent Specification On 1[c]

positioned forward into pouch **20** as a result of this bias. As undershorts **10** are pulled on, stretch panel stretches. This

In use the wearer’s scrotum may be supported underneath by the bottom portion of the stretch panel with the wearer’s penis and scrotum contained in the pouch.

Stretch panel **22** may be made of a two-way stretch material such that when undershorts **10** are being worn, stretch panel **22** is under gentle tension. This causes stretch panel **22** to be held gently without sagging against the wearer’s body in the perineal area and in the area adjacent the wearer’s inner upper thighs. Stretch panel **22** is preferably made of or faced with a soft fabric that is comfortable against a wearer’s skin. Stretch panel **22** is preferably made of a breathable fabric.

In the illustrated embodiment, stretch panel **22** is generally rectangular. The length of attachment of stretch panel **22**

After assembly, stretch panel **22** can contract. This gathers the material of front portion **18** and helps to form pouch **20** to have a three-dimensional volume open to receive a wearer’s genitalia even when undershorts **10** are being suspended from waist hand **12** in preparation for being put on.

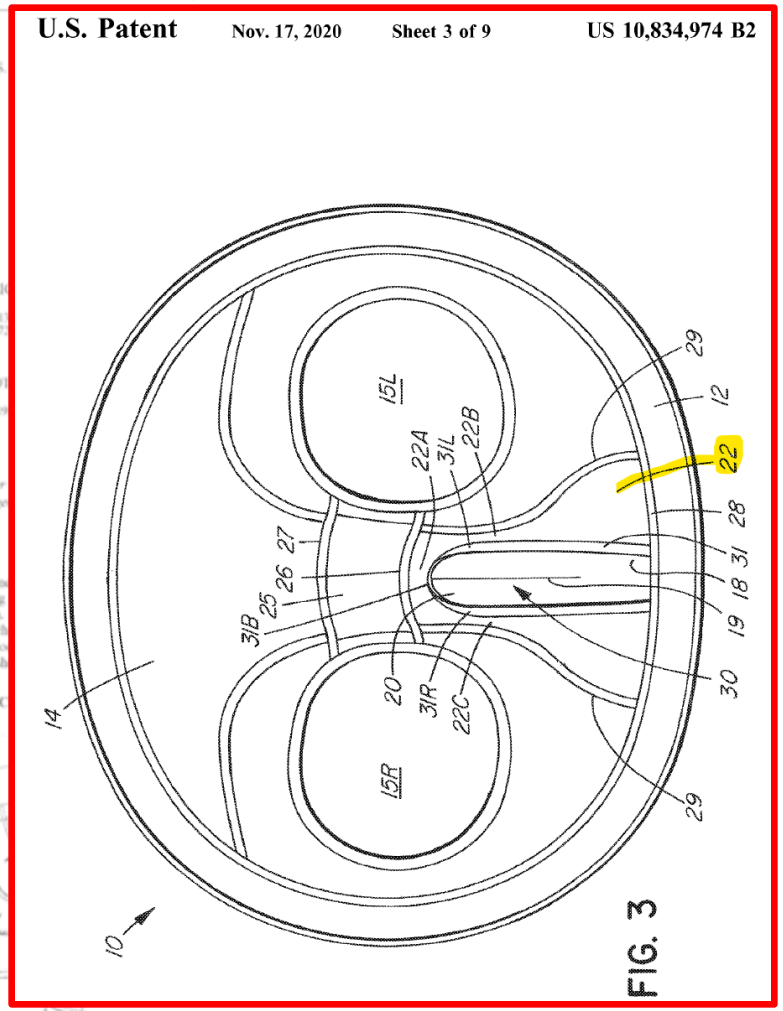

Source: POR at 28 (“FIG. 3 and FIG. 6”), 29-33; EX 1001 at 3:33-34, 3:47-49, 3:62 – 4:3, 4:37-38, 6:16-21; EX2013 ¶¶29-35, 50-54, 81-83; PET at 29-30

LEGAL STANDARDS

- "[a] patent may not be obtained . . . if the differences between the subject matter sought to be patented and the prior art are such that the subject matter as a whole would have been obvious at the time the invention was made to a person having ordinary skill in the art to which said subject matter pertains."

  35 U.S.C. § 103(a)

- If a single element of the claim is absent from the prior art, the claim is not obvious.

  CFMT, Inc. v. Yieldup Int'l Corp., 349 F.3d 1333, 1342 (Fed. Cir. 2003)

- Obviousness is a legal determination that is based on underlying factual considerations, including: (1) the level of ordinary skill in the art, (2) the scope and content of the prior art, (3) any differences between the claimed subject matter and the prior art, and (4) secondary considerations of non-obviousness.

  Graham v. John Deere Co. of Kansas City, 383 U.S. 1, 17–18 (1966)

Source: POR at 15-21

LEGAL STANDARDS, cont'd

- Reliance on hindsight bias is impermissible to support an obviousness finding, as it may not be "the thread that stitches together prior art patches into something that is the claimed invention."

Metalcraft of Mayville, Inc. v. Toro Co., 848 F.3d 1358, 1367 (Fed. Cir. 2017)

- Where the necessary reasoning to modify an existing reference is conclusory or absent, "it is especially important to guard against the dangers of hindsight bias" and not simply "assume that 'an ordinary artisan would be awakened to modify prior art in such a way as to lead to an obviousness rejection.'"

Plantronics, Inc. v. Aliph, Inc., 724 F.3d 1343, 1354 (Fed. Cir. 2013)

Source: POR at 15-21

LEGAL STANDARDS, cont'd

- The conclusion of obviousness based on a combination of references must also be supported with explicit analysis of a reason to combine those references.

KSR Int'l Co. v Teleflex Inc., 550 U.S. 398 at 418 (2007)

- The Federal Circuit has stated that such reasons must be more than "mere conclusory statements; instead, there must be some articulated reasoning with some rational underpinning to support the legal conclusion of obviousness."

In re Kahn, 441 F.3d 977, 988 (Fed. Cir. 2006)

- Additionally, reliance on "common sense" as a basis for adjusting existing technology without any substantiated evidence adds nothing to the obviousness inquiry.

Mintz v. Dietz & Watson, Inc., 679 F.3d 1372, 1377 (Fed. Cir. 2012)

Source: POR at 15-21

KITSCH DOES NOT DISCLOSE 1[c] NO STRETCH PANEL

- Kitsch discloses "side panels" that act as parallel fences; they do not meet

[0027] As seen in the interior of briefs **10**, side panels **12** are formed of two separate and substantially parallel pieces of mesh fabric attached to the laterally spaced apart pouch seams **20**.

[0028] The side panels **12** form a pair of generally parallel fences which extend upwardly from, and along, seams **20** so as to extend their uppermost edges **12***a* upwardly substantially completely into the crack or fold between the laterally outer sides of scrotum **14** and the top of the inner thighs, that is, along the fold of skin where the top of the inner thighs join the top of the scrotum along a lower-most aspect of the abdomen of user **8**. This joint, where the inner thighs and scrotum

Source: POR at 28-33; EX. 1007 at [0027-0028)

KITSCH DOES NOT DISCLOSE 1[c]
NO STRETCH PANEL

- Kitsch prevents the scrotum from touching the inner thigh

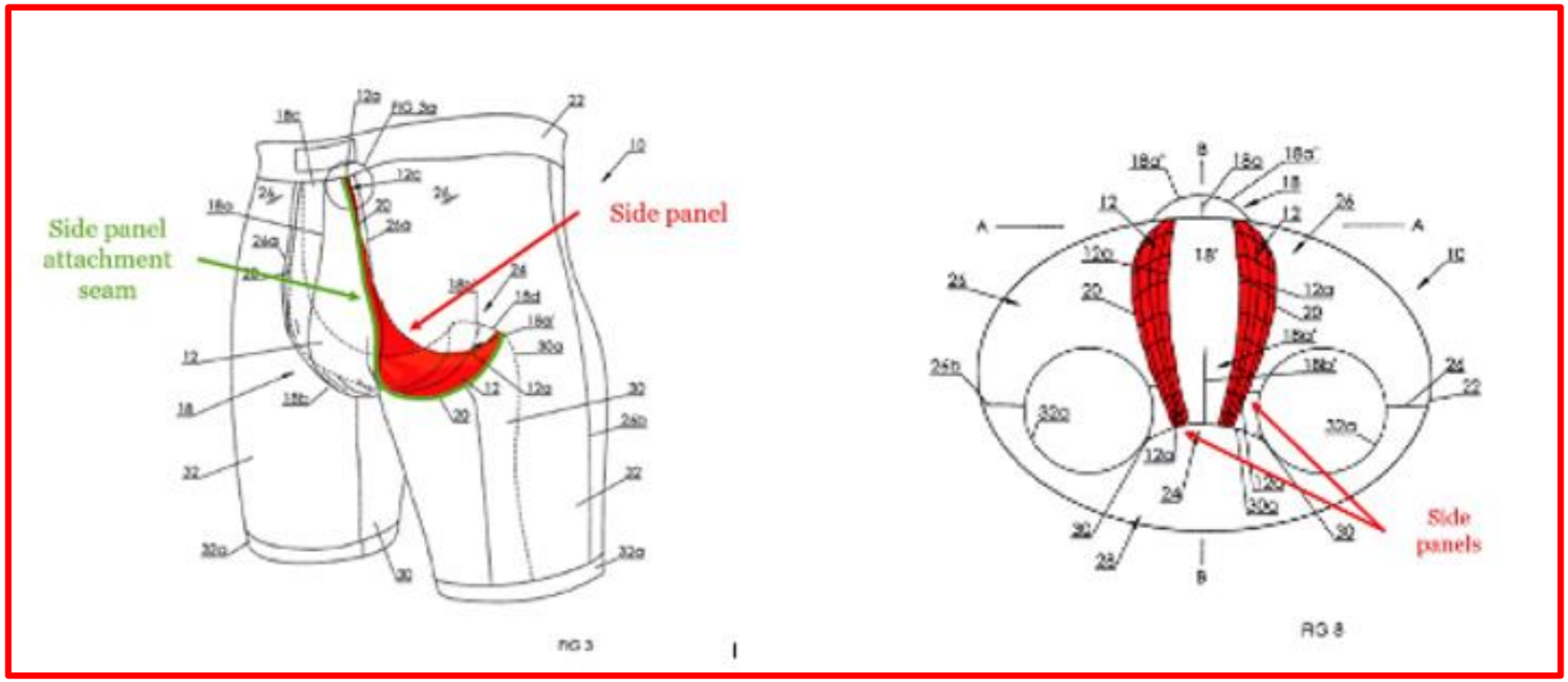

Source: POR at 10, 28-33; EX 1007 at Figs. 3, 8

KITSCH DOES NOT DISCLOSE 1[c]
NO STRETCH PANEL

- Kitsch's side panels do not perform like the '974 Patent's Stretch Panel

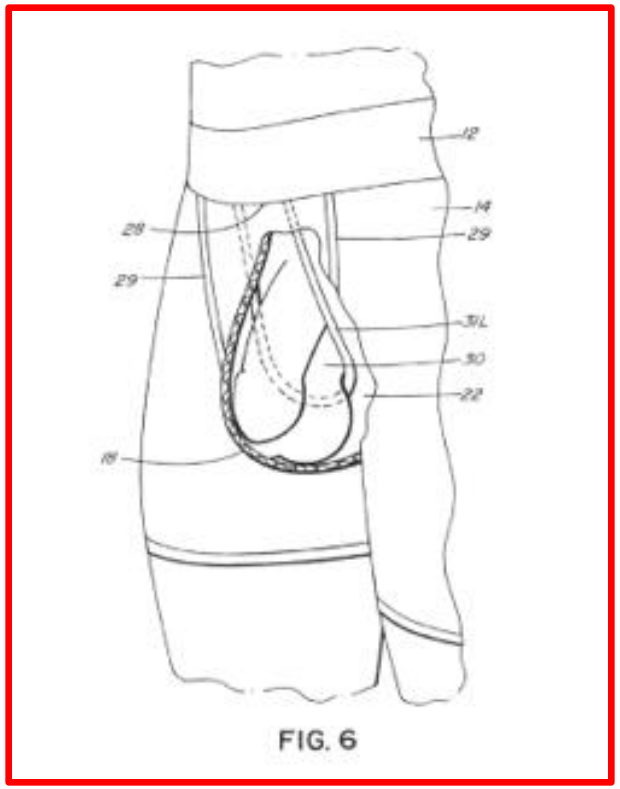

FIG. 6

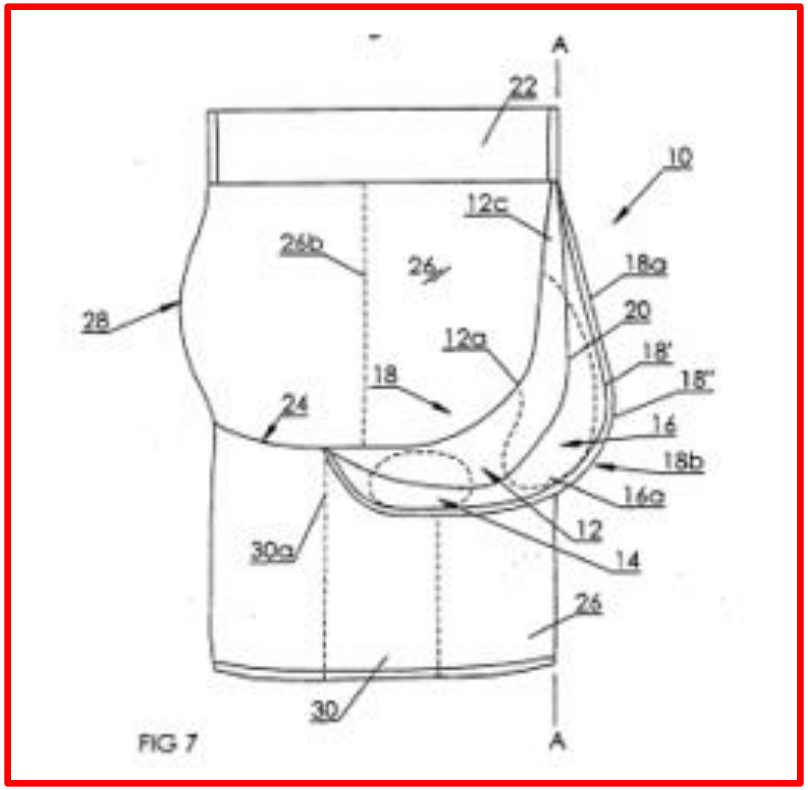

FIG 7

Source: POR at 28-33; EX 1001 at Fig. 6; EX 1007 at Fig. 7

KITSCH DOES NOT DISCLOSE 1[d]

What is claimed is:

1. A male garment comprising:

a body including a front portion and having leg openings for a wearer's legs;

a waistband attached by a waistband seam at an upper edge of the body;

a stretch panel attached to the body inside the front portion, the stretch panel comprising a sheet of elasti-

edge attached to the body at a top location and a bottom edge attached to the body at a bottom location, side

portion and an opening for receiving a wearer's geni-

a stretch panel having resilient elastic both in a direction between the top edge and the bottom edge and in a direction between the side edges, the stretch panel having a length when unstretched smaller than a length measured along the front portion between the top and bottom locations and a width when unstretched smaller than a width measured along the front portion between the side seams such that the front portion is gathered from side-to-side and top-to-bottom by the stretch panel and defines a three-dimensional pouch between the stretch panel and the front portion for receiving the wearer's genitals and holding the wearer's genitals while the garment is being worn.

1[d] the stretch panel comprising a sheet of elastically resilient four-way stretch material having

Source: POR at 4; Ex 1001

KITSCH DOES NOT DISCLOSE 1[d]

- Kitsch calls for a mesh knit 4x4 box weave fabric, while the ’974 Patent uses a tricot construction 4-way stretch knit fabric

- Kitsch focuses on breathability, while the ’974 Patent focuses on elasticity and comfort

Source: POR at 27-28; EX 2013 at ¶57

KITSCH DOES NOT DISCLOSE 1[e]

1[e][i] a top edge attached to the body at a top location, **1[e][ii]** a bottom edge attached to the body at a bottom location, **1[e][iii]** side edges attached to the body at side seams extending substantially continuously along either side of the front portion and **1[e][iv]** an opening for receiving a wearer's genitals;

Source: POR at 4; Ex 1001

’974 Patent Specification On 1[e]

(12) United States Patent
Bigney et al.

(10) Patent No.: US 10,834,974 B2
(45) Date of Patent: *Nov. 17, 2020

In this embodiment, a lower end of stretch panel **22** is attached at seam **26** and an upper end of stretch panel **22** is attached at the seam **28** joining waistband **12** to body **14**. Side edges of stretch panel **22** are joined to front portion **18** of body **14** along seams **29** on either side of front portion **18**.

As can be seen in FIG. **3**, holding the waistband of undershorts open as one would do to put undershorts **10** on naturally causes pouch **20** to be open to receive a wearer's genitals which can drop into place in pouch **20** through opening **30** as undershorts **10** are put on. In other words, when undershorts **10** is held by a man so as to be in a ready-to-wear position (i.e. held in mid-air by the waistband), the weight of undershorts **10** holds stretch panel **22** so that opening **30** is open and clearly defined. The man's genitals are thus naturally guided through opening **30** and positioned forward into pouch **20** as a result of this bias. As

U.S. Patent Nov. 17, 2020 Sheet 3 of 9 US 10,834,974 B2

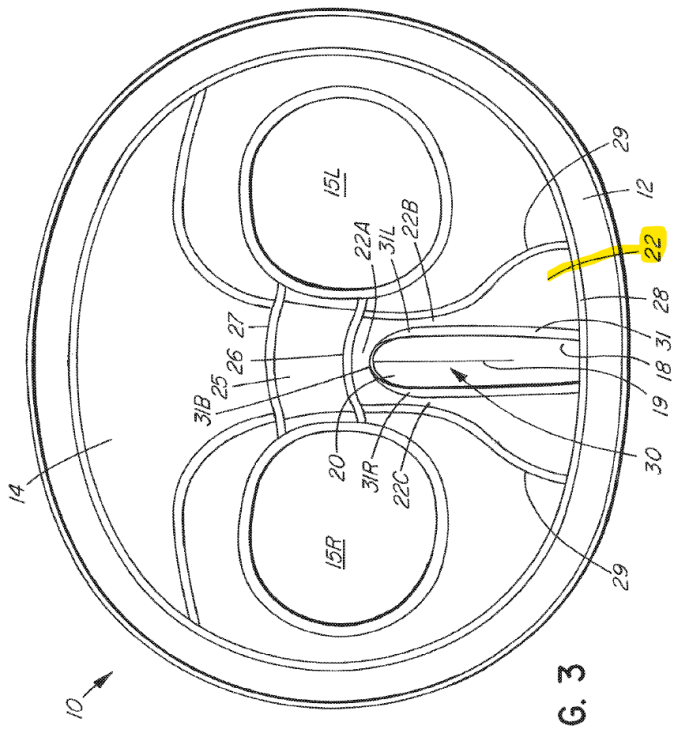

FIG. 3

Source: POR at 28 (“FIG. 3 and FIG. 6”), 29-33; EX 1001 at 2:57-61, 3:21-33, Fig. 3; EX2013 ¶¶29-35, 50-54, 81-83

KITSCH DOES NOT DISCLOSE 1[e]
NO OPENING

- Kitsch never uses the terms "top edge" or "bottom edge"

- Kitsch uses parallel fences

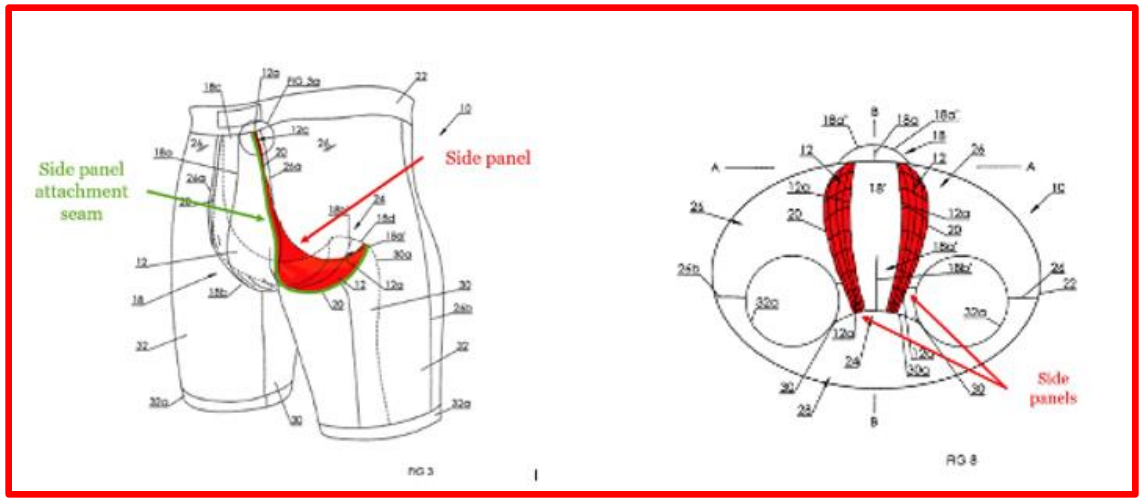

Source: POR at 34-39; EX 1007 at Figs. 3, 8

KITSCH DOES NOT DISCLOSE 1[e]
NO OPENING

- Robin Wagner, expert for Petitioner, did not know if Kitsch disclosed an opening

11 Q. Does Kitsch use the word opening anywhere to
12 describe the space between the two side panels?
13 A. As I said before, without reading the entire
14 patent or doing a search I don't have access to, I don't
15 know.

5 Q. Haven't you read the entire patent?
6 A. A few times. Yes.
7 Q. A few times. Okay. And as you sit here today
8 you don't know if you used the word opening to describe
9 that area between the side panels?
10 A. We're talking about several patents with
11 thousands and thousands of words. So, that's my answer
12 without reading the entire patent again to find one
13 word. I don't know.

Source: POR at 23; EX. 2012 at 79:2 – 84:13

KITSCH DOES NOT DISCLOSE 1[e]
NO OPENING

- Bernie Kahn, expert for Patent Owner, is unrebutted:

> 61. The Kitsch side panels are not seamed or stitched together—they are parallel, and they never meet, so they do not include any opening. Kitsch is clear on that. But Petitioner states, "Kitsch's side panels include an 'opening' for receiving the wearer's genitals in 'an anatomical pouch compartment[.]' (Kitsch, [0006].)" Pet. at 19. This is not accurate.
>
> 62. The word "opening" is nowhere found in the description of Kitsch's invention. Kitsch did describe the prior art reference Angheluta as having an opening, but nowhere else is "opening" used. Kitsch's side panels do not include an opening.

Source: POR at 34-39; EX. 2013, at ¶¶61-62

KITSCH DOES NOT DISCLOSE 1[f]

What is claimed is:

1. A male garment comprising:

a body including a front portion and having leg openings for a wearer's legs;

a waistband attached by a waistband seam at an upper edge of the body;

a stretch panel attached to the body inside the front portion, the stretch panel comprising a sheet of elastically resilient four-way stretch material having a top edge attached to the body at a top location, a bottom edge attached to the body at a bottom location, side edges attached to the body at side seams extending substantially continuously along either side of the front portion and an opening for receiving a wearer's genitals;

the stretch panel being resiliently elastic both in a direction between the top edge and the bottom edge and in a direction between the side edges, the stretch panel having a length when unstretched smaller than a length measured along the front portion between the top and bottom locations and a width when unstretched smaller than a width measured along the front portion between the side seams such that the front portion is gathered from side-to-side and top-to-bottom by the stretch panel and defines a three-dimensional pouch between the stretch panel and the front portion for receiving the wearer's genitals and holding the wearer's genitals while the garment is being worn.

1[f] the stretch panel being resiliently elastic both in a direction between the top edge and the bottom edge and in a direction between the side edges, the stretch panel having

Source: POR at 4; Ex 1001

KITSCH DOES NOT DISCLOSE 1[f]

- Petitioner does not show how Kitsch's side panels are directionally resilient between a top edge and bottom edge and between side panels

- Petitioner does not say Brocks discloses 1[f], so cannot raise it now

Source: POR at 40-41; EX. 2013, at ¶69

KITSCH DOES NOT DISCLOSE 1[g]

1[g] [i] a length when unstretched smaller than a length measured along the front portion between the top and bottom locations and **1[g][ii]** a width when unstretched smaller than a width measured along the front portion between the side seams such that **1[g][iii]** the front portion is gathered from side-to-side and top-to-bottom by the stretch panel and defines a three-dimensional pouch between the stretch panel and the front portion for receiving the wearer's genitals and holding the wearer's genitals while the garment is being worn.

Source: POR at 4-5; Ex 1001

’974 Patent Specification On 1[g]

SUMMARY OF THE INVENTION

Aspects of the invention provide a range of garments for men and boys. The garments provide a stretch panel having an opening for receiving a wearer’s genitals. A pouch is defined between the stretch panel and a front of the garment.

This invention relates to garments for men that include pouches to receive the wearer’s genitalia. Such garments may provide enhanced comfort for the wearer.

When undershorts **10** are held open as shown for example in FIG. **3** with waistband **12** under gentle tension and body **14** hanging freely, stretch panel **22** is contracted and pulled away from front area **18** so as to provide a three-dimensional pouch **20** between stretch panel **22** and front portion **18**. The

has an oval or elliptical shape (not shown). Regardless of the particular shape of opening **30** stretch panel **22** is configured to define opening **30** and to provide support around and underneath the scrotum of the wearer in order to comfortably position the wearer’s genitals forward into pouch **20**.

U.S. Patent Nov. 17, 2020 Sheet 5 of 9 US 10,834,974 B2

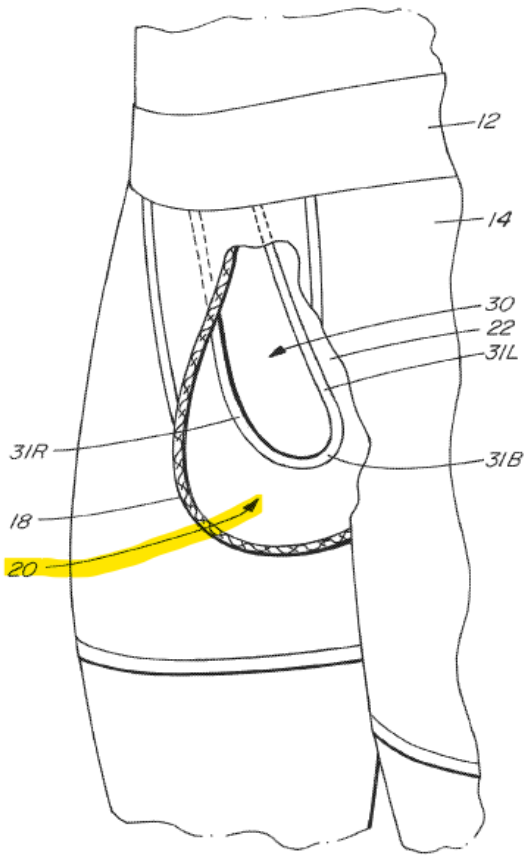

FIG. 5

Source: POR 5-9, 49-51; EX 1001 at 1:36-41, 2:30-32, 2:62-66, 3:14-19, Fig. 5; EX2013 ¶¶29-35, 50-54

’974 Patent Specification On 1[g]

As can be seen in FIG. **3**, holding the waistband of undershorts open as one would do to put undershorts **10** on naturally causes pouch **20** to be open to receive a wearer’s genitals which can drop into place in pouch **20** through opening **30** as undershorts **10** are put on. In other words, when undershorts **10** is held by a man so as to be in a ready-to-wear position (i.e. held in mid-air by the waist-band), the weight of undershorts **10** holds stretch panel **22** so that opening **30** is open and clearly defined. The man’s genitals are thus naturally guided through opening **30** and positioned forward into pouch **20** as a result of this bias. As

In use the wearer’s scrotum may be supported underneath by the bottom portion of the stretch panel with the wearer’s penis and scrotum contained in the pouch.

After assembly, stretch panel **22** can contract. This gathers the material of front portion **18** and helps to form pouch **20** to have a three-dimensional volume open to receive a wearer’s genitalia even when undershorts **10** are being suspended from waist hand **12** in preparation for being put on.

Source: POR at 5-8 (“*see also* FIG. 3”), 9, 28 (“FIG. 3 and FIG. 6”), 29-30; EX 1001 at 3:21-33, 3:47-49, 6:16-21; EX2013 ¶¶29-35, 50-54

KITSCH DOES NOT DISCLOSE 1[g]
NO GATHERED POUCH

- Kitsch discloses "side panels" that act as parallel fences
- Kitsch does not disclose gathering or stretching
- Kitsch's side panels are orthogonal to its pouch, which does not allow for gathering

Source: POR at 41-42; EX. 2013, at ¶71

Petitioner does not Allege that Brocks Discloses Elements 1[c-g] of Claim 1 of the ’974 Patent

PETITIONER DOES NOT ALLEGE THAT BROCKS DISCLOSES ELEMENTS 1[c-g] OF THE '974 PATENT

1[c] a stretch panel attached to the body inside the front portion,

1[d] the stretch panel comprising a sheet of elastically resilient four-way stretch material having

1[e][i] a top edge attached to the body at a top location, **1[e][ii]** a bottom edge attached to the body at a bottom location, **1[e][iii]** side edges attached to the body at side seams extending substantially continuously along either side of the front portion and **1[e][iv]** an opening for receiving a wearer's genitals;

1[f] the stretch panel being resiliently elastic both in a direction between the top edge and the bottom edge and in a direction between the side edges, the stretch panel having

1[g] [i] a length when unstretched smaller than a length measured along the front portion between the top and bottom locations and **1[g][ii]** a width when unstretched smaller than a width measured along the front portion between the side seams such that **1[g][iii]** the front portion is gathered from side-to-side and top-to-bottom by the stretch panel and defines a three-dimensional pouch between the stretch panel and the front portion for receiving the wearer's genitals and holding the wearer's genitals while the garment is being worn.

Source: POR at 28-46; *compare*, *e.g.*, Pet. at 12 ("Kitsch discloses Claim 1[c]") *with* Pet. at 4-94 (nowhere stating that Brocks discloses 1[c-g])

BROCKS

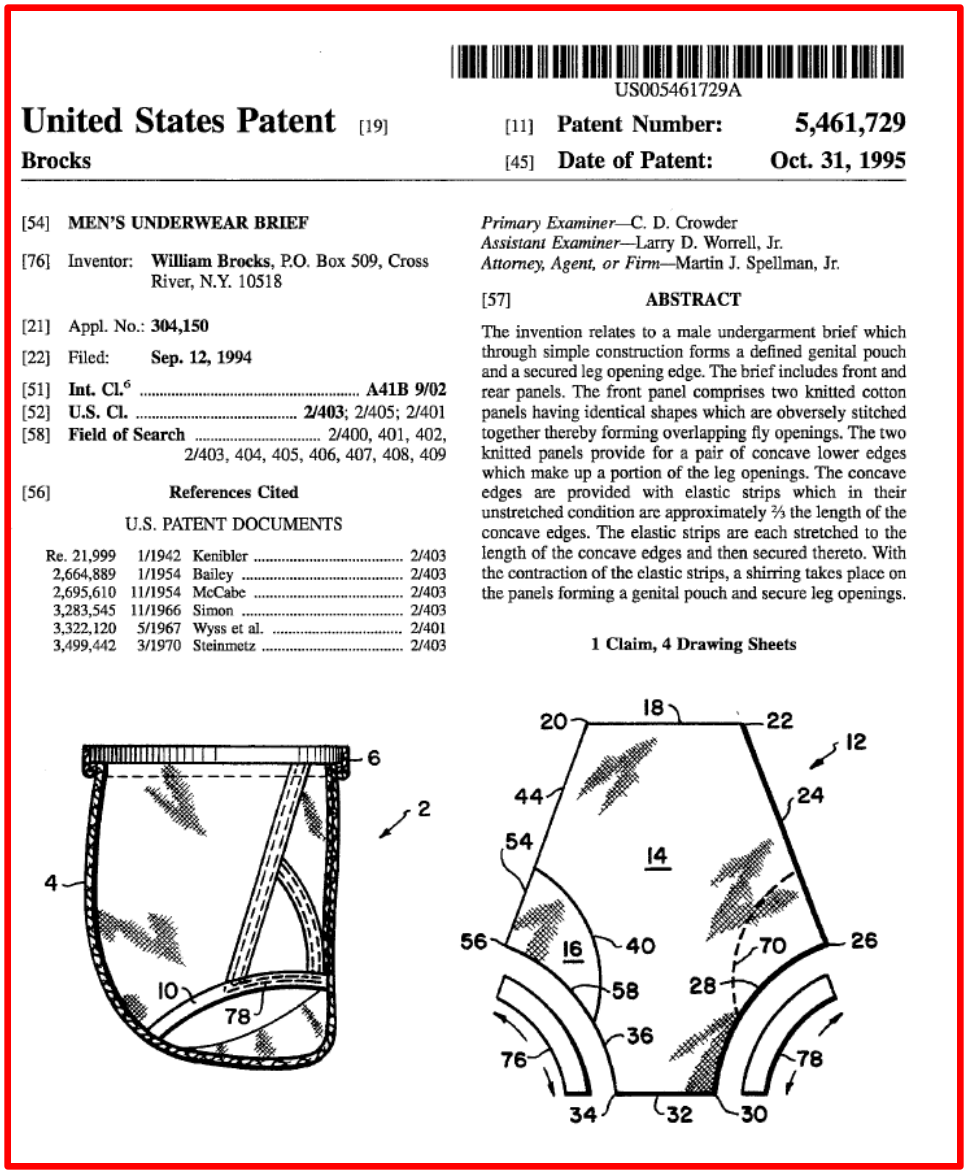

US005461729A

United States Patent [19]

Brocks

[11] **Patent Number: 5,461,729**

[45] **Date of Patent: Oct. 31, 1995**

[54] **MEN'S UNDERWEAR BRIEF**

[76] Inventor: **William Brocks**, P.O. Box 509, Cross River, N.Y. 10518

[21] Appl. No.: **304,150**

[22] Filed: **Sep. 12, 1994**

[51] **Int. Cl.**[6] **A41B 9/02**

[52] **U.S. Cl.** **2/403**; 2/405; 2/401

[58] **Field of Search** 2/400, 401, 402, 2/403, 404, 405, 406, 407, 408, 409

[56] **References Cited**

U.S. PATENT DOCUMENTS

Re. 21,999	1/1942	Kenibler	2/403
2,664,889	1/1954	Bailey	2/403
2,695,610	11/1954	McCabe	2/403
3,283,545	11/1966	Simon	2/403
3,322,120	5/1967	Wyss et al.	2/401
3,499,442	3/1970	Steinmetz	2/403

Primary Examiner—C. D. Crowder
Assistant Examiner—Larry D. Worrell, Jr.
Attorney, Agent, or Firm—Martin J. Spellman, Jr.

[57] **ABSTRACT**

The invention relates to a male undergarment brief which through simple construction forms a defined genital pouch and a secured leg opening edge. The brief includes front and rear panels. The front panel comprises two knitted cotton panels having identical shapes which are obversely stitched together thereby forming overlapping fly openings. The two knitted panels provide for a pair of concave lower edges which make up a portion of the leg openings. The concave edges are provided with elastic strips which in their unstretched condition are approximately ⅔ the length of the concave edges. The elastic strips are each stretched to the length of the concave edges and then secured thereto. With the contraction of the elastic strips, a shirring takes place on the panels forming a genital pouch and secure leg openings.

1 Claim, 4 Drawing Sheets

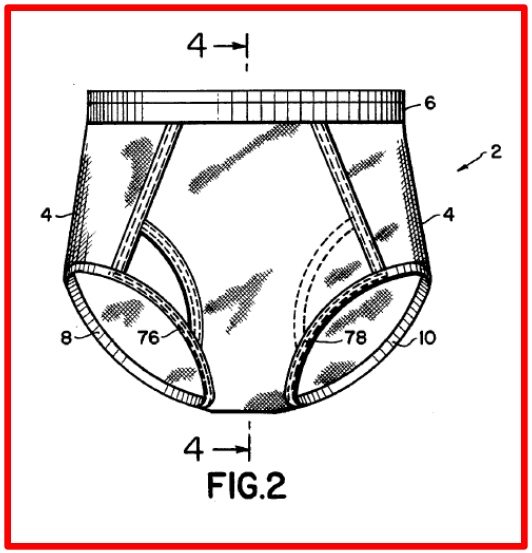

FIG.2

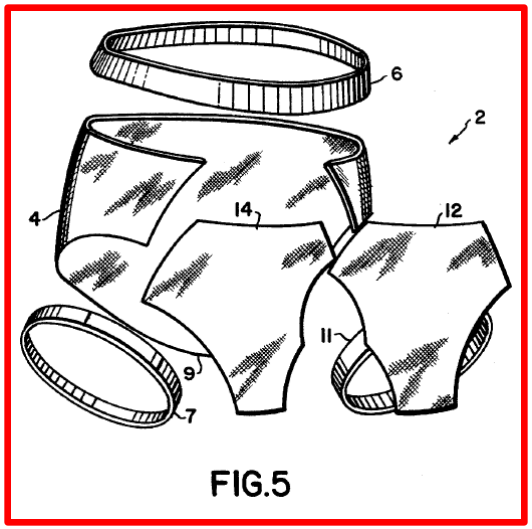

FIG.5

Source: POR at 11-13; EX 1008 (Fig. 5 is "a perspective exploded view of the various components of the brief of the invention.")

BROCKS

- Brocks simply adds elastic to the leg holes of underwear
- Brocks' elastic prevents the scrotum from slipping out of the leg holes
- Brocks does not have a Stretch Panel
- Brocks traps the genitals against the body
- Brocks does not separate the genitals from the body

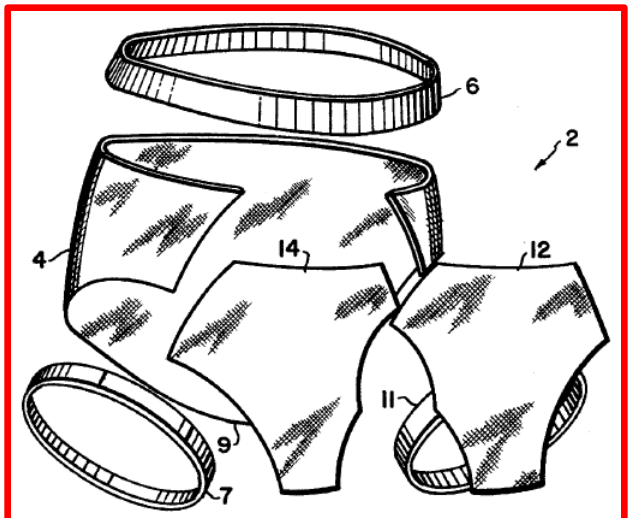

FIG.5

Source: POR at 11-12, 43-46, 62; EX 1008 (Fig. 5 is "a perspective exploded view … of the brief of the invention."); EX2013 ¶¶29-35, 50-54, 72-80

Kitsch in View of Brocks Does Not Render Claim 1 of the ’974 Patent Obvious

PERSON OF ORDINARY SKILL IN THE ART

- To determine the level of ordinary skill, the Board considers various factors, including "1) the types of problems encountered in the art; 2) the prior art solutions to those problems; 3) the rapidity with which innovations are made; 4) the sophistication of the technology; and 5) the educational level of active workers in the field."

  Ruiz v. A.B. Chance Co., 234 F.3d 654, 666–67 (Fed. Cir. 2000) (citing *Custom Accessories, Inc. v. Jeffrey-Allan Indus., Inc.*, 807 F.2d 955, 962 (Fed. Cir. 1986)); *Wangs Alliance Corp. v. Koninklijke Philips N.V.*, No. IPR2015-01290, Paper 63, 13-16 (Nov. 23, 2016).

- It is more difficult to establish obviousness under a lower level of ordinary skill.

  Kinetic Concepts, Inc. v. Smith & Nephew, Inc., 688 F.3d 1342, 1366 (Fed. Cir. 2012).

- Petitioner concedes, and Patent Owner agrees, that the level of skill in the art is low

Source: POR at 19-21

OBVIOUSNESS

- An obviousness determination requires "more than a mere showing that the prior art includes separate references covering each separate limitation in a claim." It requires the additional showing that a person of ordinary skill at the time of the invention would have selected and combined the prior art elements in the normal course of research and development to yield the claimed invention.

  Unigene Labs., Inc. v. Apotex, Inc., 655 F.3d 1352, 1360 (Fed. Cir. 2011) (citing *KSR*, 550 U.S. at 418)

- "The standard of obviousness is not whether in hindsight, it seems elementary that someone would have combined ... certain elements in the prior art to form the invention in question."

  Winner Int'l Royalty Corp. v. Wang, 11 F.Supp.2d 18, 24 (D.D.C. 1998), *aff'd.*, 202 F.3d 1340 (Fed. Cir. 2000) (citing *W.L. Gore & Assocs., Inc. v. Garlock, Inc.*, 721 F.2d 1540, 1551 (Fed. Cir. 1983)

OBVIOUSNESS

- Petitioner must demonstrate that a person of ordinary skill in the art would have been motivated to combine the teachings of Kitsch and Brocks to derive the claimed subject matter with a reasonable expectation of success.

  Procter & Gamble Co. v. Teva Pharms. USA, Inc., 566 F.3d 989, 994 (Fed. Cir. 2009); *Apotex Inc. v. Wyeth LLC*, No. IPR2014-00115, Paper 94 (Apr. 20, 2015).

- Mere "conclusory statements" are insufficient; "there must be some articulated reasoning with some rational underpinning to support the legal conclusion of obviousness."

  KSR Int'l Co. v Teleflex Inc., 550 U.S. 398 at 418 (2007)

KITSCH IN VIEW OF BROCKS DOES NOT RENDER CLAIM 1 OBVIOUS

- Both trap the genitals against the body – the ’974 Patent surrounds the genitals

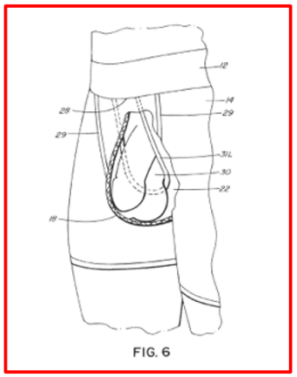

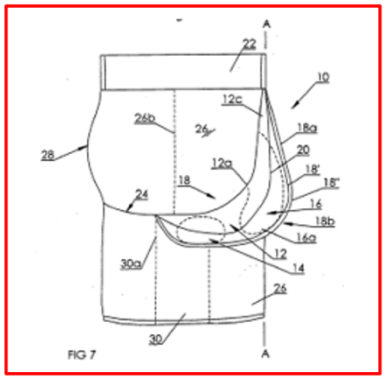

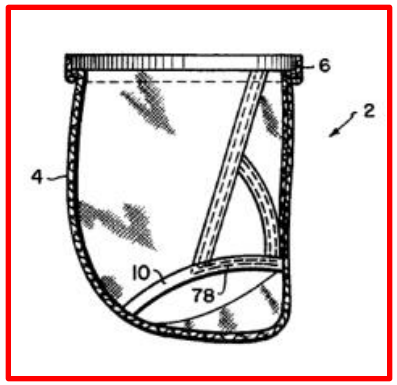

- No motivation for a POSITA to combine Kitsch and Brocks without using the ’974 Patent as a roadmap
  - No reason to join Kitsch’s side panels together
  - No motivation to add Brocks’ elastic to Kitsch
- Combining Kitsch and Brocks just results in Kitsch’s side panels and Brocks’ elasticized leg holes
- Neither Kitsch nor Brocks, alone or together, disclose all elements of independent Claim 1

Source: POR at 12, 31, 36, 42-46; EX 1001 at Fig. 6; EX 1007 at Fig. 7; EX 1008 at Fig. 4

Kitsch in View of Brocks Does Not Render Claims 2-13, 15 or 16 of the ’974 Patent Obvious

KITSCH IN VIEW OF BROCKS DOES NOT RENDER DEPENDENT CLAIMS 2-13 AND 15-16 OBVIOUS

2. A male garment according to claim **1** wherein the stretch panel has asymmetrical stretch characteristics such that the stretch panel stretches more easily in a direction parallel to the waistband and less easily in a direction at right angles to the waistband.

3. A male garment according to claim **1** wherein the stretch panel is rectangular and the opening is U-shaped.

4. A male garment according to claim **3** wherein the stretch panel comprises a fabric having a stretch of at least 30%.

5. A male garment according to claim **1** wherein the top location is the waistband seam and the bottom location is the first seam, and a length measured along material of the front portion from the first seam to the waistband seam exceeds a length measured along the fabric of the stretch panel, when unstretched, by at least 30%.

6. A male garment according to claim **1** wherein the garment is a pair of undershorts.

Source: EX 1001

KITSCH IN VIEW OF BROCKS DOES NOT RENDER DEPENDENT CLAIMS 2-13 AND 15-16 OBVIOUS

7. A male garment according to claim **1** wherein the stretch panel comprises a fabric different from a fabric of the body.

8. A male garment according to claim **1** wherein the opening has a width in excess of 2 cm.

9. A male garment according to claim **1** wherein:

the front portion depends downwardly from the waistband and the front portion is formed to provide the pouch at a mid-section thereof; the stretch panel is positioned to be disposed forward of the wearer's perineum when the garment is worn, whereby, in use, a scrotum of the wearer of the garment is supported underneath by the stretch panel to contain the wearer's penis and scrotum in the pouch.

10. A male garment according to claim **1**, wherein the elastically resilient four-way stretch material is comprised of a spandex blend.

11. A male garment according to claim **1**, wherein the stretch panel is fastened to the front portion while in a pre-stretched condition while the front portion is less stretched, whereby the stretch panel is biased to hold the opening open while the garment is held in position to be put on.

12. A male garment according to claim **11**, wherein the front portion is attached to a rear portion of the body that depends from the waistband at a seam disposed forward of the perineum region of the wearer, and wherein a bottom edge of the stretch panel is fastened to the seam.

13. A male garment according to claim **1** wherein the opening has a U-shape when the stretch panel is in a relaxed state.

14. A male garment according to claim **1** wherein the stretch panel is formed from a single unitary piece of woven fabric.

15. A male garment according to claim **1** wherein the pouch comprises a dart seam stitched along a bottom portion of the pouch and centrally to provide extra volume in front of and underneath the genitals of the wearer.

16. A male garment according to claim **1** wherein the stretch panel is rectangular and the opening has a rounded bottom edge and opposing side edges that are spaced apart from one another on either side of the opening.

17. A male garment according to claim **1**, wherein the body includes a crotch panel extending between the leg openings and joined to the front portion along a first seam.

* * * * *

Source: EX 1001

KITSCH IN VIEW OF BROCKS DOES NOT RENDER DEPENDENT CLAIM 2 OBVIOUS

- Combining Kitsch and Brocks does not render Claim 2 obvious
- Claim 2: "the stretch panel has asymmetrical stretch characteristics such that the stretch panel stretches more easily in a direction parallel to the waistband and less easily in a direction at right angles to the waistband."
- Kitsch
  - No asymmetrical stretch characteristic
  - Does not stretch parallel to the waistband
  - Side panels are fences

Source: POR at 57

KITSCH IN VIEW OF BROCKS DOES NOT RENDER DEPENDENT CLAIM 3 OBVIOUS

- Combining Kitsch and Brocks does not render Claim 3 obvious
- Claim 3: "wherein the stretch panel is rectangular and the opening is U-shaped"
- Kitsch
  - No Stretch Panel
  - Side panels are not rectangular
  - No opening

Source: POR at 57-58

KITSCH DOES NOT DISCLOSE CLAIM 3 NO RECTANGULAR STRETCH PANEL

- ’974 Patent’s Stretch Panel is generally rectangular

> In the illustrated embodiment, stretch panel **22** is generally rectangular. The length of attachment of stretch panel **22**

- Kitsch’s side panels are not rectangular

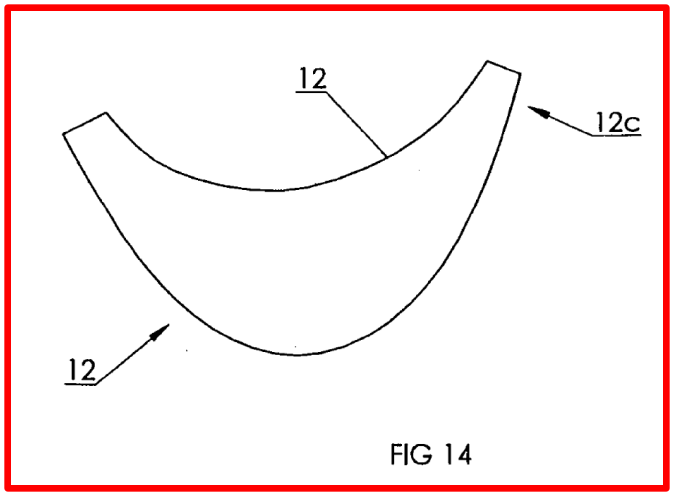

Source: POR at 14; EX 1001 at 4:37-38; EX 1007 at Fig. 14

KITSCH DOES NOT DISCLOSE CLAIM 3 NO RECTANGULAR STRETCH PANEL

- Petitioner's expert Wagner called Kitsch's side panels "generally rectangular" before admitting they were shaped like boomerangs:

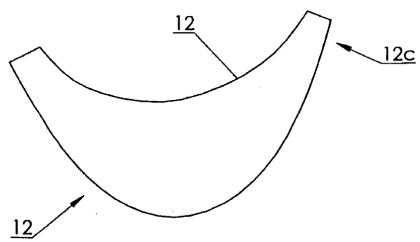

FIG 14

12 Q. Is that shape rectangle?
13 A. It's generally rectangular when it's laid into
14 the garment. It's rectangularly.

3 Q. A rectangle has four straight edges; does it not?
4 A. It does.
5 Q. Does Figure 14 have four straight edges?
6 A. Not continuously. But I did say it was generally
7 rectangular.
8 Q. Figure 14 looks like a boomerang; doesn't it?
9 A. Yes.

Source: POR at 14; EX 1007 at Fig. 14; EX 2012 at 101:12-14, 102:3-9

KITSCH IN VIEW OF BROCKS DO NOT RENDER DEPENDENT CLAIMS 4-5 OBVIOUS

- Combining Carrillo and Brocks do not render Claims 4-5 obvious
- Claim 4: "wherein the stretch panel comprises a fabric having a stretch of at least 30%."
- Claim 5: "wherein the top location is the waistband seam and the bottom location is the first seam, and a length measured along material of the front portion from the first seam to the waistband seam exceeds a length measured along the fabric of the stretch panel, when unstretched, by at least 30%."
- Kitsch does not disclose stretch characteristics of its side panels
- Brocks does not indicate a stretch of at least 30%

Source: POR at 58-59

KITSCH IN VIEW OF BROCKS DO NOT RENDER DEPENDENT CLAIMS 6-7, 13 OBVIOUS

- Combining Kitsch and Brocks do not render Claims 6, 7 or 13 obvious
- Claim 6: "wherein the garment is a pair of undershorts."
- Claim 7: "wherein the stretch panel comprises a fabric different from a fabric of the body."
- Claim 13: "wherein the opening has a U-shape when the stretch panel is in a relaxed state."
- Kitsch and Brocks fail to render Claim 1 obvious, so they do not render Claims 6, 7 or 13 obvious

Source: POR at 59-60

KITSCH IN VIEW OF BROCKS DOES NOT RENDER DEPENDENT CLAIM 8 OBVIOUS

- Combining Kitsch and Brocks does not render Claim 8 obvious
- Claim 8: "wherein the opening has a width in excess of 2 cm."
- Kitsch
  - No Stretch Panel
  - No opening
  - A POSITA would not look at Kitsch and think of a 2 cm width for a non-disclosed opening

Source: POR at 60

KITSCH IN VIEW OF BROCKS DOES NOT RENDER DEPENDENT CLAIM 9 OBVIOUS

- Combining Kitsch and Brocks does not render Claim 9 obvious
- Claim 9: "the front portion depends downwardly from the waistband and the front portion is formed to provide the pouch at a mid-section thereof; the stretch panel is positioned to be disposed forward of the wearer's perineum when the garment is worn, whereby, in use, a scrotum of the wearer of the garment is supported underneath by the stretch panel to contain the wearer's penis and scrotum in the pouch."
- Kitsch discloses no Stretch Panel

Source: POR at 60-61

KITSCH IN VIEW OF BROCKS DOES NOT RENDER DEPENDENT CLAIM 10 OBVIOUS

- Combining Kitsch and Brocks does not render Claim 10 obvious
- Claim 10: "wherein the elastically resilient four-way stretch material is comprised of a spandex blend."
- Kitsch and Brocks fail to render Claim 1 obvious, so they fail to render Claim 10 obvious

Source: POR at 61-62

KITSCH IN VIEW OF BROCKS DOES NOT RENDER DEPENDENT CLAIM 12 OBVIOUS

- Combining Kitsch and Brocks does not render Claim 12 obvious
- Claim 12: "wherein the front portion is attached to a rear portion of the body that depends from the waistband at a seam disposed forward of the perineum region of the wearer, and wherein a bottom edge of the stretch panel is fastened to the seam."
- Kitsch discloses side panels, not a Stretch Panel

Source: POR at 63-64

KITSCH IN VIEW OF BROCKS DOES NOT RENDER DEPENDENT CLAIM 15 OBVIOUS

- Combining Kitsch and Brocks does not render Claim 15 obvious
- Claim 15: "wherein the pouch comprises a dart seam stitched along a bottom portion of the pouch and centrally to provide extra volume in front of and underneath the genitals of the wearer."
- Kitsch and Brocks fail to render Claim 1 obvious, so they fail to render Claim 15 obvious

Source: POR at 64

KITSCH IN VIEW OF BROCKS DOES NOT RENDER DEPENDENT CLAIM 16 OBVIOUS

- Combining Kitsch and Brocks does not render Claim 16 obvious
- Claim 16: "wherein the stretch panel is rectangular and the opening has a rounded bottom edge and opposing side edges that are spaced apart from one another on either side of the opening."
- Kitsch's side panels are not rectangular
- Kitsch has no opening, so it cannot have an opening with a rounded bottom edge

Source: POR at 65

Carrillo in View of Brocks Does Not Render Claim 1 of the ’974 Patent Obvious

Carrillo Does Not Disclose Multiple Elements of Claim 1 of the ’974 Patent

CARRILLO DOES NOT DISCLOSE MULTIPLE ELEMENTS OF THE ’974 PATENT

1[d] the stretch panel comprising a sheet of elastically resilient four-way stretch material having

1[g] [i] a length when unstretched smaller than a length measured along the front portion between the top and bottom locations and **1[g][ii]** a width when unstretched smaller than a width measured along the front portion between the side seams such that **1[g][iii]** the front portion is gathered from side-to-side and top to bottom by the stretch panel and defines a three-dimensional pouch between the stretch panel and the front portion for receiving the wearer's genitals and holding the wearer's genitals while the garment is being worn.

Source: POR at 28-42

CARRILLO

(12) SOLICITUD INTERNACIONAL PUBLICADA EN VIRTUD DEL TRATADO DE COOPERACIÓN EN MATERIA DE PATENTES (PCT)

(19) Organización Mundial de la Propiedad Intelectual
Oficina internacional

(43) Fecha de publicación internacional
31 de Mayo de 2001 (31.05.2001)

PCT

(10) Número de Publicación Internacional
WO 01/37687 A1

(51) Clasificación Internacional de Patentes[7]: A41B 9/02

(21) Número de la solicitud internacional: PCT/ES00/00434

(22) Fecha de presentación internacional:
16 de Noviembre de 2000 (16.11.2000)

(25) Idioma de presentación: español

(26) Idioma de publicación: español

(30) Datos relativos a la prioridad:
U 9902953
23 de Noviembre de 1999 (23.11.1999) ES

(71) Solicitante e
(72) Inventor: GALIANA CARRILLO, Mauricio [ES/ES]; Calle Virgen Maria, 7-5°A-3, E-28007 Madrid (ES).

(74) Mandatario: TORO GORDILLO, Ignacio Maria; Calle Viriato, 56-1°-Izda., E-28010 Madrid (ES).

(81) Estados designados *(nacional)*: AE, AG, AL, AM, AT, AU, AZ, BA, BB, BG, BR, BY, BZ, CA, CH, CN, CR, CU, CZ, DE, DK, DM, DZ, EE, ES, FI, GB, GD, GE, GH, GM, HR, HU, ID, IL, IN, IS, JP, KE, KG, KP, KR, KZ, LC, LK, LR, LS, LT, LU, LV, MA, MD, MG, MK, MN, MW, MX, MZ, NO, NZ, PL, PT, RO, RU, SD, SE, SG, SI, SK, SL, TJ, TM, TR, TT, TZ, UA, UG, US, UZ, VN, YU, ZA, ZW.

(84) Estados designados *(regional)*: patente ARIPO (GH, GM, KE, LS, MW, MZ, SD, SL, SZ, TZ, UG, ZW), patente

[Continúa en la página siguiente]

(54) Title: HYGIENIC GARMENT FOR MEN'S UNDERWEAR

(54) Título: PRENDA HIGIENICA PARA ROPA INTERIOR DE HOMBRE

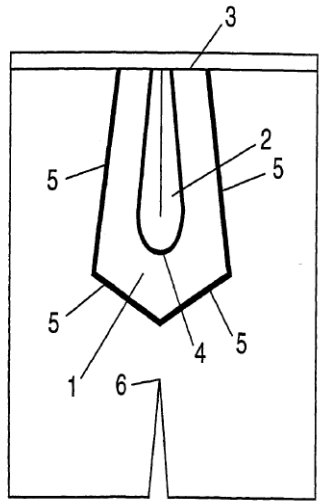

(57) Abstract: The invention relates to a hygienic elastic garment for men's underwear, which forms part and is sewn to classic underpants. It has a tear-shaped vertical opening extending from the elastic on the waistband of the underpants up to a given distance above the sewing in the top block depending on the model. By introducing the testicles through said opening, the base of said opening is located between the testicles and the groin. The testicles tend to be separated towards the front due to the fact that the garment is sewn to the inner front part of the underpants, thereby reducing contact and direct friction between the testicles and the groin. Said garment can provide relief for many individuals who suffer itching, eczema, rash. etc. caused by perspiration and friction.

(57) Resumen: Prenda higiénica para ropa interior de hombre, elástica, que forma parte del calzoncillo estándar mediante cosido. Dispone de una abertura vertical en forma de lágrima que va desde el elástico de la cinturilla del calzoncillo hasta una cierta distancia por encima de la costura del tiro, dependiendo del modelo. Introduciendo los testículos por dicha abertura, la base de la misma queda situada entre éstos y las ingles. Al estar cosida la prenda a la parte delantera interior del calzoncillo, la tendencia es a separar hacia delante los testículos, consiguiendo aminorar el continuo contacto y el rozamiento directo entre éstos y las ingles. Esta prenda puede procurar alivio para muchos de aquéllos que sufren picores, eccemas, erupciones, etc. provocados por la sudoración y el rozamiento.

WO 01/37687 A1

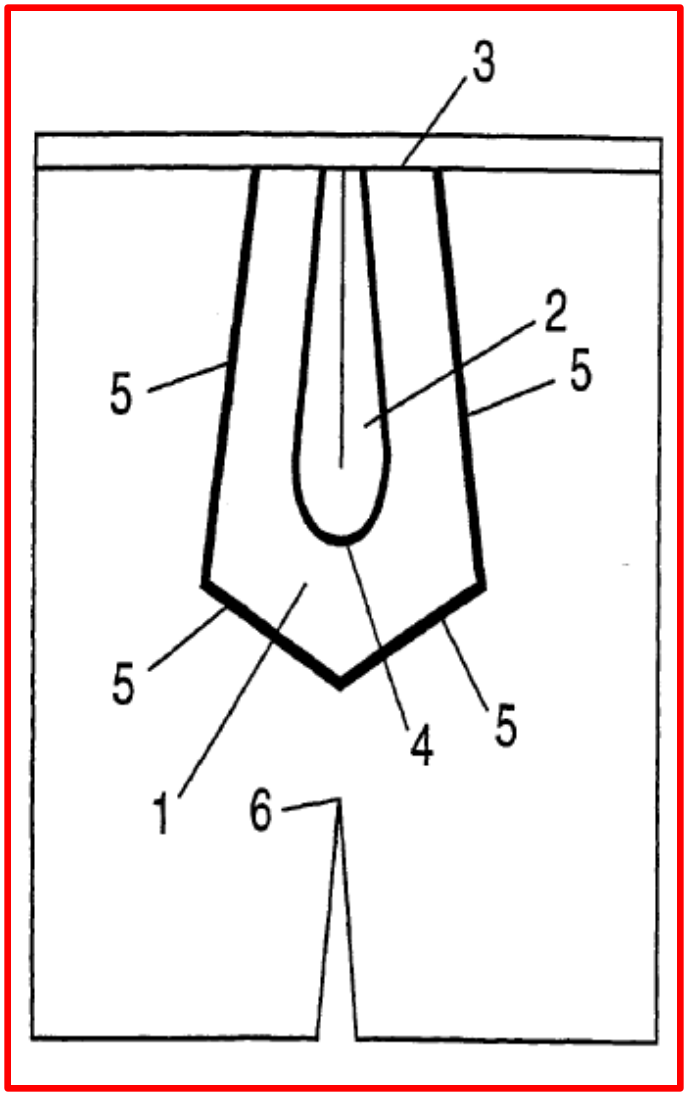

Source: POR at 13-14; PO Sur-reply at 47-56; EX 1009

CARRILLO DOES NOT DISCLOSE 1[d]

What is claimed is:

1. A male garment comprising:

a body including a front portion and having leg openings for a wearer's legs;

a waistband attached by a waistband seam at an upper edge of the body;

a stretch panel attached to the body inside the front portion, the stretch panel comprising a sheet of elasti-

edge attached to the body at a top location and a bottom edge attached to the body at a bottom location, side

portion and an opening for receiving a wearer's geni-

a stretch panel having resilient elastic both in a direction between the top edge and the bottom edge and in a direction between the side edges, the stretch panel having a length when unstretched smaller than a length measured along the front portion between the top and bottom locations and a width when unstretched smaller than a width measured along the front portion between the side seams such that the front portion is gathered from side-to-side and top-to-bottom by the stretch panel and defines a three-dimensional pouch between the stretch panel and the front portion for receiving the wearer's genitals and holding the wearer's genitals while the garment is being worn.

1[d] the stretch panel comprising a sheet of elastically resilient four-way stretch material having

Source: POR at 4; Ex 1001

CARRILLO DOES NOT DISCLOSE 1[d]
NO FOUR-WAY STRETCH

- Carrillo teaches an insert sewn to the front of underwear
- Carrillo does not teach four-way stretch fabric for his insert
- A POSITA would not have understood that Carrillo taught a hydrophobic fabric

Source: POR at 47-49; EX. 2013, at ¶96-99; EX. 1010 at 2

CARRILLO DOES NOT DISCLOSE 1[g]

1[g] [i] a length when unstretched smaller than a length measured along the front portion between the top and bottom locations and **1[g][ii]** a width when unstretched smaller than a width measured along the front portion between the side seams such that **1[g][iii]** the front portion is gathered from side-to-side and top-to-bottom by the stretch panel and defines a three-dimensional pouch between the stretch panel and the front portion for receiving the wearer's genitals and holding the wearer's genitals while the garment is being worn.

Source: POR at 4-5; Ex 1001

’974 Patent Specification On 1[g]

SUMMARY OF THE INVENTION

Aspects of the invention provide a range of garments for men and boys. The garments provide a stretch panel having an opening for receiving a wearer’s genitals. A pouch is defined between the stretch panel and a front of the garment.

This invention relates to garments for men that include pouches to receive the wearer’s genitalia. Such garments may provide enhanced comfort for the wearer.

When undershorts **10** are held open as shown for example in FIG. **3** with waistband **12** under gentle tension and body **14** hanging freely, stretch panel **22** is contracted and pulled away from front area **18** so as to provide a three-dimensional pouch **20** between stretch panel **22** and front portion **18**. The

has an oval or elliptical shape (not shown). Regardless of the particular shape of opening **30** stretch panel **22** is configured to define opening **30** and to provide support around and underneath the scrotum of the wearer in order to comfortably position the wearer’s genitals forward into pouch **20**.

U.S. Patent Nov. 17, 2020 Sheet 5 of 9 US 10,834,974 B2

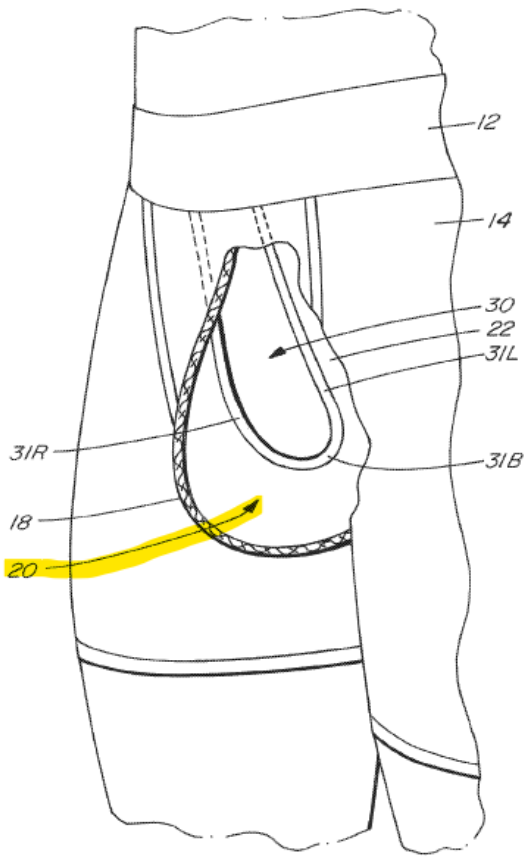

FIG. 5

Source: POR 5-9, 49-51; EX 1001 at 1:36-41, 2:30-32, 2:62-66, 3:14-19, Fig. 5; EX2013 ¶¶29-35, 50-54

’974 Patent Specification On 1[g]

As can be seen in FIG. **3**, holding the waistband of undershorts open as one would do to put undershorts **10** on naturally causes pouch **20** to be open to receive a wearer’s genitals which can drop into place in pouch **20** through opening **30** as undershorts **10** are put on. In other words, when undershorts **10** is held by a man so as to be in a ready-to-wear position (i.e. held in mid-air by the waist-band), the weight of undershorts **10** holds stretch panel **22** so that opening **30** is open and clearly defined. The man’s genitals are thus naturally guided through opening **30** and positioned forward into pouch **20** as a result of this bias. As

In use the wearer’s scrotum may be supported underneath by the bottom portion of the stretch panel with the wearer’s penis and scrotum contained in the pouch.

After assembly, stretch panel **22** can contract. This gathers the material of front portion **18** and helps to form pouch **20** to have a three-dimensional volume open to receive a wearer’s genitalia even when undershorts **10** are being suspended from waist hand **12** in preparation for being put on.

Source: POR at 5-8 (“*see also* FIG. 3”), 9, 28 (“FIG. 3 and FIG. 6”), 29-30; EX 1001 at 3:21-33, 3:47-49, 6:16-21; EX2013 ¶¶29-35, 50-54

CARRILLO DOES NOT DISCLOSE 1[g]
NO POUCH, NO GATHERING, NO SUPPORT

- Carrillo does not have a pouch
- Carrillo does not teach supporting the scrotum
- Carrillo teaches no gathering of its pocket
- Carrillo does not teach a three-dimensional pouch

Source: POR at 13-14, 46-51; EX. 2013, at ¶¶47-49, 102-116; EX. 1010 at 3

CARRILLO DOES NOT DISCLOSE 1[g]

- A user of Carrillo would have to manipulate himself or the pocket to insert his genitals into the opening because no gathering is taught

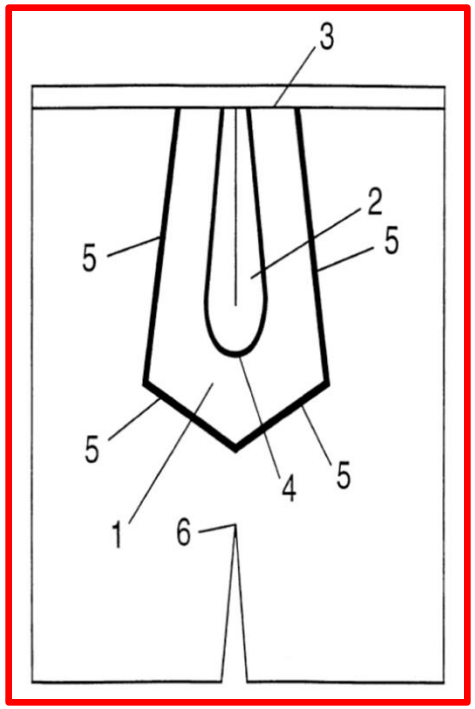

Source: POR at 13-14, 46-51; EX. 2013, at ¶¶47-49, 102-116; EX. 1010 at 3

Carrillo in View of Brocks Does Not Render Claim 1 of the ’974 Patent Obvious

BROCKS

- Brocks simply adds elastic to the leg holes of underwear
- Brocks' elastic prevents the scrotum from slipping out of the leg holes
- Brocks does not have a Stretch Panel
- Brocks traps the genitals against the body
- Brocks does not separate the genitals from the body

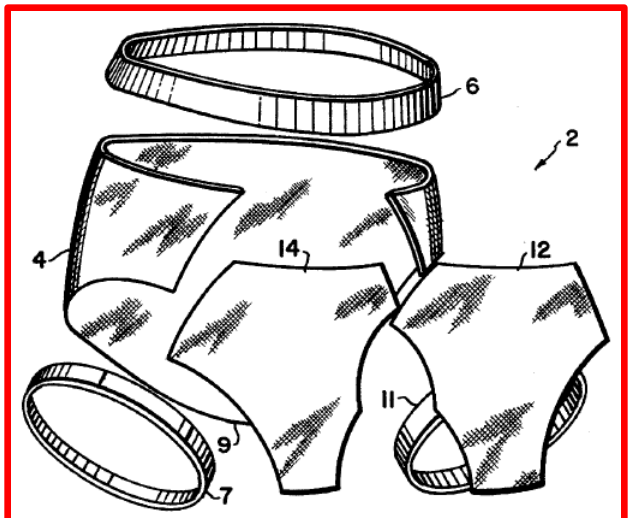

FIG.5

Source: POR at 11-12, 43-46, 62; EX 1008 (Fig. 5 is "a perspective exploded view … of the brief of the invention."); EX2013 ¶¶29-35, 50-54, 72-80

CARRILLO IN VIEW OF BROCKS DOES NOT RENDER CLAIM 1 OBVIOUS

- Petitioner again uses hindsight reconstruction
- No motivation for a POSITA to combine Carrillo and Brocks without using the ’974 Patent as a roadmap
  - No reason to use Brocks’ elastic to gather Carrillo’s pocket
  - Brocks prevents scrotum from falling out of leg holes; Carrillo prevents contact between the testicles and the groin
- Combining Carrillo and Brocks does not create the gathered, 3-D pouch from the ’974 Patent
- Petitioner does not show how Carrillo and Brocks would be combined to lead to the ’974 Patent

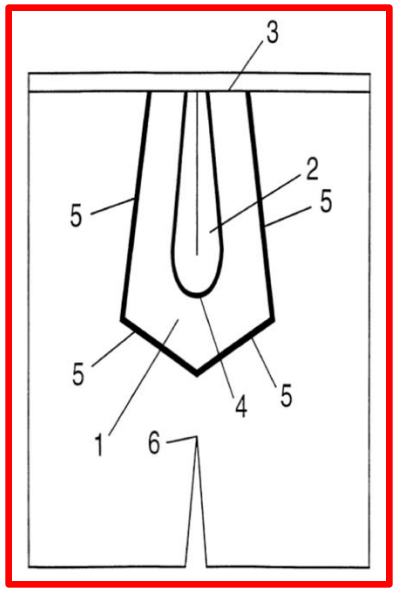

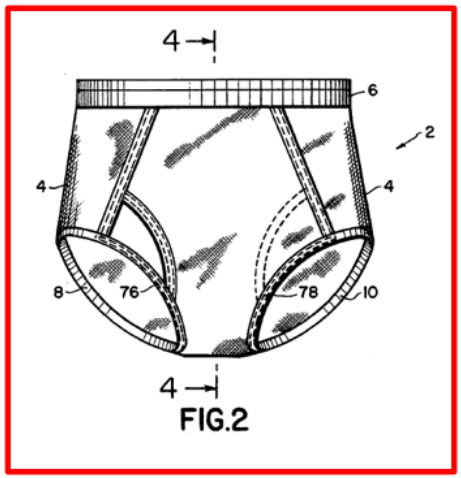

Source: POR at 11-14, 49-56; EX 1010 at Figure; EX 1008 at Fig. 2; EX. 2013, at ¶¶47-49, 102-116

Carrillo in View of Brocks Does Not Render Claims 2-9, 11, 13 or 16 of the ’974 Patent Obvious

CARRILLO IN VIEW OF BROCKS DOES NOT RENDER DEPENDENT CLAIMS 2-9, 11, 13 and 16 OBVIOUS

2. A male garment according to claim **1** wherein the stretch panel has asymmetrical stretch characteristics such that the stretch panel stretches more easily in a direction parallel to the waistband and less easily in a direction at right angles to the waistband.

3. A male garment according to claim **1** wherein the stretch panel is rectangular and the opening is U-shaped.

4. A male garment according to claim **3** wherein the stretch panel comprises a fabric having a stretch of at least 30%.

5. A male garment according to claim **1** wherein the top location is the waistband seam and the bottom location is the first seam, and a length measured along material of the front portion from the first seam to the waistband seam exceeds a length measured along the fabric of the stretch panel, when unstretched, by at least 30%.

6. A male garment according to claim **1** wherein the garment is a pair of undershorts.

Source: EX 1001

KITSCH IN VIEW OF BROCKS DOES NOT RENDER DEPENDENT CLAIMS 2-13 AND 15-16 OBVIOUS

7. A male garment according to claim 1 wherein the stretch panel comprises a fabric different from a fabric of the body.

8. A male garment according to claim 1 wherein the opening has a width in excess of 2 cm.

9. A male garment according to claim 1 wherein:

the front portion depends downwardly from the waistband and the front portion is formed to provide the pouch at a mid-section thereof; the stretch panel is positioned to be disposed forward of the wearer's perineum when the garment is worn, whereby, in use, a scrotum of the wearer of the garment is supported underneath by the stretch panel to contain the wearer's penis and scrotum in the pouch.

10. A male garment according to claim 1, wherein the elastically resilient four-way stretch material is comprised of a spandex blend.

11. A male garment according to claim 1, wherein the stretch panel is fastened to the front portion while in a pre-stretched condition while the front portion is less stretched, whereby the stretch panel is biased to hold the opening open while the garment is held in position to be put on.

12. A male garment according to claim 11, wherein the front portion is attached to a rear portion of the body that depends from the waistband at a seam disposed forward of the perineum region of the wearer, and wherein a bottom edge of the stretch panel is fastened to the seam.

13. A male garment according to claim 1 wherein the opening has a U-shape when the stretch panel is in a relaxed state.

14. A male garment according to claim 1 wherein the stretch panel is formed from a single unitary piece of woven fabric.

15. A male garment according to claim 1 wherein the pouch comprises a dart seam stitched along a bottom portion of the pouch and centrally to provide extra volume in front of and underneath the genitals of the wearer.

16. A male garment according to claim 1 wherein the stretch panel is rectangular and the opening has a rounded bottom edge and opposing side edges that are spaced apart from one another on either side of the opening.

17. A male garment according to claim 1, wherein the body includes a crotch panel extending between the leg openings and joined to the front portion along a first seam.

* * * * *

Source: EX 1001

CARRILLO IN VIEW OF BROCKS DOES NOT RENDER DEPENDENT CLAIM 2 OBVIOUS

- Combining Carrillo and Brocks does not render Claim 2 obvious
- Claim 2: "the stretch panel has asymmetrical stretch characteristics such that the stretch panel stretches more easily in a direction parallel to the waistband and less easily in a direction at right angles to the waistband."
- Carrillo has no asymmetrical stretch characteristic

Source: POR at 57

CARRILLO IN VIEW OF BROCKS DOES NOT RENDER DEPENDENT CLAIM 3 OBVIOUS

- Combining Carrillo and Brocks does not render Claim 3 obvious
- Claim 3: "wherein the stretch panel is rectangular and the opening is U-shaped."
- Carrillo does not render Claim 1 obvious, so it does not render Claim 3 obvious

Source: POR at 57-58

CARRILLO IN VIEW OF BROCKS DO NOT RENDER DEPENDENT CLAIMS 4-5 OBVIOUS

- Combining Carrillo and Brocks do not render Claims 4-5 obvious
- Claim 4: "wherein the stretch panel comprises a fabric having a stretch of at least 30%."
- Claim 5: "wherein the top location is the waistband seam and the bottom location is the first seam, and a length measured along material of the front portion from the first seam to the waistband seam exceeds a length measured along the fabric of the stretch panel, when unstretched, by at least 30%."
- Carrillo does not disclose stretch characteristics of its elastic garment
- Brocks does not indicate a stretch of at least 30%

Source: POR at 58-59

CARRILLO IN VIEW OF BROCKS DO NOT RENDER DEPENDENT CLAIMS 6-7, 13 OBVIOUS

- Combining Carrillo and Brocks do not render Claims 6, 7 or 13 obvious
- Claim 6: "wherein the garment is a pair of undershorts."
- Claim 7: "wherein the stretch panel comprises a fabric different from a fabric of the body."
- Claim 13: "wherein the opening has a U-shape when the stretch panel is in a relaxed state."
- Carrillo and Brocks fail to render Claim 1 obvious, so they do not render Claims 6, 7 or 13 obvious

Source: POR at 59-60

CARRILLO IN VIEW OF BROCKS DOES NOT RENDER DEPENDENT CLAIM 8 OBVIOUS

- Combining Carrillo and Brocks does not render Claim 8 obvious
- Claim 8: "wherein the opening has a width in excess of 2 cm."
- Carrillo does not disclose the width of its opening

Source: POR at 60

CARRILLO IN VIEW OF BROCKS DOES NOT RENDER DEPENDENT CLAIM 9 OBVIOUS

- Combining Carrillo and Brocks does not render Claim 9 obvious
- Claim 9: "the front portion depends downwardly from the waistband and the front portion is formed to provide the pouch at a mid-section thereof; the stretch panel is positioned to be disposed forward of the wearer's perineum when the garment is worn, whereby, in use, a scrotum of the wearer of the garment is supported underneath by the stretch panel to contain the wearer's penis and scrotum in the pouch."
- Carrillo
  - No pouch
  - No support for genitalia

Source: POR at 60-61

CARRILLO IN VIEW OF BROCKS DOES NOT RENDER DEPENDENT CLAIM 11 OBVIOUS

- Combining Carrillo and Brocks does not render Claim 11 obvious
- Claim 11: "wherein the stretch panel is fastened to the front portion while in a pre-stretched condition while the front portion is less stretched, whereby the stretch panel is biased to hold the opening open while the garment is held in position to be put on."
- No biasing to hold the opening open
- Carrillo is not intended to have a 3-D pouch; the wearer must manipulate himself or the pocket to insert his genitalia

Source: POR at 62-63

CARRILLO IN VIEW OF BROCKS DOES NOT RENDER DEPENDENT CLAIM 16 OBVIOUS

- Combining Carrillo and Brocks does not render Claim 16 obvious
- Claim 16: "wherein the stretch panel is rectangular and the opening has a rounded bottom edge and opposing side edges that are spaced apart from one another on either side of the opening."
- Carrillo and Brocks fail to render Claim 1 obvious, so they do not render Claim 16 obvious

Source: POR at 65

Carrillo in View of Brocks and Kitsch Does Not Render Claims 10, 12 or 15 of the ’974 Patent Obvious

CARRILLO IN VIEW OF KITSCH AND BROCKS DOES NOT RENDER DEPENDENT CLAIM 10 OBVIOUS

- Combining Carrillo, Kitsch and Brocks does not render Claim 10 obvious
- Claim 10: "wherein the elastically resilient four-way stretch material is comprised of a spandex blend."
- A POSITA would not use Spandex with Carrillo
- Other than impermissibly using the '974 Patent as a roadmap, no basis to combine Carrillo, Brocks and Kitsch

Source: POR at 61-62

CARRILLO IN VIEW OF KITSCH AND BROCKS DOES NOT RENDER DEPENDENT CLAIM 12 OBVIOUS

- Combining Carrillo, Kitsch and Brocks does not render Claim 12 obvious
- Claim 12: "wherein the front portion is attached to a rear portion of the body that depends from the waistband at a seam disposed forward of the perineum region of the wearer, and wherein a bottom edge of the stretch panel is fastened to the seam."
- Kitsch does not describe a Stretch Panel
- Carrillo does not discuss the perineum
- Other than impermissibly using the '974 Patent as a roadmap, no basis to combine Carrillo, Brocks and Kitsch

Source: POR at 61-62

CARRILLO IN VIEW OF KITSCH AND BROCKS DOES NOT RENDER DEPENDENT CLAIM 15 OBVIOUS

- Combining Carrillo, Kitsch and Brocks does not render Claim 15 obvious
- Claim 15: "wherein the pouch comprises a dart seam stitched along a bottom portion of the pouch and centrally to provide extra volume in front of and underneath the genitals of the wearer."
- Other than impermissibly using the '974 Patent as a roadmap, no basis to combine Carrillo, Brocks and Kitsch

Source: POR at 64

Tommy John, Inc., Petitioner, v. Pakage Apparel, Inc., Patent Owner

IPR No. IPR2024-01163
Patent 10,834,974