US008737913B2

(12) **United States Patent**
Xiao et al.

(10) **Patent No.: US 8,737,913 B2**
(45) **Date of Patent: May 27, 2014**

(54) **METHODS AND SYSTEMS FOR PROVIDING A WIRELESS AUTOMOBILE KEY SERVICE**

(75) Inventors: **Hong Xiao**, Acton, MA (US); **Afshin Moshrefi**, Newburyport, MA (US); **Andre Turner**, Belmont, MA (US); **Dongchen Wang**, Concord, MA (US)

(73) Assignee: **Verizon Patent and Licensing Inc.**, Basking Ridge, NJ (US)

(*) Notice: Subject to any disclaimer, the term of this patent is extended or adjusted under 35 U.S.C. 154(b) by 555 days.

(21) Appl. No.: **12/975,638**

(22) Filed: **Dec. 22, 2010**

(65) **Prior Publication Data**

US 2012/0164989 A1 Jun. 28, 2012

(51) **Int. Cl.**
H04B 5/00 (2006.01)

(52) **U.S. Cl.**
USPC **455/41.1**; 455/41.2; 455/528; 455/456.1; 455/456.3; 455/558; 705/5; 701/2; 701/208

(58) **Field of Classification Search**
USPC 455/411, 41.2, 41.1
See application file for complete search history.

(56) **References Cited**

U.S. PATENT DOCUMENTS

2011/0060480 A1* 3/2011 Mottla et al. 701/2

* cited by examiner

Primary Examiner — Charles Appiah
Assistant Examiner — Randy Peaches

(57) **ABSTRACT**

Systems and methods for providing a wireless automobile key service are disclosed. In one embodiment, a method includes detecting whether the mobile device is connected to the automobile over a first network, launching a wireless automobile key service application on the mobile device when it is detected that the mobile device is connected to the automobile over the first network, and receiving, via the application from an operator of the automobile using the mobile device, a request to issue a command to the automobile. The method further includes determining whether the requested command is a first command or a second command. The method further includes when the requested command is a first command, sending, from the mobile device to a server over a second network, a request to issue the first command to the automobile. The method also includes when the requested command is a second command, sending, from the mobile device to the sever over the second network, a request to issue the second command to the automobile, and receiving, at the mobile device from the server over the second network, status information associated with the automobile.

24 Claims, 10 Drawing Sheets

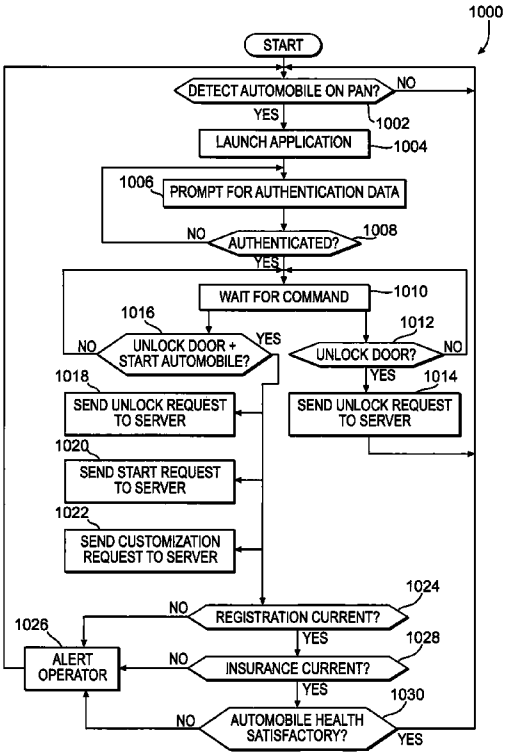

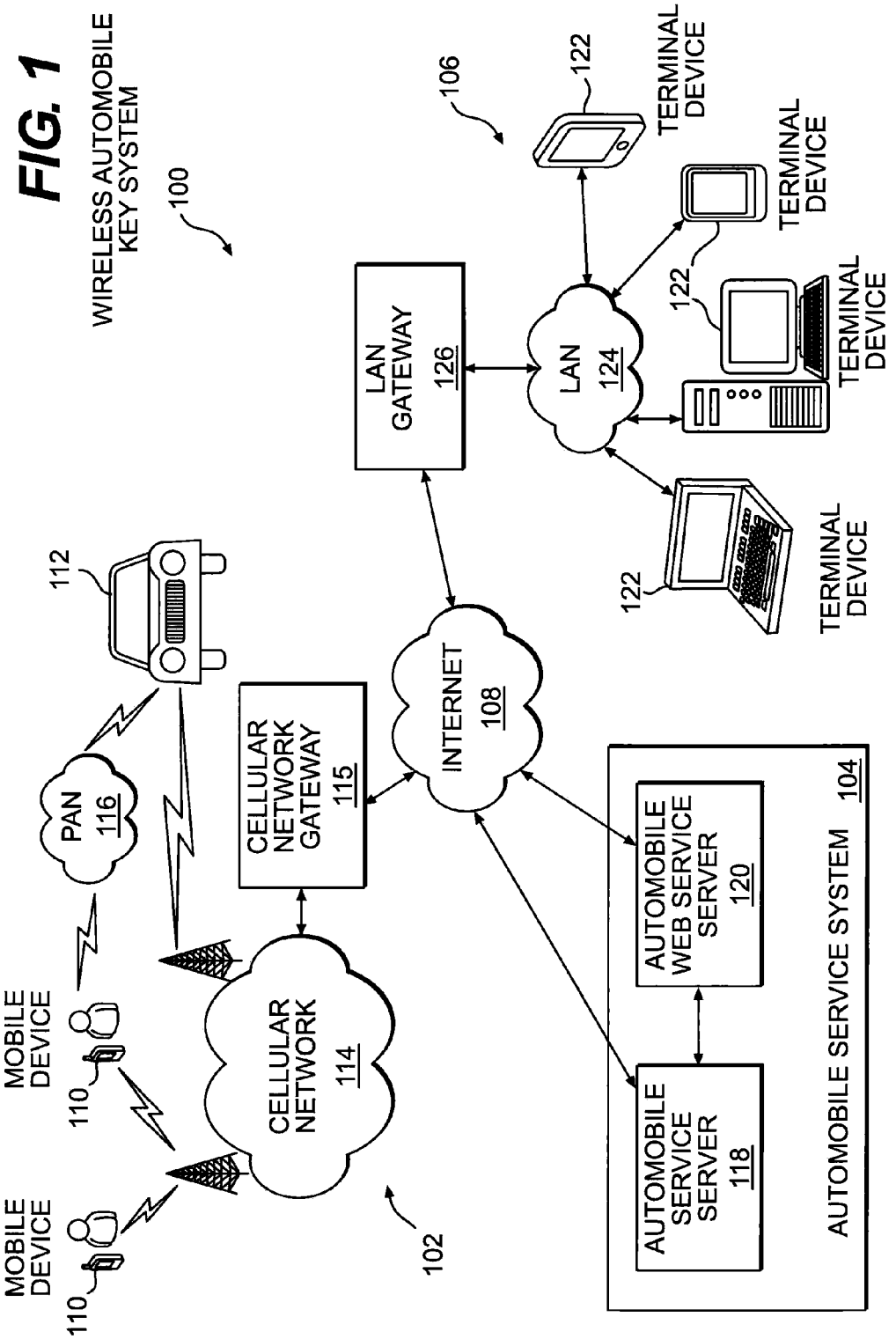
WIRELESS AUTOMOBILE KEY SYSTEM
100
106
122
TERMINAL DEVICE
TERMINAL DEVICE
122
TERMINAL DEVICE
LAN GATEWAY 126
LAN 124
122
TERMINAL DEVICE
112
INTERNET 108
CELLULAR NETWORK GATEWAY 115
PAN 116
AUTOMOBILE WEB SERVICE SERVER 120
AUTOMOBILE SERVICE SERVER 118
AUTOMOBILE SERVICE SYSTEM 104
MOBILE DEVICE
110
CELLULAR NETWORK 114
MOBILE DEVICE
110
102

FIG. 1

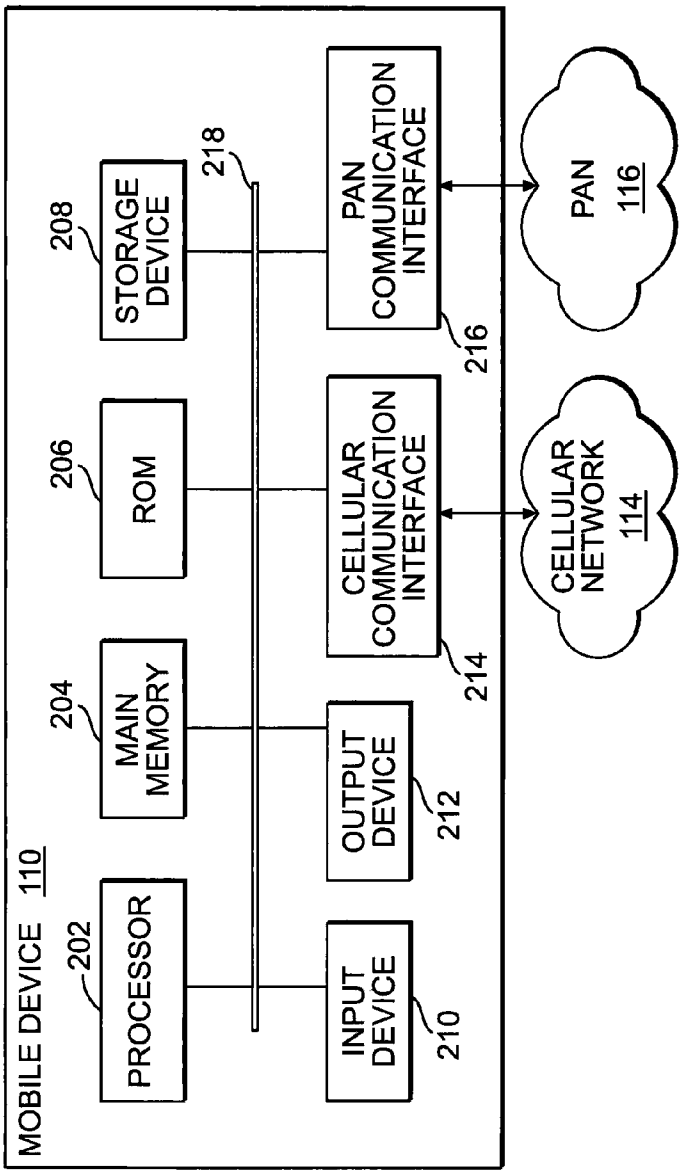
MOBILE DEVICE 110
PROCESSOR
202
MAIN MEMORY
204
ROM
206
STORAGE DEVICE
208
218
INPUT DEVICE
210
OUTPUT DEVICE
212
CELLULAR COMMUNICATION INTERFACE
214
PAN COMMUNICATION INTERFACE
216
CELLULAR NETWORK 114
PAN 116

FIG. 2

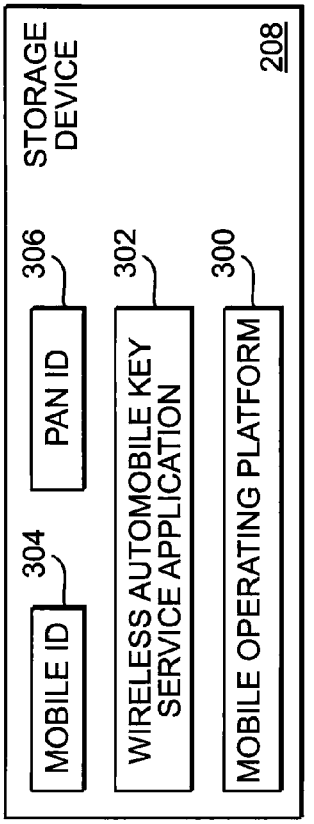
STORAGE DEVICE
208
MOBILE ID
304
PAN ID
306
WIRELESS AUTOMOBILE KEY SERVICE APPLICATION
302
MOBILE OPERATING PLATFORM
300

FIG. 3

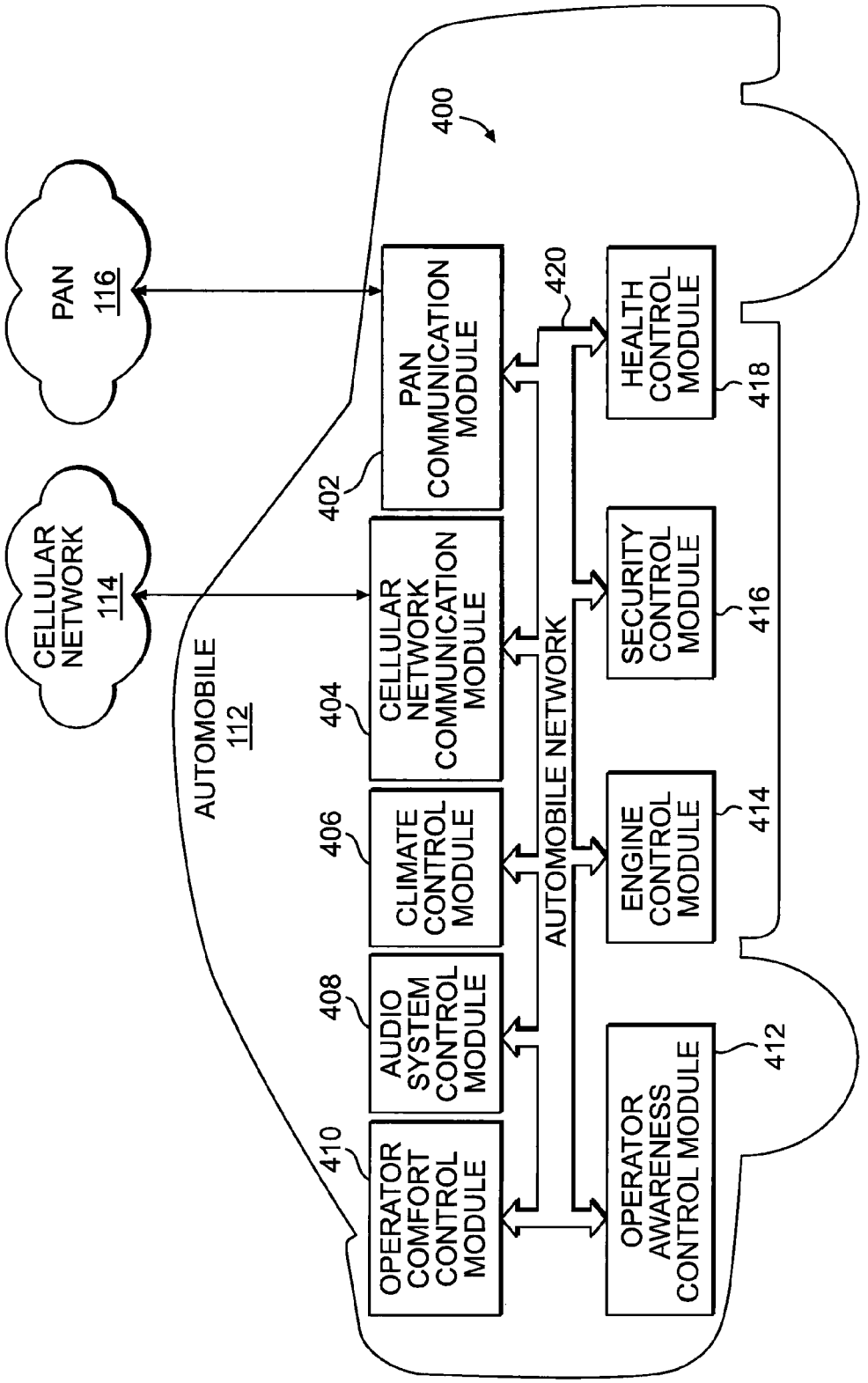
400
PAN
116
CELLULAR
NETWORK
114
AUTOMOBILE
112
PAN
COMMUNICATION
MODULE
402
CELLULAR
NETWORK
COMMUNICATION
MODULE
404
CLIMATE
CONTROL
MODULE
406
AUDIO
SYSTEM
CONTROL
MODULE
408
OPERATOR
COMFORT
CONTROL
MODULE
410
420
AUTOMOBILE NETWORK
HEALTH
CONTROL
MODULE
418
SECURITY
CONTROL
MODULE
416
ENGINE
CONTROL
MODULE
414
OPERATOR
AWARENESS
CONTROL MODULE
412

FIG. 4

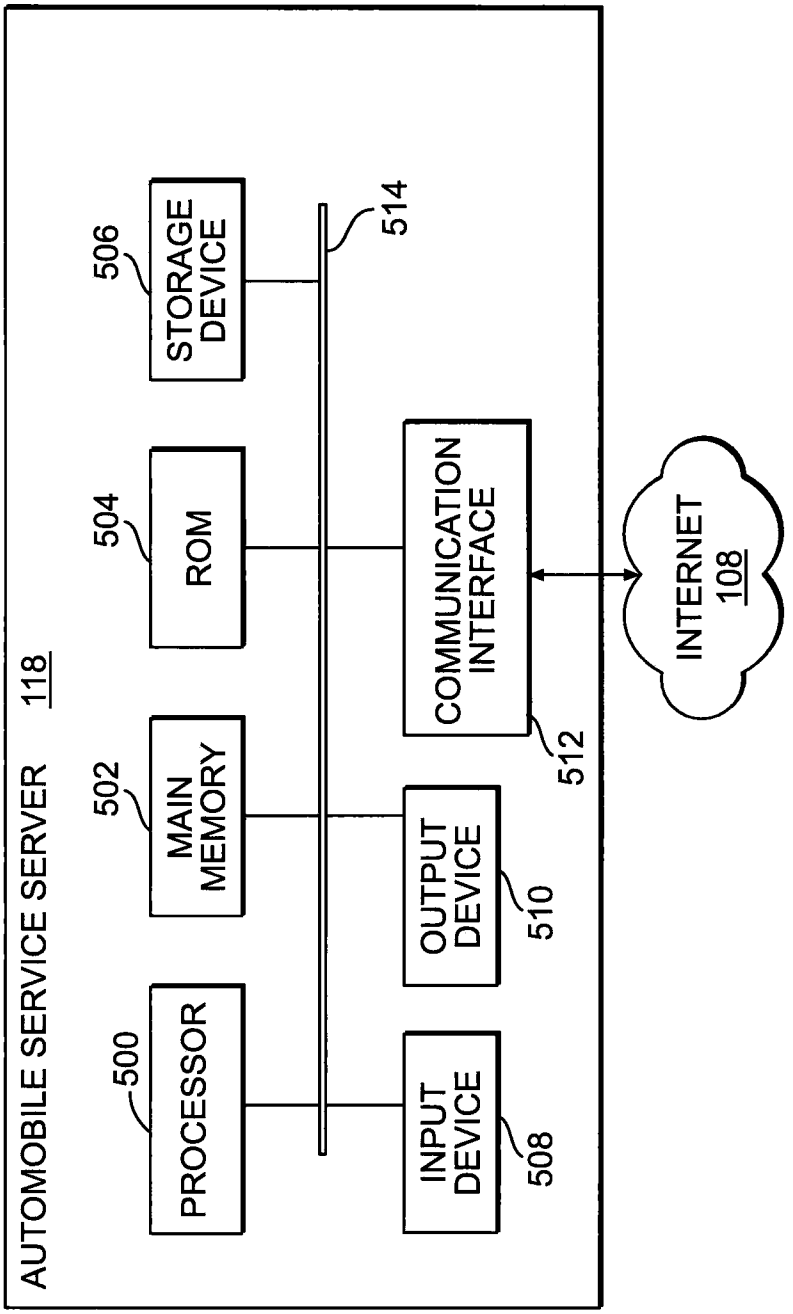
AUTOMOBILE SERVICE SERVER 118
500
PROCESSOR
502
MAIN MEMORY
504
ROM
506
STORAGE DEVICE
514
INPUT DEVICE
508
OUTPUT DEVICE
510
COMMUNICATION INTERFACE
512
INTERNET 108

FIG. 5

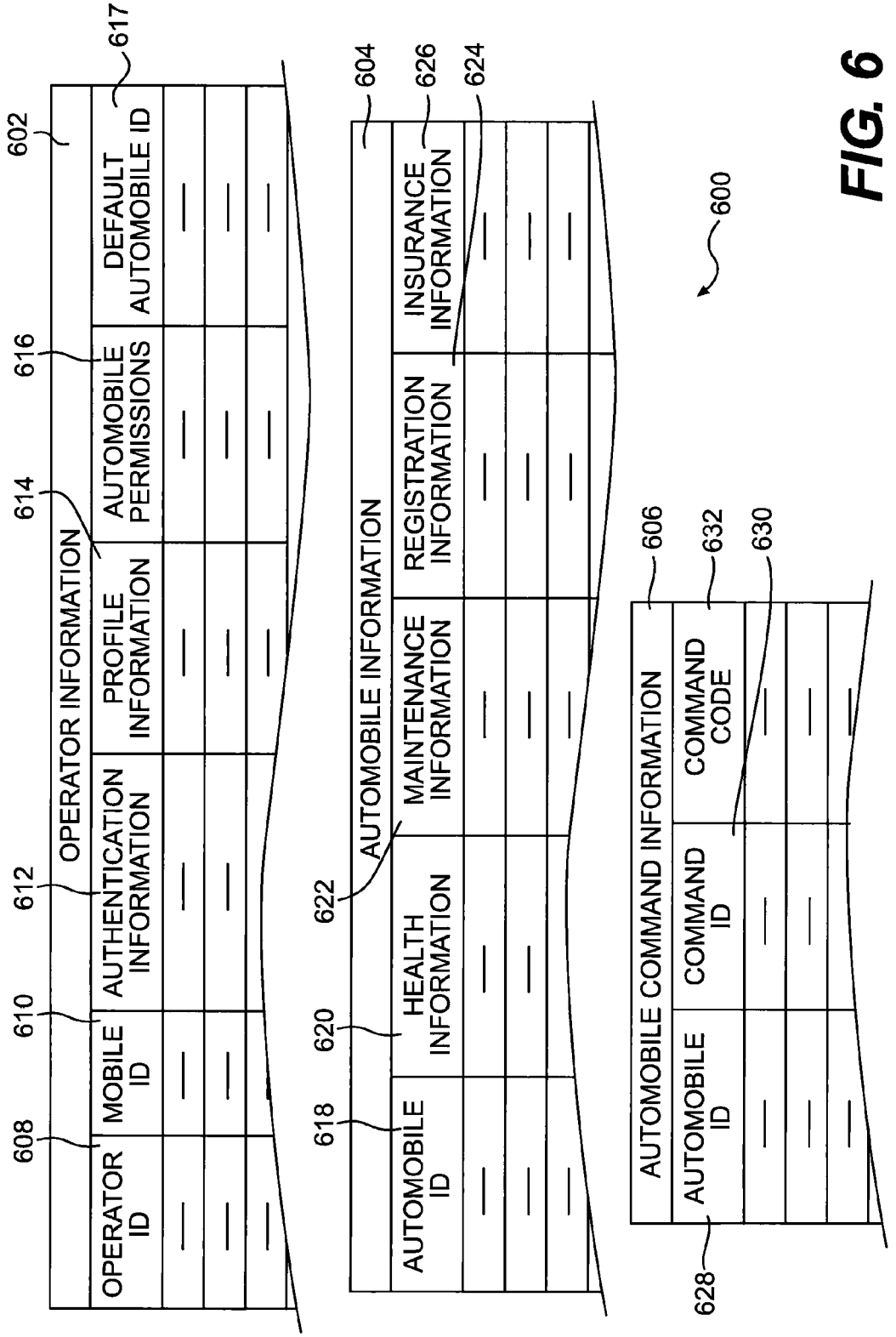
602
OPERATOR INFORMATION
608
OPERATOR ID
610
MOBILE ID
612
AUTHENTICATION INFORMATION
614
PROFILE INFORMATION
616
AUTOMOBILE PERMISSIONS
617
DEFAULT AUTOMOBILE ID
604
AUTOMOBILE INFORMATION
618
AUTOMOBILE ID
620
HEALTH INFORMATION
622
MAINTENANCE INFORMATION
624
REGISTRATION INFORMATION
626
INSURANCE INFORMATION
600
606
AUTOMOBILE COMMAND INFORMATION
628
AUTOMOBILE ID
630
COMMAND ID
632
COMMAND CODE

FIG. 6

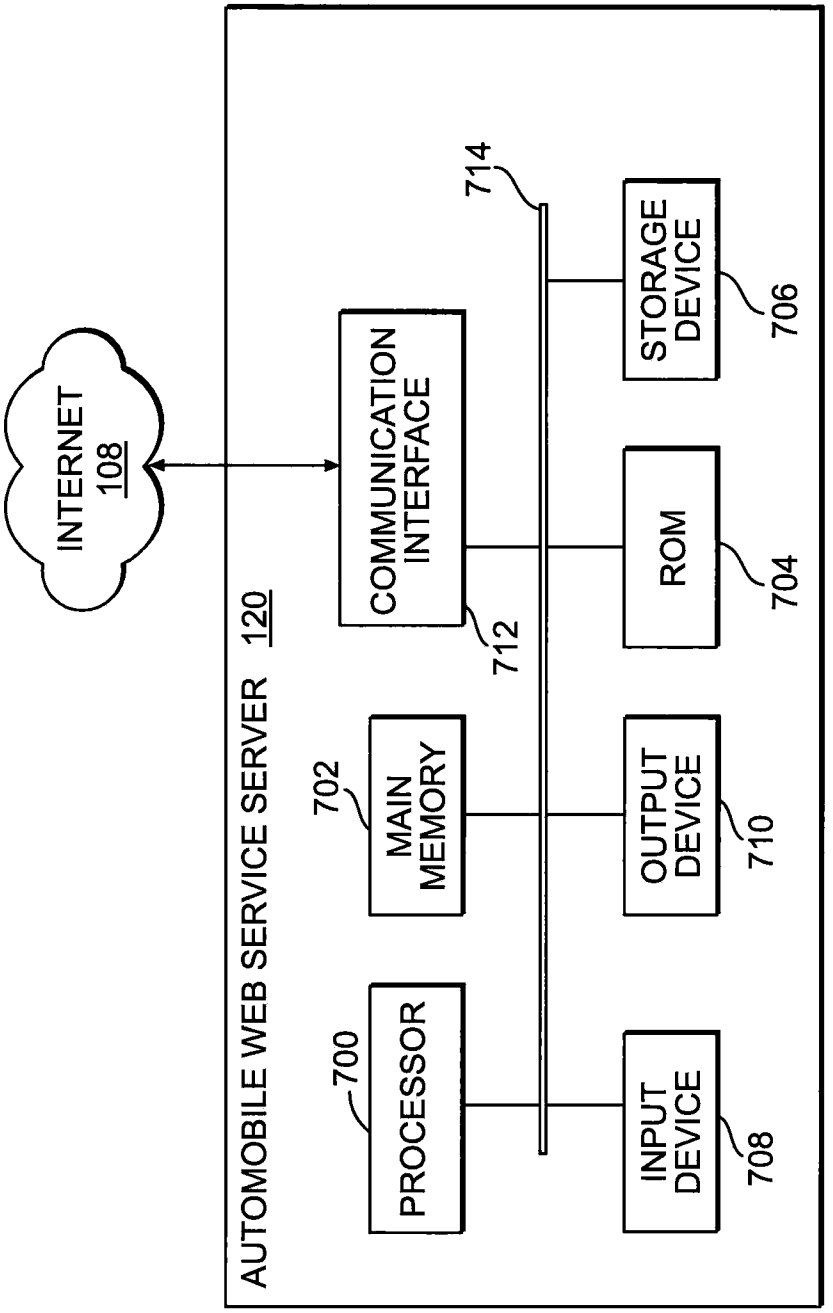
INTERNET
108
AUTOMOBILE WEB SERVICE SERVER 120
COMMUNICATION INTERFACE
712
714
STORAGE DEVICE
706
ROM
704
MAIN MEMORY
702
OUTPUT DEVICE
710
PROCESSOR
700
INPUT DEVICE
708

FIG. 7

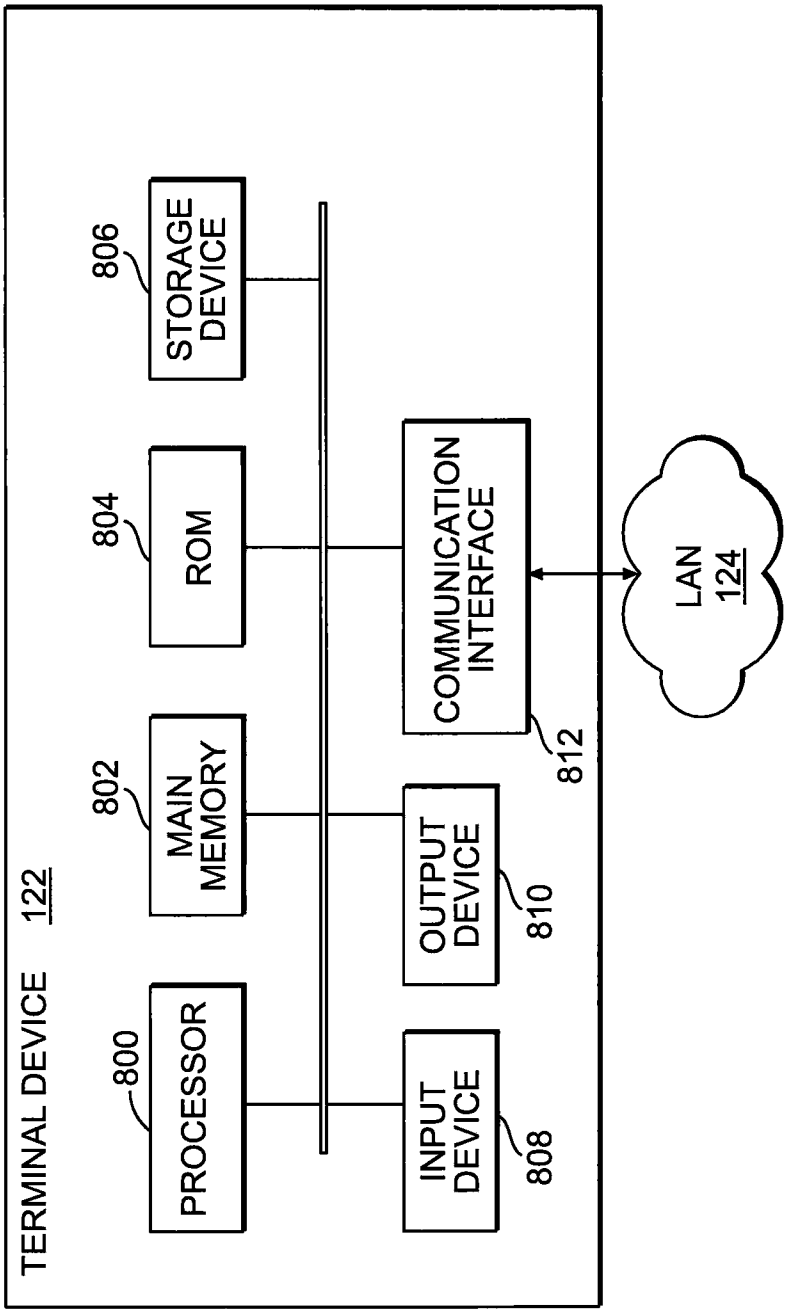
TERMINAL DEVICE 122
800
PROCESSOR
802
MAIN MEMORY
804
ROM
806
STORAGE DEVICE
INPUT DEVICE
808
OUTPUT DEVICE
810
COMMUNICATION INTERFACE
812
LAN 124

FIG. 8

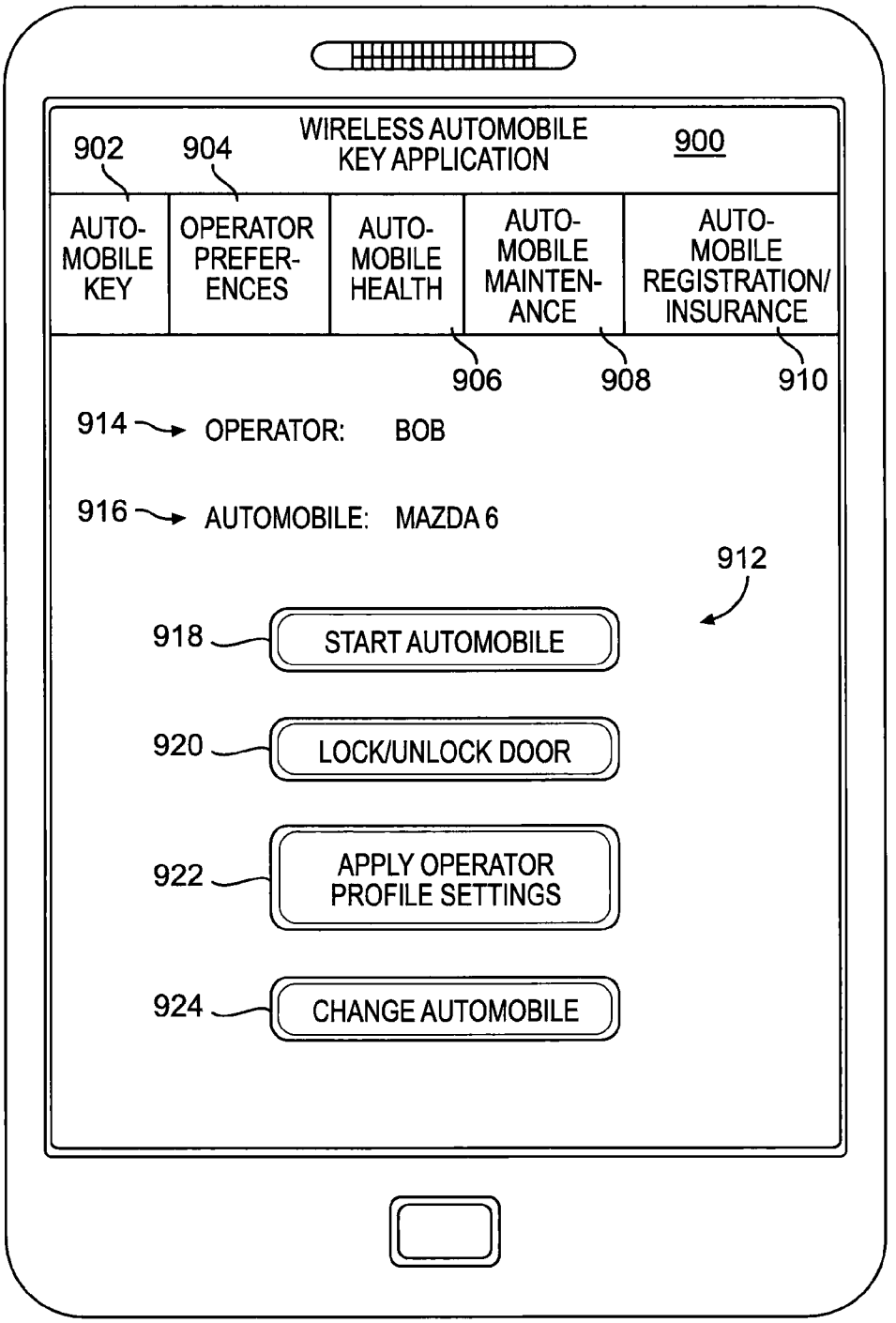
WIRELESS AUTOMOBILE KEY APPLICATION
900
902
904
AUTO-MOBILE KEY
OPERATOR PREFER-ENCES
AUTO-MOBILE HEALTH
AUTO-MOBILE MAINTEN-ANCE
AUTO-MOBILE REGISTRATION/ INSURANCE
906
908
910
914
OPERATOR: BOB
916
AUTOMOBILE: MAZDA 6
912
918
START AUTOMOBILE
920
LOCK/UNLOCK DOOR
922
APPLY OPERATOR PROFILE SETTINGS
924
CHANGE AUTOMOBILE

FIG. 9

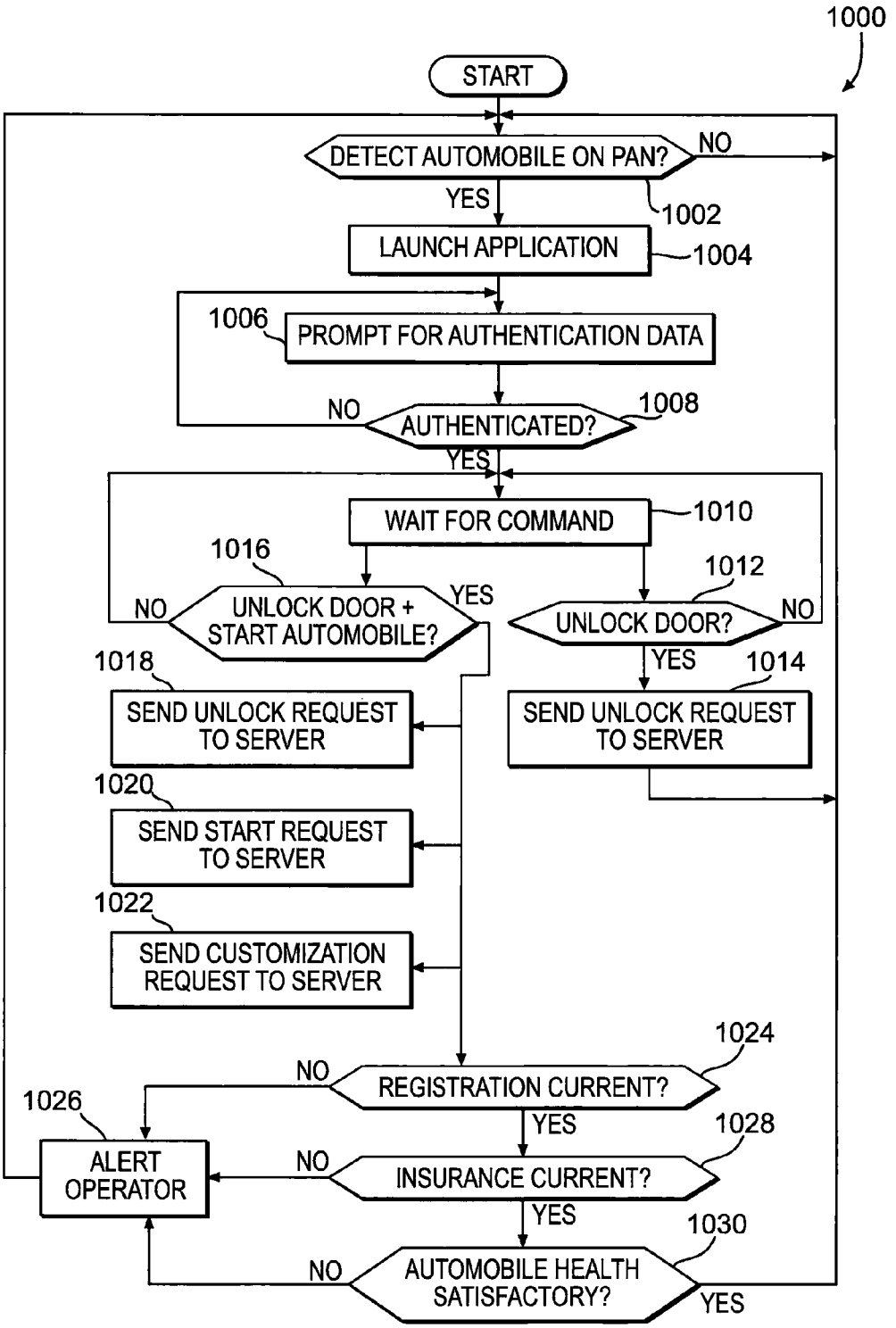
1000
START
DETECT AUTOMOBILE ON PAN?
NO
YES
1002
LAUNCH APPLICATION
1004
1006
PROMPT FOR AUTHENTICATION DATA
NO
AUTHENTICATED?
1008
YES
WAIT FOR COMMAND
1010
1016
1012
NO
UNLOCK DOOR + START AUTOMOBILE?
YES
UNLOCK DOOR?
NO
YES
1018
1014
SEND UNLOCK REQUEST TO SERVER
SEND UNLOCK REQUEST TO SERVER
1020
SEND START REQUEST TO SERVER
1022
SEND CUSTOMIZATION REQUEST TO SERVER
1024
NO
REGISTRATION CURRENT?
1026
YES
1028
ALERT OPERATOR
NO
INSURANCE CURRENT?
YES
1030
NO
AUTOMOBILE HEALTH SATISFACTORY?
YES

FIG. 10

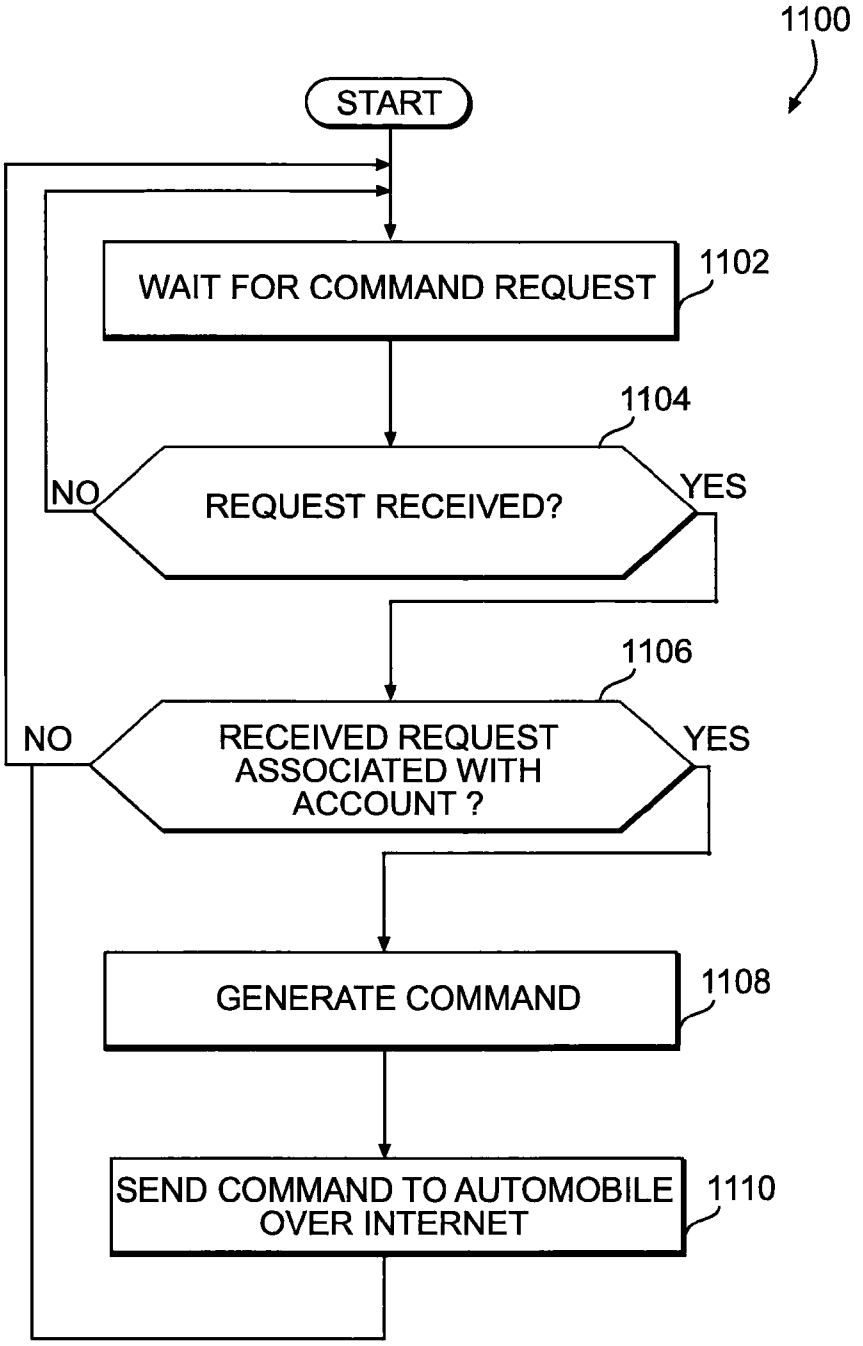
1100
START
WAIT FOR COMMAND REQUEST
1102
1104
NO
REQUEST RECEIVED?
YES
1106
NO
RECEIVED REQUEST ASSOCIATED WITH ACCOUNT ?
YES
GENERATE COMMAND
1108
SEND COMMAND TO AUTOMOBILE OVER INTERNET
1110

FIG. 11

METHODS AND SYSTEMS FOR PROVIDING A WIRELESS AUTOMOBILE KEY SERVICE

BACKGROUND INFORMATION

In a remote "keyless" entry system for an automobile, the automobile operator usually carries an electronic "key" device along with the mechanical key for the automobile. The electronic key device has several buttons allowing the operator to perform different functions traditionally requiring the mechanical key. For example, the key device usually includes a button for locking the doors, a button for unlocking the doors, and a button for opening the trunk. Some electronic key devices also include a button for starting the engine of the automobile and a button for triggering/terminating an alarm condition of an alarm system on the automobile.

When a particular button is pressed, the electronic device emits a radio wave having a specific frequency. Based on the frequency, a controller onboard the automobile is able to discern and execute a requested command. Since radio waves are used, the operator can perform the various functions at a distance from the automobile (e.g., several meters). For example, the operator can start the automobile while still inside a building or can unlock the doors while walking through a parking lot to the automobile.

While conventional keyless entry systems are useful, they have certain drawbacks. For example, since the operator usually carries the electronic key with the mechanical key, electronic keys are not convenient in terms of reducing the number of items that must be carried when taking a trip in the automobile. Further, the mechanical key is usually lost when the electronic key is lost. And replacing the electronic key or the mechanical key is time-consuming, inconvenient, and expensive. Further, conventional keyless entry systems are limited in terms of their functionality.

This disclosure is directed to overcoming one or more of the problems set forth above, as well as other problems in the art.

BRIEF DESCRIPTION OF THE DRAWINGS

FIG. **1** illustrates an exemplary wireless automobile key system, consistent with the disclosed embodiments;

FIG. **2** illustrates an exemplary mobile device associated with the wireless automobile key system, consistent with the disclosed embodiments;

FIG. **3** illustrates an exemplary a storage device of the mobile device, consistent with the disclosed embodiments;

FIG. **4** illustrates an exemplary automobile configured for use in the wireless automobile key system, consistent with the disclosed embodiments;

FIG. **5** illustrates an exemplary automobile service server of the wireless automobile key system, consistent with the disclosed embodiments;

FIG. **6** illustrates exemplary information stored by the automobile service server, consistent with the disclosed embodiments;

FIG. **7** illustrates an exemplary automobile web service server of the wireless automobile key system, consistent with the disclosed embodiments;

FIG. **8** illustrates an exemplary terminal device associated with the wireless automobile key system, consistent with the disclosed embodiments;

FIG. **9** illustrates an exemplary a page of a wireless automobile key application, or of a wireless automobile key website, consistent with the disclosed embodiments;

FIG. **10** is a flowchart illustrating an exemplary method for implementing wireless automobile key service, consistent with the disclosed embodiments; and

FIG. **11** is a flowchart illustrating an exemplary method for processing wireless automobile key commands, consistent with the disclosed embodiments.

DETAILED DESCRIPTION

Reference will now be made in detail to exemplary embodiments, examples of which are illustrated in the accompanying drawings. The following description refers to the accompanying drawings in which the same numbers in different drawings represent similar elements unless otherwise represented. The implementations set forth in the following description of exemplary embodiments do not represent all implementations consistent with the disclosure. Instead, they are merely examples of systems and methods consistent with aspects related to the disclosure as recited in the appended claims.

As used herein, automobile owner or operator means any person or other entity having a property interest, ownership interest, usage interest, possessory interest, custodial interest, or other interest in an automobile. The two terms are used interchangeably, and are merely intended to refer to any person or entity that may have a sufficient interest in the automobile to benefit from the disclosed automobile security monitoring system.

One aspect of the disclosure relates to a method for commanding an automobile using a mobile device. The method may include detecting whether the mobile device is connected to the automobile over a first network, launching a wireless automobile key service application on the mobile device when it is detected that the mobile device is connected to the automobile over the first network, and receiving, via the application from an operator of the automobile using the mobile device, a request to issue a command to the automobile. The method may also include determining whether the requested command is a first command or a second command. When the requested command is a first command, the method may include sending, from the mobile device to a server over a second network, a request to issue the first command to the automobile. And when the requested command is a second command, the method may include sending, from the mobile device to the sever over the second network, a request to issue the second command to the automobile, and receiving, at the mobile device from the server over the second network, status information associated with the automobile.

Another aspect of the disclosure relates to a method for commanding an automobile. The method may include connecting the automobile, a communication device, and a server via a network. The method may further include receiving, by the server over the network, a request from an operator of the automobile using the communication device to issue a command to the automobile. The method may also include determining whether the request is to issue a first automobile command or a second automobile command. When the request is to issue the first automobile command, the method may include sending, by the server over the network, the first automobile command to the automobile. And when the request is to issue the second automobile command, the method may include sending, by the server over the network, the second automobile command to the automobile, and sending, to the terminal device over the network, status information associated with the automobile.

Yet another aspect of the disclosure relates to an automobile system. The automobile system may include a personal

area network (PAN) communication module on the automobile and configured to connect to a mobile device over a PAN. The system may further include a cellular network communication module on the automobile. The cellular network module may be configured to connect to a server over a cellular network, and to receive, from the server over the cellular network, an automobile command associated with a system onboard the automobile. In addition, the system may include a control module associated with the system onboard the automobile and configured to execute the automobile command.

FIG. **1** illustrates an exemplary wireless automobile key system **100**, consistent with the disclosed embodiments. System **100** may be associated with an Internet service provider, a wireless service provider, a telecommunications service provider, a content service provider, or another entity that provides the disclosed wireless automobile key service. In another embodiment, system **100** may be associated with an automobile company that provides the disclosed wireless automobile key service.

In general, system **100** may provide a wireless automobile key service to one or more owners of one or more automobiles. In one embodiment, the owner or operator must have an account with system **100** to take advantage of the disclosed wireless automobile key security service. But other arrangements are contemplated. For example, the disclosed wireless automobile key service may be included as a feature of a particular automobile model, such as an upgraded security package.

System **100** enables an operator of an automobile to use the operator's mobile device, such as a cell phone, to lock/unlock the automobile, to power on/off the automobile, or to affect other automobile operations. System **100** may also communicate with the automobile, over a network, to apply automobile system settings based on preferences contained in an operator profile. In addition, system **100** may enable an operator of the automobile at a remote terminal, such as a desktop or laptop computer, to lock/unlock the automobile, to power on/off the automobile, or to perform other operations associated with the automobile over a network. System **100** may also enable the operator or owner to view health information associated with the vehicle, to view or change operator profile information for the automobile, or to perform other related functions. These and other functions of system **100** will be discussed in greater detail below.

As shown in FIG. **1**, system **100** may include a mobile system **102**, an automobile service system **104**, and a local system **106** in communication over the Internet **108**. Mobile system **102** may include one or more mobile devices **110** and one or more automobiles **112** configured to communicate on a cellular network **114**. Mobile system **102** may also include a cellular network gateway **115** configured to facilitate communications between cellular network **114** and the Internet **108**.

Mobile device **110** may be any type of mobile device configured to communicate over cellular network **114**. For example, mobile device **110** may be a smartphone, a cell phone, a personal digital assistant (PDA), or other type of mobile device equipped to communicate voice and/or data with other mobile devices **110** over cellular network **114**. Mobile device **110** may also communicate with one or more automobiles **112** over a personal area network (PAN) **116**, such as Bluetooth® piconet or other network for communicating data over a short range.

FIG. **2** illustrates an exemplary mobile device **110**, consistent with the disclosed embodiments. As shown in FIG. **2**, mobile device **110** may include, for example, a processor **202**, a main memory **204**, a read-only memory (ROM) **206**, a storage device **208**, an input device **210**, an output device **212**, a cellular network communication interface **214**, and a personal area network (PAN) communication interface **216** interconnected via a communications bus **218**.

Processor **202** may include any general-purpose or special-purpose computer microprocessor configured to execute computer program instructions stored in main memory **204**. Main memory **204** may include, for example, a random access memory (RAM) or other type of dynamic or volatile storage device. Main memory **204** may store information and instructions loaded from ROM **206** for execution by processor **202**.

ROM **206** may be any static or non-volatile memory storage device configured to store computer program instructions for loading into main memory **204** and execution by processor **202**. For example, ROM **206** may be a programmable read-only memory (PROM), such as an erasable programmable read-only memory (EPROM), an electronically erasable programmable read-only memory (EEPROM), a one-time programmable read-only memory (OTP), a field-programmable read-only memory (FPROM), or a flash memory device.

Storage device **208** may include any type of mass data storage device. For example, storage device **208** may include a magnetic data storage device, such as a hard drive. Alternatively or additionally, storage device **208** may include a solid-state drive (SSD). It is to be appreciated, however, that storage device **208** may embody any type of mass data storage device known in the art.

FIG. **3** shows an exemplary representation of information stored in storage device **208**. As shown, storage device **208** may contain a mobile operating platform **300**, a wireless automobile key service application **302**, a mobile ID **304**, and/or a PAN ID **306**. Mobile operating system **300** may be any type of operating environment for a mobile computing device within which one or more mobile applications can execute. For example, mobile operating platform **300** may be the Nokia Symbian™ operating environment, the Apple IOS™ operating environment, the RIM Blackberry™ operating environment, the Google Android™ operating environment, the Windows Mobile™ operating environment, or another graphical operating environment configured to execute on a mobile computing device.

Automobile service application **302** may be an application configured to execute on mobile operating platform **300** to perform the disclosed wireless automobile key service. In one embodiment, mobile device **110** may download application **302** from automobile service system **104**. For example, an operator of automobile **112** may register for the disclosed wireless automobile key service with automobile service system **104** and create an account for one or more mobile devices **110**, automobile operators, and/or automobiles **112**. After registering, application **302** may be downloaded to mobile device **110**.

Mobile ID **304** may include any form of identification associated with mobile device **110**. For example, mobile ID **304** may be a serial number, a network ID on cellular network **114**, an identification of an owner or account holder of mobile device **110**, or any other information used to identify mobile device **110**.

PAN ID **306** may include any information used to identify mobile device **110** on PAN **116**. For example, PAN ID **306** may be a Bluetooth device ID, a Bluetooth link key, or any other information used to identify mobile device **110** on PAN **116**.

Returning to FIG. **2**, input device **210** may include one or more mechanisms that permit a user to input information or commands to mobile device **110**. For example, input device **210** may include a keyboard, a touch screen, a touch pad, a mouse, a pen, a voice recognition device, a biometric recognition device, a still camera, a video camera, an accelerometer, a microphone, or any other type of device for enabling user input to a computing device.

Output device **212** may include one or more mechanisms that output information to the user of mobile device **110**. For example, output device **212** may include a display device, a speaker, a vibrating device, a lighting device or lamp, or any other type of device for providing output to a user of a computing device.

Cellular communication interface **214** may include any device or system enabling mobile device **110** to communicate over cellular network **114**. For example, cellular communication interface **214** may include a radio antenna and/or transceiver for communicating voice and/or data over a 2nd Generation (2G) cellular communication network, a 3rd Generation (3G) cellular communication network, a 3rd Generation Long Term Evolution (LTE) network, a 4th Generation (4G) cellular communication network, or any other type of mobile wireless communication network **114** known in the art. In general, mobile device **110** may communicate with automobile service system **104**, via cellular communication interface **214**, in connection with the disclosed automobile services and/or functions.

PAN communication interface **216** may include any device or system enabling mobile device **110** to communicate over PAN **116**. In one embodiment, PAN communication interface **216** may include a radio antenna and/or transceiver for communicating voice and/or data over short distances, such as 1-100 meters. For example, PAN communication interface **216** may be a Bluetooth® communication interface configured to communicate over short distances using low-energy, short wavelength radio waves (e.g., 2.4 GHz). PAN communication interface **216** may be configured to detect the presence of automobile **112** on PAN **116**, to established a connection (e.g., "pair") with automobile **112** over PAN **116**, and to communicate with automobile **112** over the PAN connection, consistent with the disclosed wireless automobile key service.

FIG. **4** illustrates an exemplary representation of an onboard automobile system **400**, consistent with disclosed embodiments. As shown, in one embodiment, system **400** may include a personal area network (PAN) communication module **402**, a cellular network communication module **404**, a climate system control module **406**, a radio system control module **408**, an operator comfort system control module **410**, an operator awareness system control module **412**, an engine system control module **414**, a security system control module **416**, and a health system control module **418**, interconnected by an automobile network **420**. Automobile network **420** may be, for example, a controller area network (CAN) bus, an Ethernet network, or any other type of onboard automobile communication network known in the art.

In one embodiment, modules **402-418** may embody one or more computers onboard automobile **112** and configured to perform or control various automotive functions. For example, modules **402-408** may include electronic control units (ECU), such as application-specific integrated circuits (ASIC), field-programmable gate arrays (FPGA), or other types of computer processing devices known in the art. In other embodiments, however, modules **402-418** may be software modules of a computer program executing on an automobile computer.

PAN communication module **402** may be configured to control one or more communication devices of automobile **112** to communicate with mobile device **110** over PAN **116**. For example, PAN communication module **402** may leverage a radio antenna and/or transceiver to communicate with mobile device **110** using Bluetooth protocol or another communications protocol for communicating data over short distances using low-energy, short-wavelength radio waves.

In one embodiment, PAN communication module **402** may be configured to connect to mobile device **110** over PAN **116**. For example, PAN communication module **402** may be configured to detect the presence of mobile device **110** on PAN **116**, to established a connection (e.g., "pair") with mobile device **110** over PAN **116**, and to communicate with mobile device **110** over the PAN connection. For example, the owner of automobile **112** may pair PAN communication module **402** with the owner's mobile device **110** (e.g., according to Bluetooth protocol). Subsequently, PAN communication module **402** may periodically broadcast over PAN network **116** a beacon signal, which may be detected by mobile device **110**. Alternatively, mobile device **110** may periodically broadcast a beacon signal on PAN **116**, which may be detected by PAN communication module **402**. In response to detecting the beacon, a communications session may be established between PAN communication module **402** and mobile device **110**.

In certain embodiments, PAN communication module **402** may be configured to receive an automobile command from mobile device **110** over PAN **116** in connection with the disclosed wireless automobile key service. PAN communication module **402** may broadcast the command on automobile network **420** for execution by one or more of modules **406-418**. For example, PAN communication module **402** may receive an engine start command from mobile device **100** over PAN **116**. In response, PAN communication module **402** may generate and transmit an engine start command to engine control module **414** over automobile network **420**. As another example, PAN communication module **402** may receive from mobile device **110** over PAN **116** an audio system settings command, an operator seat settings command, an operator mirror or camera settings command, or a door or trunk lock/unlock command. In response, PAN communication module **402** may generate and transmit corresponding commands over automobile network **402** to climate system control module **406**, to audio system control module **408**, to operator comfort system control module **410**, to operator awareness system control module **414**, and to security system control module **416**, respectively.

In addition, PAN communication module **402** may be configured to receive a request for automobile health data from mobile device **110** over PAN **116**. For example, PAN communication module **402** may receive a request for an automobile health report. In response, PAN communication module **402** may retrieve or request from health control module **418** over automobile network **420** automobile health information, such as battery charge level, fuel level, tire pressure, fluid levels (e.g., oil, transmission fluid, and power steering fluid), diagnostic alerts (e.g., low oil pressure), or any other automobile health or status information monitored by health control module **418** and/or broadcast on automobile network **420**. PAN communication module **402** may generate a report based on the received health information, and may transmit the report over PAN network **116** to mobile device **110**.

Cellular communication module **404** may be configured to control one or more communication devices of automobile **112** to communicate with over cellular network **114**, in connection with the disclosed wireless automobile key service.

For example, cellular communication module **404** may include a radio antenna and/or transceiver for communicating data over a 2nd Generation (2G) cellular communication network, a 3rd Generation (3G) cellular communication network, a 3rd Generation Long Term Evolution (LTE) network, a 4th Generation (4G) cellular communication network, or any other type of cellular communication network **114** known in the art.

Cellular network communication module **404** may be configured to receive automobile commands from automobile service system **104**. And, in response, cellular network communication module **404** may broadcast the automobile command on automobile network **420** for execution by one or more of modules **406-418**. For example, cellular network communication module **404** may receive an engine power on/off command from automobile service system **104** over cellular network **114**, in response to operator input to mobile device **110** and/or to a terminal device associated with local system **106**. Cellular network communication module **404** may the generate and transmit an engine start command to engine system control module **414** over automobile network **420**. Similarly, in response to operator input to mobile device **110** and/or to a terminal device associated with local system **106**, cellular communication module **404** may receive from automobile service system **104** over cellular network **114** an audio systems settings command, an operator seat settings command, an operator mirror or camera settings command, or a door or trunk lock/unlock command. In response, cellular network communication module **404** may generate and transmit corresponding commands over automobile network **402** to climate system control module **406**, to audio system control module **408**, to operator comfort system control module **410**, to operator awareness system control module **414**, and to security system control module **416**, respectively.

In addition, cellular network communication module **404** may be configured to receive a request for automobile health data from automobile service system **104**. For example, in response to an owner of automobile **112** providing input to mobile device **110** and/or to a terminal device of local system **106**, cellular communication module **404** may receive a request for an automobile health report from automobile service system **104**. In response, cellular network communication module **404** may retrieve or request from health control module **418** over automobile network **420** automobile health information, such as battery charge level, fuel level, tire pressure, fluid levels (e.g., oil, transmission fluid, and power steering fluid), diagnostic alerts (e.g., low oil pressure), or any other automobile health or status information monitored by health control module **418** and/or broadcast on automobile network **420**. Cellular network communication module **404** may then generate a report based on the received health information, and may transmit the report over cellular network **114** to automobile service system **104**, to mobile device **110**, and/or to the terminal device associated with local system **106**.

Climate control module **406** may be configured to control one or more climate systems of automobile **112**. For example, climate control module **406** may be configured to control a heating system, an air conditioning system, a defrosting system, or any other climate system of automobile **112**.

Consistent with the disclosed embodiments, climate system control module **406** may control the climate systems based on automobile commands received from PAN communication module **402** and/or from cellular network communication module **404**. For example, as described above, PAN communication module **402** or cellular network communication module **404** may transmit climate control commands on automobile network **420** in response to receiving commands over cellular network **114** or over PAN **116** from mobile device **110**, from automobile service system **104**, or from a terminal device associated with local system **106**. The climate control commands may include, for example, a command to set desired heating temperature, a desired cooling temperature, a desired air conditioning setting, a desired vent setting, a desired fan speed setting, a desired window or mirror defroster setting, and/or other desired automobile climate settings associated with an operator profile. Upon receiving a command, climate system control module **406** may control the onboard climate systems to achieve the commanded settings.

Audio system control module **408** may be configured to control an audio system of automobile **112**. For example, audio system control module **408** may be configured to control a radio, a CD player, a DVD player, an amplifier, a receiver, or any other audio device of automobile **112**. Consistent with the disclosed embodiments, audio system control module **408** may control the audio system in response to commands received from PAN communication module **402** and/or from cellular network communication module **404**. For example, as described above, PAN communication module **402** or cellular network communication module **404** may transmit audio system control commands on automobile network **420** in response to receiving commands over cellular network **114** or over PAN **116** from mobile device **110**, from automobile service system **104**, or from a terminal device associated with local system **106**. Exemplary audio system control commands include a command to set desired station presets (e.g., AM, FM, or satellite station presets), to set a desired input source (e.g., AM radio, FM radio, satellite radio, CD player, or auxiliary input), to set a desired volume, to set a desired radio station or track, to set desired audio equalizer settings (e.g., bass, midrange, treble), to set a desired audio profile (e.g., surround sound, concert, live, rock, jazz, etc.), or to set any other parameter associated with the audio system of automobile **112**. In one embodiment, the audio system setting commands may be based on an operator profile. Upon receiving a command, audio system control module **408** may control the audio system to achieve the commanded settings.

Operator comfort control module **410** may be configured to control an operator comfort system of automobile **112**. For example, operator comfort control module **410** may control a seat positioning system, a seat heating system, a seat cooling or ventilation system, a grip heating system, or any other operator or passenger comfort devices associated with automobile **112**. Consistent with the disclosed embodiments, operator comfort system control module **410** may control the comfort system in response to commands received from PAN communication module **402** and/or from cellular network communication module **404**. For example, as described above, PAN communication module **402** or cellular network communication module **404** may transmit comfort system control commands on automobile network **420** in response to receiving commands over cellular network **114** or over PAN **116** from mobile device **110**, from automobile service system **104**, or from a terminal device associated with local system **106**. Exemplary comfort system control commands include a command to set a desired seat backrest angle, to set a desired seat cushion angle, to set a desired seat fore-and-aft position, to set a desired headrest angle, to set a desired headrest height, to set a desired lumbar position, to set a desired seat depth/height, to set a desired seat heating/cooling temperature, to set a desired set ventilation parameter, or to set a desired grip temperature. In one embodiment, the comfort setting commands may be based on an operator profile. Upon receiving a

command, operator comfort system control module **410** may control the comfort system to achieve the commanded settings.

Operator awareness system control module **412** may be configured to control parameters of one or more operator awareness devices of automobile **112**. For example, operator awareness system control module **412** may control a mirror positioning device, camera positioning device, or any other operator awareness device associated with automobile **112**. Consistent with the disclosed embodiments, operator awareness system control module **412** may control the parameters of the awareness devices in response to commands received from PAN communication module **402** and/or from cellular network communication module **404**. For example, as described above, PAN communication module **402** or cellular network communication module **404** may transmit awareness system control commands on automobile network **420** in response to receiving commands over cellular network **114** or over PAN **116** from mobile device **110**, from automobile service system **104**, or from a terminal device associated with local system **106**. Exemplary operator awareness system control commands include a command to set a rearview mirror position, to a side mirror position, or to set a reverse camera position. In one embodiment, the operator awareness command settings may be based on an operator profile. Upon receiving a command, operator awareness system control module **412** may control the comfort system to achieve the commanded settings.

Engine system control module **414** may be configured to control one or more parameters of an engine or other power source associated with automobile **112**. In one embodiment, engine system control module **414** may be configured to power on/off the engine or other power source of automobile **112** in response to commands received from PAN communication module **402** and/or from cellular network communication module **404**. For example, as described above, PAN communication module **402** or cellular network communication module **404** may transmit an engine power on/off command on automobile network **420** in response to receiving a command over cellular network **114** or over PAN **116** from mobile device **110**, from automobile service system **104**, or from a terminal device associated with local system **106**. Upon receiving a command, engine system control module **414** may control the engine or other power source of automobile **112** to achieve the commanded setting.

Security system control module **416** may be configured to control one or more security devices associated with automobile **112**. In one embodiment, security system control module **416** may be configured to set or unset an alarm system or alarm condition of automobile **112**, or to lock/unlock a door or trunk of automobile **112**, in response to commands received from PAN communication module **402** and/or from cellular network communication module **404**. For example, as described above, PAN communication module **402** or cellular network communication module **404** may transmit a command to lock/unlock the doors on automobile network **420** in response to receiving commands over cellular network **114** or over PAN **116** from mobile device **110**, from automobile service system **104**, or from a terminal device associated with local system **106**. In other embodiments, PAN communication module **402** or cellular network communication module **404** may similarly transmit commands to enable or disable an alarm state of an alarm system of automobile **112**. Upon receiving a command, security system control module **416** may control the security device of automobile **112** to achieve the commanded setting.

Health control module **418** may be configured to monitor the health or status systems of automobile **112**. For example, health control module **418** may monitor fluid levels, such as oil level, fuel level, power steering fluid level, transmission fluid level, windshield wiper fluid level, and water or coolant level. Health control module **418** may also monitor temperatures and pressures associated with automobile **112**, such as oil temperature, oil pressure, tire pressure, engine temperature, and coolant temperature. Health control module **418** may also monitor a charge level of a battery. Health control module **418** may also monitor any diagnostic alerts or faults associated with automobile **112**, such as check engine conditions, low oil pressure conditions, or low fuel conditions.

In some embodiments, health control module **418** may compile the monitored automobile health information to generate an automobile health log, which may be stored in an associated memory. Health control module **418** may also transmit the report on automobile network **420** in response to a request received from PAN communication module **402** or from cellular network communication module **404**. As described above, PAN communication module **402** or cellular network communication module **404** may transmit a request for an automobile health report on automobile network **420** in response to receiving a command over cellular network **114** or over PAN **116** from mobile device **110**, from automobile service system **104**, or from a terminal device associated with local system **106**. Accordingly, upon receiving a command, health system control module **418** may provide an automobile health report to PAN communication module **402** and/or to cellular network communication module **404**.

Returning to FIG. **1**, cellular network **114** may include any combination of components or systems for wirelessly communicating data. For example, cellular network **114** may include one or more base station antennas, switches, routers, amplifiers, repeaters, subscriber nodes, and/or other network communication devices. In one embodiment, cellular network **114** may be a 4th Generation (4G) cellular network. In other embodiments, cellular network **114** may be a 2nd Generation (2G) cellular communication network, a 3rd Generation (3G) cellular communication network, a 3rd Generation Long Term Evolution (LTE) network, or any other type of cellular communication network **114** known in the art. Cellular network **114** may also communicate voice or data using Internet Protocol (IP) or other packet-switched protocols.

Cellular network gateway **115** may include any device capable of acting as an interlace between cellular network **114** and the Internet **108**. Cellular network gateway **115** may convert messages having cellular network protocols into messages having IP-compatible protocols or other packet-switched protocols. Cellular network gateway **115** may further implement protocols such as session initiation protocol (SIP) when making data available to the Internet **108**. In one embodiment, cellular network gateway **115** may receive automobile commands from the Internet **108**, convert the commands for communication on cellular network **114**, and transmit the converted automobile commands on cellular network **114**. The converted commands may then be received at automobile **112** from cellular network **114** via cellular network communication interface **214**. Alternatively or additionally, the converted commands may be received at mobile device **110** and relayed from mobile device **110** to automobile **112** over PAN **116**. Similarly, cellular network gateway **115** may receive data transmitted on cellular network **114**, convert the data for communication on the Internet **108**, and transmit the converted data on the Internet **108**.

PAN **116** may be any wireless network configured to communicate data over a short distance, such as within a personal

space or area. In one embodiment, PAN **116** may be a Bluetooth piconet configured to communicate data over short distances using radio waves having short wavelengths. It is to be appreciated however, PAN **116** may embody any type of wireless network for communicating data over short distances (e.g., an infrared signaling network).

Automobile service system **104** may represent computing infrastructure associated with an Internet service provider, a wireless service provider, a telecommunications service provider, a content service provider, or other entity that provides the disclosed wireless automobile key service. In one embodiment, automobile service system **104** may include an automobile service server **118** and an automobile web service server **120**.

Server **118** may embody a server computer, a network of server computers (e.g., distributed grid computers), a mainframe computer, or any other computing system for storing data and responding to requests for stored data over a network. Generally, server **118** may maintain automobile account information associated with customers of the disclosed wireless automobile key service. In response to requests received from automobile operators at mobile devices **110** and/or at terminal devices associated with local system **106**, server **118** may provide various automobile commands or provide various automobile-related information.

FIG. **5** illustrates an exemplary representation of automobile service server **118**. As shown, server **118** may include, for example, a processor **500**, a main memory **502**, a read-only memory (ROM) **504**, a storage device **506**, an input device **508**, an output device **510**, and a communication interlace **512** interconnected via a communications bus **514**.

Processor **500** may include any general-purpose or special-purpose computer microprocessor configured to execute computer program instructions stored in main memory **502**. Main memory **502** may include, for example, a random access memory (RAM) or other type of dynamic or volatile memory storage device. Main memory **502** may store information and instructions loaded from ROM **504** for execution by processor **500** to perform the disclosed processes.

ROM **504** may be any static or non-volatile memory storage device configured to store computer program instructions to be loaded into main memory **502** and executed by processor **500** to perform the disclosed processes. For example, ROM **504** may be a programmable read-only memory (PROM), such as an erasable programmable read-only memory (EPROM), an electronically erasable programmable read-only memory (EEPROM), a one-time programmable read-only memory (OTP), a field-programmable read-only memory (FPROM), or a flash memory device.

Storage device **506** may include any type of mass data storage device. For example, storage device **506** may include a magnetic data storage device, such as a hard drive. Alternatively or additionally, storage device **506** may include a solid-state drive (SSD). In other embodiments, storage device **506** may include a optical storage drive, such as a CD-ROM or DVD-ROM. It is to be appreciated, however, that storage device **506** may embody any type of mass data storage device known in the art.

FIG. **6** shows an exemplary representation of wireless automobile key service information **600** stored in storage device **506**. In one embodiment, wireless automobile key service information **600** may include operator information **602**, automobile information **604**, and/or other account information. As discussed above, an owner or operator of automobile **102** may register for the disclosed wireless automobile key service by creating an account with automobile service system **104**. Although FIG. **6** may show wireless automobile key service information **600** for one account, it is to be appreciated that storage device **506** may contain automobile key service information **600** for a plurality accounts, each associated with one or more automobiles **112**, one or more automobile operators, and/or one or more mobile devices **110**.

Operator information **602** may contain information about each automobile operator on the wireless automobile key service account. For example, operator information **602** may contain an operator ID **608**, a mobile ID **610**, operator authentication information **612**, operator profile information **614**, automobile permissions information **616**, and a default automobile ID **617**. Operator ID **608** may include the name of the operator, the operator's user name for the account, a social security number of the operator, or any other information identifying the operator.

Mobile ID **610** may be associated with each operator on the wireless automobile key service account. Mobile ID **610** may be a serial number associated with the mobile device **110** of the operator, a network ID associated with mobile device **110** of the operator, or any other information that identifies the particular mobile device **110** associated with the operator.

Authentication information **612** may be associated with each operator on the wireless automobile key service account. Authentication information **612** may include an account password, biometric data, or other information that can be used to authenticate the operator to the wireless automobile key service account.

Operator profile information **614** may be associated with each operator on the wireless automobile key service account. Operator profile information **614** may contain information regarding the preferences of the operator for the disclosed wireless automobile key service. For example, operator profile information **614** may contain climate control system preferences for the operator for each automobile **112** on the account. As an example, the climate control preferences may include the operator's desired heating or cooling temperature settings, desired air conditioning settings, desired vent settings, desired fan speed settings, desired window or mirror defroster settings, and/or other climate preferences for the automobile(s) **112**.

Operator profile information **614** may also contain audio system preferences for the operator for each automobile **112** on the account. The audio system preferences may include, for example, the operator's desired station presets (e.g., AM, FM, or satellite station presets), desired input source (e.g., AM radio, FM radio, satellite radio, CD player, or auxiliary input), desired volume, desired radio station or track, desired audio equalizer settings (e.g., bass, midrange, treble), desired audio profile (e.g., surround sound, concert, live, rock, jazz, etc.), or other audio system preferences for the automobile(s) **112**.

Operator profile information **614** may also contain operator comfort system preferences for the operator for each automobile **112** on the account. The comfort preferences may include, for example, the operator's desired seat backrest angle, desired seat cushion angle, desired seat fore-and-aft position, desired headrest angle, desired headrest height, desired lumbar position, a desired seat depth/height, desired seat heating/cooling temperature, desired seat air circulation setting, desired grip temperature, or other comfort preferences for the automobile(s) **112**.

Operator profile information **614** may also contain operator awareness system preferences for the operator for each automobile **112** on the account. The operator awareness preferences may include, for example, the operator's desired rearview mirror positioning, desired side view mirror posi-

tioning, desired reverse camera positioning, or other awareness preferences for the automobile(s) **112**.

Operator profile information **614** may also contain engine system preferences for the operator for each automobile **112** on the account. The engine system preferences may include, for example, information indicating whether the operator prefers to automatically wirelessly start the engine of the automobile **112** using the disclosed wireless automobile key service.

Operator profile information **614** may also contain security system preferences for the operator for each automobile **112** on the account. The security system preferences may indicate, for example, whether the operator prefers to automatically wirelessly unlock one or more doors or the trunk of the automobile **112** using the disclosed wireless automobile key service.

Operator profile information **614** may be set by the operator using the automobile service application **302** on mobile device **110**. For example, application **302** may provide a page allowing the operator to set, configure, or modify the operator's profile information **614** using mobile device **110**. Alternatively or additionally, operator profile information **614** may be set by the operator at a terminal device associated with local system **106**. For example, the operator may access a web page provided by automobile web service server **120** allowing the operator to set, configure, or modify the operator's profile information **614**.

Operator information **602** may further include automobile permissions **616** associated with each operator on the account. In one embodiment, automobile permissions **616** may identify the automobile(s) **112** the operator is permitted to operate in connection with the disclosed wireless automobile key service. For example, in a family account, the father and mother may have permission to operate every automobile **112** on the account. Whereas a child may only have permission to operate the child's automobile **112** or the family automobile **112**.

Operator information **602** may further include a default automobile ID **617** associated with each operator on the account. Default automobile ID **617** may identify, for each operator, a default automobile **112** for which to provide the disclosed wireless automobile key service. In other words, default automobile ID **617** may identify an automobile **112** assigned to the operator for purposes of providing the disclosed wireless automobile key service. Default automobile ID **617** may include a vehicle identification number (VIN) associated with the default automobile **112**, information regarding the manufacturer, the year of manufacture, and the model of the default automobile **112**, and/or any other information that may be used to identify the default automobile **112** for which to provide the disclosed service for the operator.

Automobile information **604** may contain information about each automobile **112** on the wireless automobile key service account. For example, automobile information may contain an automobile ID **618**. Automobile ID **618** may include a vehicle identification number (VIN) associated with the automobile **112**, information regarding the manufacturer, the year of manufacture, and the model of the automobile **112**, and/or any other information that may be used to identify the automobile **112**.

In some embodiments, the operator may set operator profile information **614** from automobile **112**. For example, the operator may set the automobile climate, audio system settings, seat positioning, mirror and/or camera positioning, etc. Automobile **112** may communicate the settings over cellular network **114** to server **118**, which may update the stored operator profile information **614** for the operator.

Automobile information **604** may also contain health information **620** associated with each automobile **112** on the wireless automobile key service account. Health information **620** may contain, for example, information indicating the current fuel level, battery charge level, tire pressure, fluid levels (e.g., oil, transmission fluid, and power steering fluid), diagnostic alerts (e.g., low oil pressure), or any other monitored health or status information associated with the automobile **112**.

In one embodiment, server **118** may periodically request an automobile health report from automobiles **112** over the Internet **108**. In response to receiving the request at the automobile **112** over cellular network **114**, cellular network communication module **404** may request an automobile health report from health control module **418**. Upon receiving the health report, cellular network communication module **404** may transmit the health report to server **118** over cellular network **114**. Server **118** may use the received health report to update the health information **620** corresponding to the automobile **112**.

Automobile information **604** may further include maintenance information **622** associated with each automobile **112** on the wireless automobile key service account. Maintenance information **622** may contain information regarding the prior maintenance history of the automobile **112**. For example, maintenance information **622** may identify past maintenance performed on the automobile **112** and the time/date on which the maintenance was performed (e.g., oil change, Dec. 6, 2010). In some embodiments, maintenance information **622** may also include a schedule of required or recommendation maintenance for the automobile **112**. Maintenance information **622** may be input by the operator via mobile device **110** or via a terminal device of local system **106** (e.g., using the website). In other embodiments, automobile service server **118** may download or receive maintenance information **622** over the Internet **108**, for example, from a computing system associated with a shop that performed the maintenance.

Automobile information **604** may further include registration information **624** associated with each automobile **112** on the wireless automobile key service account. Registration information **624** may contain information regarding the registration of the automobile **112** in a state or other jurisdiction. For example, registration information **624** may contain information identifying the state in which the automobile **112** is registered, as well as the valid start date and expiration date of the registration. Registration information **624** may be input by the operator via mobile device **110** or via a terminal device of local system **106** (e.g., using the website). In other embodiments, automobile service server **118** may download or receive registration information **624** over the Internet **108**, for example, from a computing system associated with the department of motor vehicles in the jurisdiction in which the automobile **112** is registered.

Automobile information **604** may further include insurance information **626** associated with each automobile **112** on the wireless automobile key service account. Insurance information **626** may contain information regarding the insurance policy of the automobile **112**. For example, insurance information **626** may contain information identifying the insurer of the automobile **112**, as well as the valid start date and expiration date of the insurance. Insurance information **626** may be input by the operator via mobile device **110** or via a terminal device of local system **106** (e.g., using the website). In other embodiments, automobile service server **118** may download or receive insurance information **626** over the

Internet **108**, for example, from a computing system associated with the insurer of the automobile **112**.

Automobile command information **606** may be a library of commands that may be issued to automobiles **112** associated with a wireless automobile key service account. As mentioned above, server **118** may issue various commands to an automobile **112** over the Internet **108**. The commands may be issued in response to input from an operator at mobile device **110** or at a terminal device associated with local system **106**. Automobile command information **606** may store information regarding such commands for access and retrieval by server **118**. For example, automobile command information **606** may include climate control commands (e.g., power on/off commands, temperature setting commands, fan setting commands, vent setting commands, etc.); audio system commands (e.g., power on/off commands, volume setting commands, radio setting commands, audio profile setting commands, station preset assignment commands, etc.); operator comfort system commands (e.g., seat positioning commands, seat heating/cooling commands, grip heating commands, etc.); operator awareness system commands (e.g., rearview mirror positioning commands, side mirror positioning commands, reverse camera positioning commands, etc.); engine system commands (e.g., engine power on/off commands); security system commands (e.g., door or trunk lock/unlock commands; alarm system activation/deactivation commands, etc.); and/or other types of commands for a variety of types automobiles **112** made by different manufacturers.

In one embodiment, command information **606** may include an automobile ID **628** associated with the automobile **112**. Automobile ID **628** may include a vehicle identification number (VIN) associated with the automobile **112**; information regarding the manufacturer, the year of manufacture, and the model of the automobile **112**; and/or any other information that may be used to identify the automobile **112**.

Command information **606** may further include a command ID **630** for each command that may be issued to the automobile **112**. Command ID **630** may be a name of the command, a reference number associated with the command, or other information that may be used to identify a particular automobile command.

Command information **606** may further include a command code **632** associated with each command that may be issued to the automobile **112**. In one embodiment, command code **632** may be a specific code or instruction that may be broadcast on automobile network **420** and executed by a module **402-418** aboard the automobile **112** to cause the module **402-418** to perform the desired function. For example, command codes **632** may be CAN bus codes or other codes provided by the manufacturer of automobile **112** and/or the manufacturer of the automobile systems for controlling the systems to perform various functions. In one embodiment, server **118** may look up a particular command code **632** based on the automobile ID **628** and command ID **630** contained in a command request received from mobile device **110** and/or from a terminal device associated with local system **106**

Returning to FIG. **5**, input device **508** may include one or more mechanisms that permit a user to input information or commands to server **118**. For example, input device **508** may include a keyboard, a touch screen, a touch pad, a mouse, a pen, a voice recognition device, a biometric recognition device, a still camera, a video camera, an accelerometer, a microphone, or any other type of device for enabling user input to a computing device.

Output device **510** may include one or more mechanisms that output information to the user of server **118**. For example, output device **510** may include a printer, a speaker, a display, or any other type of device for providing output to a user of a computing device. Communication interface **512** may include any device or system enabling server **118** to communicate over the Internet **108**.

FIG. **7** illustrates an exemplary representation of automobile web service server **120**. Automobile web service server **120** may have a similar configuration as automobile service server **118**, discussed above. For example, automobile web service server **120** may include a processor **700**, a main memory **702**, a read-only memory (ROM) **704**, a storage device **706**, an input device **708**, an output device **710**, and a communication interface **712** interconnected via a communications bus **714**. Storage device **706** may contain a wireless automobile key service website, which server **120** may serve to terminal devices of local system **106** in response to access requests received therefrom. The website will be discussed in more detail below.

Returning to FIG. **1**, local system **106** may include one or more terminal devices **122** on a local area network (LAN) **124**. In addition, local system **106** may include a LAN gateway **126** which interfaces between LAN **124** and the Internet **108**.

Terminal devices **122** may include a desktop computer, a laptop computer, a tablet PC, a personal digital assistant (PDA), an iPad®, or any other computing device that may connect to LAN **124** to access the Internet **108**. In one embodiment, terminal devices **122** may be associated with the operators of automobiles **112**. FIG. **8** shows an exemplary representation of terminal device **122**. Similar to the other devices discussed above, terminal device **122** may include a processor **800**, a main memory **802**, a ROM **804**, a storage device **806**, an input device **808**, an output device **810**, and a communication interface **802** for communicating on LAN **124**.

LAN **124** may include any device or system capable of providing local area connectivity to wired or wireless communication devices, such as terminal devices **122**. For example, wireless LAN **124** may operate according to a wireless fidelity (Wi-Fi) protocol such as IEEE 802.11 wireless protocol. LAN gateway **126** may include any device or system capable of connecting LAN **124** to the Internet **108**. For example, LAN gateway may include network hardware such as wireless routers, access points, switches, network address translators (NATs), or other network communication devices for providing a wired or wireless link between LAN **124** and the Internet **108**.

FIG. **9** illustrates an exemplary wireless automobile key service page **900**. In one embodiment, page **900** may be associated with automobile key service application **302** and displayed to an automobile operator using mobile device **110**. In one embodiment, page **900** may be part of automobile security monitoring application **302** and displayed to an automobile operator using mobile device **110**. The operator may log in to page **900** by inputting the operator's username, password, biometric data, and/or other authentication information to mobile device **110**. Mobile device **110** may then transmit the authentication information, and optionally the mobile ID **304**, to automobile service server **118** over cellular network **114**. Server **118** may check the provided authentication information against the authentication information **612** corresponding to the mobile ID **610** and/or the operator ID **608** in the stored account information. If server **118** properly authenticates the operator, server **118** may retrieve the operator's profile information **614** and default automobile ID **617** for the operator. In addition, server **118** may retrieve the health information **620**, maintenance information **622**, regis-

tration information, and insurance information **626** for the automobile **112** using the default automobile ID **617**. Server **118** may then transmit the retrieved information to mobile device **110** over the Internet **108**.

In a second embodiment, page **900** may be a web application associated with the website maintained by web server **120**, and may execute in a web browser of mobile device **110** or terminal device **122**. For example, the operator may access and log in to the website by inputting the operator's username, password, biometric data, and/or other authentication information to terminal device **122**. Terminal device **122** may then transmit the input authentication information server **120** over the Internet. Server **120**, in turn, may provide the authentication information to automobile service server **118**, which may check the authentication information against the authentication information **612** corresponding to the operator ID **608** in the stored account information. If server **118** properly authenticates the operator, server **118** may retrieve the operator's profile information **614** and default automobile ID **617**. In addition, server **118** may retrieve the health information **620**, maintenance information **622**, registration information **624**, and insurance information **626** for the automobile **112** corresponding to the default automobile ID **617**. Server **118** may then provide the retrieved information to automobile web service server **120**, which may transmit the retrieved information to terminal device **122** over the Internet **108**.

As shown in FIG. **9**, page **900** may include an automobile key menu user interface (UI) element **902**, an operator preferences menu UI element **904**, an automobile health menu UI element **906**, an automobile maintenance menu UI element **908**, and an automobile registration and insurance menu UI element **910**. In the example shown, automobile key menu UI element **902** has been selected, causing an automobile key menu **912** to be displayed.

Automobile key menu **912** may include an operator name display **914**. Operator name display **914** may convey the name of the automobile operator, for example, as provided by the operator at log-in (e.g., the account username) and/or as indicated by the received operator ID **608**.

Automobile key menu **912** may also include an automobile name display **916**. Automobile name display **916** may indicate the name of the automobile **112** currently selected for providing the disclosed wireless automobile key service. In one embodiment, automobile name display **916** may initially display the name of the automobile **112** assigned to the operator, as indicated by the received default automobile ID **617**. For example, automobile name display **916** may indicate the manufacturer, model, and/or year of manufacture of the operator's automobile. Alternatively, automobile name display **916** may indicate another name for the automobile **112** provided by the operator, for example, while registering for an account with automobile service system **104** (e.g., "Bob's beater").

Automobile key menu **912** may also include a start automobile UI element **918**. Start automobile UI element **918** may allow the operator to start the automobile **112** over the Internet **108**. For example, in response to the operator providing input to start automobile UI element **918** by, for example, selecting element **918** on a touch screen or with a mouse, mobile device **110** (or terminal device **122**) may transmit a start engine command request on cellular network **114** (or on LAN **124**). The start engine command request may be received at cellular network gateway **115** (or LAN gateway **126**), and transmitted on the Internet **108**. Server **118** may receive the start engine command request from the Internet **108**. Using the automobile ID **608** and the command ID **630**, server **118** may retrieve, from automobile command information **606**, the command code **632** corresponding to the engine start command for the operator's automobile **112**. Then server **118** may transmit the retrieved command code **632** to the automobile **112** over the Internet **108**. Cellular network gateway **115** may receive the command from the Internet **108** and communicate the command onto cellular network **114**. Cellular network communication module **404** of automobile **112** may receive the command code **632** from cellular network **114**, and may transmit an engine start command containing the received command code **632** on automobile network **420**. Finally, engine control module **414** may receive the command from automobile network **402** and, in response, may start the engine of the automobile **112**.

Automobile key menu **912** may also include a lock/unlock door UI element **920**. Lock/unlock door UI element **920** may allow the operator to lock/unlock a door of the automobile **112** over the Internet **108**. For example, in response to the operator providing input to lock/unlock door UI element **920**, mobile device **110** (or terminal device **122**) may transmit a lock/unlock door command request on cellular network **114** (or LAN **126**). The lock/unlock door command may be generated and communicated to the automobile **112** in a similar manner as discussed above with respect to the start automobile command.

Automobile key menu **912** may also include an apply operator profile settings UI element **922**. Apply operator profile settings UI element **922** may allow the operator to apply the settings of the operator's profile to the systems of the automobile **112**, over the Internet **108**. For example, in response to the operator providing input to UI element **922**, mobile device **110** (or terminal device **122**) may send a corresponding apply operator profile command request on cellular network **114** (or LAN **126**). The operator profile command request may be received at cellular network gateway **115** (or LAN gateway **126**), and transmitted on the Internet **108**. Server **118** may receive the apply operator profile command request from the Internet **108**. Using the operator ID **608** and/or the mobile ID **610** corresponding to mobile device **110**, server **118** may retrieve from operator information **602** the corresponding profile information **614** for the operator. As discussed above, the operator profile information **614** may identify certain desired settings of the systems of automobile **112**. For example, the operator profile information **614** may indicate the operator's desired climate system settings (e.g., 80° F. cabin temperature and high fan speed), desired audio system settings (e.g., 101.1 FM, volume 10, and certain station presets 1-5), desired operator comfort settings (e.g., a certain set position and set seat warmer setting), and desired operator awareness settings (e.g., a certain rearview mirror position and certain side mirror positions).

Based on the desired automobile system settings indicated by the operator profile information **614**, automobile service server **118** may retrieve appropriate command codes **632** for these systems from automobile command code information **606**. For example, automobile service server **118** may look up appropriate command codes **632** based on the automobile ID **627** and on the command IDs **630** associated with the operator's desired system settings **614**. Then, automobile service server **118** may generate one or more commands based on the retrieved command codes **632** to control the automobile systems to achieve the operator's desired settings. Continuing with the example above, server **118** may generate a command to control the climate system to heat the automobile **112** to 80° F. and to set a high fan speed; a command to control the audio system to play 101.1 FM at volume 10, and to apply the operator's desired station presets; a command to control the comfort system to move the driver's seat to the desired posi-

tion, and to set the seat warmer to high; and a command to control the operator awareness system to move the rearview mirror and side mirror to the desired positioning of the operator.

Server **118** may then transmit the generated command(s) to the automobile **112** over the Internet **108**. Cellular network gateway **115** may communicate the command(s) onto cellular network **114**. Cellular network communication module **404** of automobile **112** may receive the commands from cellular network **114**, and may broadcast corresponding command signals on automobile network **420**. The appropriate onboard modules **406-418** may then execute the commands by controlling the onboard systems to achieve the operator's desired settings indicated by the profile information **614**.

Operator preferences menu UI element **904** may allow the operator to view and/or change the operator's profile information **614**. For example, in response to the operator selecting UI element **904**, mobile device **110** (or terminal device **122**) may display an operator preference page (not shown) including the previously received operator profile information **614**. For example, the operator's climate control system preferences, audio system preferences, comfort system preferences, and/or awareness system preferences may be displayed on the page.

In addition, the page may include one or more UI elements allowing the operator to change the profile information **614**. For example, the page may include a UI element allowing the operator to change the operator's climate control system preferences (e.g., cabin temperature), to change the audio system preferences (e.g., station presets), to change the comfort preferences (e.g., seat position), and/or to change the awareness preferences (e.g., mirror and rear camera positions). If any operator preferences are changed, mobile device **110** (or terminal device **112**) may send a message to server **118** to update the operator's profile information **614** with the changed preferences.

Automobile health menu UI element **906** may allow the operator to view information regarding the health of the automobile **112**. For example, in response to the operator selecting UI element **906**, mobile device **110** (or terminal device **122**) may display an automobile health menu (not shown) containing the previously received health information **620** associated with the automobile **112**. For example, the health menu may display the battery charge level, fuel level, tire pressure, fluid levels, diagnostic alerts, and/or other health information associated with the automobile **112**.

Automobile maintenance menu UI element **908** may allow the operator to view information regarding the maintenance of the automobile **112**. For example, in response to the operator selecting UI element **908**, mobile device **110** (or terminal device **122**) may display an automobile maintenance menu (not shown) containing the previously received maintenance information **622** associated with the automobile **112**. For example, the maintenance menu may display information regarding any past maintenance performed on the automobile **112** (e.g., oil change on Dec. 6, 2010) and an indication of whether scheduled maintenance is due or overdue.

Similarly, automobile registration and insurance menu UI element **910** may allow the operator to view insurance and registration information associated with the automobile **112**. For example, in response to the operator selecting UI element **910**, mobile device **110** (or terminal device **122**) may display an automobile insurance/registration menu (not shown) containing the previously received registration information **624** and insurance information **626** associated with the automobile **112**. For example, the insurance/registration menu may display information indicating the dates during which the automobile insurance and registration are valid. In some embodiments, when an event occurs, such as the operator sending a command to start the engine, system **100** may automatically alert the operator via mobile device **110** if the fuel level is low, the insurance is expired, or automobile **112** is due for maintenance. For example, server **118** may automatically send an alert message (e.g., a text message or e-mail) to mobile device **110** indicating that the fuel level is low, the insurance is expired, the registration is expired, or automobile **112** is due for maintenance. Alternatively, mobile device **110** may automatically display a page showing the insurance information, registration information, and/or maintenance information associated with the automobile **112**.

Automobile key menu **912** may also include a change automobile UI element **924**. Change automobile UI element **924** may allow the operator to select a different automobile **112** on the wireless automobile key service account. That is, UI element **924** may allow the operator to select an automobile **112** other than the default automobile **112** with which to use the disclosed wireless automobile key service. For example, in response to the operator selecting UI element **924**, mobile device **110** (or terminal device **122**) may request from server **118** information regarding any other automobiles **112** on the account that the operator is permitted to operate. Server **118** may identify the other available automobiles **112** based on the automobile permission information **612** associated with the operator's ID **608**.

Server **118** may then transmit to mobile device **110** (or terminal device **122**) the automobile IDs **618** associated with the identified automobiles **112**. Then, mobile device **110** (or terminal device **112**) may display an automobile selection menu (not shown) allowing the operator to select a new automobile **112** from among the identified automobiles **112**. Subsequently, the operator may be able to perform the various automobile key service with respect with the selected new automobile **112**. For example, the operator may start the new automobile **112** using UI element **918**, may lock/unlock the door of the new automobile **112** using UI element **920**, and may apply the preferences indicated in the operator profile information **614** to the systems of the new automobile **112** using UI element **922**. In addition, the operator may view and/or change the operator profile information **614** for the new automobile **112** by selecting UI element **904**. The operator may also view health information **620**, maintenance information **622**, registration information **624**, and/or insurance information **626** associated with the new automobile **122** by respectively selecting UI elements **906**, **908**, and **910**.

FIG. **10** illustrates a flowchart of an exemplary method **1000** for implementing the disclosed wireless automobile key service, consistent with the disclosed embodiments. In one embodiment, method **1000** may be performed by mobile device **110**. For example, processor **202** of mobile device **110**, executing instructions stored in memory **204** and/or application **302**, may perform method **1000**.

In step **1002**, mobile device **110** may determine whether automobile **112** is detected on PAN **116**. Specifically, mobile device **110** may determine whether PAN communication interface **216** has established a connection, such as a Bluetooth connection, with PAN communication module **402** of automobile **112**. In one embodiment, mobile device **112** may detect automobile **112** on PAN **116** if the operator carries mobile device **110** within a certain range of automobile **112** (e.g., 10 meters, 50 meters, etc.). If automobile **112** is not detected on PAN **116**, mobile device **110** may wait until automobile **112** is detected on PAN **116**. If automobile **112** is detected on PAN **116**, mobile device **110** may launch wireless

automobile key service application **302**, if application **302** is not already running, in step **1004**.

In step **1006**, using the launched application **302**, mobile device **110** may prompt the operator for authentication data. For example, mobile device **110** may display a prompt associated with application **302** requesting that the operator enter the operator's account user name, password, biometric data, and/or other authentication information. Mobile device **110** may then transmit the input authentication to automobile service server **118**, over cellular network **114**. Server **118** may receive the operator's authentication information from the Internet **108**, and may check the received authentication information against the authentication information **612** for the operator corresponding to the operator ID **608** and/or the mobile ID **610**. Server **118** may then send a result of the authentication (e.g., successful or unsuccessful) to mobile device **110**.

In step **1008**, mobile device **110** may determine whether authentication of the operator was successful based on the result returned by server **118**. If authentication was unsuccessful, method may return to step **1006**, where mobile device **110** may re-prompt the operator for the operator's authentication data. If authentication is successful, however, mobile device **110** may wait for a wireless automobile key command from the operator, in step **1010**.

In one example, mobile device **110** may determine whether the operator has input a command request to unlock the door of the automobile **112**, in step **1012**. For example, after being successfully authenticated, mobile device **110** may display the wireless automobile key service page **900** of application **302**. The operator may select the automobile key menu user interface UI element **902** on the page **900**, and then select the lock/unlock door UI element **920** from the menu **912**. If mobile device **110** determines that the operator has not input a command to unlock the door, method **1000** may return to step **1010**, where mobile device **110** may continue to wait for a command from the operator.

If, however, mobile device **110** determines that the operator has input a command to unlock the door of the automobile **112**, mobile device **110** may send a request to automobile service server **118** to unlock the door of the automobile **112**, in step **1014**. Specifically, mobile device **110** may send the request on cellular network **114** via cellular communication interface **214**.

Further, mobile device **110** may determine whether the operator has also input a command request to start the automobile **112**, in step **1016**. For example, the operator may also select the start automobile UI element **918** displayed on the wireless automobile key service page **900**. If mobile device **110** determines that the operator has not also input a command request to start the automobile **112**, method **1000** may return to step **1010**, where mobile device **110** may continue to wait for a command from the operator.

If, however, mobile device **110** determines that the operator has also input a command to start the automobile **112**, mobile device **110** may send a request over cellular network **114** to automobile service server **118** to unlock the door of the automobile **112**, in step **1018**, as described above in connection with step **1014**. Moreover, mobile device **110** may send a request over cellular network **114** to server **118** to start the automobile **112**, step **1020**. In certain embodiments, mobile device **110** may also automatically send a request over cellular network **114** to server **118** to customize the settings of one or more systems of the automobile **112** based on based on the operator's profile, step **1022**.

Further, if mobile device **110** determines that the operator has also input a command to start the automobile **112**, mobile device **110** may determine whether the registration of the automobile **112** is current, step **1024**. In addition, in step **1028**, mobile device may determine whether the automobile insurance is current. Further, in step **1030**, mobile device **110** may determine whether the automobile health is satisfactory. For example, mobile device **110** may send a request for information regarding the automobile **112** to server **118** over cellular network **114**. Sever **118**, using the automobile ID **618**, may retrieve the health information **620**, the maintenance information **622**, the registration information **624**, and/or the insurance information **626** associated with the automobile **112**, and may send the retrieved information to mobile device **110** over the Internet **108**.

If mobile device **110** determines that the automobile registration, the automobile insurance, or both are not current, mobile device **110** may alert the operator, step **1026**. For example, in one embodiment, mobile device **110** may display the automobile registration/insurance page (not shown) of application **302**. On the page, the automobile registration information, the automobile insurance information, or both may be highlighted (e.g., in red) or notated to indicate that the automobile registration, insurance, or both are not current. Alternatively or additionally, mobile device **110** may generate and display a message to the operator indicating that the automobile registration, insurance, or both, are not current. Alternatively or additionally, mobile device **110** and/or server **118** may send a text message or e-mail to an account associated with the operator indicating that the automobile registration, insurance, or both are not current. It is to be appreciated that other methods of alerting the operator are possible and within the scope of the disclosure.

If mobile device **110** determines in step **1030** that the automobile health is unsatisfactory, mobile device **110** may similarly alert the operator. For example, mobile device **110** may determine the automobile health to be unsatisfactory if the battery charge level, the pressure of one or more tires, the fuel level, the oil pressure, fluid levels, etc. are below a threshold.

FIG. **11** is a flowchart illustrating an exemplary method **1100** for processing wireless automobile key commands, consistent with the disclosed embodiments. In one embodiment, method **1100** may be performed by server **118**. For example, processor **500** of server **118**, executing instructions stored in memory **502**, may perform method **1100**.

In step **1102**, server **118** may wait to receive a wireless automobile key command request from a mobile device **110** or from a terminal device **122**. For example, server **118** may monitor the Internet **108** via communication interface **512** for a request from a mobile device **110** or a terminal device **122** to unlock the door of an automobile **112**, to start the engine of an automobile **112**, and/or to customize the settings of one or more systems of an automobile **112** based on an operator profile. In step **1104**, server **118** may determine whether such a command request has been received. If a command request has not been received, method **1100** may return to step **1102**, where server **118** may continue to wait for a command request.

If server **118** determines in step **1104** that a command request has been received, server **118** may determine whether the received request is associated with a wireless automobile services account, step **1106**. For example, in one embodiment, the received command request may include an operator ID (e.g., provided at log-in) associated with the operator making the request, a mobile ID **304** associated with the mobile device **110** from which the request is received, and/or an automobile ID associated with the automobile **112** for which the command is requested. Server **118** may access the

account information stored in storage device **506**, and determine whether the operator ID, mobile ID, and/or automobile ID associated with the request is found in operator information **602** and/or in automobile information **604**. For example, server **118** may determine whether the operator ID, mobile ID, or automobile ID contained in the command request corresponds respectively to an operator ID **608**, mobile ID **610**, and/or automobile ID **618** associated with an account maintained by automobile service system **104**. If server **118** determines that the received command request is not associated with an account, method **1100** may return to step **1102**, where server **118** may wait for another command request.

If server **118** determines that the received command request is associated with an account, server **118** may generate a command for the automobile **112**, step **1108**. For example, server may generate a command to lock/unlock the door of the automobile **112**, a command to power on/off the automobile **112**, and/or a command to customize the settings one or more systems onboard the automobile **112** based on a profile associated with the operator, as described above.

Then, server **118** may send the command generated in step **1108** to the automobile **112** over the Internet **108**, step **1110**. Specifically, server **118** may transmit the command on the Internet **108** via communication interface **512**. The command may then be received at cellular network gateway **115** and transmitted on cellular network **114**. The command may be received at the automobile **112** over cellular network **114** by cellular network communication module **404**. Finally, cellular communication module **404** may transmit the command on automobile network **420**, and the command may be received and executed by the appropriate module **406-418** onboard the automobile **112**.

One of ordinary skill in the art will appreciate that computer programs for implementing the disclosure may be stored on and/or read from computer-readable storage media. The computer-readable storage media may have stored thereon computer-executable instructions which, when executed by a computer processor, cause the computer to perform, among other things, processes disclosed herein. Exemplary computer-readable storage media may include magnetic storage devices, such as a hard disk, a floppy disk, magnetic tape, or another magnetic storage device known in the art; optical storage devices, such as CD-ROM, DVD-ROM, or another optical storage device known in the art; and/or electronic storage devices, such as EPROM, a flash drive, or another integrated circuit storage device known in the art. The computer-readable storage media may be embodied by or in one or more components of system **100** (FIG. **1**).

While illustrative embodiments of the invention have been described herein, the scope of the invention includes any and all embodiments having equivalent elements, modifications, omissions, combinations (e.g., of aspects across various embodiments), adaptations and/or alterations as would be appreciated by those in the art based on the present disclosures. The limitations in the claims are to be interpreted broadly based on the language employed in the claims and not limited by examples described in the present specification or during the prosecution of the application. Further, the steps or processes of the disclosure may be modified in any manner, including by reordering steps, inserting steps, deleting steps, or having steps or functions performed by other entities of system **100** (e.g., mobile device **110**, servers **118** and **120**, and/or terminal device **122**), without departing from the principles of the disclosure.

It is intended, therefore, that the specification and examples be considered as exemplary only, with a true scope and spirit of the disclosure being indicated by the following claims and their full scope of equivalents.

What is claimed is:

1. A method for commanding an automobile using a mobile device, comprising:

connecting the mobile device to the automobile over a first network;

detecting that the mobile device is connected to the automobile over the first network;

launching a wireless automobile key service application on the mobile device in response to detecting that the mobile device is connected to the automobile over the first network;

receiving, via the application from an operator of the automobile using the mobile device, a request to issue a command to the automobile;

sending, from the mobile device to a server over a second network, a request to issue the command to the automobile over the second network; and

receiving, at the mobile device from the server over the second network and in response to the command, status information associated with the automobile.

2. The method of claim **1**, wherein the first network includes a personal area network (PAN) and the second network includes a cellular network.

3. The method of claim **1**, wherein the application is a mobile application configured to execute within a mobile operating environment on the mobile device.

4. The method of claim **1**, wherein the command is a command to unlock a door of the automobile or a command to start the automobile.

5. The method of claim **4**, further comprising, when the requested automobile command is the command to start the automobile, sending, from the mobile device to the server over the second network, a request to customize settings of at least one system of the automobile based on a profile associated with the operator.

6. The method of claim **5**, wherein the at least one system includes at least one of a climate control system, an audio system, an operator comfort control system, and operator awareness control system.

7. The method of claim **1**, wherein the status information associated with the automobile includes at least one of automobile health information, vehicle security information, maintenance information, and insurance information.

8. The method of claim **7**, further comprising alerting the operator via the mobile device based on at least one of the received automobile health information, vehicle security information, maintenance information, and insurance information.

9. The method of claim **1**, wherein receiving the request to issue the command to the automobile includes:

displaying, on the mobile device, a user interface including at least one user interface element, the user interface element corresponding to the request to issue the command to the automobile; and

receiving input from the operator via the at least one graphical user interface element.

10. A method for commanding an automobile, comprising:

connecting the automobile and a communication device to a server via a first network;

connecting the communication device to the automobile via a second network;

receiving, by the server over the first network, a request from an operator of the automobile using the communication device to issue a command to start the automobile to the automobile;

identifying an operator profile stored at the server that is associated with the operator, the operator profile defining customized settings of the operator for at least one system of the automobile;

sending, by the server over the first network, a command to the automobile to customize the settings of the at least one system of the automobile based on the operator profile;

sending, by the server over the first network, the command to start the automobile to the automobile; and

sending, to the communication device over the first network, status information associated with the automobile.

11. The method of claim **10**, wherein the first network includes at least one of a cellular network and the Internet, and the second network includes a personal area network (PAN).

12. The method of claim **11**, further including:

determining, by the server and based on at least one of the operator ID, the mobile ID, and the automobile ID, whether the operator, the automobile, or both the operator and the automobile are associated with a wireless automobile key service account; and

sending the command to customize or the command to start the automobile only when it is determined that the operator, the automobile, or both the operator and the automobile are associated with a wireless automobile key service account.

13. The method of claim **10**, wherein the request includes at least one of an operator ID associated with the operator, a mobile ID associated with the communication device, an automobile ID associated with the automobile, and a command ID associated with the requested automobile command.

14. The method of claim **10**, wherein the at least one system onboard the automobile includes at least one of a climate control system, an audio system, an operator comfort system, and operator awareness system.

15. The method of claim **10**, wherein receiving the request to issue the command to the automobile includes:

serving a web page to the communication device including at least one user interface element corresponding to the request to issue the automobile command; and

receiving, by the server over the first network, an indication of the operator selecting the at least one graphical user interface element.

16. The method of claim **10**, wherein the status information associated with the automobile includes at least one of automobile health information, vehicle security information, maintenance information, and insurance information.

17. The method of claim **16**, further comprising alerting the operator via the mobile device based on at least one of the automobile health information, vehicle security information, maintenance information, and insurance information.

18. An automobile service system for commanding an automobile using a communications device, comprising:

a communications interface for communicating with the automobile and the communications device over a first network, wherein the communications device connects to the automobile over a second network;

a storage device storing an operator profile associated with an operator of the automobile and defining customized settings of the operator for at least one system of the automobile; and

one or more processors configured to:

receive, via the communications interface over the first network, a request from the operator of the automobile to issue a command to start the automobile to the automobile;

identify, responsive to receiving the request, the stored operator profile;

send, via the communications interface over the first network, a command to the automobile to customize the settings of the at least one system of the automobile based on the identified operator profile; and

send, via the communications interface over the first network, the command to start the automobile to the automobile.

19. The automobile service system of claim **18**, wherein the first network includes at least one of a cellular network and the Internet, and the second network includes a personal area network (PAN).

20. The automobile service system of claim **18**, wherein the request includes at least one of an operator ID associated with the operator, a mobile ID associated with the communication device, an automobile ID associated with the automobile, and a command ID associated with the requested automobile command.

21. The automobile service system of claim **20**, wherein:

the storage device further stores wireless automobile key service account information, and

the one or more processors being further configured to:

determine, based on the stored wireless automobile key service account information and on at least one of the operator ID, the mobile ID, and the automobile ID, whether the operator, the automobile, or both the operator and the automobile are associated with a wireless automobile key service account; and

send, via the communications interface over the first network, the command to customize or the command to start the automobile only when it is determined that the operator, the automobile, or both the operator and the automobile are associated with a wireless automobile key service account.

22. The automobile service system of claim **18**, wherein the status information associated with the automobile includes at least one of automobile health information, vehicle security information, maintenance information, and insurance information.

23. A mobile device configured to command an automobile, comprising:

an input device;

a memory storing an application program;

a first communication interface connecting the mobile device to the automobile over a first network;

a second communication interface connecting the mobile device to a server over a second network; and

one or more processors configured to:

detect that the mobile device is connected to the automobile over the first network via the first communication interface;

launch the application program on the mobile device in response to detecting that the mobile device is connected to the automobile over the first network;

receive, via the input device, a request to issue a command to the automobile;

send, from the mobile device to a server over a second network via the second communication interface, a request to issue the command to the automobile over the second network; and

receive, at the mobile device over the second network via the second communication interface and in response to the command, status information associated with the automobile.

24. The mobile device of claim **23**, wherein the first network includes at least one of a cellular network and the Internet, and the second network includes a personal area network (PAN).

* * * * *