DUST CONTROL AND LOADING SYSTEMS, INC.

SERVICING THE WORLD'S BULK LOADING NEEDS

LOADING SPOUTS
LOADING SPOUT POSITIONERS
AERATION EQUIPMENT
SHUT-OFF VALVES

DIVERTER VALVES
DUST COLLECTION EQUIPMENT
BAG AND DRUM FILLING
PLANT AUTOMATION

ECO-FRIENDLY

DCL, INC. • P.O. BOX 125 • CHARLEVOIX, MICHIGAN 49720 • USA
(231) 547-5600 • (800) 748-0563 • WWW.DCLINC.COM

2009

Dust Control and Loading Systems Inc

COMPANY PROFILE

DCL, Inc. (Dust Control and Loading Systems) with corporate offices and manufacturing facilities located on the shores of Lake Michigan in Charlevoix, Michigan, U.S.A. DCL provides full dust control loading systems as well as partial components to the bulk material handling industry.

Seasoned veterans in Engineering and Manufacturing give the capabilities of designing custom systems or equipment to help meet particular needs. Involvement with companies, who deal in dry bulk materials from abrasive glass to toxic powder, chances are good that DCL is familiar with your needs. With a new state of the art manufacturing facility and warehousing capabilities that exceed 80,000 square feet, the ability to accommodate large projects and do in-house testing assures our customer of quality and functionality. Proven teams of Electrical Design Specialist are utilized in combining the right electrical functions for any industrial application. The use of PLC or computerized controls help to complete any DCL state of the art system.

DCL, provides a full product line that includes: Dust Free Loading Spouts, Spout Positioners, Horizontal and Vertical Slide Gates, Diverters, Triverters, Flow Control Valves, Air Gravity Conveyors, Silo Aeration, Dust Collectors, Bag and Drum Filling equipment, and Control packages. Individually or in full systems these components are available for modification, allowing for tailor made designs that can be created to fit with existing equipment or unique specifications. As specialists in load-out systems DCL is prepared to offer full turnkey solutions for Ship, Barge, Truck or Railcar loading.

CONTACT INFORMATION

Mailing Address:	DCL, Inc. P.O. Box 125 Charlevoix, Michigan 49720 United States	*Phone:*	800-748-0563 231-547-5600
		Fax:	231-547-3343 231-547-5832
Shipping Address:	DCL, Inc. 08660 Ance Road Charlevoix, Michigan 49720 United States	*Website:*	www.dclinc.com
		General Email:	info@dclinc.com

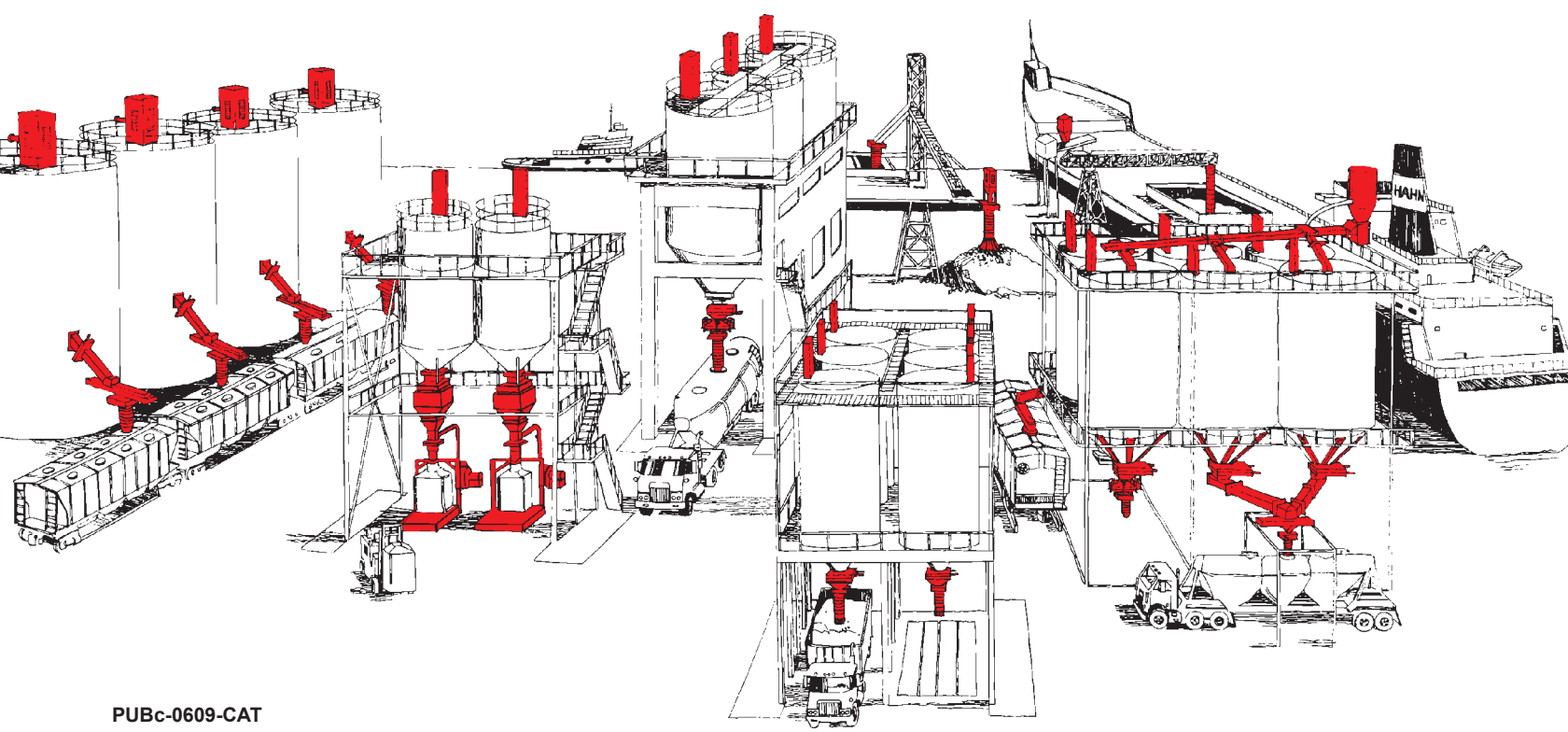

PUBc-0609-CAT

- **PRODUCT LINE OVERVIEW**
  Page: 1-2
- **LOADING SPOUTS**
  Page: 3
- **HEAVY DUTY LOADING SPOUTS**
  Page: 4-6
- **LOADING SPOUT POSITIONERS**
  Page: 7-8
- **AERATION EQUIPMENT**
  Page: 9-12
- **SLIDE GATE VALVES**
  Page: 13
- **CURVED BLADE VALVES**
  Page: 14
- **TIPPING VALVES**
  Page: 15
- **FLAT BLADE DIVERTER VALVES**
  Page: 16
- **CURVED BLADE DIVERTER VALVES**
  Page: 17
- **COMPACT FILTER MODULES**
  Page: 18
- **VENTILATION MODULES**
  Page: 19
- **DUST COLLECTORS & BIN VENTS**
  Page: 20
- **BAG FILL STATIONS**
  Page: 21
- **SYSTEM CONTROLS**
  Page: 22
- **SMARTLOADER VISION SYSTEM**
  Page: 23
- **CASE HISTORIES**
  Page: 24-25
  Page: 26-27

Dust Control and Loading Systems Inc

Product Line Overview

STANDARD DUTY LOADING SPOUTS
Application: Dry bulk material loading for enclosed or open trucks and railcars.
Specifications: Loading rates up to 500 STPH with travels up to 18’-0”.

HEAVY DUTY LOADING SPOUTS
Application: Dry bulk material loading for ships, barges, and stockpiles.
Specifications: Loading rates up to 6,000 STPH with travels exceeding 100’-0”.

SINGLE DIRECTION POSITIONERS
Application: Positions standard duty loading spouts in X axis.
Specifications: Loading area up to 6’-0” in single axis.

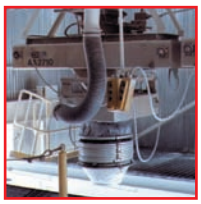

DUAL DIRECTION POSITIONERS
Application: Positions standard duty loading spouts in X and Y axis.
Specifications: Loading area up to 2’-0” x 6’-0”.

ROTARY POSITIONERS
Application: Positions standard duty loading spouts in rotary X and Y axis.
Specifications: Loading area up to 12’-0” diameter.

ARTICULATING ARM POSITIONERS
Application: Positions standard duty loading spouts in X and Y axis over a large area.
Specifications: Loading area up to 20’-0” x 60’-0”.

AERATION CONVEYORS
Application: Conveys dry bulk materials from point A to point B on a downward slope.
Specifications: Sizes from 6” to 36” wide with conveying capacities up to 1,000 CFM.

AERATION TROUGHS
Application: Aerates dry bulk material inside silos, bins, and domes.
Specifications: Sizes from 6” to 24” wide.

AERATION BIN BOTTOMS
Application: Aerates dry bulk material inside the bottom of silos and bins.
Specifications: Sizes from 2’-0” to 16’-0” diameter with multiple discharge configurations.

AERATION PENETRATION ADAPTORS
Applications: Allows dry bulk material to be withdrawn from the side of silo or bin.
Specifications: Sizes from 6” to 36” wide with conveying capacities up to 1,000 CFM.

AERATION ROTARY THROTTLE VALVES
Application: Precisely controls dry bulk material flow within a conveyor run.
Specifications: Sizes from 6” to 36” wide with capacities up to 1,000 CFM.

P.O. Box 125
08660 Ance Road

Dust Control and Loading Systems Inc
Charlevoix, Michigan 49720
www.dclinc.com or info@dclinc.com

Tele: 800-748-0563
Fax: 231-547-3343

Solaris Oilfield, Ex. 1127, p. 4
Solaris Oilfield v. Masaba, IPR2024-01179

AERATION VERTICAL SLIDE GATE VALVES
Application: Shut-off and flow control of dry bulk material within a conveyor run.
Specifications: Sizes from 6” to 36” wide with capacities up to 1,000 CFM.

SLIDE GATE VALVES
Application: Shut-off material flow from outlets of silos, bins, and other discharge points.
Specifications: Sizes from 6” to 36” square.

CURVED BLADE VALVES
Application: Shut-off and cut a large head of material flow from silos and bins.
Specifications: Sizes from 6” to 36” square.

TIPPING VALVES
Application: Air lock and monitor material flow from outlets of dust collectors and other points.
Specifications: Sizes from 6” to 18” square. Dual stacked configuration available.

FLAT BLADE DIVERTER VALVES
Application: Diverts vertical material flow to one of two outlets at a time.
Specifications: Sizes from 6” to 36” square. Offset and symmetric versions available.

FLAT BLADE TRIVERTER VALVES
Application: Diverts vertical product flow to one of three outlets at a time.
Specifications: Sizes from 6” to 36” square.

CURVED BLADE DIVERTER VALVES
Application: Shut-off, cut, and divert a large head of material flow from silos and bins.
Specifications: Sizes from 6” to 36” square.

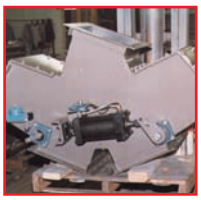

DUST COLLECTORS
Application: Collects dust from multiple transfer points using a series of duct work.
Specifications: Sizes up to 3,000 sq. ft. of filter media with up to 18,000 CFM air withdrawal.

FILTER MODULES
Application: Filters dust from a single point and discharges particles back into material flow.
Specifications: Sizes up to 350 sq. ft. of filter media with up to 6,000 CFM air withdrawal.

COMPACT FILTER MODULES
Application: Filters dust from a loading spout and discharges particles back into material flow.
Specifications: Sizes up to 660 sq. ft. of filter media with up to 5,000 CFM air withdrawal.

VENTILATION MODULES
Application: Filters dust from a single point and discharges particles back into material flow.
Specifications: Sizes up to 750 sq. ft. of filter media with up to 6,000 CFM air withdrawal.

BAG AND DRUM FILLING STATIONS
Application: Fills bulk bags or drums on a weigh scale, many options available.
Specifications: Bags from 25 to 60 cubic sq. ft. and drums up to 55 gallon.

SMARTLOADER VISION SYSTEM
Application: Automatically detects truck or railcar hatch opening and positions loading spout.
Specifications: Used in conjunction with standard duty loading spout and positioner.

CONTROLS AND SYSTEM DESIGN
DCL offers a wide variety of control options including but not limited to; PLC programming, handheld pendant controls, valve positioning packages, automation, etc. DCL can help design your load-out system with our in-house engineering and technical sales staff.

Solaris Oilfield, Ex. 1127, p. 5
Solaris Oilfield v. Masaba, IPR2024-01179

Loading Spouts

LOADING SPOUTS

EV enclosed vehicle or OV open vehicle spouts provide excellent dust free loading performance for trucks and railcars. DCL has incoporated 20 years of experience in bulk loading of dry materials into this new service friendly retractable spout design. The low profile feature makes this spout the best choice when faced with limited space conditions.

Model EV24 loading spout shown in retracted position.

- Easy access to drive components.
- Three cable hoist system providing maximum spout stability.
- Shipped completely assembled and tested.
- Slack cable and drive limits factory set.
- Internal stacking product flow control cones are constructed from urethane, AR steel or optional stainless steel.
- Wide selection of flexible outer spout sleeve materials for high and low temperature applications provided with heavy duty aluminum stacking type support rings.
- EV enclosed vehicle or OV open vehicle discharge configuration.
- Vertical travels up to 18 feet.
- Loading capacities of up to 450 cu ft/min of fine aerated materials.
- Collar style dust outlet for connection to a free standing dust collector or vent through frame configuration for connection to an inline filter module.

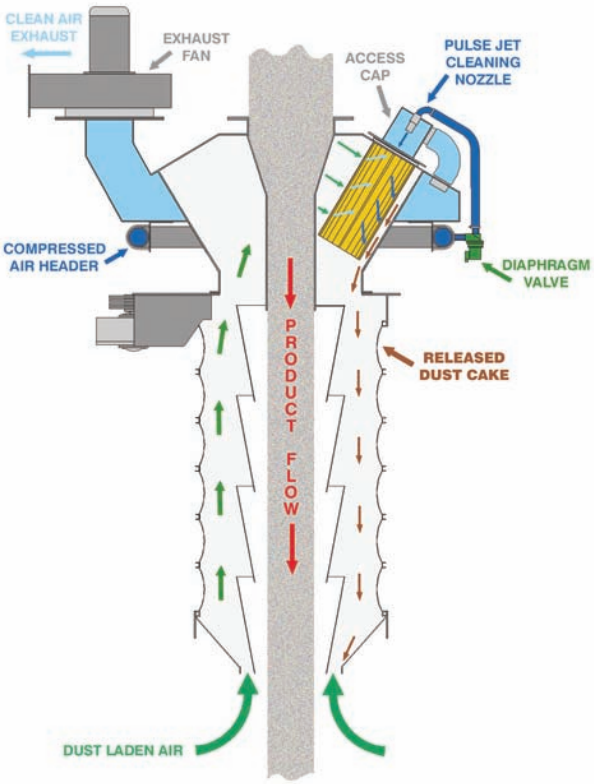

The CFM filter module adds 30" to the retracted spout height. UN800 spout shown.

SPOUT / CFM COMBINATION

DCL's new Compact Filter Module provides the industries lowest profile filter/loading spout combination. The CFM filter module can be used inline with loading spouts for dust control during the loading of dry, dusty materials into open or enclosed vehicles. The dust collected is re-entrained with the material being loaded which makes the CFM Filter Module an ideal and cost effective package. When comparing the new design of the CFM filter module to free standing units, the savings in space and money become apparent with the elimination of expensive duct work, discharge air locks and hopper discharge systems. For detailed CFM specifications see flier PUBc-0609-DCFM.

P.O. Box 125
08660 Ance Road

Dust Control and Loading Systems Inc
Charlevoix, Michigan 49720
www.dclinc.com or info@dclinc.com

Tele: 800-748-0563
Fax: 231-547-3343

Solaris Oilfield, Ex. 1127, p. 6
Solaris Oilfield v. Masaba, IPR2024-01179

Heavy Duty Loading Spouts

BARGE LOADING ● SHIP LOADING
STOCKPILING ● HIGH CAPACITY OPEN LOADING

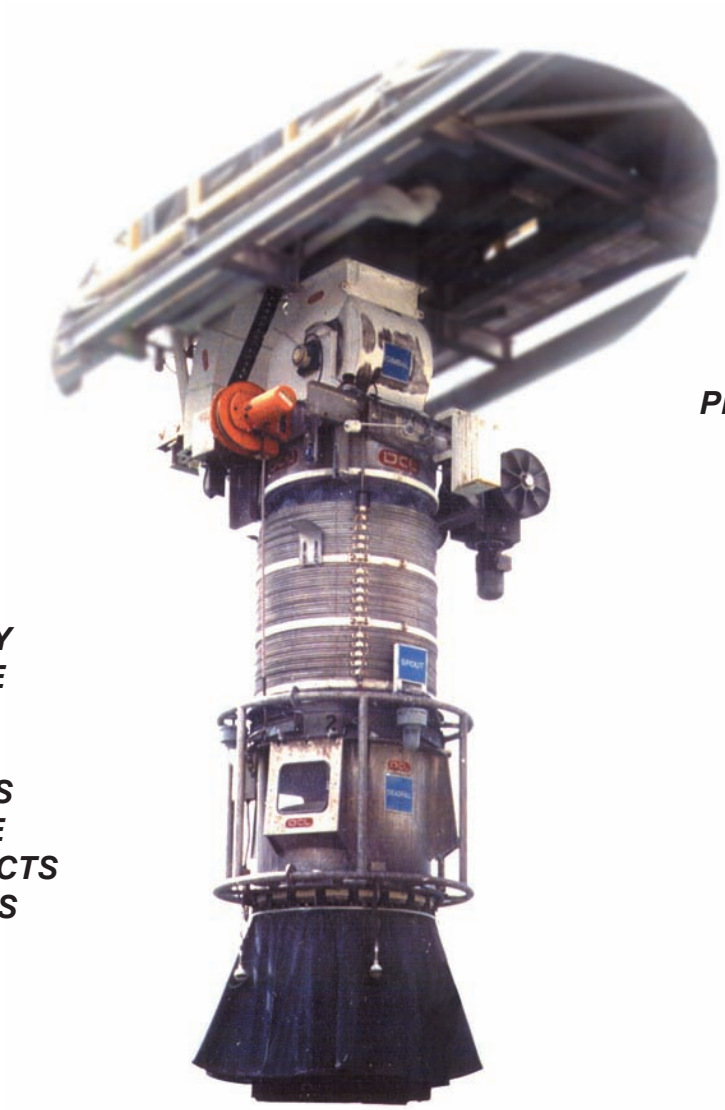

ALUMINA
BENTONITE CLAY
CALCINED COKE
CLINKER
COAL
CORN PRODUCTS
FERROUS OXIDE
FERTILIZER PRODUCTS
GRAIN PRODUCTS
GYPSUM
KAOLIN CLAY
LIGNITE

LIMESTONE
MAGNESIUM OXIDE
PHOSPHATE PRODUCTS
PENCIL PITCH
PORTLAND CEMENT
POTASH
SALT
SLAG
SODA ASH
SODIUM SULFATE
UREA
WOOD CHIPS
ZINC OXIDE

P.O. Box 125
08660 Ance Road

Dust Control and Loading Systems Inc
Charlevoix, Michigan 49720
www.dclinc.com or info@dclinc.com

Tele: 800-748-0563
Fax: 231-547-3343

Solaris Oilfield, Ex. 1127, p. 7
Solaris Oilfield v. Masaba, IPR2024-01179

Heavy duty flex style spouts use inner cones to contain product flow enclosed by an outer sleeve for dust withdrawal. Inner cones are available in durable, lightweight urethane, 500 BHN carbon steel, or in stainless steel.

Model OV58 with combination boom and telescopic airslide for alumina loading.

Pivoting gimbal allows different loading angles.

HEAVY DUTY LOADING SPOUTS

DCL Heavy Duty Loading Spouts utilize the latest technological advancements in the industry, providing dust free loading of a wide range of dry dusty materials at loading rates up to 6,000 STPH.

Heavy duty flexible style loading spouts are used for loading ships, barges, and stockpiling. All HD models include an outer flexible sleeve and rubber skirt that contains the dust emissions produced during loading. Also included is a rugged drive train and unique three cable lifting system for maximum stability. The inner cones contain the product flow and are offered in a variety of materials to suit each application.

Model OV58 shown w/unique DCL dust collector integral w/belt conveyor headchute.

The spout discharge is fitted with level sensing probes that measure the product pile and automatically raise the spout as the pile height increases. The spout can be connected to a dust collector for purposes of evacuating the dust created while loading. Most lumpy products can be successfully loaded with the standard rubber skirted discharge. Products that are considered extremely dusty can be successfully loaded with use of the "Deadfall" discharge accessory.

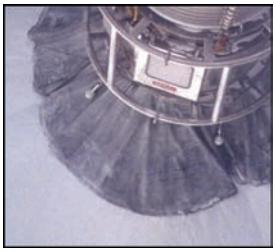

THE DCL "H STYLE DEADFALL" DISCHARGE

The H-Style Deadfall was designed to allow open vehicle loading of extremely dusty materials. Aerated cement is a perfect example of a material that is typically too dusty to load into any type of open vehicle. The H-Style Deadfall is designed with inner slitted rubber skirt and an outer weighted barrier skirt fixed to a hood. The hood size is dependent on the loading spout size. With this discharge design the dusty material is allowed to expand and decrease velocity within the hood allowing for the dust collection fan to remove any dust that has not settled onto the material pile.

Loading aerated cement into barges dust free using "H-Style Deadfall".

Ship loading spouts utilizing compact filter modules

Model OV44 loading spout with model CFM470 loading kaolin clay.

Dust free grain loading into barges.

Dust free coal stockpiling.

Dust free dry phosphate loading into ships.

THE DCL "DEADFALL" DISCHARGE

Until the advent of the DCL "DeadFall" dust suppressor, the choice for dust suppression when loading extremely dusty materials was limited to mechanized choke type devices. The DCL "DeadFall" mounts to the bottom of a standard loading spout and is contained within a housing incorporating counterweighted bleed air dampers and product plug relief doors. The unique features of this device are that it has no moving parts, requires virtually no maintenance, and is impervious to wear.

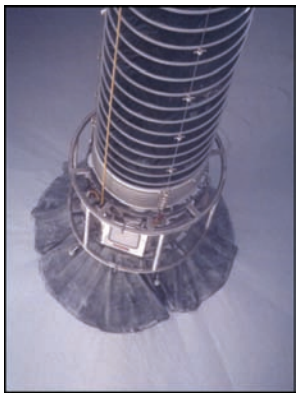

Our field proven design has outperformed the best that the industry has to offer. Products such as alumina, bentonite, calcined coke, phosphate rock, sodium sulfite, soda ash, potash, and magnesium oxide are now loading into ships at high rates, virtually dust free, and have far exceeded our customers expectations. Installation costs have shown to be recouped within a year of operation in product recovery as well as in reduced maintenance and service costs.

A. Normal Loading

B. Plug Relief Doors in Action

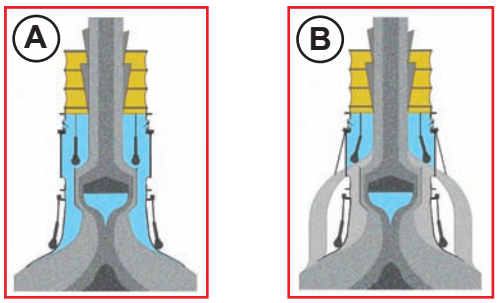

OV style heavy duty loading spouts with compact filter modules on swinging boom.

Unique OV66HD with 100 feet of travel loading extremely dusty kaolin clay.

TS style spout stacking coal.

Stockpiling of coal with use of a tripper conveyor.

Loading Spout Positioners

LOADING SPOUT POSITIONERS

Loading spout positioners increase speed and efficiency in any loading operation. Positioners are used in conjunction with standard duty loading spouts at truck and railcar loadout facilities. Model HP positioners virtually eliminates vehicle re-spotting once in the loading station.

All HP models are available in vent-thru and non vent-thru styles. The vent-thru style eliminates the need of venting the spout below with cumbersome duct work. The dust is drawn through the spout and positioner and can be vented with typical duct work to a central dust collector or DCL model CFM compact filter module can also be mounted directly about the spout positioner to eliminate dust work completely. A choice of construction materials allow handling of all types of products; fine, granular, lumpy, abrasive, corrosive, and sanitary applications.

HPS SINGLE DIRECTION POSITIONER

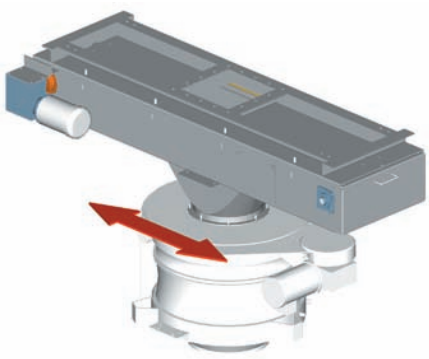

Single direction positioners are used to move standard duty loading spouts horizontally in the X axis when loading trucks or railcars. Single direction positioners allow the driver to stop the vehicle in the designated loading area without having to worry about being in the center of the loading station. The loading spout can then be positioned directly above the vehicle hatch by moving it left or right. DCL offers a selection of single direction positioners that provide horizontal travels from 2 feet [610 mm] up to 6 feet [1.8 m].

HPD DUAL DIRECTION POSITIONER

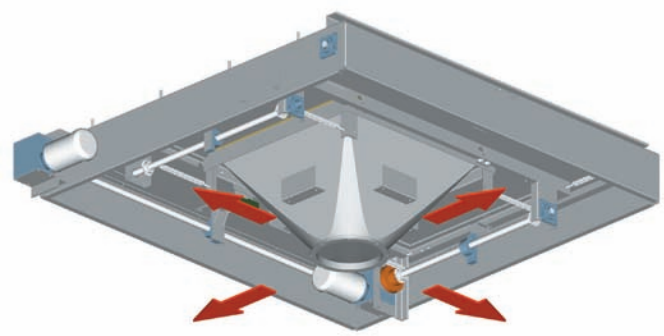

Dual direction positioners are used to move standard duty loading spouts horizontally in the X and Y axis when loading trucks or railcars. Dual direction positioners allow the driver to stop the vehicle in the designated loading area without having to be precise. The loading spout can then be positioned directly above the vehicle hatch. DCL offers a large selection of dual direction positioners that provide horizontal travels up to 6 feet [1.8 m] by 2 feet [610 mm].

P.O. Box 125
08660 Ance Road

Dust Control and Loading Systems Inc
Charlevoix, Michigan 49720
www.dclinc.com or info@dclinc.com

Tele: 800-748-0563
Fax: 231-547-3343

Solaris Oilfield, Ex. 1127, p. 10
Solaris Oilfield v. Masaba, IPR2024-01179

HPSR ROTARY POSITIONER

Rotary positioners are used to move standard duty loading spouts horizontally in a radial axis when loading trucks or railcars. Rotary positioners allow the driver to stop the vehicle in the designated loading area without having to be precise. The loading spout can then be positioned directly abovet he vehicle hatch. DCL offers a selection of rotary positioners that provide radial horizontal travels from 4 feet [1.2 m] in diameter up to 12 feet [3.6 m] in diameter.

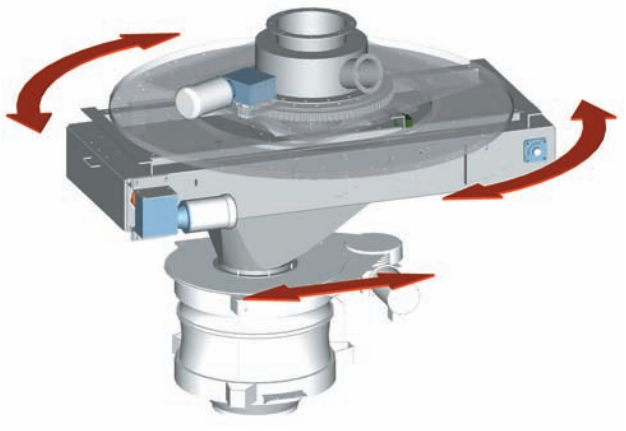

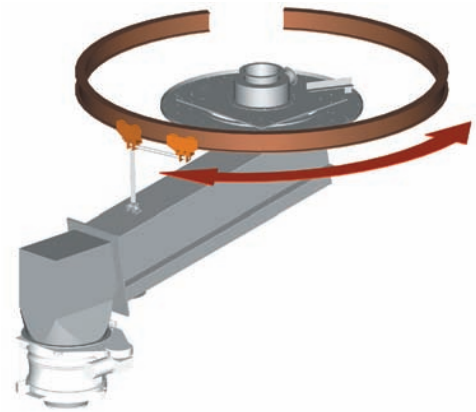

SAP SWING ARM POSITIONER

Swing arm positioners are versatile and efficient. This positioner is ideal when vehicle clearance is a concern. The SAP has the ability to swing out of the way of the truck or railcar as it is entering the load bay. Once the vehicle has stopped the positioner can swing into its loading position. Swing arm positioners can also be configured to load multiple hatches and/or multiple railcars.

DCL offers a selection of swing arm positioners that provide a swing radius of up to 16 feet [4.1 m]. Conveying arms can be provided as aeration conveyors, en masse, and screw conveyor configurations.

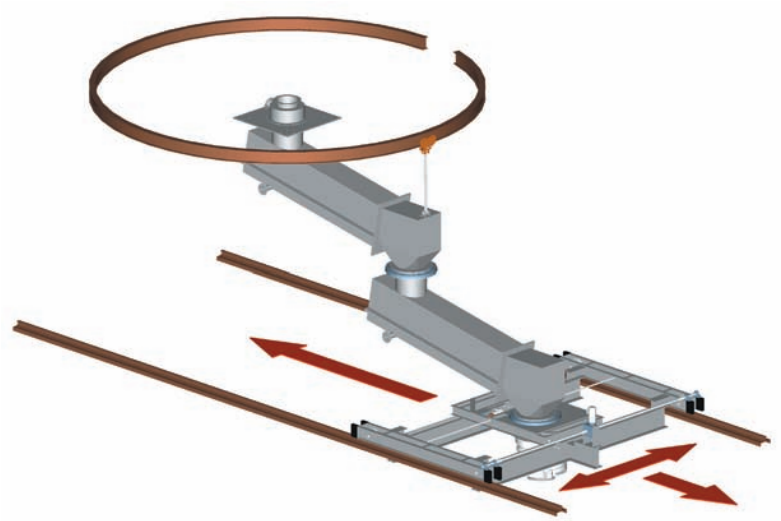

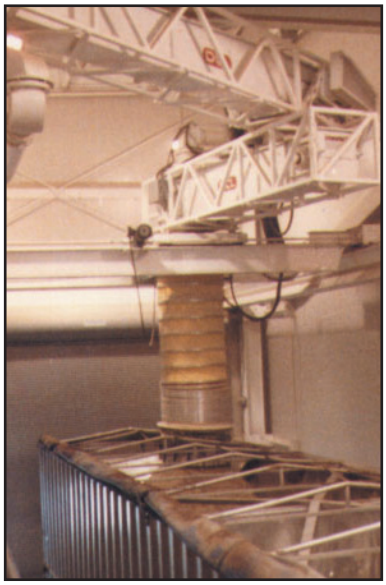

APA ARTICULATING POSITIONING ARM

Articulating positioning arms increase speed and efficiency in any loading operation. APA positioners are used to move standard duty loading spouts horizontally in the X and Y axis when loading trucks or railcars. Articulating positioning arms facilitate multiple hatch locations and eliminate vehicle re-spotting once in the loading station.

DCL offers a large selection of articulating positioning arms that provide horizontal travels up to 60 feet [18.3 m] by 6 feet [1.8 m]. Conveying arms can be provided as aeration conveyor, en masse, and screw conveyor configurations.

Solaris Oilfield, Ex. 1127, p. 11
Solaris Oilfield v. Masaba, IPR2024-01179

Aeration Equipment

CONVEYORS ● BIN BOTTOMS ● LUMP TRAPS
TROUGHS ● SILO PENETRATION ADAPTORS
ROTARY THROTTLE & VERTICAL SLIDE GATE VALVES
TURNING BOXES ● SILO & DOME FLOORS

P.O. Box 125
08660 Ance Road

Dust Control and Loading Systems Inc
Charlevoix, Michigan 49720
www.dclinc.com or info@dclinc.com

Tele: 800-748-0563
Fax: 231-547-3343

Solaris Oilfield, Ex. 1127, p. 12
Solaris Oilfield v. Masaba, IPR2024-01179

Aerated bin bottom discharging into a conveyor with slide gate valves.

Aerated distribution box with four discharges.

Aeration conveyor run.

Aerated lump trap with slide gate valve.

Aeration conveyors feeding multiple silos.

AERATION EQUIPMENT OVERVIEW

Under normal conditions a powder runs down a chute only when the slope exceeds the natural angle of repose of the powder. A fluidized powder however, runs down a chute which has an angle much less than the natural angle of repose of the powder. The principle of air gravity conveying involves the reduction of the natural angle of repose of a pulverized material to a fluidized angle which is slightly less than the angle of declination of the conveyor. This is accomplished by passing low pressure air through a porous membrane and into a bed of pulverized material.

A large variety of materials are handled on aeration conveyors regardless of their abrasive nature or bulk density. The only criteria is particle size and moisture. Generally, a product should have a particle distribution of 100% through a 20 mesh screen. It is possible to convey coarser materials provided there is a greater percentage of fine material to fill the voids. Free moisture content should be below 1%, however materials with higher moisture contents have been conveyed. With some materials, the characteristics of particles may make aeration impossible or uneconomical. A powder that can be fluidized usually possess the characteristic of flowing freely through the fingers, feeling clean and dry, and not flaky or fibrous.

AERATION CONVEYORS

Aeration conveyors are used to convey products from point A to point B by using aeration and gravity. Minimum suggested conveyor angle is 8 degrees, but may be as low as 6 degrees depending on product material type. Turning boxes, headchutes, and distribution boxes are available to use in conjunction with aeration conveyors.

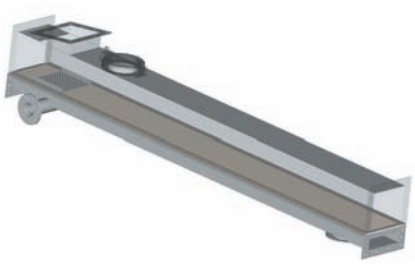

DCL offers a large selection of aeration conveyors from 6 inches [152 mm] wide up to 36 inches [914 mm] wide and conveying capacities up to 1000 cubic feet per minute [28.3 m³/min]. Conveyors also are available in a high top or low top design allowing for maximum flow rate or minimum head room depending on the application.

AERATED LUMP TRAPS

Aeration lump traps are an ideal when large lumps are present in material. Lumps are generally created in the silo by moisture and are typically unacceptable for the consumer's vehicle being loaded. The lump trap eliminates large lumps by creating a gravity trap in-line with an aeration conveyor. This is accomplished by passing low pressure air through an overlapping configuration of porous membrane media and into the bed of the material being handled. Heavy lumps fall and are caught in the bottom of the lump trap which automatically empties using a level sensor accompanied by a series of slide gate valves.

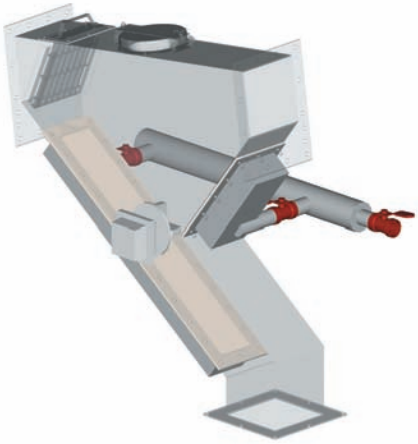

DCL offers a selection of aeration lump traps from 6 inches [152 mm] wide up to 36 inches [914 mm] wide and conveying capacities up to 1000 cubic feet per minute [28.3 m³/min]. Lump traps are also available in a high top or low top design allowing for maximum flow rate or minimum head room depending on the application.

Solaris Oilfield, Ex. 1127, p. 13
Solaris Oilfield v. Masaba, IPR2024-01179

AERATED BIN BOTTOMS AND TROUGHS

Aeration bin bottoms are used to promote consistent product withdrawal from large diameter flat or conical bottom storage silos.

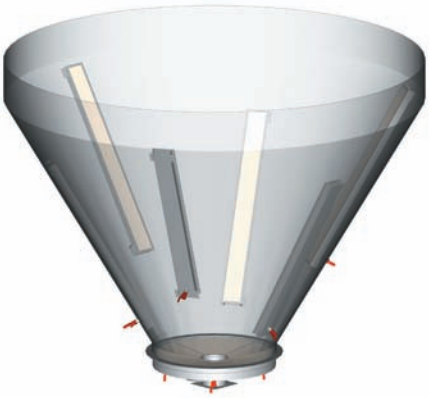

DCL offers a large selection of aeration bin bottoms from 2 feet [610 mm] in diameter up to 16 feet [4.9 m] in diameter. Bin bottoms are also available with custom discharge configurations allowing for multiple conveyor runs from one silo.

Troughs are typically mounted inside the conical section of the silo and are equally spaced along a 360 degree pattern. However they can also be used in flat bottom silos and only require a 6 degree slope from the inner silo wall of the silo to the discharge point.

DCL offers a selection of aeration troughs from 6 inches [152 mm] wide up to 24 inches [610 mm] wide.

Aerated bin bottom with side discharge and flow control valves.

Aeration conveyor being fed by bucket elevator.

SILO PENETRATION ADAPTORS

Aeration silo penetration adaptors allow material to be withdrawn from the side of any silo. They can be easily retrofitted in the field to existing silos when silo bottom discharges are not possible.

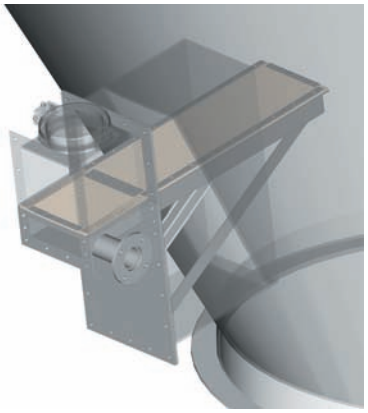

DCL offers a large selection of aeration silo penetration adaptors from 6 inches [152 mm] wide up to 36 inches [914 mm] wide and conveying capacities up to 1000 cubic feet per minute [28.3 m³/min].

Silo penetration adaptor with flow control valves feeding loadout station.

FLOW CONTROL VALVES

Rotary throttle valves are an excellent means to control material flow while air gravity conveying.

The rotary throttle valve uses a rotary parabolic blade that allows for a low profile design that delivers precise flow control. A 4-20m electric actuator is used to actuate the valve when real time infinite positioning is required. If real time infinite positioning is not required DCL uses a pneumatic actuator with a 3 position package.

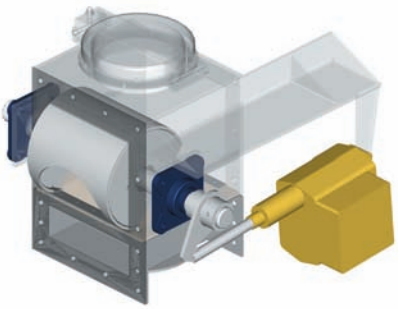

Vertical slide gate valves are used in applications where a material flow shut-off is required in air gravity conveying applications. The vertical slide gate uses a Blanchard ground chamfered blade. Not only can it be used to shut off material flow, it can also be used as a flow control.

Vertical manual and pneumatic slide gate valve.

Solaris Oilfield, Ex. 1127, p. 14
Solaris Oilfield v. Masaba, IPR2024-01179

AERATED TURNING BOXES

Aerated turning boxes are used in conjunction with aeration conveyors allowing for turns in the conveyor run. Standard turning boxes are designed for 30, 45, and 90 degree turns. The degree of angle can be customized per the customers needs. Turning boxes are sized to the aeration conveyor being used in order to insure a proper flow rate.

DCL offers a large selection of aerated turning boxes from 6 inches [152 mm] wide up to 26 inches [914 mm] wide and conveying capacities up to 1000 cubic feet per minute [28.3 m³/min].

Aeration conveyors distributing to multiple silos using a combination of turning boxes and vertical slide gates.

AERATED SILO / DOME FLOOR

DCL has made it possible to reclaim up to 99% of material in any sized silo or dome.

A DCL aerated floor can be either a side sloped or center sloped discharge design with live floor coverage dependent on the customer reclaim requirements and material type. Different material types require that the troughs be spaced within a maximum distance from each other.

DCL has learned from field experience that zone configuration is most important. Attention must be given to peripheral areas to avoid creating aerated surfaces that can become partially uncovered.

The aeration troughs are arranged in patterns which result in uncomplicated and simple plumbing procedures with all components installed above floor level (no buried trough, piping, or zone valving). When geometry dictates - wedge or other shaped sections are incorporated into the floor layout to fill unwanted voids.

One of the biggest advantages of the DCL system is that there are no moving parts. Also, there is a very limited time period that the aeration media is subject to activation with the exception of the discharge. Maintenance does not require that heavy equipment be moved into the dome. Only the aeration media itself should ever require attention. Should a single 10 foot aeration trough pad within a zone or an entire zone become non functional, reclaim would not likely be affected.

Another large advantage is that the DCL design power consumption requirements are much less than other designs on the market. This makes for significant energy savings.

Aerated troughs for dome floor installation.

30'-0" diameter fully aerated flat bottom silo using aeration troughs.

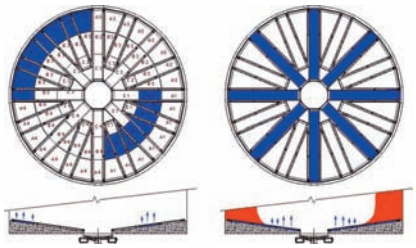

The above left graphic shows the correct way to aerate a silo floor bottom with multiple concentrated zones. The above right graphic shows the incorrect way to aerate a silo floor bottom.

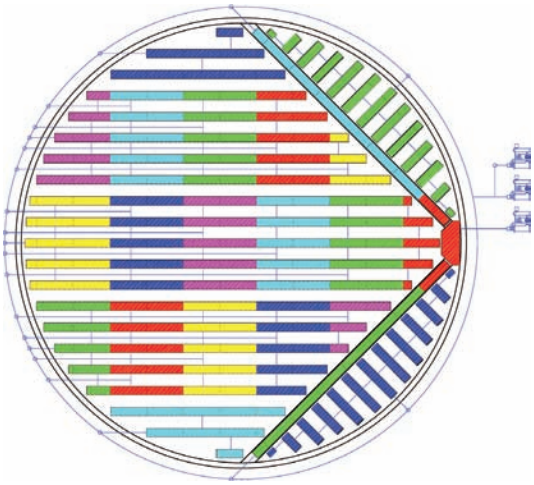

The drawing to the left is a 120'-0" diameter dome with side discharge. This floor is sloped at 8 degree and has (22) individual zones. Piping is through side wall type with interconnecting troughs. Three 1000 CFM @ 10 PSI positive displacement blowers are used in pulsing sequence to empty dome. Aerated floor coverage is 33% with a 96% initial reclaim rate.

The drawing to the right is a 120'-0" diameter dome with center discharge. This floor is sloped at 8 degree and has (17) individual zones. Piping is through center tunnel with interconnecting troughs. Three 1000 CFM @ 10 PSI positive displacement blowers are used in pulsing sequence to empty dome. Aerated floor coverage is 26% with a 93% initial reclaim rate.

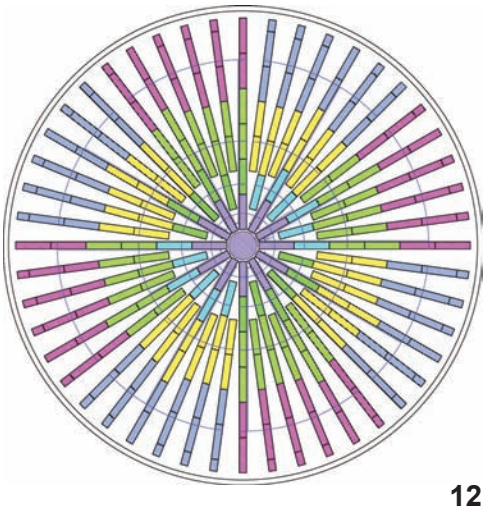

Dust Control and Loading Systems Inc

Slide Gate Valve

SLIDE GATE VALVE

DCL's Model SV Slide Gate Valves are designed to shut off product flow from outlets of storage bins, silos, conveyors, and other discharge points handling dry bulk materials.

These rugged heavy duty slide gate valves are available in standard sizes ranging from 6 inches to 36 inches square. Sizes larger than 36 inches, rectangular, and special configurations including dual opposing blade and dewatering designs are available on a custom build basis.

A choice of construction materials allow handling of all types of products and applications; fine, granular, lumpy, abrasive, corrosive, or sanitary.

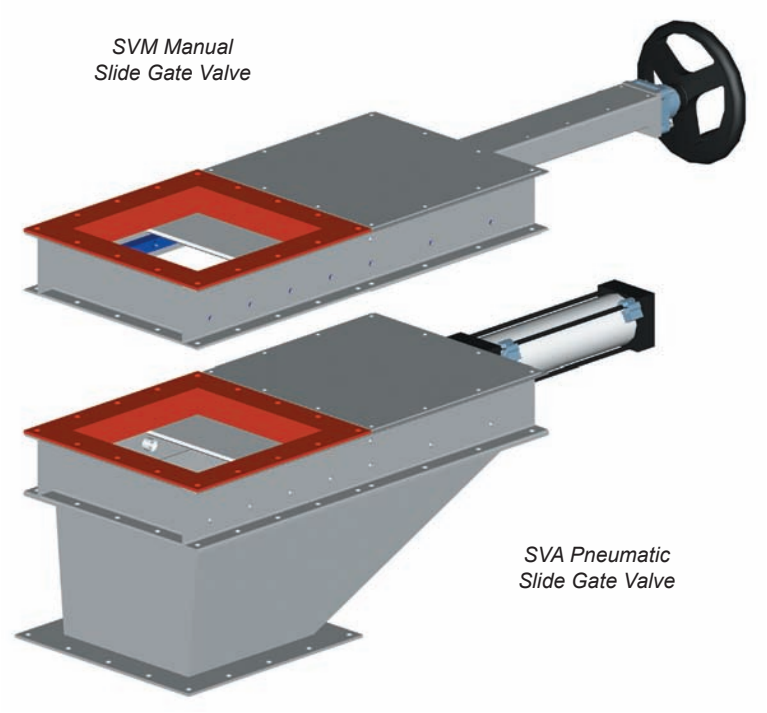

FEATURES

The valve frame is constructed from heavy duty 3/16 inch steel with a hardened blanchard ground blade which rides on cam rollers or solid guides. Actuation of Slide Gate Valves can be accomplished in many ways; pneumatically for fast action, hydraulically for power, electrically for precise positioning, and manually for maintenance and flow control.

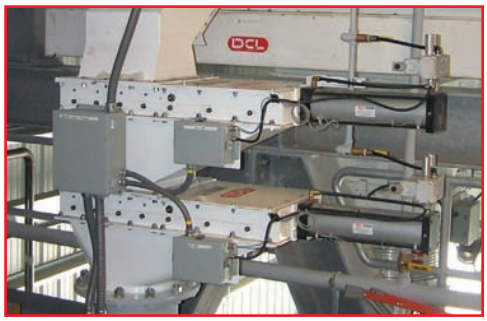

Blade seals are selected according to the material being handled and are available to suit any application. A molded urethane inlet liner provides an ideal blade seal when handling granular products. Additional frame seals are available and should be used when handling fine dusty material. Adjustable seals are also available to virtually eliminate the need for seal replacement. These seals are adjusted from the outside of the valve frame, which makes it unique to the industry.

All SV Slide Gate Valves are equipped with a dust tight transition unless mounted directly above another valve. This transition is recommended when handling fine dusty material.

ULTIMATE FLOW CONTROL PACKAGE

The ultimate flow control package consists of a manually actuated and a powered Slide Gate Valve. With this configuration you can preset product flow with the manual valve and use the powered valve as a shut off.

In the case of product maintenance or equipment failure you can manually shut off the flow valve and service any equipment beneath it.

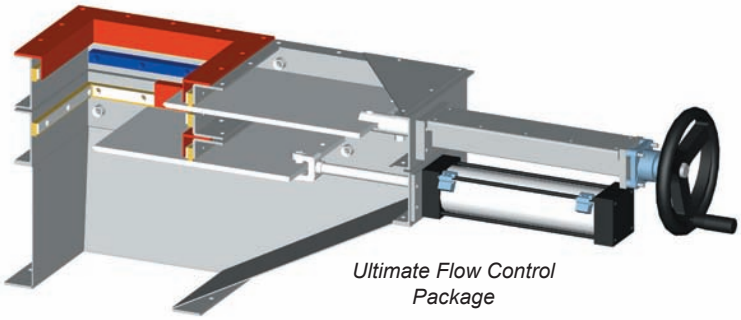

P.O. Box 125
08660 Ance Road

Dust Control and Loading Systems Inc
Charlevoix, Michigan 49720
www.dclinc.com or info@dclinc.com

Tele: 800-748-0563
Fax: 231-547-3343

Solaris Oilfield, Ex. 1127, p. 16
Solaris Oilfield v. Masaba, IPR2024-01179

Curved Blade Valve

CURVED BLADE VALVE

DCL's Model Curved Blade Valves are designed to cut off product flow from outlets of storage bins, silos, conveyors, gravity flow chutes and other discharge points handling dry bulk materials.

These rugged heavy duty curved blade valves are available in standard sizes ranging from 6 inches to 36 inches square. Sizes larger than 36 inches, rectangular, and special configurations including hardened liners are available on a custom build basis.

A choice of construction materials allow handling of all types of products; fine, granular, abrasive, corrosive, and sanitary applications.

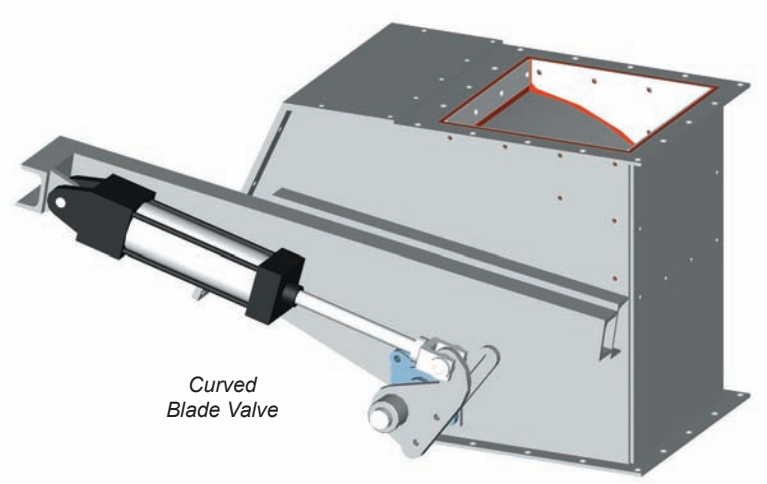

Curved Blade Valve

FEATURES

The Curved Blade Valves are fast acting, tight sealing, and very effective for regulating flow rates. The curved blade valve should only be used when handling fine or granular materials and not materials containing a large percentage of lumps.

The Curved Blade housing is constructed of plate steel with cross member supports on larger sizes. The reinforced curved blade pivots on two flanged bearings allowing it to open and close with ease. Actuation of Curved Blade Valves can be accomplished in many ways; pneumatically for fast action, hydraulically for power, electrically for precise positioning, and manually with a chain wheel or lever.

The seals on the Curved Blade Valve are designed to eliminate product leakage when the blade is in the shut off position. The seals are mounted to the Curved Blade housing instead of the blade allowing for easy access and replacement. Blade seals are selected according to the material being handled and are available to suit any application.

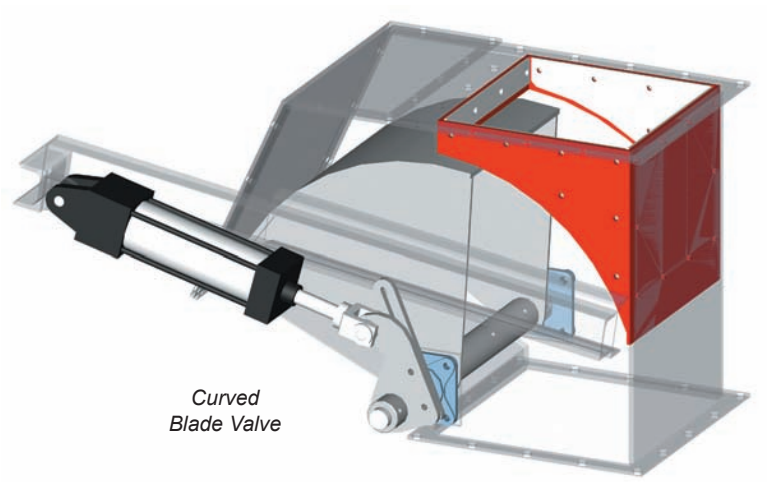

Curved Blade Valve

P.O. Box 125
08660 Ance Road

Dust Control and Loading Systems Inc
Charlevoix, Michigan 49720
www.dclinc.com or info@dclinc.com

Tele: 800-748-0563
Fax: 231-547-3343

Solaris Oilfield, Ex. 1127, p. 17
Solaris Oilfield v. Masaba, IPR2024-01179

Tipping Valve

TIPPING VALVE

DCL's Model Tipping Valves are designed as an airlock and to monitor product flow from outlets of dust collectors, filter modules, and other discharge points handling dry bulk materials.

Tipping Valves are very effective inexpensive airlocks. Actuation of tipping valves can be accomplished in many ways; pneumatically for fast action, electrically for precise positioning, and by gravity. The seals are designed to eliminate product leakage when the blade is in the shut off position and act as an airlock. Blade seals are selected according to the material being handled and are available to suit any application. Tipping valves can be suited to handle product at 500 degrees Fahrenheit.

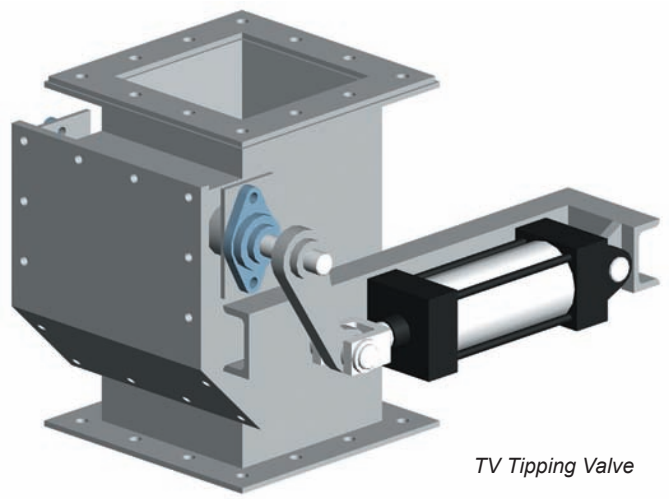

TV Tipping Valve

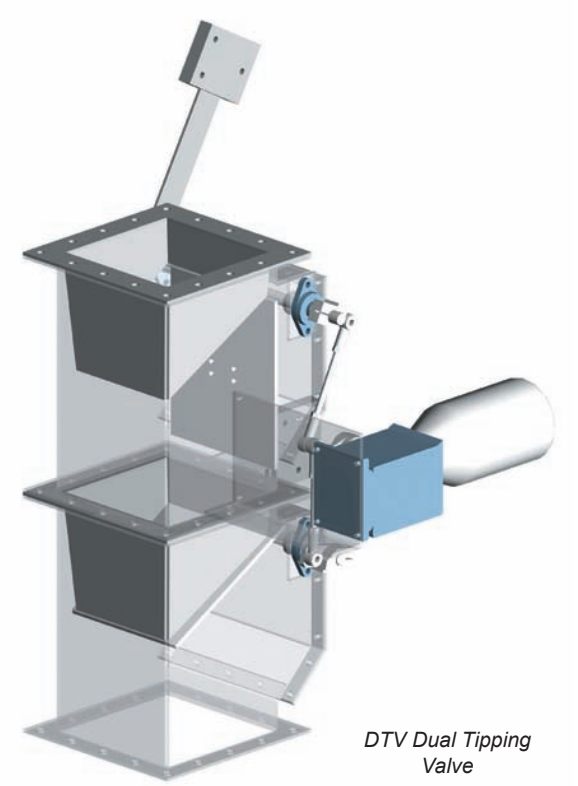

DTV Dual Tipping Valve

DUAL TIPPING VALVE

Dual Tipping Valves are designed as an airlock and to monitor product flow from outlets of dust collectors, filter modules, and other discharge points handling dry bulk materials.

A Dual Tipping Valve is actually two single Tipping Valves mounted together. This allows more product flow and offers an even better airlock. Dual tipping valves have a tandem actuator configuration which only requires one actuator to actuate each valve.

DCL offers a large selection of tipping valves from 6 inches [152 mm] square up to 18 inches [457 mm] square. Tipping valves are also available in sizes larger than 18 inches [457 mm] and in special configurations on a custom build basis.

A choice of construction materials allow handling of all types of products; fine, granular, abrasive, corrosive, and sanitary applications.

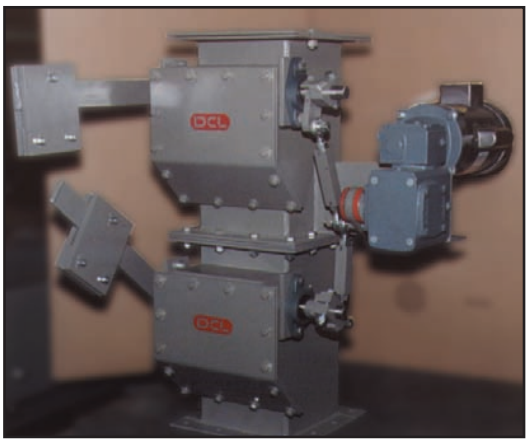

P.O. Box 125
08660 Ance Road

Dust Control and Loading Systems Inc
Charlevoix, Michigan 49720
www.dclinc.com or info@dclinc.com

Tele: 800-748-0563
Fax: 231-547-3343

Solaris Oilfield, Ex. 1127, p. 18
Solaris Oilfield v. Masaba, IPR2024-01179

Dust Control and Loading Systems Inc

Curved Blade Diverter Valve

CURVED BLADE DIVERTER VALVE

DCL's Model Curved Blade Diverter Valves are designed to direct and cut off product flow from outlets of storage bins, silos, conveyors, gravity flow chutes and other discharge points handling dry bulk materials.

These rugged heavy duty curved blade diverters are available in 30 and 45 degree symmetrical configurations. Standard sizes range from 6 inches to 36 inches square. Sizes larger than 36 inches, rectangular, and special configurations including hardened liners are available on a custom build basis.

A choice of construction materials allow handling of all types of products; fine, granular, abrasive, corrosive, and sanitary applications.

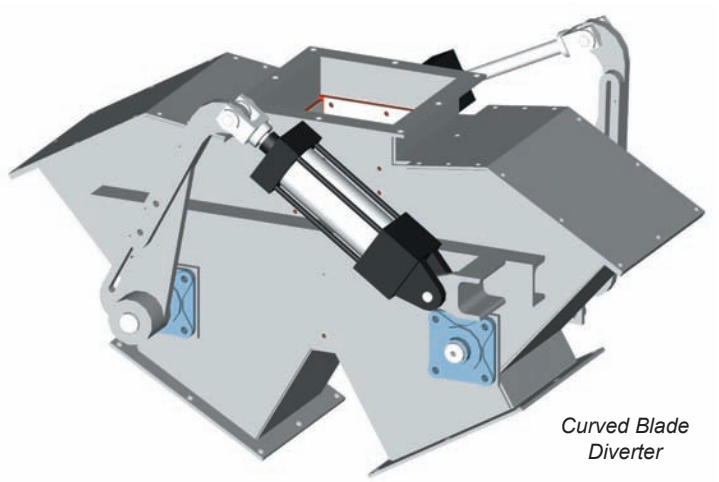

Curved Blade Diverter

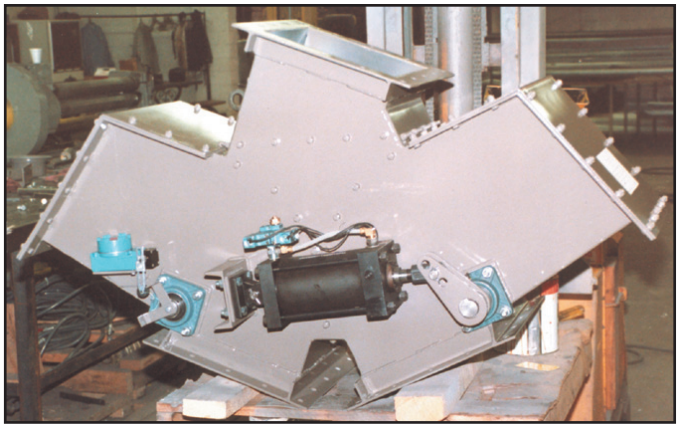

FEATURES

The Curved Blade Diverter Valves are fast acting, tight sealing, and very effective for regulating flow rates. The diverter configuration will allow not only a selection of flow to one or both legs at the same time, but will also act as a complete shut off valve. The curved blade valve should only be used when handling fine or granular materials and not materials containing a large percentage of lumps.

The CBD housing is constructed of plate steel with cross member supports on larger sizes. Each reinforced curved blade pivots on two flanged bearings allowing it to open and close with ease. Actuation of Curved Blade Diverter Valves can be accomplished in many ways; pneumatically for fast action, hydraulically for power, electrically for precise positioning, and manually with a chain wheel or lever.

The seals on the Curved Blade Diverter are designed to eliminate product leakage when the blade is in the shut off position. The seals are mounted to the housing instead of the blade allowing for easy access and replacement. Blade seals are selected according to the material being handled and are available to suit any application.

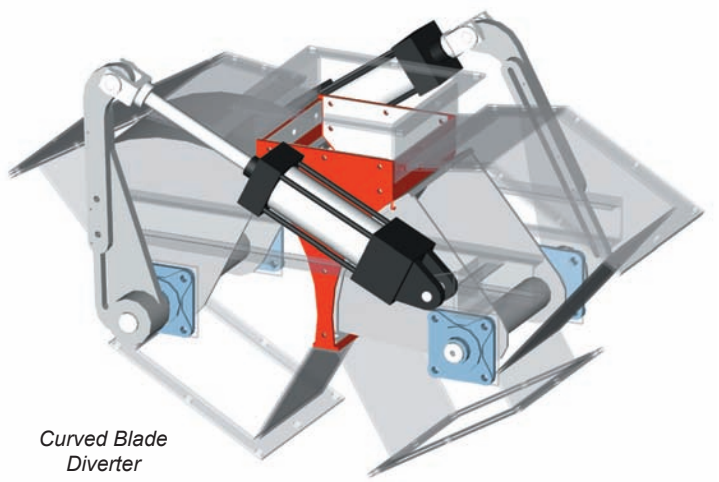

Curved Blade Diverter

P.O. Box 125
08660 Ance Road

Dust Control and Loading Systems Inc
Charlevoix, Michigan 49720
www.dclinc.com or info@dclinc.com

Tele: 800-748-0563
Fax: 231-547-3343

Solaris Oilfield, Ex. 1127, p. 19
Solaris Oilfield v. Masaba, IPR2024-01179

Flat Blade Diverter Valve

FLAT BLADE DIVERTER VALVE

DCL's Model Flat Blade Diverter Valves are designed to direct product flow from outlets of storage bins, silos, conveyors, gravity flow chutes and other discharge points handling dry bulk materials.

These rugged heavy duty flat blade diverters are available in offset, symmetrical, and triverter configurations. Standard sizes range from 6 inches to 36 inches square. Sizes larger than 36 inches, rectangular, and special configurations including hardened liners are available on a custom build basis.

A choice of construction materials allow handling of all types of products; fine, granular, lumpy, abrasive, corrosive, and sanitary applications.

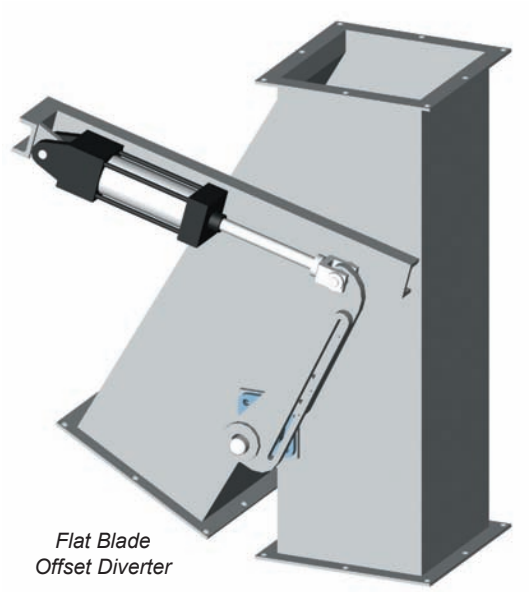

Flat Blade Offset Diverter

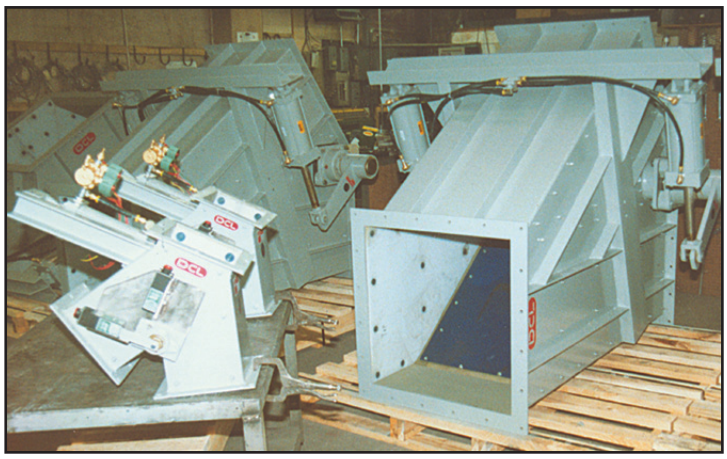

FEATURES

The housing is constructed of plate steel with cross member supports on larger sizes. The reinforced blade pivots on two flanged bearings allowing it to open and close with ease. Actuation of Flat Blade Diverter Valves can be accomplished in many ways; pneumatically for fast action, hydraulically for power, electrically for convenience, and manually with a chain wheel or lever.

The seals on the Flat Blade Diverter are designed to eliminate product leakage when the blade is in the diverted position. The seals are located at the top, sides, and bottom of the blade. Blade seals are selected according to the material being handled and are available to suit any application.

MODELS AVAILABLE

The Flat Blade Offset Diverter Valve is configured to direct the product flow straight through or to one side of the diverter. Typical product outlet offsets are 30 or 45 degrees off center. One blade and actuator is used on this diverter valve.

Flat Blade Symmetrical Diverter Valves have two product outlets, each 30 or 45 degrees off center. One blade and actuator is used on this diverter valve.

The Flat Blade Triverter Valve has one inlet and three outlets. The two side product outlets are 30 or 45 degrees off the center outlet. Two blades and actuators are used on this valve.

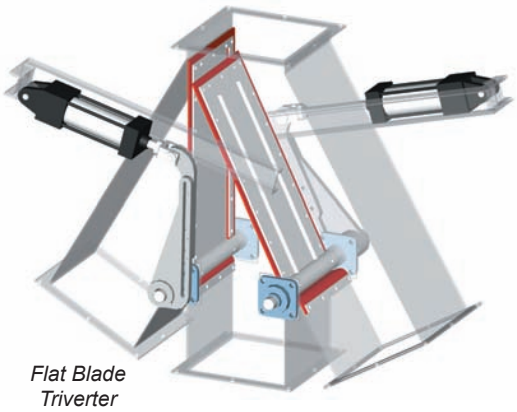

Flat Blade Triverter

P.O. Box 125
08660 Ance Road

Dust Control and Loading Systems Inc
Charlevoix, Michigan 49720
www.dclinc.com or info@dclinc.com

Tele: 800-748-0563
Fax: 231-547-3343

Solaris Oilfield, Ex. 1127, p. 20
Solaris Oilfield v. Masaba, IPR2024-01179

Dust Control and Loading Systems Inc

Curved Blade Diverter Valve

CURVED BLADE DIVERTER VALVE

DCL's Model Curved Blade Diverter Valves are designed to direct and cut off product flow from outlets of storage bins, silos, conveyors, gravity flow chutes and other discharge points handling dry bulk materials.

These rugged heavy duty curved blade diverters are available in 30 and 45 degree symmetrical configurations. Standard sizes range from 6 inches to 36 inches square. Sizes larger than 36 inches, rectangular, and special configurations including hardened liners are available on a custom build basis.

A choice of construction materials allow handling of all types of products; fine, granular, abrasive, corrosive, and sanitary applications.

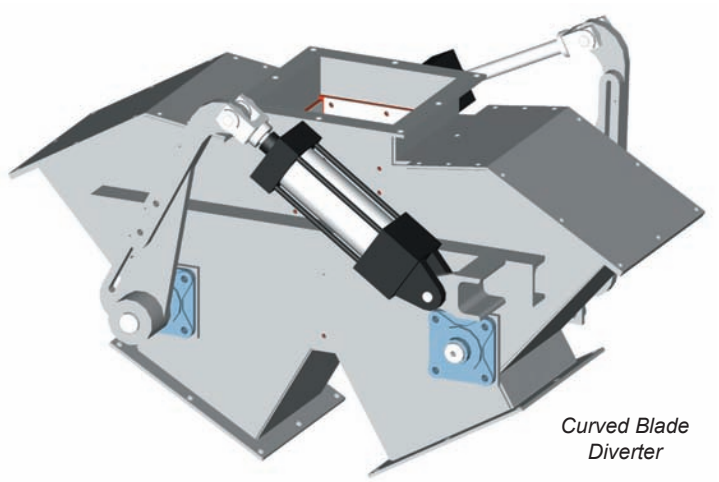

Curved Blade Diverter

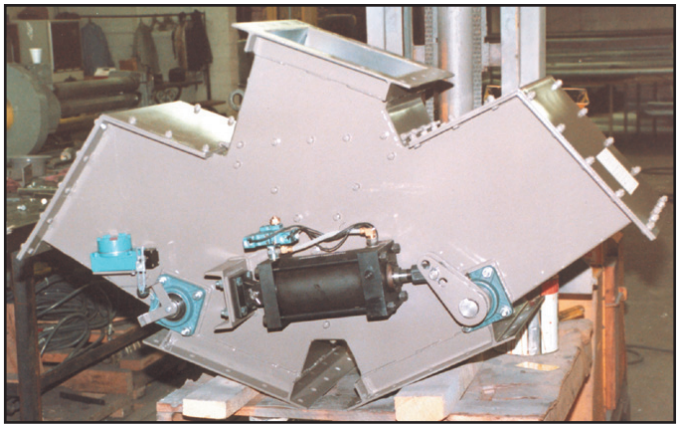

FEATURES

The Curved Blade Diverter Valves are fast acting, tight sealing, and very effective for regulating flow rates. The diverter configuration will allow not only a selection of flow to one or both legs at the same time, but will also act as a complete shut off valve. The curved blade valve should only be used when handling fine or granular materials and not materials containing a large percentage of lumps.

The CBD housing is constructed of plate steel with cross member supports on larger sizes. Each reinforced curved blade pivots on two flanged bearings allowing it to open and close with ease. Actuation of Curved Blade Diverter Valves can be accomplished in many ways; pneumatically for fast action, hydraulically for power, electrically for precise positioning, and manually with a chain wheel or lever.

The seals on the Curved Blade Diverter are designed to eliminate product leakage when the blade is in the shut off position. The seals are mounted to the housing instead of the blade allowing for easy access and replacement. Blade seals are selected according to the material being handled and are available to suit any application.

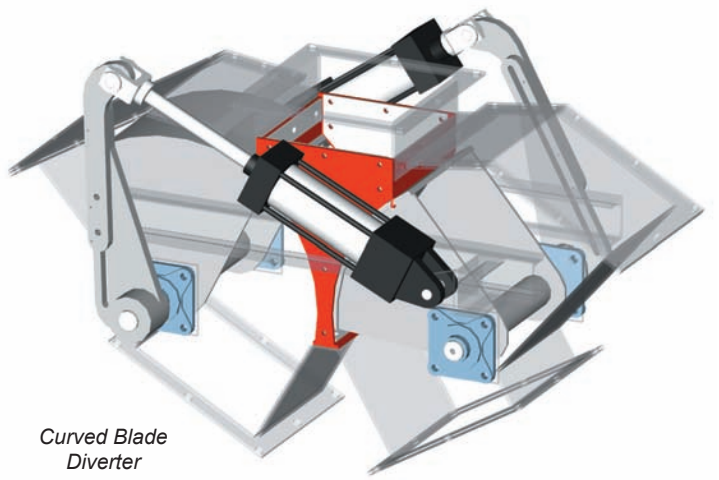

Curved Blade Diverter

P.O. Box 125
08660 Ance Road

Dust Control and Loading Systems Inc
Charlevoix, Michigan 49720
www.dclinc.com or info@dclinc.com

Tele: 800-748-0563
Fax: 231-547-3343

Solaris Oilfield, Ex. 1127, p. 21
Solaris Oilfield v. Masaba, IPR2024-01179

Dust Control and Loading Systems Inc

Compact Filter Module

APPLICATION

The Compact Filter Module is ideal for use inline at any bulk material transfer point requiring dust control. It's low profile configuration also makes the CFM the best choice for inline filteration when intergraded with a DCL Loading Spout. The flow tube can be eliminated making this unit suitable as a bin vent for any tight headroom conditions.

When used as an inline filter, product flows through a central flow tube while isolated from the upward dust entrained airflow. The collected dust is deposited back to the material being handled making the Compact Filter Module an ideal cost effective package especially when compared to a free standing dust collector utilizing duct work, discharge air lock, and often a means to convey the dust back to the system.

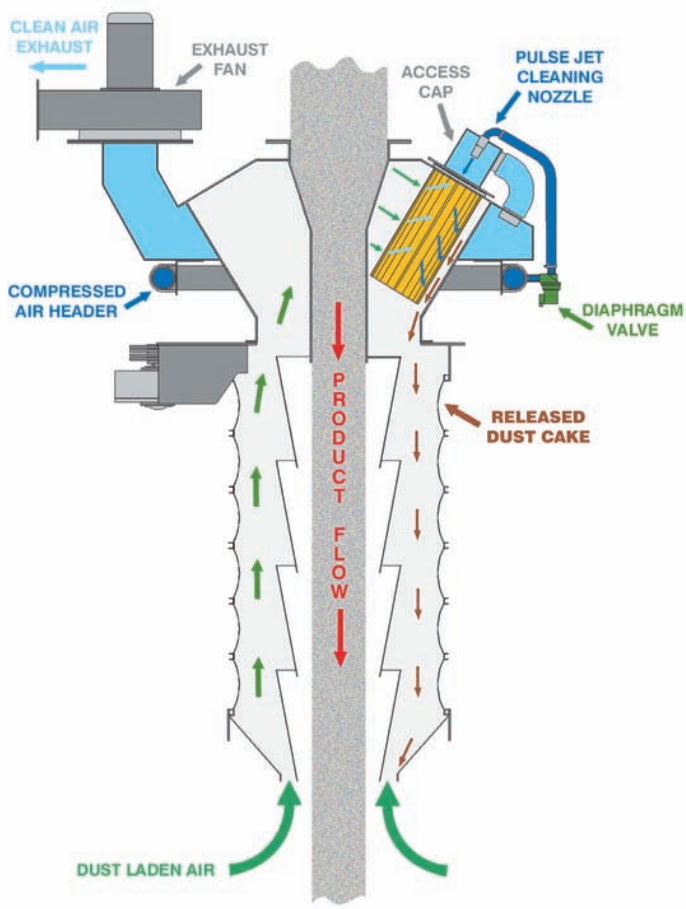

FEATURES

The exhaust fan can be directly mounted to the assembly eliminating the need for a remote fan placement. The unique design provides internal velocities that are lower than what is normally expected from conventional designs resulting in less load on the filtration media. The filter elements are automatically cleaned during operation with a conventional 80 PSI pulse jet system. The unit can be provided with a final clean feature that is activated at the end of each loading cycle fully cleaning all elements, eliminating residuals.

P.O. Box 125
08660 Ance Road

Dust Control and Loading Systems Inc
Charlevoix, Michigan 49720
www.dclinc.com or info@dclinc.com

Tele: 800-748-0563
Fax: 231-547-3343

Solaris Oilfield, Ex. 1127, p. 22
Solaris Oilfield v. Masaba, IPR2024-01179

Dust Control and Loading Systems Inc

Ventilation Module

VENTILATION MODULE

The Ventilation Module is an excellent choice for dust control when used directly at the source. This includes conveyor head chutes, ventilation of enclosed conveyors, screeners, mixers, silos, and batching bins. The special designed pleated filter elements are sized to be easily handled and are replaced without tools.

The dust that is collected by the VMV is deposited back to the material being handled. The Ventilation Module is an ideal cost effective package especially when compared to a free standing dust collector utilizing duct work, discharge air lock, and often a means to convey the dust back to the system.

FEATURES

The exhaust fan, up to 6000 CFM is directly mounted to the assembly eliminating the need for a remote fan placement. The unique design provides internal velocities that are lower than what is normally expected from conventional designs resulting in less load on the filtration media. The filter elements are automatically cleaned during operation with a conventional 80-100 PSI pulse jet system. The unit can be provided with a final clean feature that is activated at the end of each loading cycle fully cleaning all elements, eliminating residuals.

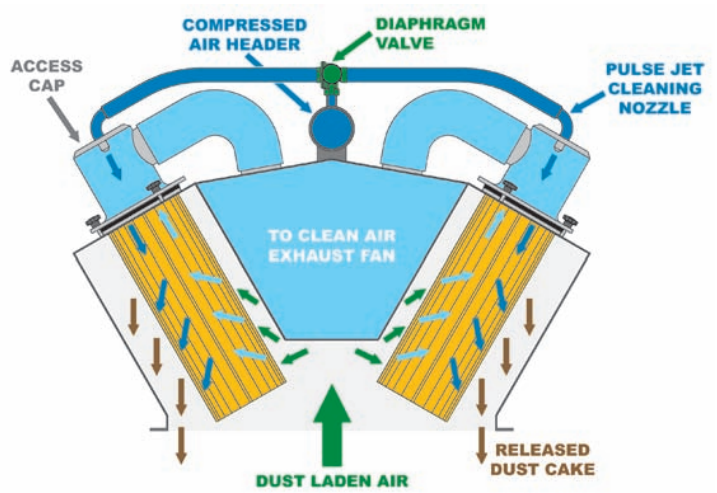

Ventilation Modules can be designed for many applications.

P.O. Box 125
08660 Ance Road

Dust Control and Loading Systems Inc
Charlevoix, Michigan 49720
www.dclinc.com or info@dclinc.com

Tele: 800-748-0563
Fax: 231-547-3343

Solaris Oilfield, Ex. 1127, p. 23
Solaris Oilfield v. Masaba, IPR2024-01179

Dust Control and Loading Systems Inc

Dust Collector & Bin Vent

DC DUST COLLECTOR

Dust collectors are typically installed at a remote location with duct work feeding to it from multiple bulk material transfer points requiring dust control. Some of the dust collector options include; platforms, railing, ladders, multiple access ports and doors.

All dust collectors are offered in top and bottom filter removal designs as well as walk in clean air plenums. Exhaust fans can be mounted to the dust collector or next to it. A wide variety of filter media choices are available to suit most dry particle filtering requirements.

Bin vent with walk in clean air plenum.

Dust collector with access platform and safety hand rail.

BV BIN VENT

Bin vents are similiar in design to dust collectors, except they do not have a collection hopper mounted to the bottom of the unit. Bin vents are typically installed on top of storage silos. They are typically used to vent storage silos, but can also accept remote duct work. Some of the bin vent options include; platforms, railing, ladders, multiple access ports and doors.

All bin vents are offered in top and bottom filter removal designs as well as walk in clean air plenums. Exhaust fans can be mounted to the bin vent or next to it. A wide variety of filter media choices are available to suit most dry particle filtering requirements.

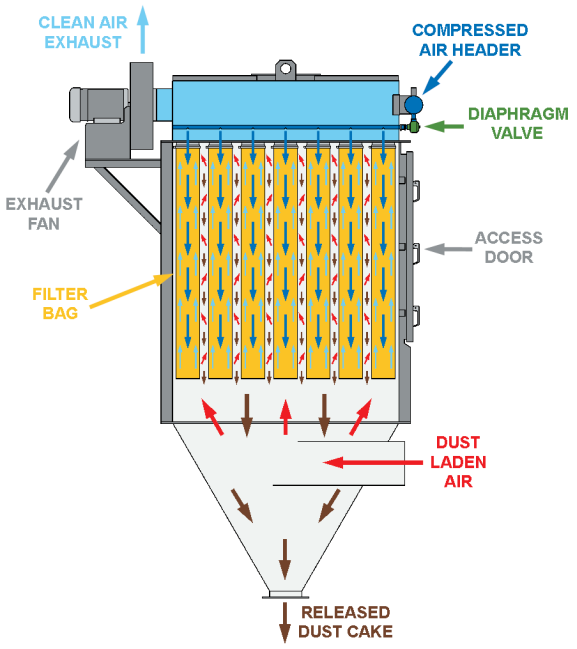

FEATURES

DCL offers a large selection of dust collectors and bin vents with up to 3000 square feet of filter media. Exhaust fans can be sized up to 18000 CFM.

A choice of construction materials allow handling of all types of products; fine, granular, lumpy, abrasive, corrosive, and sanitary applications. A choice of electrical options are also available allowing for installation in almost any environment; NEMA 4, NEMA 4X, NEMA 7, NEMA 9, 120V/220V control, 460V/415V power, etc.

P.O. Box 125
08660 Ance Road

Dust Control and Loading Systems Inc
Charlevoix, Michigan 49720
www.dclinc.com or info@dclinc.com

Tele: 800-748-0563
Fax: 231-547-3343

Bag Fill Station

BAG FILL STATION

DCL's dust free bulk bag filling stations are provided in configurations tailored for a specific bag and are designed to accommodate a full range of bag sizes. The systems use high accuracy scales with manual sequence or PLC controls. The bag fill station comes in two typical designs, a two post and four post.

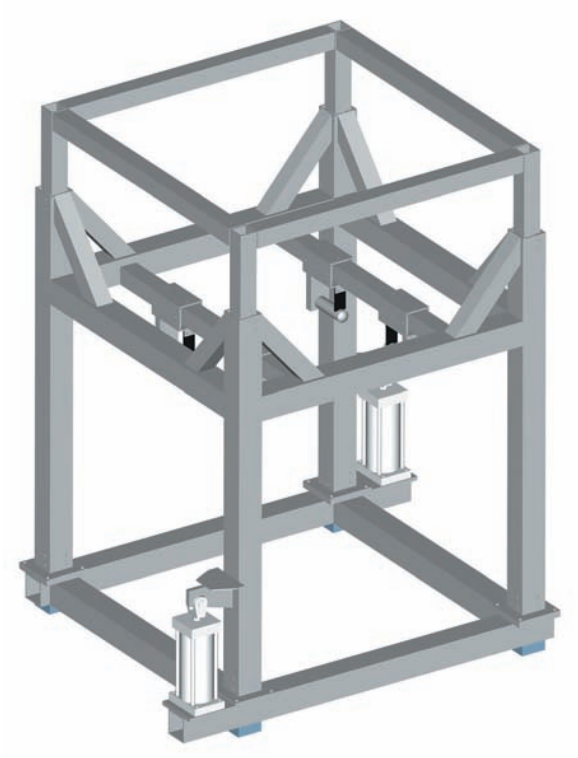

A wide variety of options allow for manual or fully automatic operation. Bag filling options include; automatic strap release, powered and gravity, roller conveyors, empty pallet dispenser, full and dribble feed product flow control valve, drum and box filling adapters with simultaneous weighing and densifying and integral filters.

DCL offers a wide variety of bag fill stations that can handle bags from 25 to 60 cubic square feet.

A choice of construction materials allow handling of all types of products; fine, granular, lumpy, abrasive, corrosive, and sanitary applications. A choice of electrical options are also available allowing for installation in almost any environment; NEMA 4, NEMA 4X, NEMA 7, NEMA 9, 120V/220V control, 460V/415V power, etc.

BAG FILL NECK

Bag filling necks are typically used in conjunction with a bag filling station. The bag is sealed around the bag filling neck and the bladder on the BFN is then inflated allowing for a complete dust tight seal. The bag filling neck dust outlet must be ducted to a dust collector in order to pull the air and dust from the bag.

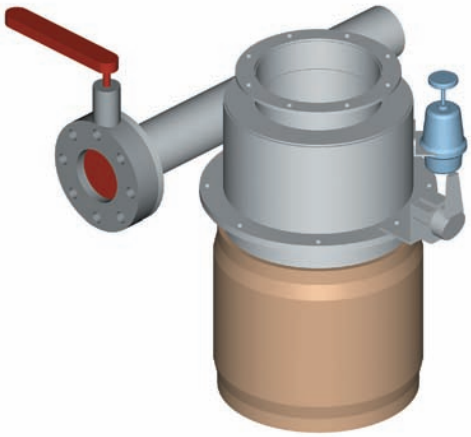

A choice of construction materials allow handling of all types of products; fine, granular, lumpy, abrasive, corrosive, and sanitary applications. A choice of electrical options are also available allowing for installation in almost any environment; NEMA 4, NEMA 4X, NEMA 7, NEMA 9, 120V/220V control, 460V/415V power, etc.

P.O. Box 125
08660 Ance Road

Dust Control and Loading Systems Inc
Charlevoix, Michigan 49720
www.dclinc.com or info@dclinc.com

Tele: 800-748-0563
Fax: 231-547-3343

Solaris Oilfield, Ex. 1127, p. 25
Solaris Oilfield v. Masaba, IPR2024-01179

System Controls

PUSH BUTTON CONTROL PANELS

Push button control panels from small two button spout control to sloped top enclosures for complete loadout system control. Push button pendants, wireless or conventional hard wired with 20' of SO cord.

PLC CONTROL PANELS

PLC (Programmable Logic Control) panels sized to match the system providing less field wiring and improved maintenance and trouble shooting ability. VPN (Virtual Private Network) connection can be added to a PLC system to allow DCL to remotely access and troubleshoot, allowing DCL the ability to make PLC changes remotely and diagnose and possibly fix a problem without having to send a field technician.

HUMAN MACHINE INTERFACE CONTROL

HMI (Human Machine Interface) provides all the function of conventional push button control plus allows for graphic viewing of the system in operation. Also provides greater alarm indication and data logging for scheduling preventive maintenance.

CLOSED CIRCUIT CAMERA CONTROL

CCC (Closed Circuit Camera) system includes required camera(s) and viewing monitor to allow a truck driver to align their truck hatch with the loading spout as they drive into the loadout station.

MOTOR STARTER PANELS

Motor starter panels, either stand alone or incorporated with the push button control panel or PLC panel, providing motor control for all of the systems three phase motors.

LOADOUT AUTOMATION

The SmartLoader vision system is at the center of our recommended plant loadout automation system design. The SmartLoader Vision is a PC based system which can be integrated with bucket elevators, silo volume, flow control, truck scales, and the plant billing system. This allows for a truck driver to never leave his truck and drive away with a receipt in hand.

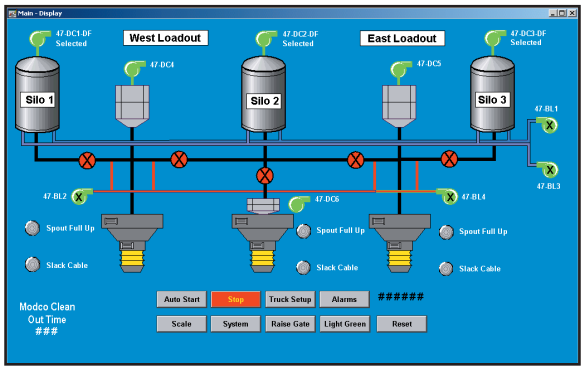

P.O. Box 125
08660 Ance Road

Dust Control and Loading Systems Inc
Charlevoix, Michigan 49720
www.dclinc.com or info@dclinc.com

Tele: 800-748-0563
Fax: 231-547-3343

Solaris Oilfield, Ex. 1127, p. 26
Solaris Oilfield v. Masaba, IPR2024-01179

Dust Control and Loading Systems Inc

SmartLoader Vision System

OVERVIEW

DCL is proud to announce its fully automatic, unattended bulk loading station for high speed filling of dry, dusty materials into enclosed vehicles.

The SmartLoader utilizes a patented vision system that scans the top of the vehicle. Any open hatch or series of open hatches are automatically located, measured, and qualified. The multi-speed positioner provides a fast scanning speed to minimize loading cycle times.

A unique articulating positioning arm is used to move the loading spout within a designed loading area. Dual direction positioners can also be utilized to keep costs down when similar truck trailers are being used in the same load out station.

Articulating arm positioning system.

SMARTLOADER VISION SYSTEM

Fully automatic, unattended loading is accomplished by using the SmartLoader Vision System. The development of this system represents the final link to truly automatic loading. The top of the truck is scanned as the truck enters the station. As the open hatch is detected, a traffic light signals the driver to stop. The vision system then takes the final hatch coordinates and adjusts the loading spout positioner centering the spout to the hatch. The spout is then lowered into the hatch once the scale has captured the vehicle tare weight. When the filling cycle is complete, the spout raises. The traffic signal and exit gate then allow the driver to exit the station.

Dual direction positioning system.

The Smart Loader Vision technology requires that the loading station be enclosed with no possibility of sunlight illuminating the vehicle either by direct sunlight or reflected sunlight. Past system performance has shown that the Vision system is capable of identifying 98 percent of hatches found on common bulk hauling trucks. Some error can be attributed to the driver's inability to understand the system operation. The user is responsible for notifying truck drivers of the new system operation, written driver instruction or instructional signs outside of the loading station. The system controls and operation scheme must accommodate manual intervention on occasion due to driver error or system malfunction. The manual operating scheme can include driver or plant personnel intervention.

The Loading Spout, Positioner and Vision System are shipped assembled in a steel cradle pre-wired to a positioner frame mounted control panel containing spout and positioner motor controls and PLC. A single Ethernet connection is required from the equipment mounted control panel to the host control system in the control room.

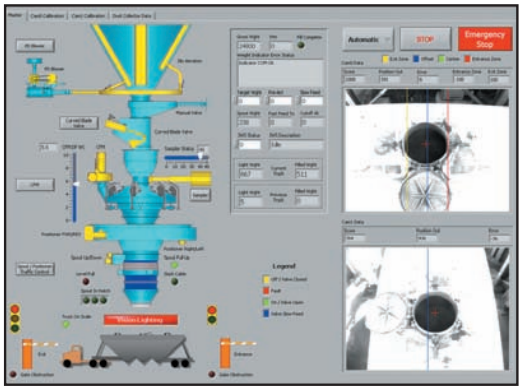

PC display interface for dual direction positioning system utilizing SmartLoader Vision System.

Factory testing is conducted prior to shipping to check out all electrical components and to preset all limit switches. This procedure greatly reduces the amount of wiring and set up required in the field. Factory technicians need only deal with Vision calibration and handshake requirements with the host system.

For more detailed application information please see "Case History: Technology Breakthrough Fully Automated Loadout Terminal" DCL publication PUBc-0609-CH03.

Po Box 125
08660 Ance Road

Dust Control and Loading Systems Inc
Charlevoix, Michigan 49720
www.dclinc.com or info@dclinc.com

Tele: 800-748-0563
Fax: 231-547-3343

Solaris Oilfield, Ex. 1127, p. 27
Solaris Oilfield v. Masaba, IPR2024-01179

CALIFORNIA PORTLAND CEMENT CASE HISTORY

Southern Nevada is one of the fastest growing areas in the United States and is expected to grow for the next 20 years. In response, California Portland Cement has constructed a transfer terminal in the city of North Las Vegas capable of transferring 500,000 tons of cement per year to the Nevada market. The terminal is designed to off load 100 ton railcars at a rate of 200 tons per hour into three 1200 ton steel silos using a pneumatic conveyor system. A dedicated double rail spur will accommodate up to 30 railcars by simply feeding cars from one spur to the other. Three silos permit the handling of more than one product and three adjustable loading spouts accommodate a variety of truck configurations. The city of North Las Vegas, surrounding landowners, and developers required that the terminal height be minimized to mitigate the visual impact of the terminal on other developments. A maximum overall height of 62 feet was considered acceptable. The terminal configuration is designed to blend with the surrounding land use and be aesthetically acceptable to the city and local developers.

California Portland Cement - North Las Vegas, Nevada

STORAGE SILOS

The total storage capacity of the terminal is 91,000 cubic feet. The three silos are identical in size and each have a cement capacity of 1200 tons. The center silo can discharge to either of the loading spouts and can be used for alternate products. The center silo can also be discharged to either of the loading spouts and can be used for alternate products. The center silo can also be discharged to the pneumatic conveyor to recirculate from one silo to the other. In order to accommodate the height restrictions yet accommodate the storage requirements, a 38 feet 6 inch diameter fully aerated 8 degree silo bottom is incorporated. The silo bottom is provided with aeration pads covering 90% of the surface. The pads are segmented and selectively valve controlled to the required location to limit the blower size to 600 CFM. The resultant reclaim capability is 99.6% of the stored product.

Loadout station equipped with two loading spouts and positioners.

LOADING EQUIPMENT

The cement is conveyed from the silo bin bottoms to the loading spouts by aeration conveyors. The two outboard loading spouts incorporate 2 feet by 6 feet horizontal positioners on 53 foot centers. The spouts reach truck hatches from 47 feet to 59 feet apart which satisfies most all trucks using the terminal. A third spout and 2 feet by 2 feet positioner is used in the center to accommodate triple trailer rigs. Each loading point is provided with an integral dust collector eliminating the need for duct and maintenance associated with a remotely mounted dust collector. A 130 foot long above ground scale is supplied as two independent platforms allowing the simultaneous loading of each trailer reducing the loading time. Dual trailer 120,000 LB Nevada rigs are loaded in 5 minutes.

The loading spouts are fitted with self sealing cones which close the discharge when not seated in the hatch. The self sealing cones reduce housekeeping requirements eliminating cement dribbling from the spout when retracted.

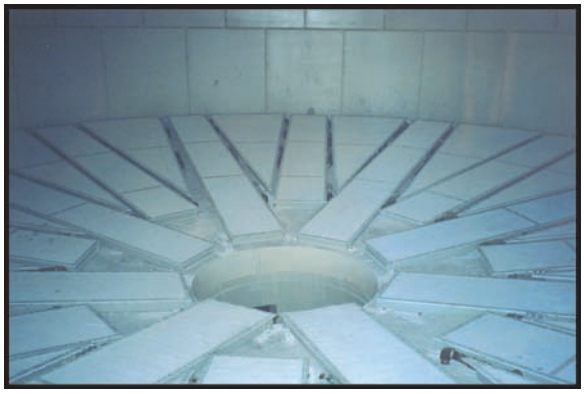

DCL's flat bottom silo aeration configuration, typical for all three silos.

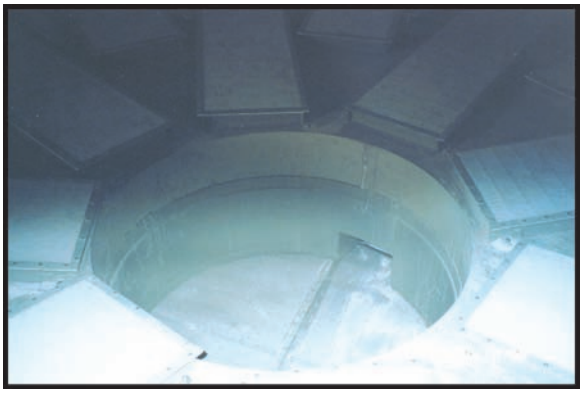

Aerated bin bottom silo discharge.

RAIL UNLOADING

One hundred ton railcars deliver cement to the terminal. The cement is unloaded through two unloading boots which seal against the rail car discharge doors. The cement is discharged into two inclined drag conveyors and conveyed to a dilute phase dual pod conveying system that delivers the cement to one of the three selected silos. The pneumatic conveyor was chosen to maintain a low elevation profile on top of the silos and to allow for the future expansion of the conveying system.

CONTROLS

The control building is of a block structure and houses the managers office, operators control room, motor control center and spare parts storage with workshop. The terminal is controlled through an Allen Bradley PLC SLC 500 with a PC interface. The truck filling is PLC controlled with a manual override. The operator aligns the spouts to the hatches with the aide of video cameras. The filling as well as the silo aeration sequence is automatic once initiated through the start button. The scale is of a twin platform design allowing the filling of two trailers simultaneously reducing the filling time while maintaining control of each trailer weight. Inventory and shipping data is transmitted to CPCC offices by data line.

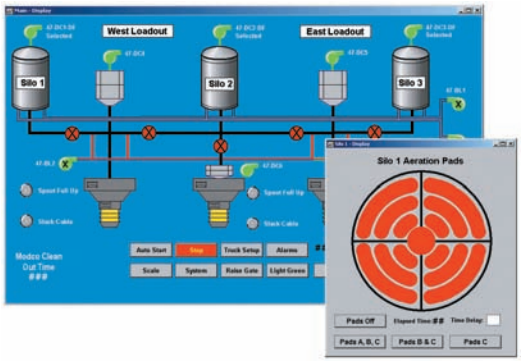

BULK LOADOUT AUTOMATION

By Lon Rice - Project Manager, Hanson Cement

Hanson Permanente Cement in Cupertino, California has successfully completed three fully automated bulk cement truck loading systems. This facility loads, hands free, between 150 to 400 trucks per 24 hour period. This new operator free system can load both semi-trucks and tandem trailers in less than 6 minutes from the start of truck entry until the truck exits the scale.

Trucks are loaded dust free at rates to 1000 TPH.

Hanson's upper management wanted to upgrade the bulk loadout to match the rest of the plant. Customer convenience and safety were the key issues in this project.

The goals were to:

- **Clean up the area** -- The area was constantly wet and muddy due to water leaks and poor drainage. There was an old lime plant in the area and the equipment obstructed traffic flow.
- **Reduce the loading time** -- The existing spout system could not be moved to reach the truck position, therefore the trucks had to move back and forth to line up with the spouts.
- **Make the system more customer friendly** -- Customers had to exit their trucks and carry the cement order up a set of stairs to the operator, loading was slow and inaccurate.
- **Increase safety** -- Keeping the drivers in their trucks would make the loading operation safer for the drivers.

Typical equipment arrangement for fully automatic loading.

The ideas were great, but there were many unknowns. So it was decided to do the work in two stages.

First Stage

- **Demolish the old plant silos.**
- **Dig up the lime plant foundations.**
- **Re-route the gas line.**
- **Repair the water leaks and remove the mud.**
- **Lay down a new asphalt staging area.**

Second Stage

- **Build a fully automatic loading system without interrupting the flow of traffic.**

This was the hard part. We knew what we wanted to do. The basic design had been drawn up and approved, but no one had built a fully automatic loadout station before. Most of the software for this endeavor had to be written specifically for the application. The Vision System used to scan the top of the trucks had not yet been adapted to a carriage and spout assembly and every truck is different. Card readers were not new, but using them to run a computer operated system was very complicated.

Versatility was a primary requirement. This system was made to accommodate any truck configuration that could fit under the holding bin and onto the scale. Load rates, quantities, and percentages are varied automatically for each truck. The system even knows if there is product remaining in the trailer from a previous load.

Driver safety being an issue in all cement plants necesitated that we build a facility that would limit the requirement for the driver to exit his truck at the weigh master's office and at the loading scales. Drivers walking around the loadout area are in danger of being hit by mobile equipment and plant equipment. RF card readers are used to allow the driver to communicate with the loadout computer. The driver need only get the card within 3 feet of the reader to activate data transfer.

Every component was designed to minimize customer waiting and loading time. Keeping the driver in his truck cuts loss of loading time due to drivers visiting when they should be loading. The spout being able to locate the trailer hatch has totally eliminated the trailer alignment time. The system was designed to place cement in the trailers as fast as air can be extracted from the cement. This appears to be at a maximum flow instantaneous rate of 1000 tons per hour. Above this flow rate the trailers tend to overflow before the full load can be placed. Before the installation 10% of the customer's trucks were over or under loaded, causing delays in loading and extra cost to the customer. After the installation, over and under loads are close to zero.

Driver never leaves his truck.

The SmartLoader being able to locate hatch openings has solved the problem of truck drivers having problems lining up with the spout. Using the articulating airslide, the spout travel dimensions could be any thing required to service our customers. In our case, the spout covers a rectangular area 35 feet by 2 feet. There is no limit to the location and/or number of hatches the system can be set to manage.

The loadout system is driver friendly. Drivers only need to know where the loadouts are located and how to use the RF cards. Everything else is automated and intuitively placed such that drivers can follow flow and get loaded without any additional assistance. First time customers are given a very short explanation by the weigh master. This has proven to be more than sufficient for the last year of operation.

Physically, the loadout systems consist of a weigh master's office, cement holding bins, truck scales, articulating airslides, dust collectors, computers and the SmartLoaders which are the heart of the system.

LOADING SEQUENCE

Lon Rice / Project Manager and Reinhard Matye / DCL President.

The loading process is as follows; customer's truck enters the plant and stops at the weigh master's drive up window. The weigh master issues the driver a RF card. The card is used by the driver to gain access to the loadout and the computers, obtain loading information from the server and to track the loading operation. The driver proceeds to the appropriate loadout where, without exiting his truck, he flashes the card at the RF card reader. Traffic lights guide the truck onto the scale. Once the truck is in place, DCL's patented Smart Spout Vision System scans the top of the vehicle locating valid open hatches and automatically places the spout in the trailer's first open hatch. The fully automated on-scale loadout system feeds weight data to the host control system for cement flow modulation. When the first hatch is full the spout automatically moves to the second and third hatches filling them in the same manner. When the filling of the trailers is complete, traffic lights signal the trucks to exit the scale. The weight and time data are transferred electronically to the weigh master's office. When the customer reaches the weigh master's office, he places the RF card in a slot and the computer prints out the BOL to the driver. Daily sales data is forwarded to our main frame computer each night via modem.

There were a number of contractors and vendors involved in the design and supply of the equipment used in this project.

Bentley Engineering ..... Civil, structural, mechanical design and construction management.
DCL, Inc..... Cement handling equipment and SmartLoader System.
Engineering Systems, Inc..... Electrical design.
Engineering Systems Integration, Inc..... Software and computers.
Pacific Processing ..... Civil, structural and mechanical installation.
Contra Costa Electric..... Electrical installation.
JWS ..... Ticketing and data transfer software.

Solaris Oilfield, Ex. 1127, p. 31
Solaris Oilfield v. Masaba, IPR2024-01179

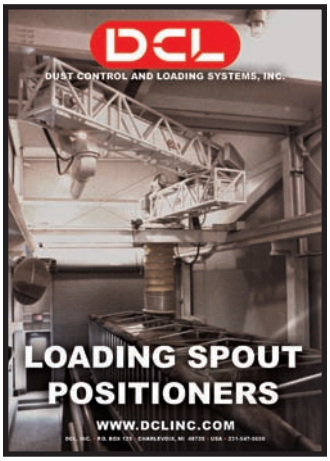
DCL
DUST CONTROL AND LOADING SYSTEMS, INC.
LOADING SPOUT POSITIONERS
WWW.DCLINC.COM

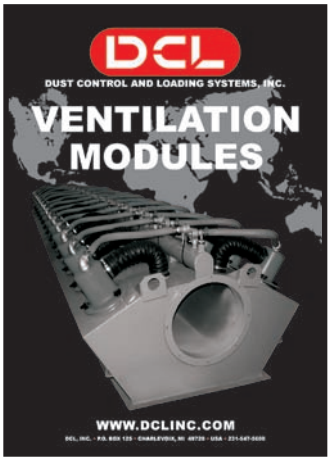
DCL
DUST CONTROL AND LOADING SYSTEMS, INC.
VENTILATION MODULES
WWW.DCLINC.COM

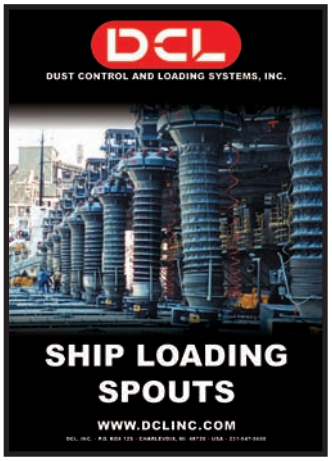
DCL
DUST CONTROL AND LOADING SYSTEMS, INC.
SHIP LOADING SPOUTS
WWW.DCLINC.COM

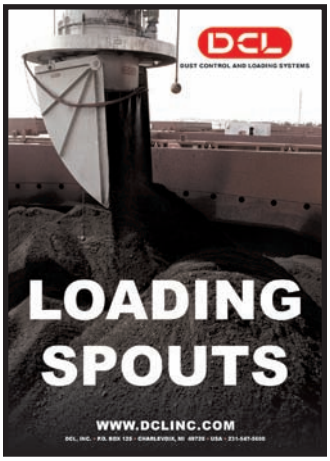
DCL
LOADING SPOUTS
WWW.DCLINC.COM

DCL
DUST CONTROL AND LOADING SYSTEMS, INC.
LOADING SPOUT AND COMPACT FILTER MODULE
WWW.DCLINC.COM

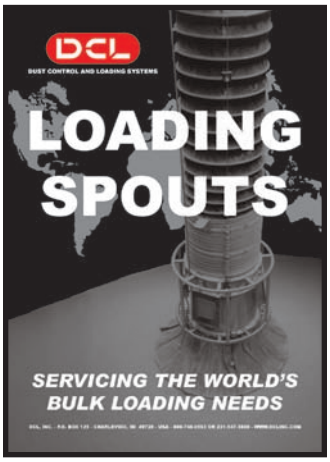
DCL
LOADING SPOUTS
SERVICING THE WORLD'S BULK LOADING NEEDS

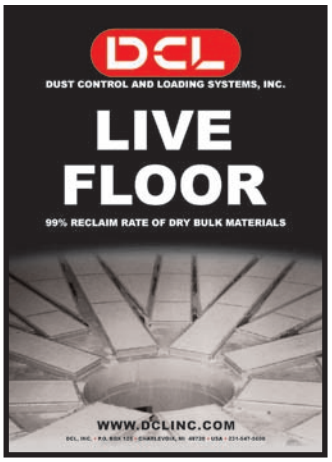
DCL
DUST CONTROL AND LOADING SYSTEMS, INC.
LIVE FLOOR
99% RECLAIM RATE OF DRY BULK MATERIALS
WWW.DCLINC.COM

DCL
DUST CONTROL AND LOADING SYSTEMS
LOADING SPOUTS
SERVICING THE WORLDS BULK LOADING NEEDS
DCL, INC. - P.O. BOX 125
CHARLEVOIX, MI 49720 - USA
800-748-0563 OR 231-547-5600
WWW.DCLINC.COM

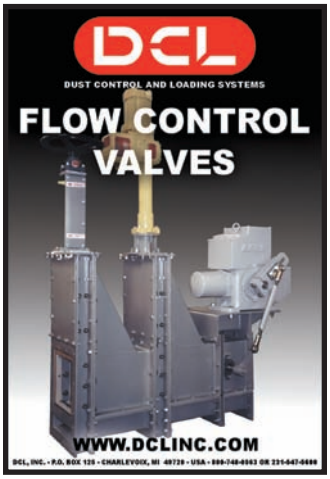
DCL
DUST CONTROL AND LOADING SYSTEMS
FLOW CONTROL VALVES
WWW.DCLINC.COM

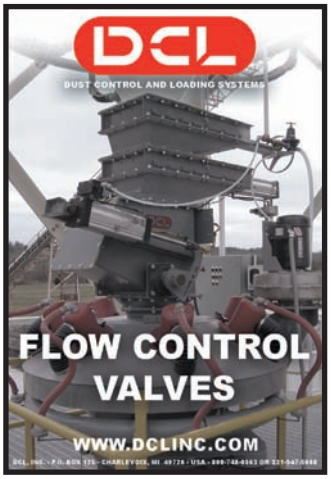
DCL
DUST CONTROL AND LOADING SYSTEMS
FLOW CONTROL VALVES
WWW.DCLINC.COM

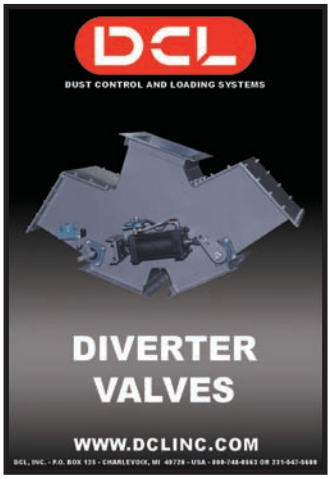
DCL
DUST CONTROL AND LOADING SYSTEMS
DIVERTER VALVES
WWW.DCLINC.COM

DCL
SMARTLOADER
STATE OF THE ART HATCH SEEKING FOR AUTOMATIC LOADING OF ENCLOSED VEHICLES
WWW.DCLINC.COM

DCL
DUST CONTROL AND LOADING SYSTEMS
SLIDE GATE VALVES
SERVICING THE WORLDS BULK LOADING NEEDS
DCL, INC. - P.O. BOX 125
CHARLEVOIX, MI 49720 - USA
800-748-0563 OR 231-547-5600
WWW.DCLINC.COM

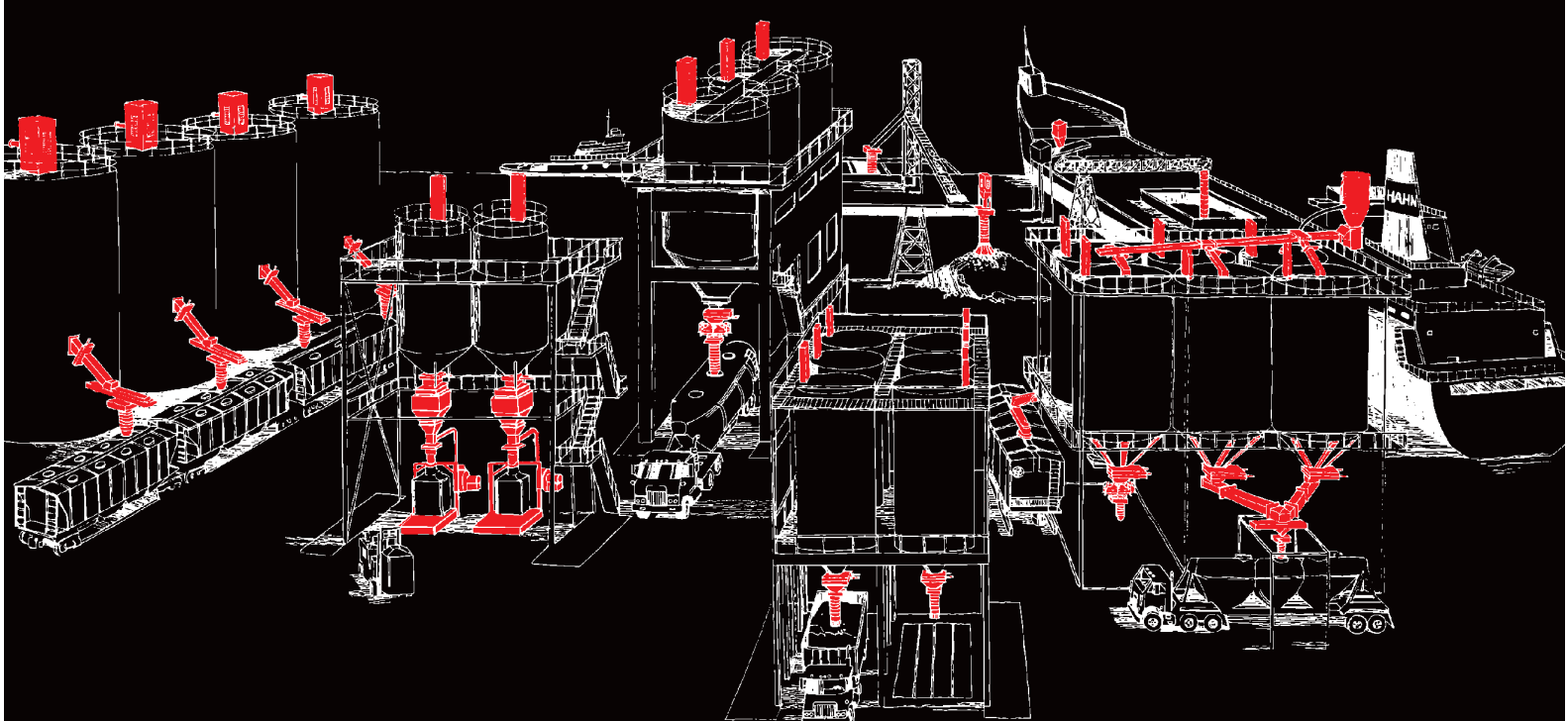

DCL, INC. • P.O. BOX 125 • CHARLEVOIX, MICHIGAN 49720 • USA
(231) 547-5600 • (800) 748-0563 • WWW.DCLINC.COM

2009