US009616799B1

(12) **United States Patent**
Smith

(10) **Patent No.: US 9,616,799 B1**
(45) **Date of Patent: Apr. 11, 2017**

(54) **PNEUMATIC TANK TRAILER**

(71) Applicant: **Racehorse Investments, L.L.C.**, East St. Louis, IL (US)

(72) Inventor: **David Smith**, Alpine, UT (US)

(73) Assignee: **Racehorse Investments, L.L.C.**, East St. Louis, IL (US)

(*) Notice: Subject to any disclaimer, the term of this patent is extended or adjusted under 35 U.S.C. 154(b) by 0 days.

(21) Appl. No.: **14/957,085**

(22) Filed: **Dec. 2, 2015**

Related U.S. Application Data

(63) Continuation-in-part of application No. 14/515,708, filed on Oct. 16, 2014.

(60) Provisional application No. 61/891,630, filed on Oct. 16, 2013.

(51) **Int. Cl.**
B65G 53/04 (2006.01)
B60P 3/24 (2006.01)

(52) **U.S. Cl.**
CPC ***B60P 3/243*** (2013.01)

(58) **Field of Classification Search**
CPC B60K 3/00; B60K 6/08; B60P 1/60; B65D 25/22; B65D 25/24; B65D 11/28; B65D 88/128; B65D 88/129; B65D 90/12
USPC 406/39, 40, 41, 42, 43, 44, 127, 144; 220/4.14, 564; 296/15; 410/68; D12/95; 280/836–839
See application file for complete search history.

(56) **References Cited**

U.S. PATENT DOCUMENTS

RE8,071 E 2/1878 McGarry
1,081,032 A 12/1913 Evens
2,038,265 A 4/1936 Bradley
2,086,134 A 7/1937 Ludwick
2,097,113 A 10/1937 Bradley
2,119,671 A 6/1938 Francis
2,185,030 A 12/1939 Lockwood
2,616,758 A 11/1952 Meyers
2,626,813 A 1/1953 Edward
D170,969 S 8/1953 Clough
2,689,462 A 9/1954 Brandon
2,721,006 A * 10/1955 Knutsen B65D 88/72 222/462
3,058,753 A 10/1962 Carlsen
(Continued)

FOREIGN PATENT DOCUMENTS

CA 2212020 A1 8/1997
WO 2008125863 A1 10/2008

OTHER PUBLICATIONS

U.S. Appl. No. 14/957,085, Smith, David, Joe Dillon, Jr.*
(Continued)

Primary Examiner — Joseph Dillon, Jr.
(74) *Attorney, Agent, or Firm* — Senniger Powers LLP

(57) **ABSTRACT**

A pneumatic tank trailer that is structurally reinforced in a fuel efficient manner. The trailer includes a tank defined by hoppers and tank walls. Internal frames are joined to the tank at locations where adjacent hoppers meet. The frames extend circumferentially around the tank interior. In some embodiments, the frames are multi-piece assemblies. In certain embodiments, each frame includes a cross joist portion extending between opposite tank sides at a location spaced apart from the top and bottom of the tank. In some embodiments, front and rear frames include an internal portion that extends along the sides and top of the tank and an external portion that extends underneath the tank.

20 Claims, 20 Drawing Sheets

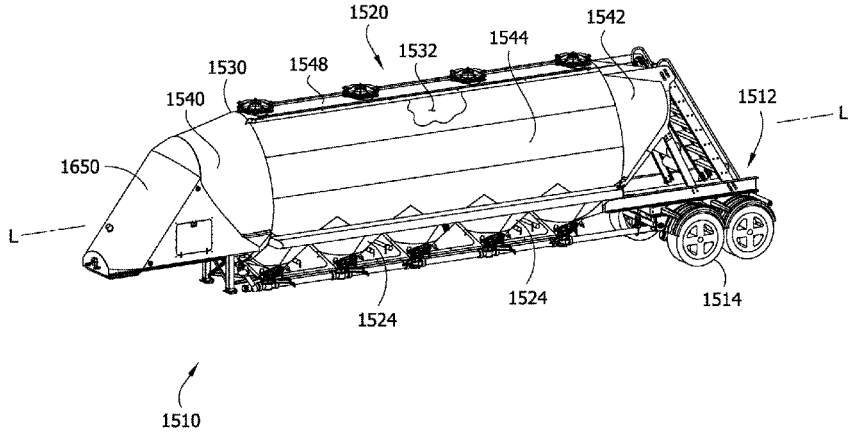

(56) **References Cited**

U.S. PATENT DOCUMENTS

3,139,286	A *	6/1964	Johnson	B60P 3/221	105/248
3,187,766	A *	6/1965	Black	B60P 3/225	137/267
3,252,431	A	5/1966	Phillips		
3,311,269	A	3/1967	Mendez		
3,325,177	A	6/1967	Arthur		
3,419,310	A	12/1968	Gramlich		
3,543,692	A	12/1970	Stark et al.		
3,679,082	A	7/1972	Gramlich		
3,883,148	A *	5/1975	Miller	B65D 88/26	105/358
3,917,084	A	11/1975	Swisher, Jr. et al.		
4,188,152	A	2/1980	Kitt		
4,230,048	A	10/1980	Gordon et al.		
4,258,953	A	3/1981	Johnson		
4,348,047	A	9/1982	Harshman		
D274,322	S	6/1984	Hayes		
4,606,570	A	8/1986	Neumann		
4,643,475	A	2/1987	Neumann		
4,729,570	A *	3/1988	Welch, Jr.	B60P 3/2225	105/358
4,741,569	A	5/1988	Sutphen		
4,818,024	A	4/1989	Michel		
4,884,923	A *	12/1989	Wellink	B65D 88/32	137/243
4,899,901	A *	2/1990	Nickel	B65D 88/54	220/647
5,064,091	A *	11/1991	Gerhard	B65D 88/128	220/1.5
5,326,156	A	7/1994	Heider et al.		
5,630,625	A *	5/1997	Shaw	B60G 11/27	180/209
RE35,580	E	8/1997	Heider et al.		
5,782,524	A	7/1998	Heider et al.		
5,819,970	A	10/1998	Solimar		
5,855,456	A *	1/1999	Mueller	B65G 53/525	406/11
5,911,337	A	6/1999	Bedeker		
6,173,991	B1	1/2001	Piona et al.		
6,196,590	B1	3/2001	Kim		
6,286,894	B1	9/2001	Kingham		
6,457,630	B1	10/2002	Nilsson		
6,666,498	B1	12/2003	Whitten		
6,948,887	B1 *	9/2005	Yielding	B60P 1/60	222/399
6,958,887	B2	10/2005	Hiraguchi		
7,108,315	B1 *	9/2006	McCloud	B60P 3/2215	280/107
D542,185	S	5/2007	Remington		
D544,815	S	6/2007	Williams		
D546,245	S	7/2007	Heard		
7,488,030	B2	2/2009	Nadeau		
7,516,908	B1 *	4/2009	Sack	A62C 3/0207	169/24
7,651,114	B2	1/2010	Weber et al.		
7,712,820	B1	5/2010	Kyle		
7,795,837	B1	9/2010	Haun et al.		
7,967,369	B2	6/2011	Davidson		
8,025,329	B1	9/2011	Kron		
8,066,318	B2	11/2011	Mazzarelli et al.		
8,082,698	B2	12/2011	Drake		
8,186,745	B2	5/2012	Graham		
D662,461	S	6/2012	Fu et al.		
8,308,213	B1	11/2012	Sharkey		
8,573,680	B2	11/2013	Smith		
D716,701	S	11/2014	Beelman, III		
9,266,459	B2 *	2/2016	Yielding	B60P 1/56	
2003/0075915	A1	4/2003	Kim		
2003/0132644	A1	7/2003	Crews		
2006/0049661	A1	3/2006	Mazzarelli et al.		
2008/0073895	A1	3/2008	Herman et al.		
2008/0190929	A1	8/2008	Gloor et al.		
2008/0211259	A1	9/2008	Nadeau		
2008/0265617	A1	10/2008	Davidson		
2009/0085394	A1	4/2009	Lemmons		
2009/0145905	A1	6/2009	Kim		
2010/0308063	A1	12/2010	Pu et al.		
2010/0320725	A1	12/2010	Thorpe, Sr.		
2011/0049207	A1	3/2011	Hufgard		
2011/0198145	A1	8/2011	Bullis		
2011/0209418	A1	9/2011	Drake		
2014/0353999	A1 *	12/2014	Yielding	B60P 1/56	296/24.3
2015/0137501	A1 *	5/2015	Kibler	B60P 3/221	280/837
2015/0314815	A9 *	11/2015	Yielding	B60P 1/56	296/24.3

OTHER PUBLICATIONS

Product News, Sep. 2013, prior Fruehof tank trailer configuration, http://www.1087vehicles.org/New%20Products/13_sep.php; printed Apr. 14, 2015.

Robert Lafrenière Truck Pictures—Bulk Hauler Trucks, four pages, last updated Feb. 28, 2014.

* cited by examiner

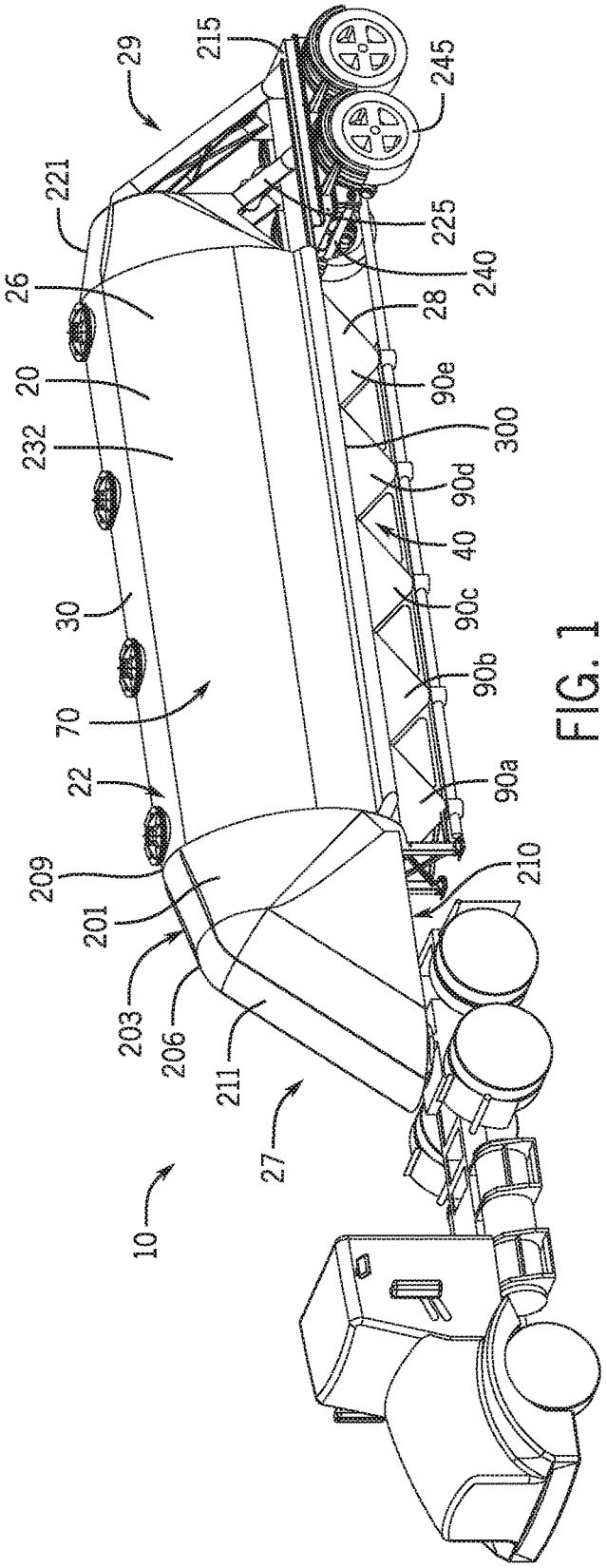
29
215
245
221
225
240
26
28
20
90e
300
232
90d
40
30
90c
90b
70
22
90a
209
210
201
203
206
211
27
10

FIG. 1

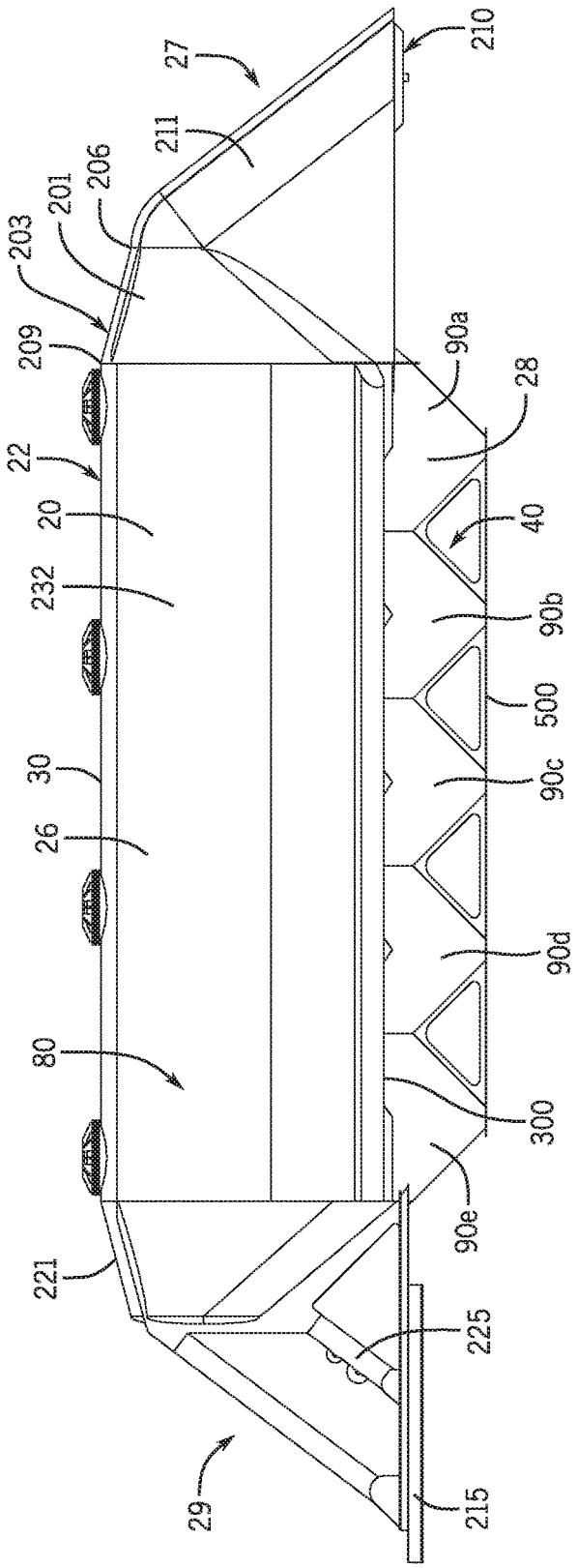
210
27
211
206
201
203
209
22
20
232
30
26
80
221
29
215
225
90e
300
90d
90c
500
90b
40
28
90a

FIG. 2

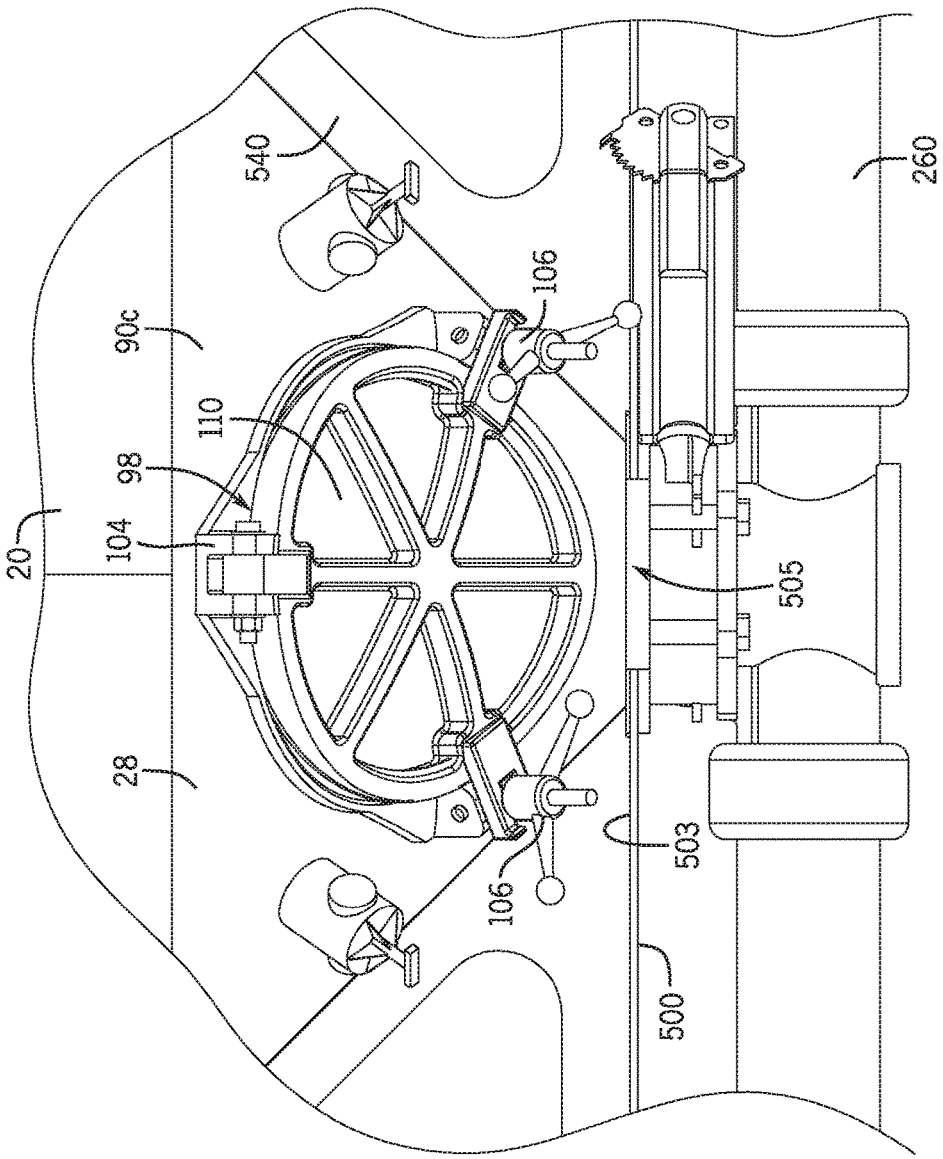

FIG. 3

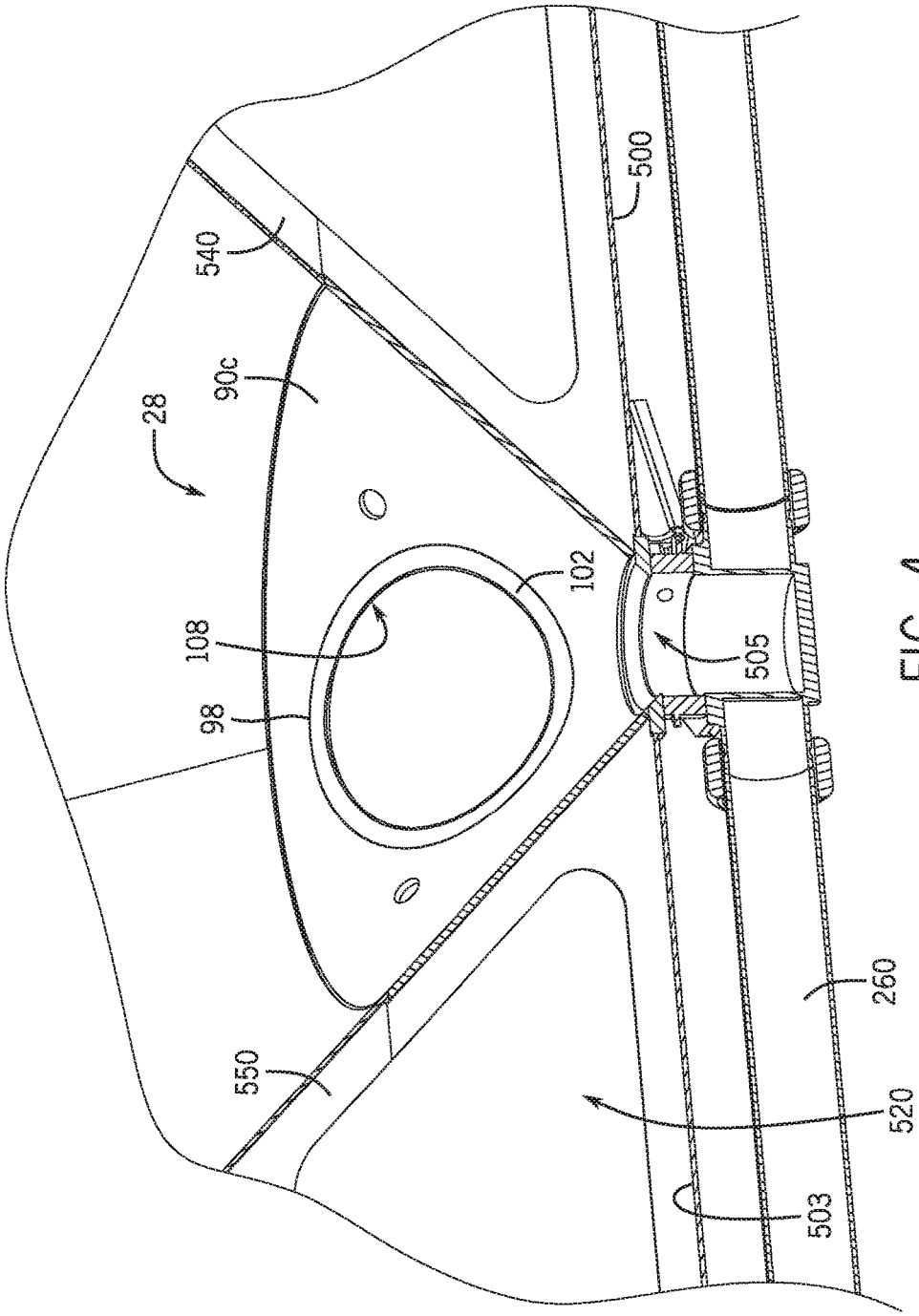

FIG. 4

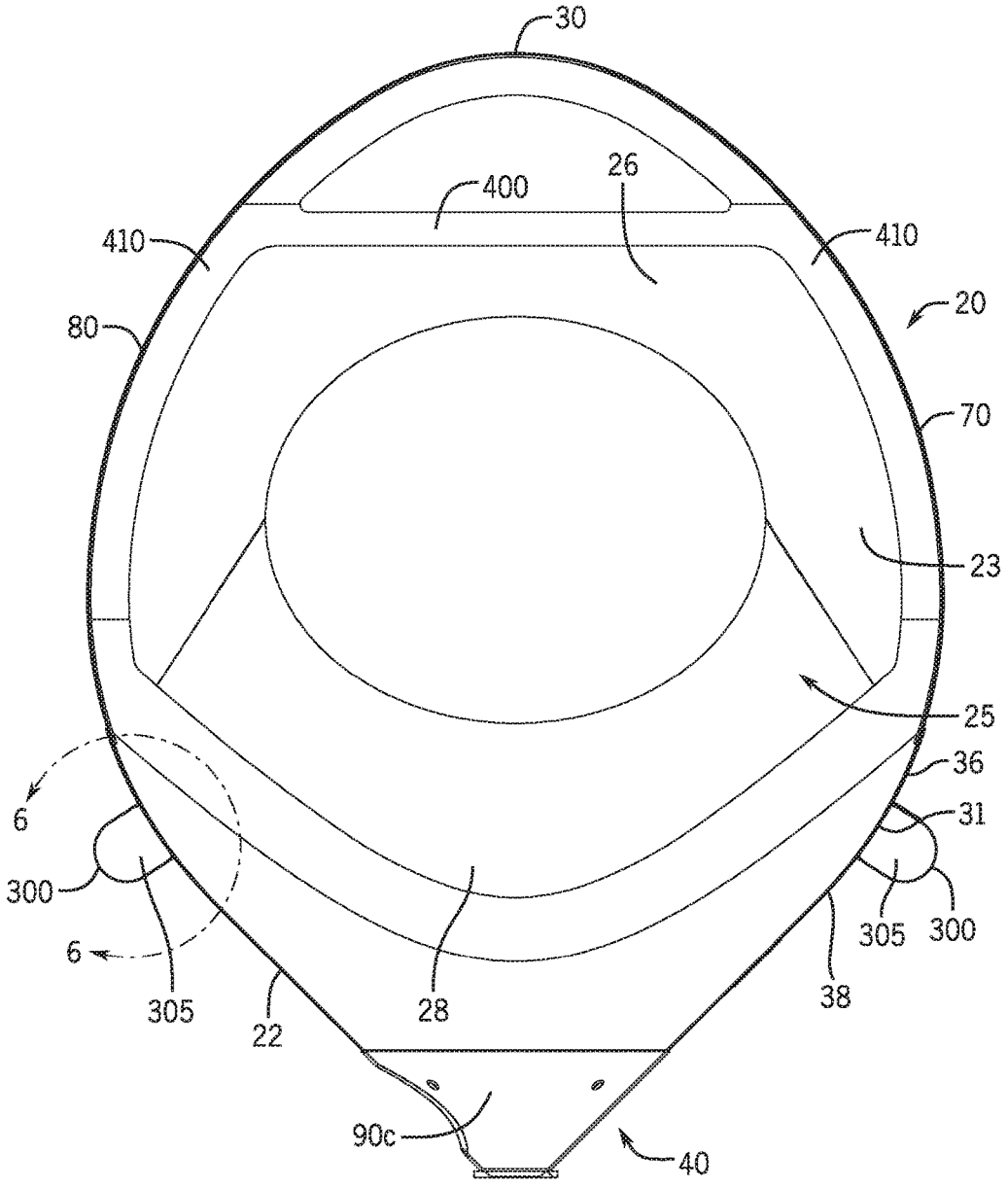
30
400
26
410
410
20
80
70
23
25
36
31
6
300
6
305
300
305
22
28
38
90c
40

FIG. 5

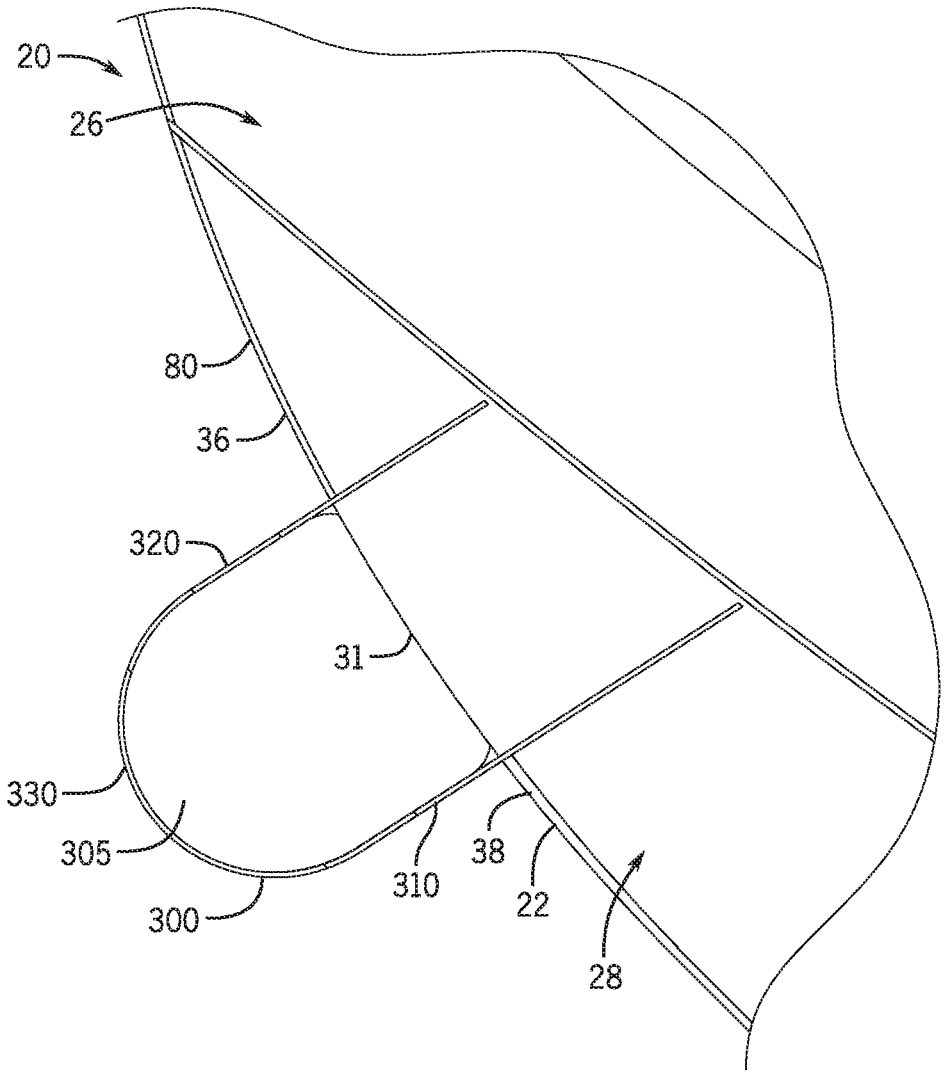

FIG. 6

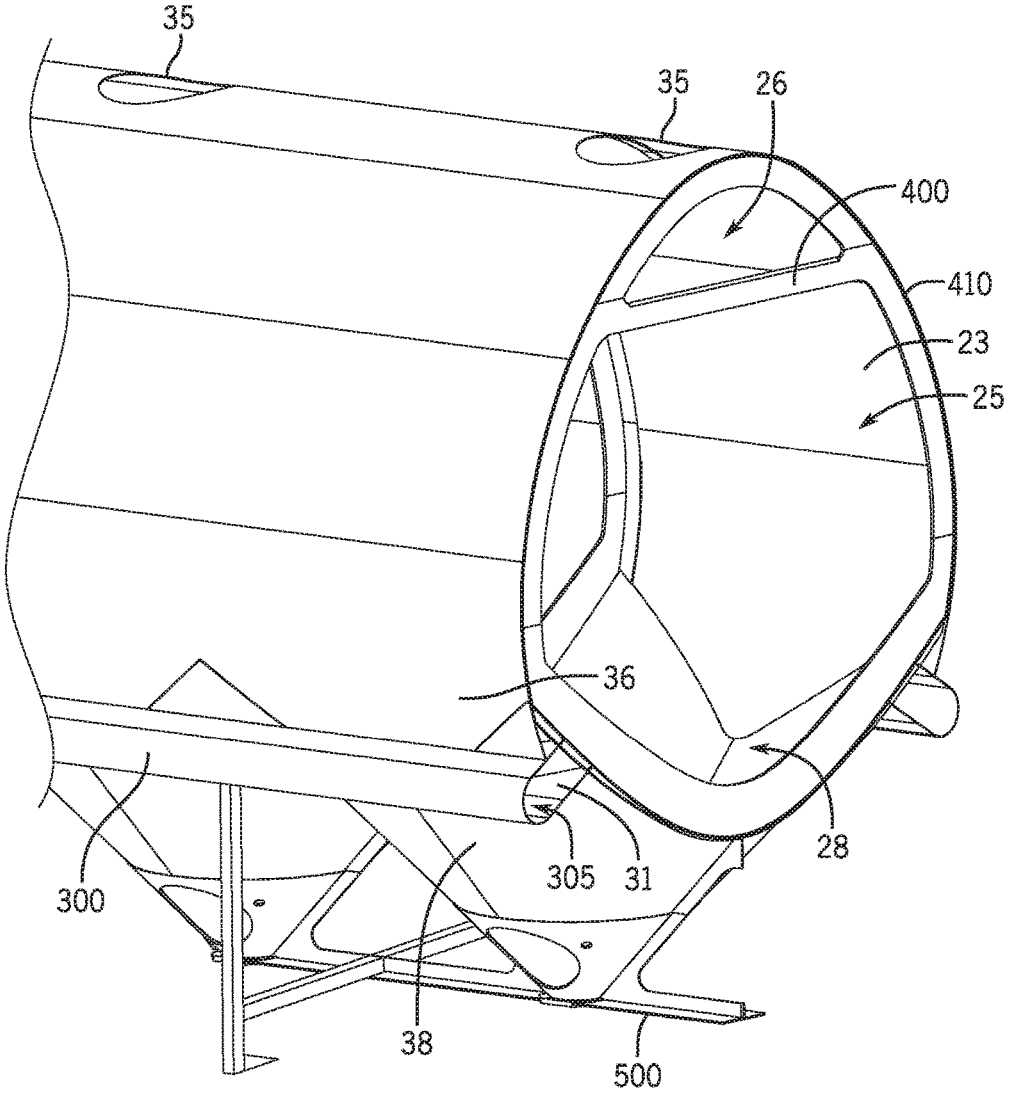

FIG. 7

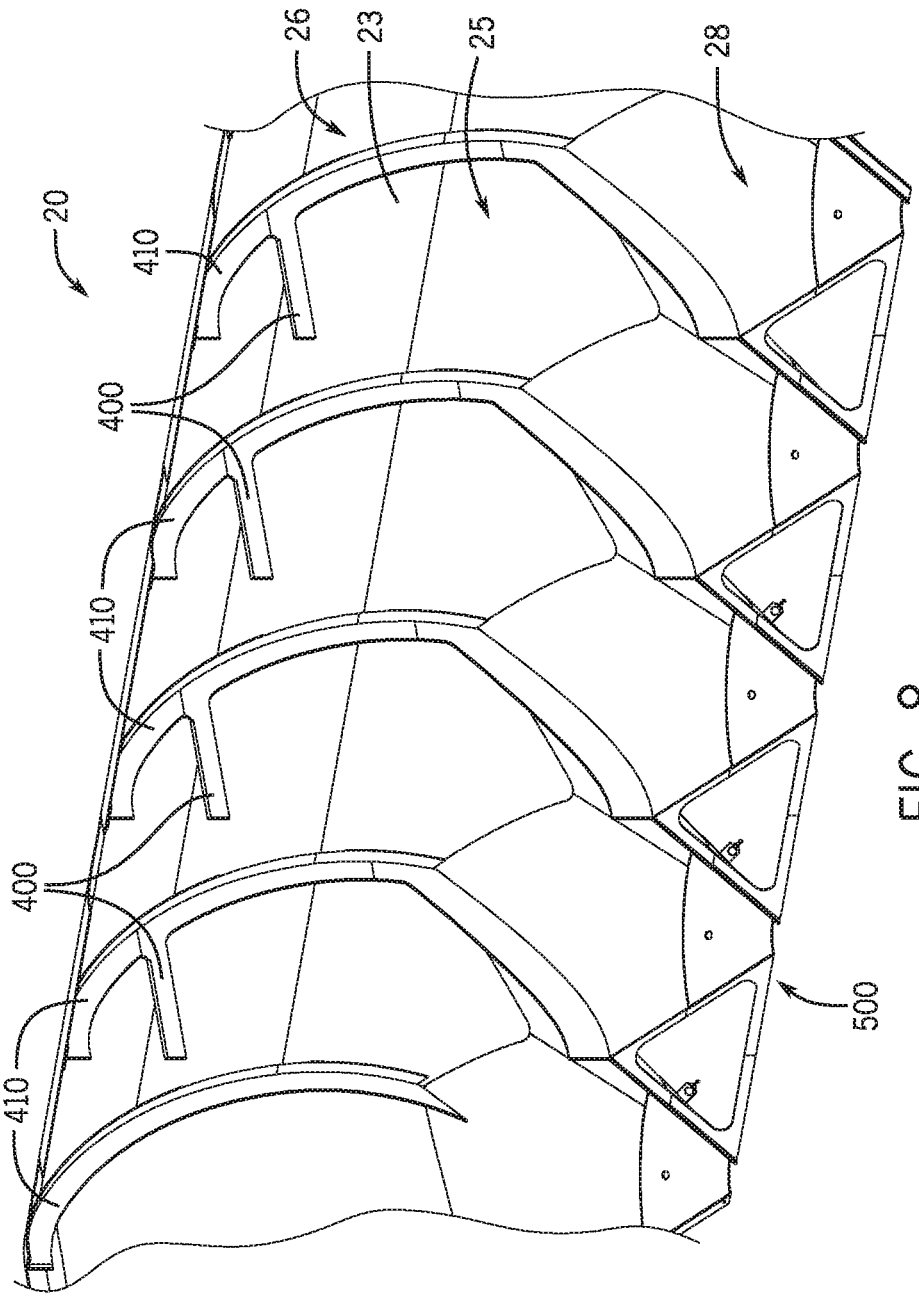

FIG. 8

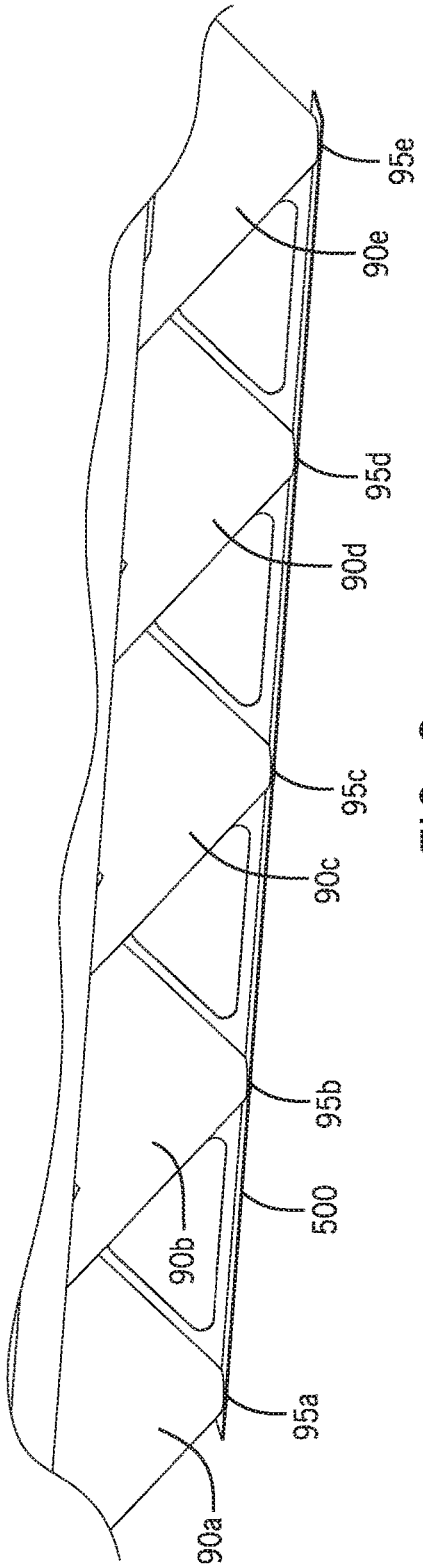
95e
90e
95d
90d
95c
90c
95b
500
90b
95a
90a

FIG. 9

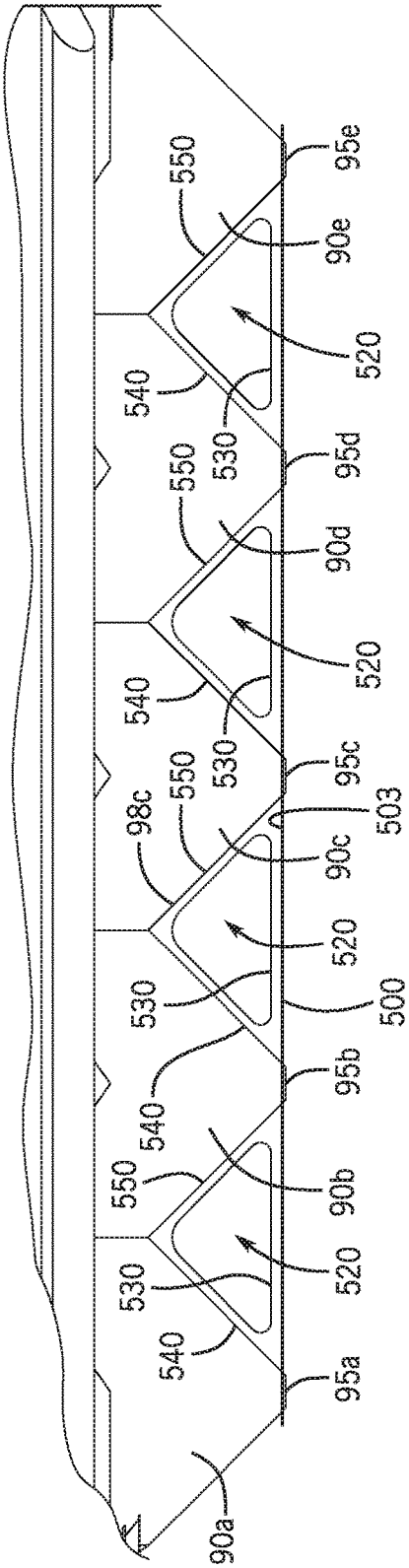
550
95e
90e
520
540
530
95d
550
90d
520
540
530
95c
503
98c
550
90c
520
530
500
95b
540
550
90b
520
530
540
95a
90a

FIG. 10

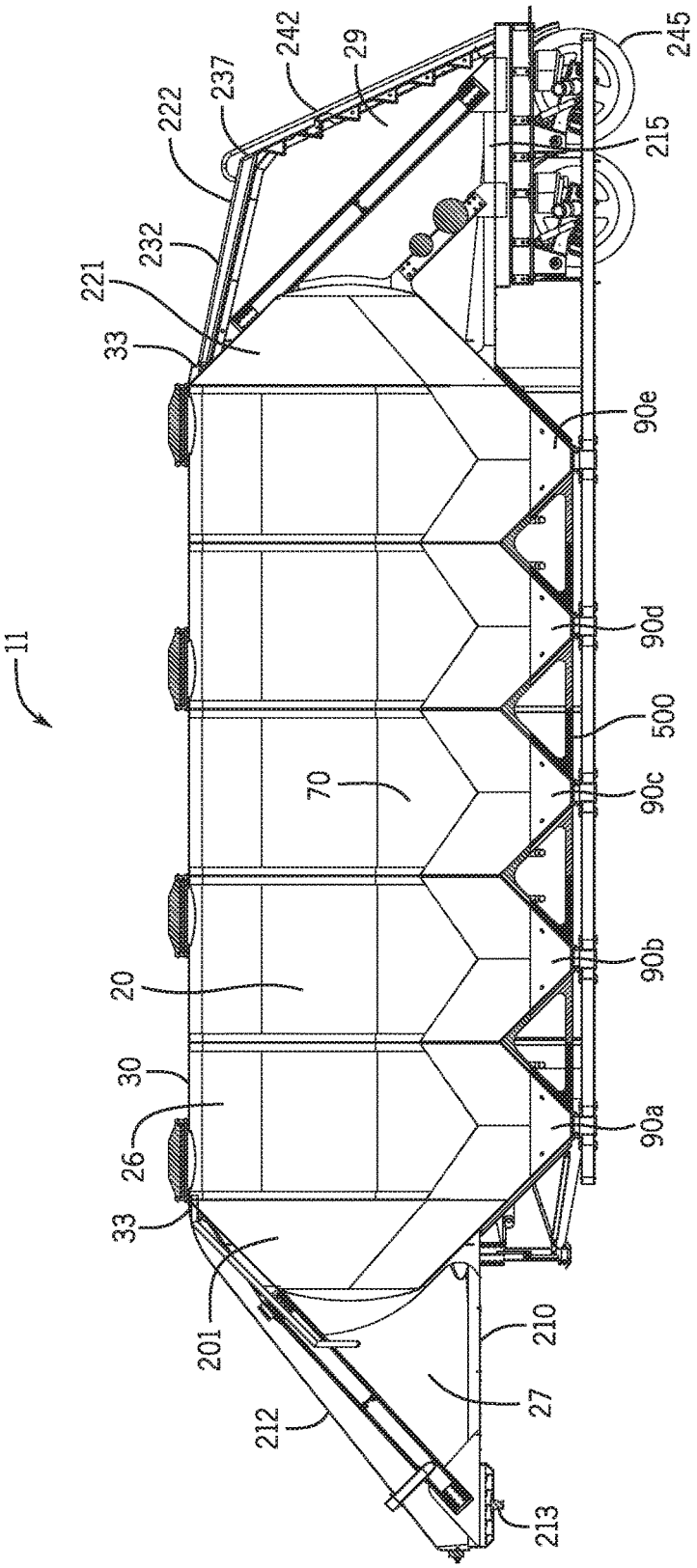
11
33
221
232
222
237
242
29
245
215
90e
90d
500
90c
90b
90a
70
20
30
26
33
201
212
210
27
213

FIG. 11

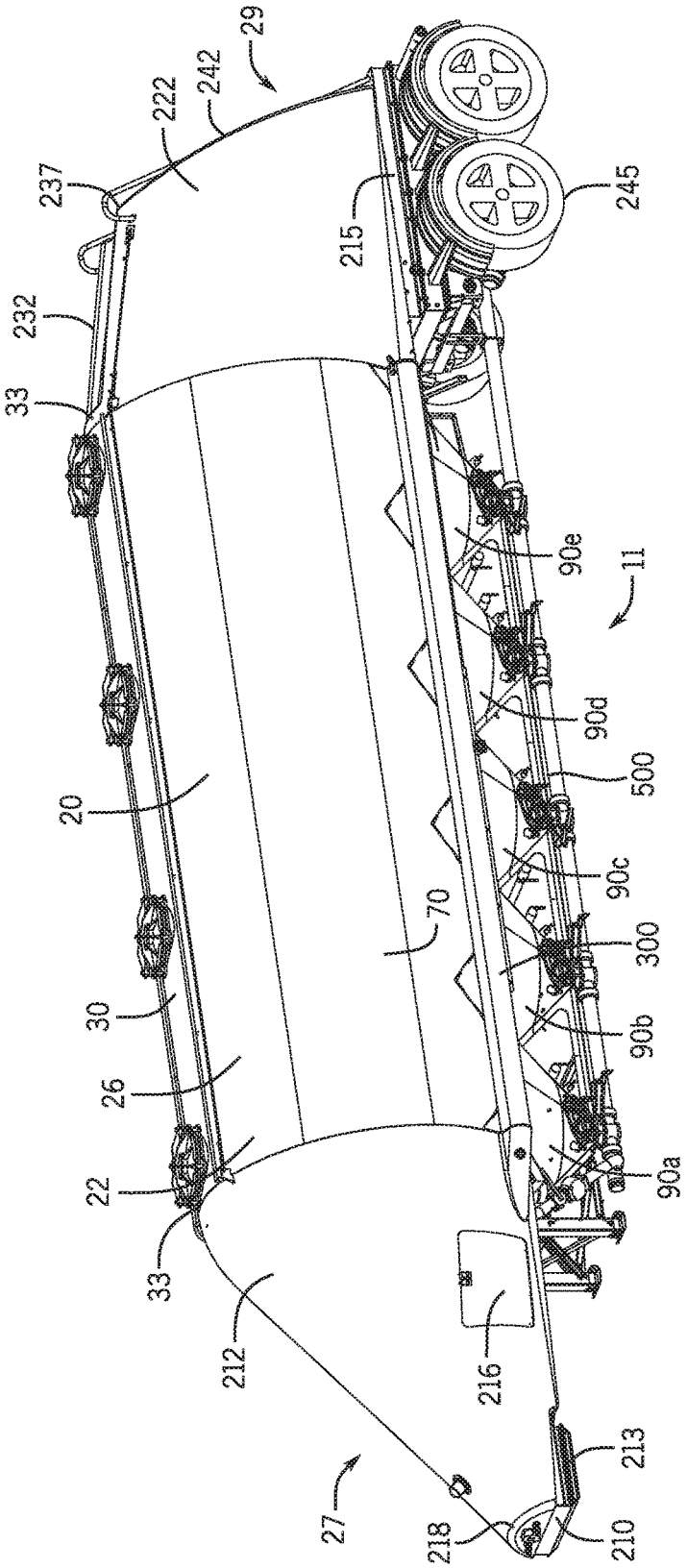
29
242
222
237
232
33
215
245
90e
11
90d
500
20
90c
70
300
30
90b
26
22
90a
33
212
216
213
27
218
210

FIG. 12

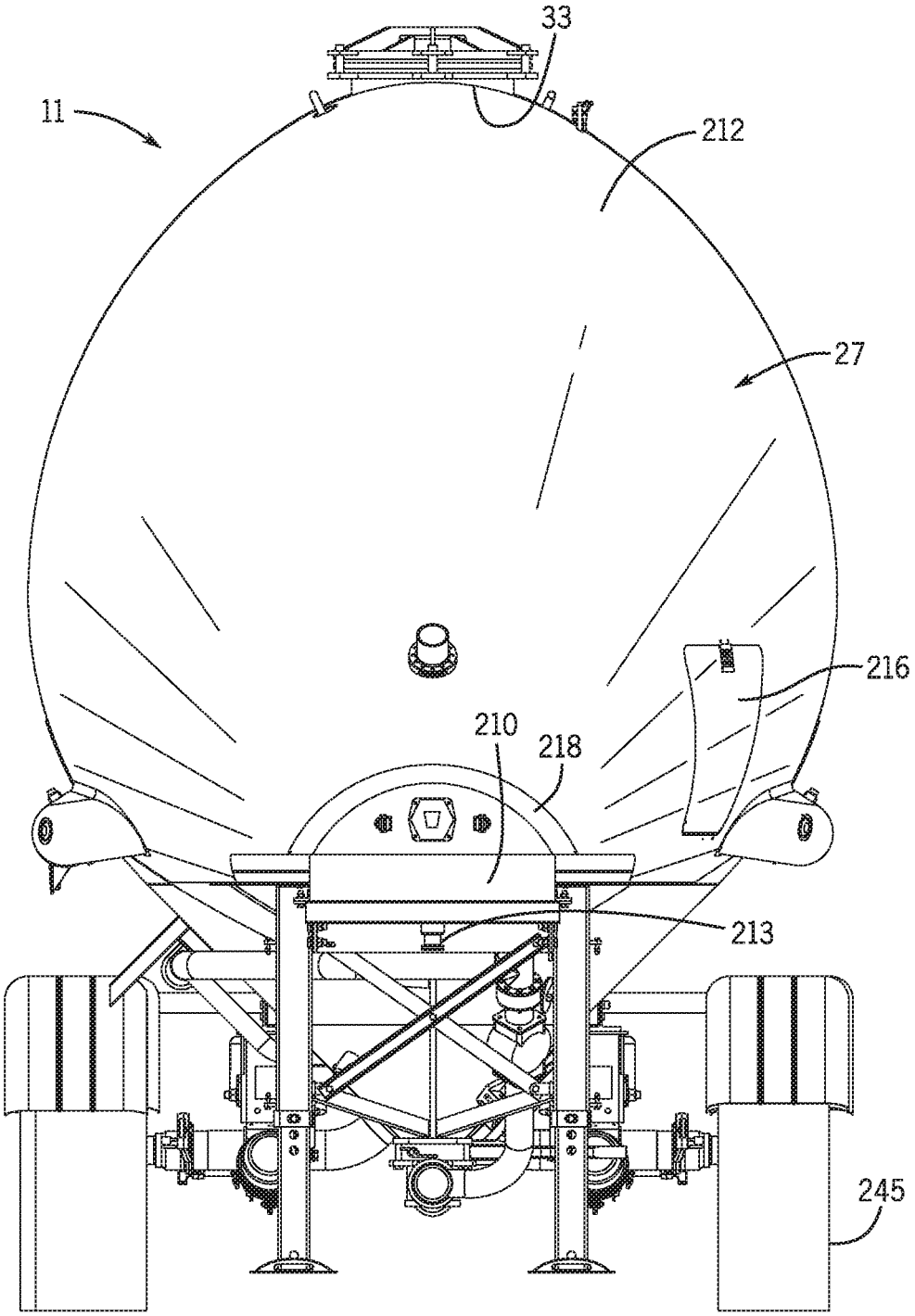

FIG. 13

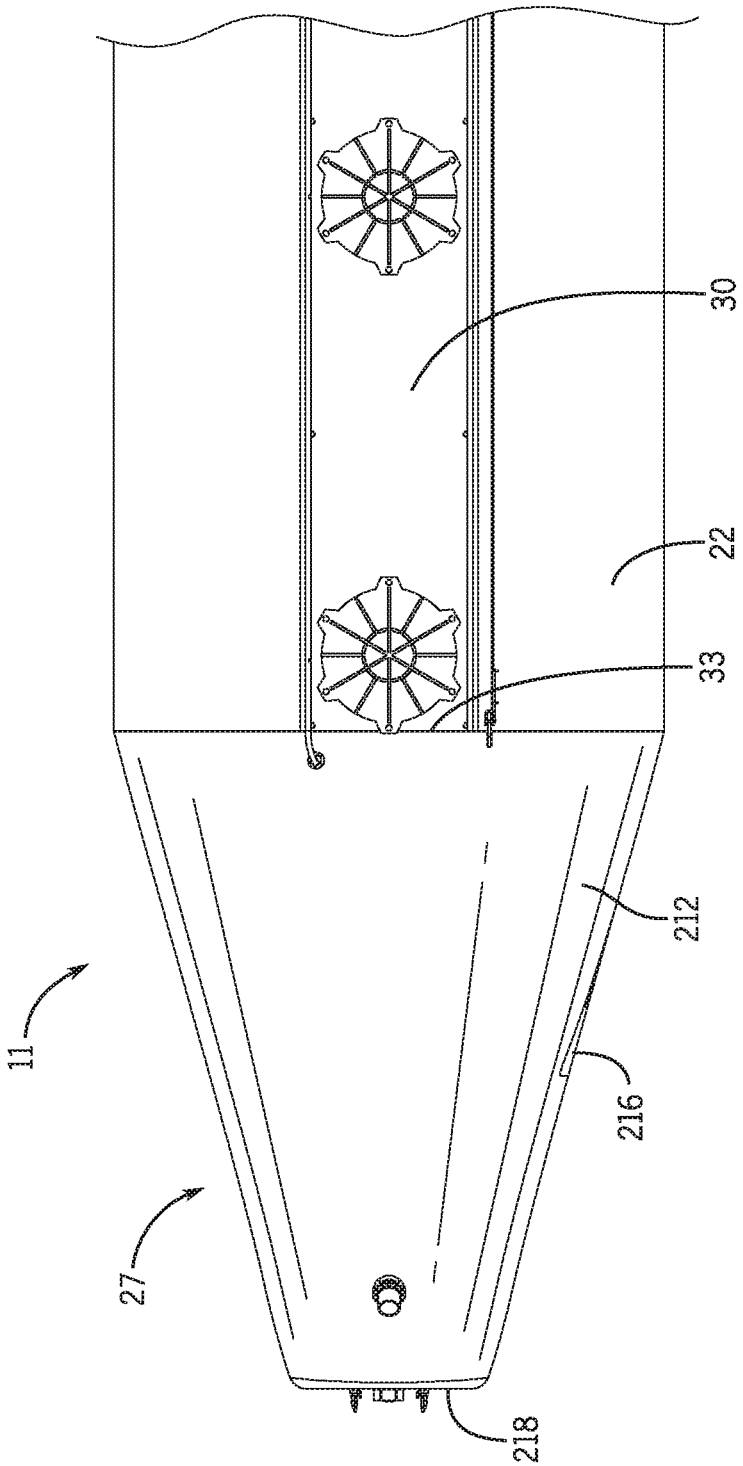

FIG. 14

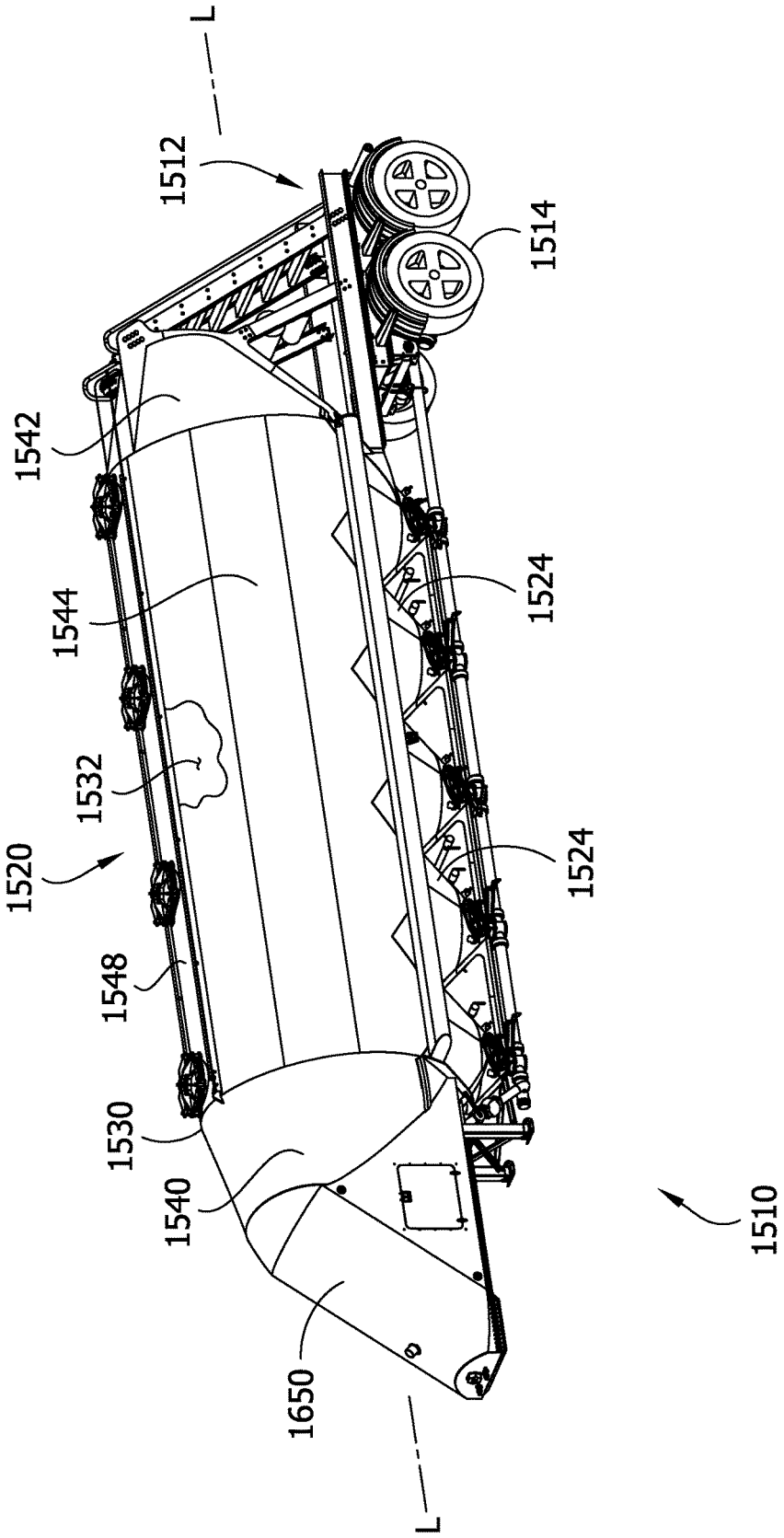
L
1512
1514
1542
1544
1524
1532
1520
1524
1548
1530
1540
1510
1650
L

FIG. 15

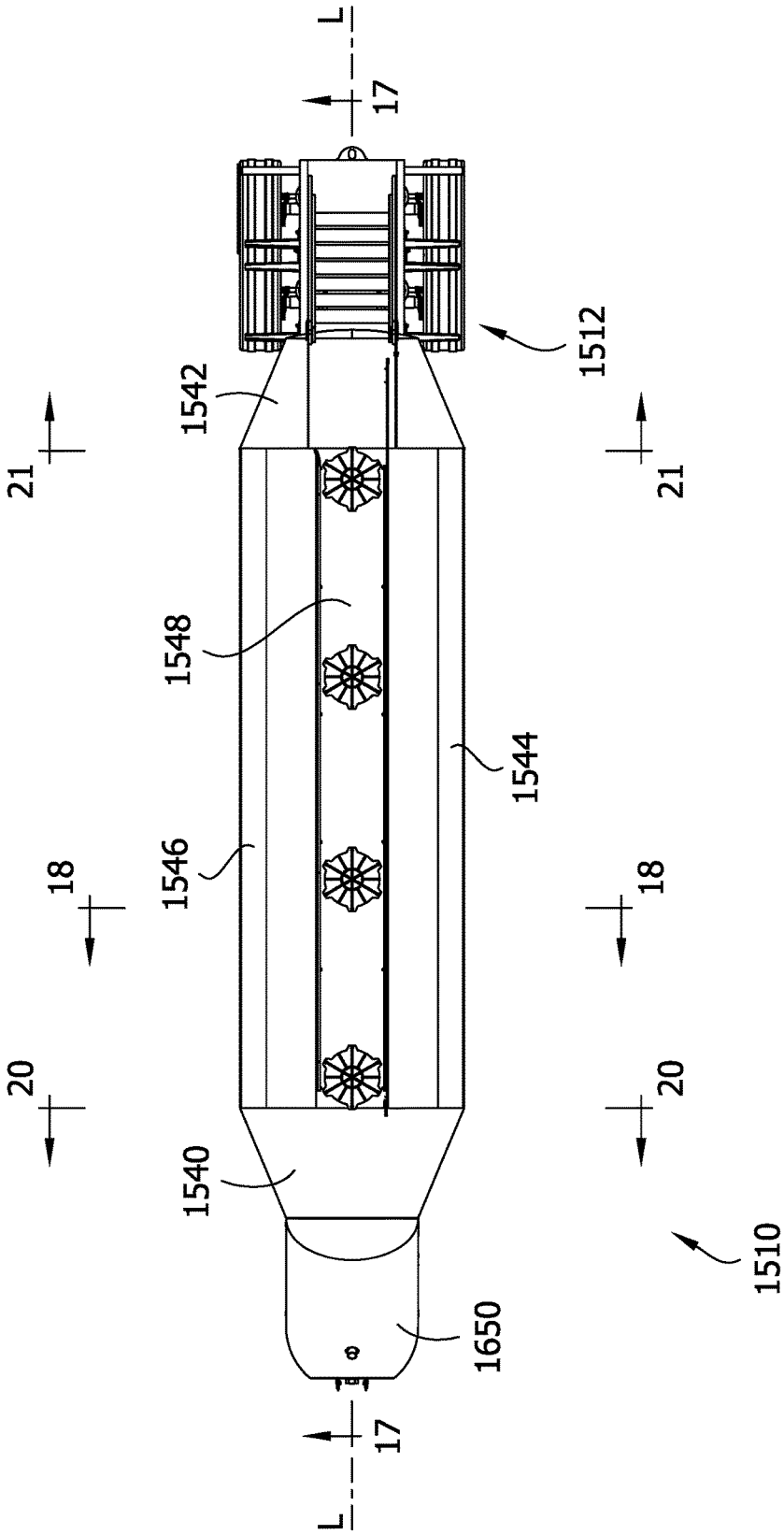
L
17
1512
1542
21
21
1548
1544
1546
18
18
20
20
1540
1510
1650
17
L

FIG. 16

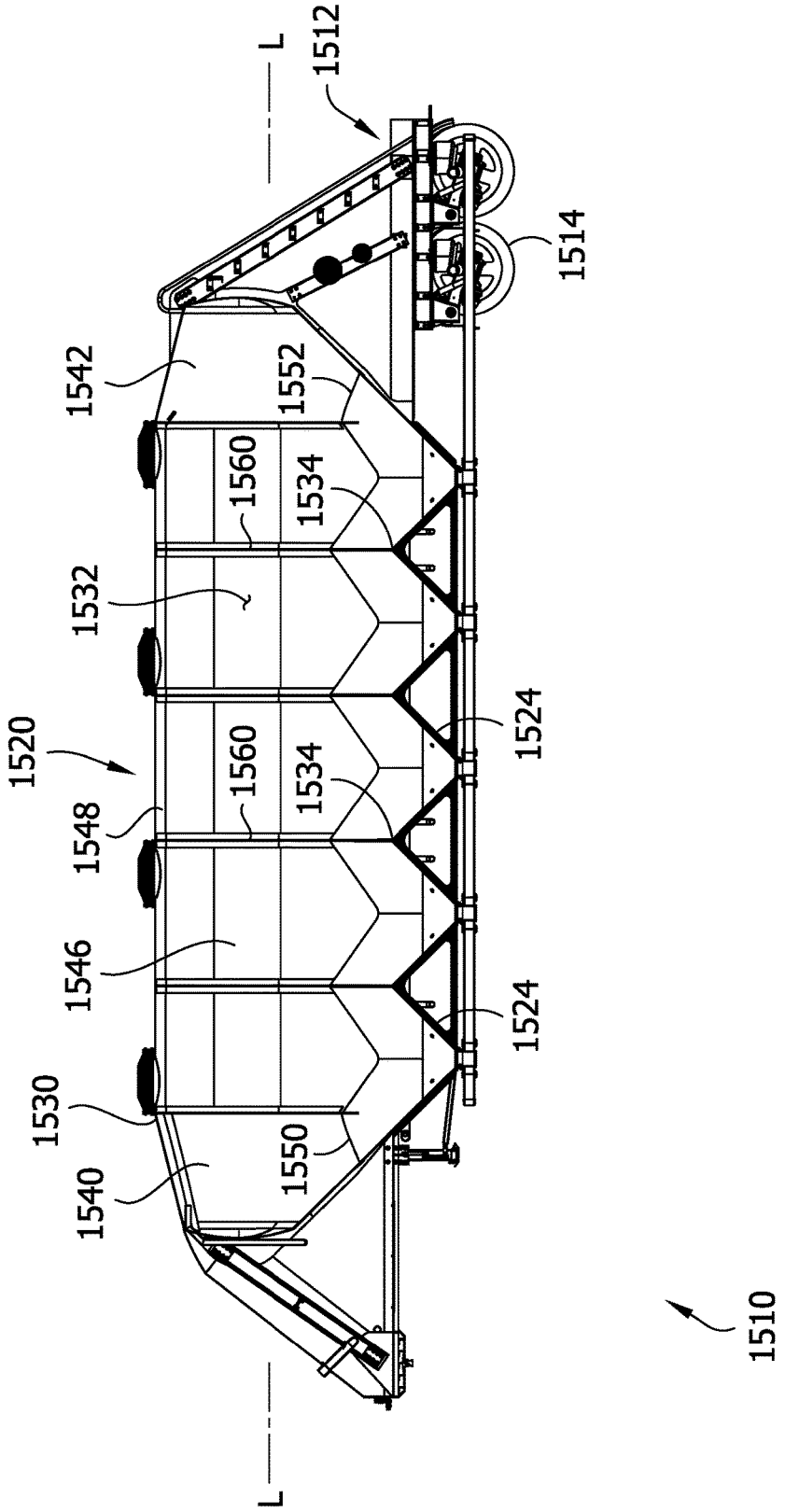
1512
L
1514
1542
1552
1560
1534
1532
1520
1524
1560
1534
1548
1546
1524
1530
1550
1540
1510
L

FIG. 17

FIG. 18

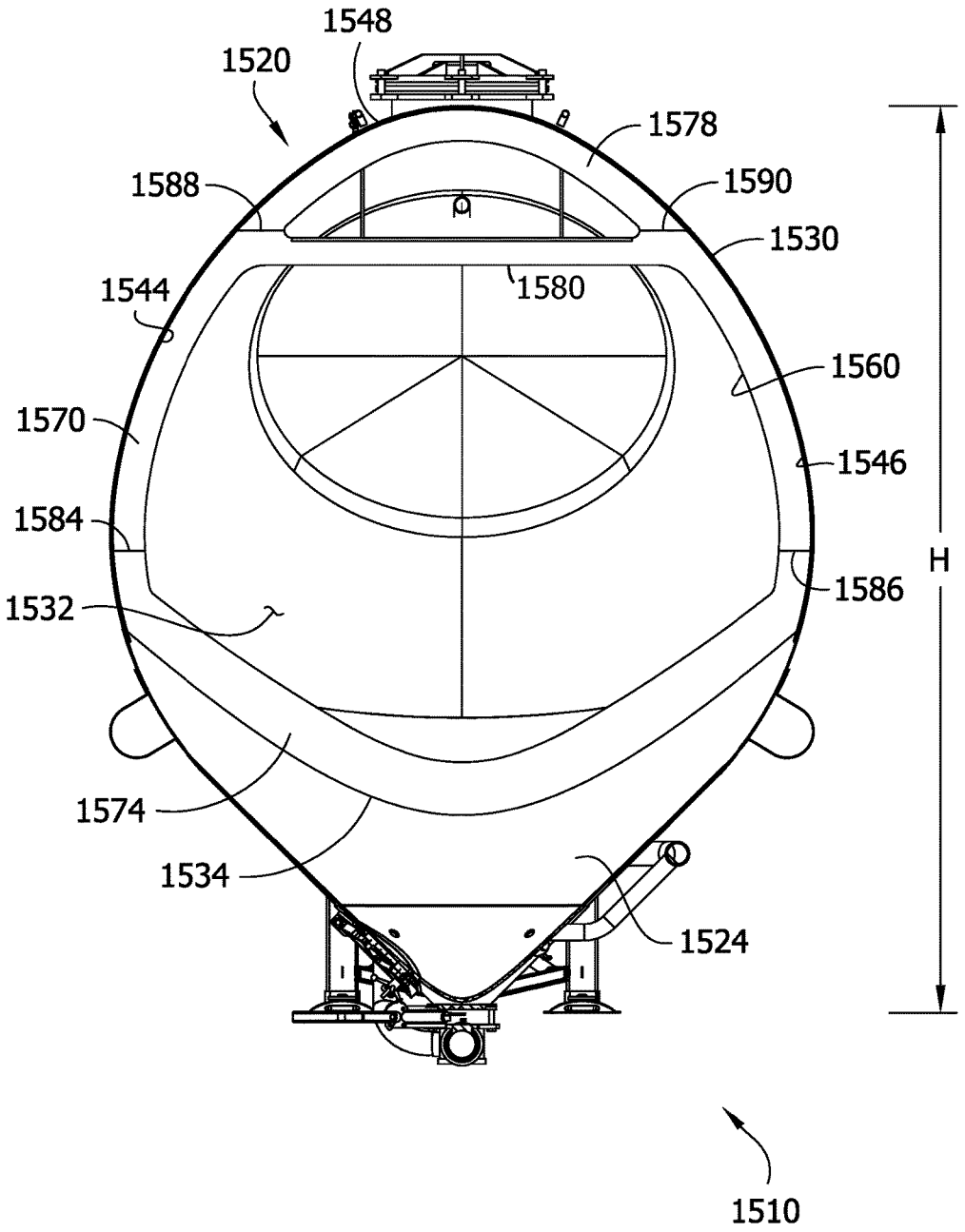
1548
1520
1578
1588
1590
1530
1544
1580
1560
1570
1546
1584
H
1586
1532
1574
1534
1524
1510

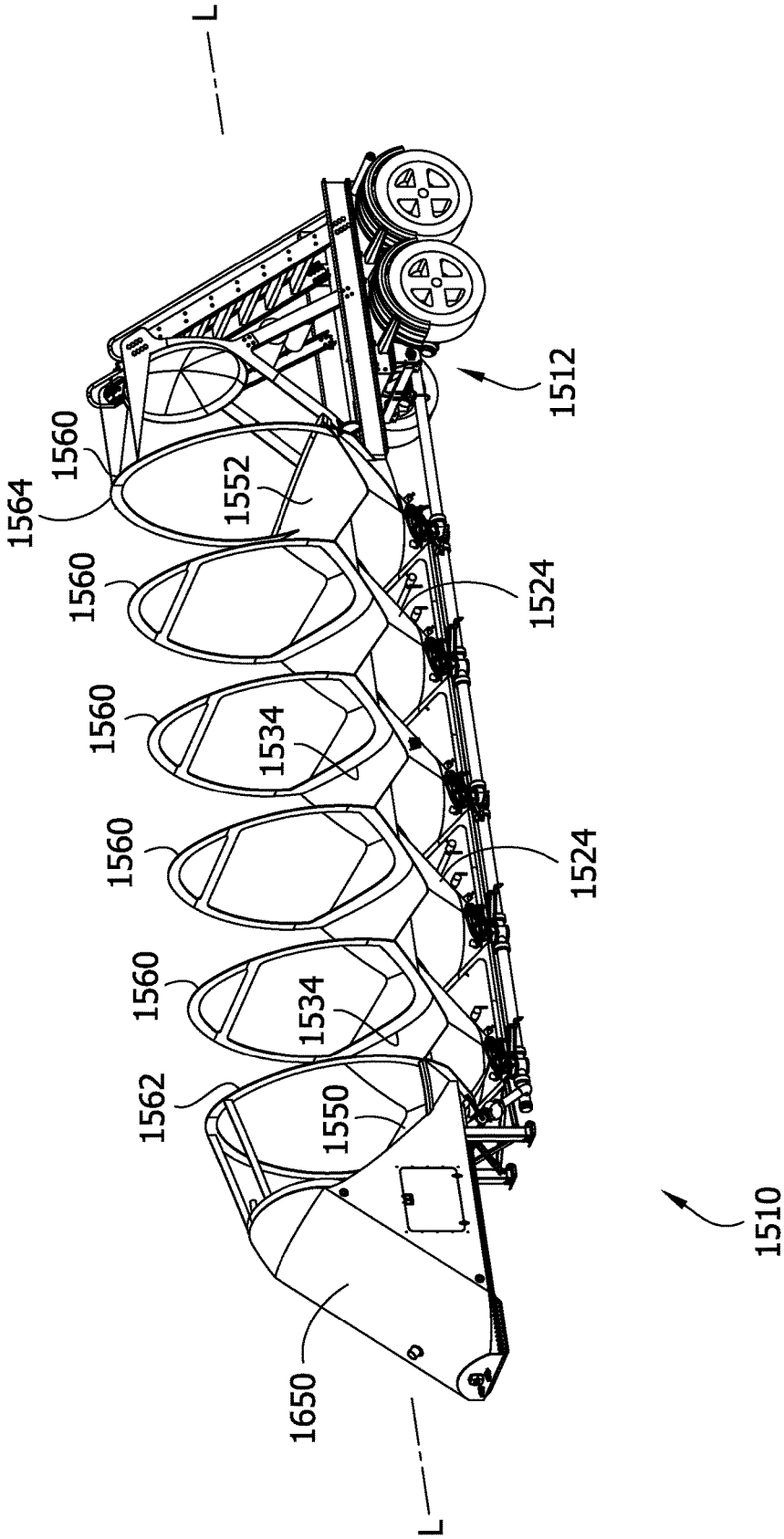
L
1512
1560
1564
1552
1560
1524
1560
1534
1560
1524
1560
1534
1562
1550
1510
1650
L

FIG. 19

FIG. 20

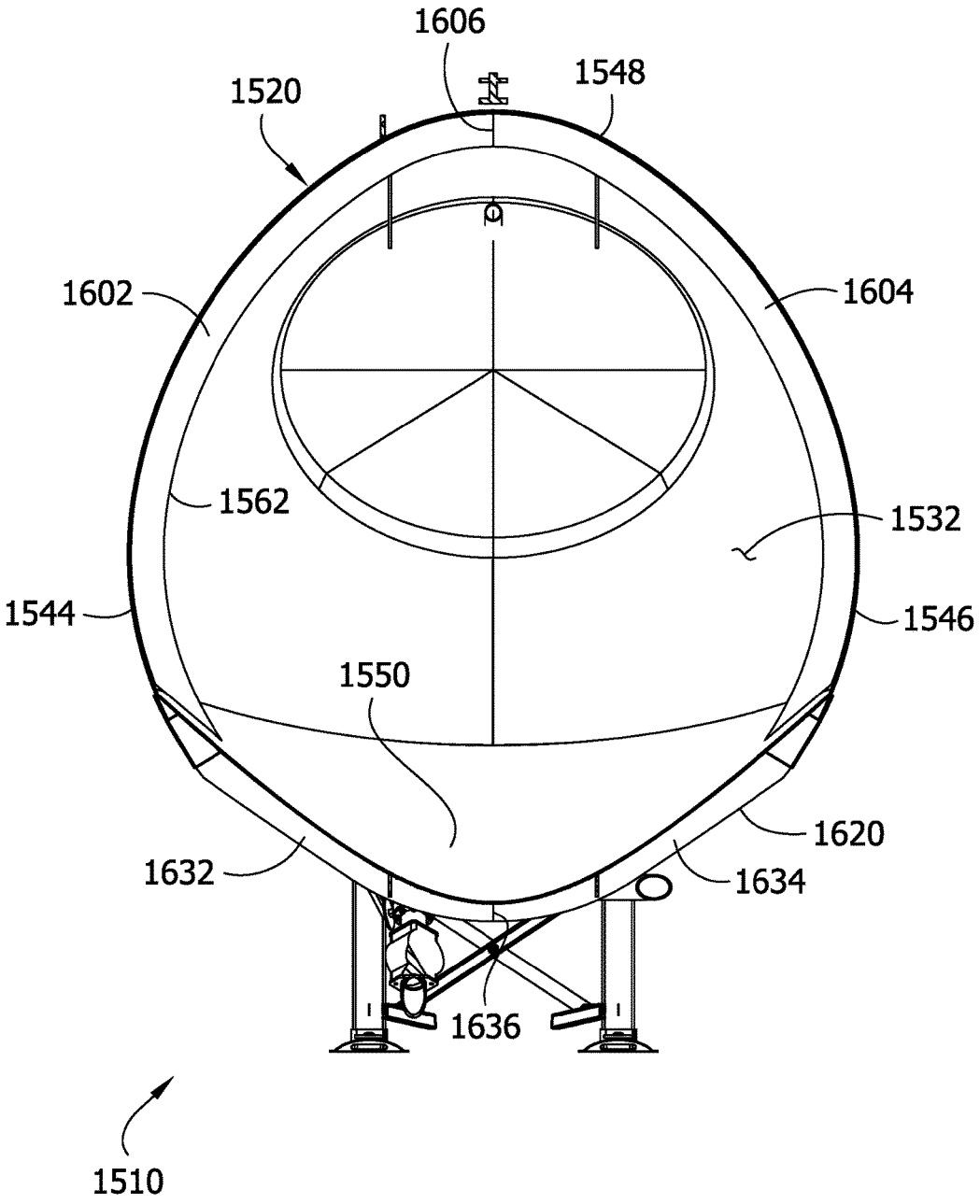
1606
1548
1520
1602
1604
1562
1532
1544
1546
1550
1620
1632
1634
1636
1510

FIG. 21

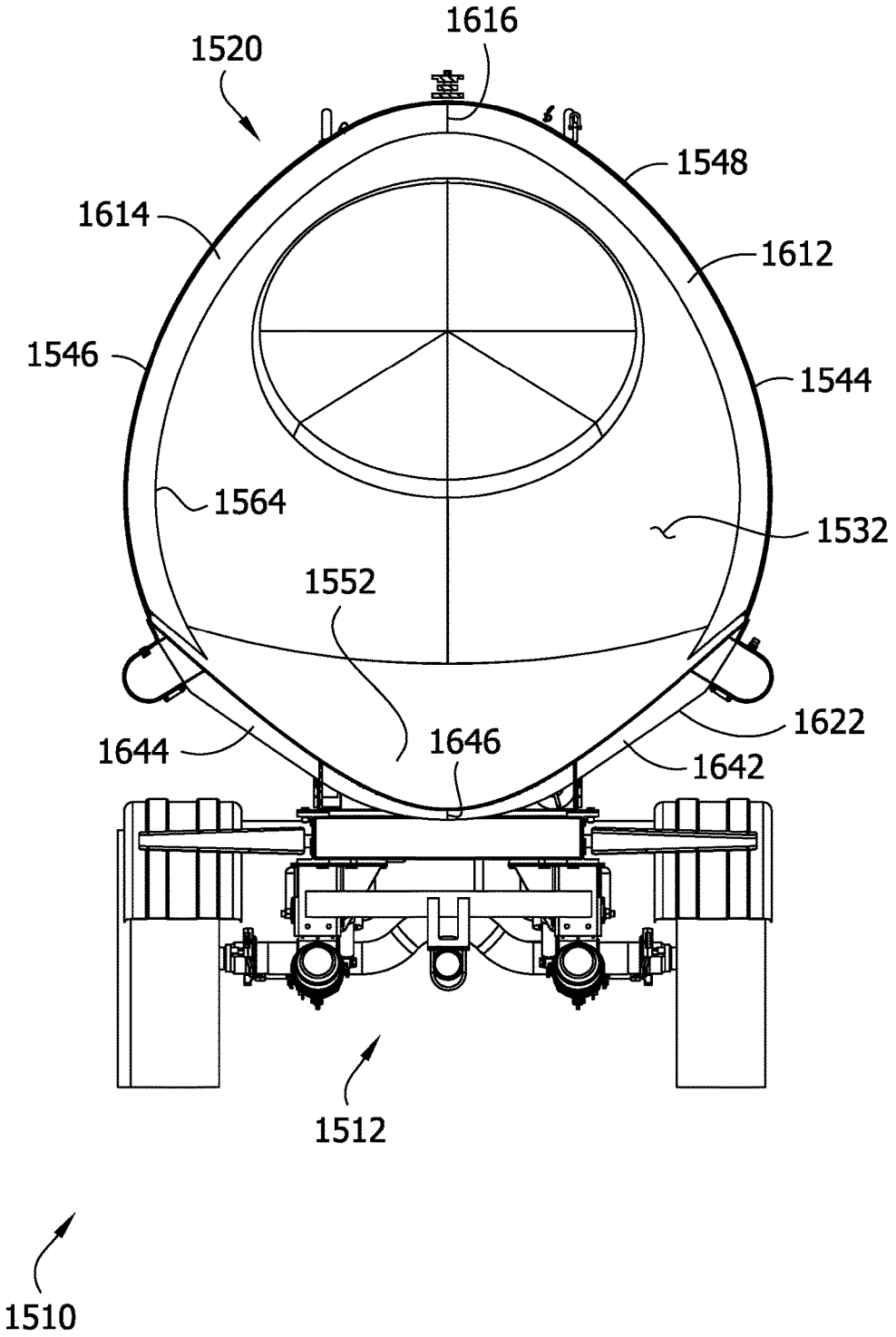
1616
1520
1548
1614
1612
1546
1544
1564
1532
1552
1622
1644
1646
1642
1512
1510

PNEUMATIC TANK TRAILER

CROSS REFERENCE TO RELATED APPLICATION

This application is a continuation-in-part of U.S. patent application Ser. No. 14/515,708, filed Oct. 16, 2014, which claims the benefit of U.S. Provisional Patent Application No. 61/891,630 filed Oct. 16, 2013. Each of these applications is hereby incorporated by reference in its entirety.

FIELD OF INVENTION

The present invention relates to a pneumatic tank trailer.

BACKGROUND OF INVENTION

Pneumatic tank trailers are commonly used to haul a variety of dry bulk materials, such as, for example, lime products, cement, fly ash, food products, etc. The pneumatic tank trailers include a tank that receives the dry bulk materials. The materials are loaded through manholes located on a top of the tank. The tank typically includes pressurizing systems to facilitate unloading of the dry bulk materials. The tank typically includes one or more hoppers positioned along an approximate bottom surface of the tank and trailer. These hoppers promote the discharge of the dry bulk materials from the trailer. Aeration systems engaged to the hoppers may also assist in fluidizing the dry bulk materials. The hoppers typically include angled walls that lead to a discharge pipe or conduit. A combination of the aeration systems, the pressurizing systems, blowers, and gravity cause the dry bulk materials to discharge from the discharge pipe or conduit.

Pneumatic tank trailers are almost always equipped with at least one, and typically several, hose tubes that store hoses that connect the tank trailer to the silo equipment. The hose tubes are generally an added component that merely fastens to the tank with no other purpose than to house the hoses.

Pneumatic tank trailers generally have round or ovular cross-sections which accommodate the pressure received from the pressurizing system. However, filling such round or ovular tanks with materials (many materials commonly hauled in a pneumatic trailer have an approximate 45 degree angle of repose), may leave a substantial amount of dead, unused space in the trailer. The dead space in the trailer is undesirable as it increases the time necessary to pressurize the tank, and leaves unused capacity in the trailer that still needs to be hauled. Hauling dead space is inefficient. By reducing dead space in the tank of the trailer, a trailer is made more efficient since the trailer can be filled more to capacity. Often, drivers will try to minimize the amount of dead space in the trailer by shaking down the load. Shaking down the load is done by pressurizing the tank, and/or moving the trailer forward and then stopping abruptly, causing the materials in the tank to shift. This fills some of the dead space and allows more material to be loaded through the manholes in order to top off the trailer. Some drivers will shake down the load multiple times. Shaking down a load is undesirable because it takes a significant amount of time and is hard on the trailer. It is an aspect of the present invention to provide a trailer that can be loaded to capacity with single pass loading and/or can be loaded to capacity without shaking the load down.

A front region of a conventional pneumatic tank trailer is generally exposed to oncoming air during travel. The front region of the conventional pneumatic tank trailer faces

generally perpendicular to the direction of travel, and the front region is exposed to the oncoming air and creates turbulence, as the air strikes against various plumbing fittings and structural members positioned at the front of the trailer. This front region often includes the structural and support members as well as plumbing, parts of plumbing, fittings, valves, and pipes for the pressurizing systems. When the trailer is moving, wind and air strike the front of the trailer, plumbing, fittings, and pipes thus creating turbulence and drag. This turbulent air is directed about the trailer, resulting in reduced fuel efficiency for the vehicle towing the pneumatic tank trailer.

External vertical ribs are often positioned generally perpendicular to a length of a tank on pneumatic trailers. The external vertical ribs are usually positioned on the external surface of the tank generally perpendicular to a length of a tank. The external vertical ribs generally extend all the way around the tank. The external vertical ribs may be used to reinforce a joint between adjacent segments, or reduce the stress in the tank as it is pressurized. The external vertical ribs cause wind resistance and drag, and thus reduce fuel efficiency.

SUMMARY OF INVENTION

A pneumatic tank trailer with improved aerodynamic efficiency is described. A pneumatic tank trailer with several functional improvements is described.

The pneumatic tank trailer includes a tank. A front end cover is positioned over a front portion of the pneumatic tank trailer. The front end cover partially covers and attaches to a front end cone of the tank. The front end cover also covers plumbing and fittings for a pressurization system of the pneumatic tank trailer. The front end cover improves the aerodynamics of the trailer by providing a smooth surface with a large radius transition from the front cover to the tank.

In one aspect, a pneumatic tank trailer comprises a tank having front and rear ends spaced apart along a longitudinal axis. The tank comprises a plurality of hoppers each having a top end portion and bottom end portion. The top end portions of adjacent hoppers are arranged next to each other and define hopper joint areas. The bottom end portions of the hoppers are spaced apart along the longitudinal axis of the tank. A tank wall extends along the longitudinal axis of the tank and defines an interior of the tank. The tank wall includes opposite first and second side wall portions and a top wall portion extending between the first and second side wall portions. The first and second side wall portions of the tank have bottom edge portions that are joined to the top end portions of the hoppers. A plurality of internal frames is joined to the tank in spaced apart relationship along the longitudinal axis of the tank to support the tank against internal pressures therein. Each internal frame comprises a bottom portion joined to a respective hopper joint area of the tank, opposite first and second side portions joined to the first and second side wall portions of the tank, respectively, and a cross joist portion extending between the opposite side wall portions of the tank in spaced apart relationship with the bottom portion of the respective internal frame and the top wall portion of the tank. A carriage is connected to and supporting the tank for movement over a road.

In another aspect, a pneumatic tank trailer comprises a carriage for movement over a road and a tank connected to and supported by the carriage and having front and rear ends spaced apart along a longitudinal axis. The tank comprises a plurality of hoppers each having a top end portion and bottom end portion. The top end portions of adjacent hop-

pers are arranged next to each other and define hopper joint areas. The bottom end portions of the hoppers are spaced apart along the longitudinal axis of the tank. A tank wall extends along the longitudinal axis of the tank and defines an interior of the tank. The tank wall includes opposite first and second side wall portions and a top wall portion extending between the first and second side wall portions. The first and second side wall portions of the tank have bottom edge portions that are joined to the top end portions of the hoppers. A plurality of internal frames are joined to the tank in spaced apart relationship along the longitudinal axis of the tank to support the tank against internal pressures therein. Each of the internal frames is longitudinally aligned with a respective hopper joint area and extends circumferentially around the tank interior. Each internal frame has a bottom portion joined to the respective hopper joint area. First and second side portions are joined to the first and second wall portions, respectively, and a top portion is joined to the top wall portion. Each internal frame comprises a plurality of frame members that are separately joined together to form the respective internal frame. At least some of the frame members extend circumferentially around the tank interior and continuously contact the tank wall and respective hopper joint area.

In another aspect, a pneumatic tank trailer comprises a carriage for movement over a road and a tank connected to and supported by the carriage and having front and rear ends spaced apart along a longitudinal axis. The tank comprises a plurality of hoppers including a front hopper adjacent the front end of the tank and a rear hopper adjacent the rear end of the tank. Each of the hoppers have a top end portion and bottom end portion, the top end portions of adjacent hoppers arranged next to one another and defining hopper joint areas such that the bottom end portions of the hoppers are spaced apart along the longitudinal axis of the tank. A tank wall extends along the longitudinal axis of the tank and defines an interior of the tank. The tank wall includes a front wall portion defining the front end of the tank, a rear wall portion defining the rear end of the tank, opposite first and second side wall portions, and a top wall portion extending between the first and second side wall portions. The first and second side wall portions of the tank have bottom edge portions that are joined to the top end portions of the hoppers. The front wall portion is joined to the top end portion of the front hopper at a front joint area and the rear wall portion is joined to the top end portion of the rear hopper at a rear joint area. An internal frame for each hopper joint area is joined to the tank in longitudinal alignment with the hopper joint area and extends circumferentially around the tank interior. A front frame is joined to the tank in longitudinal alignment with the front joint area and extends circumferentially around the tank interior. The front frame has an internal portion extending inside the tank along the first side wall portion, top wall portion, and second side wall portion of the tank wall and an external portion extending underneath the tank along the front joint area. A rear frame is joined to the tank in longitudinal alignment with the rear joint area and extends circumferentially around the tank interior. The rear frame has an internal portion extending inside the tank along the first side wall portion, top wall portion, and second side wall portion of the tank wall and an external portion extending underneath the tank along the rear joint area.

Other objects and features will be in part apparent and in part pointed out hereinafter.

BRIEF DESCRIPTION OF DRAWINGS

FIG. **1** is a perspective view of the pneumatic tank trailer and tractor combination.

FIG. **2** is a side view of the tank.

FIG. **3** is a view of the gravity unload hatch.

FIG. **4** is a sectional view of the hopper showing the gravity unload hatch from the inside.

FIG. **5** is a sectional view of the tank.

FIG. **6** is a sectional view of the tank and the hose tube.

FIG. **7** is a sectional view of the tank and the hose tube.

FIG. **8** is a perspective sectional view of the tank.

FIG. **9** is a perspective view of the bottom rail.

FIG. **10** is a side view of the hoppers and the bottom rail.

FIG. **11** is a side view of the second trailer.

FIG. **12** is a perspective view of the second trailer.

FIG. **13** is a front view of the second trailer.

FIG. **14** is atop down view of the front section of the second trailer.

FIG. **15** is a perspective of another embodiment of a pneumatic tank trailer.

FIG. **16** is atop plan view of the trailer of FIG. **15**.

FIG. **17** is a section taken in the plane of line **17-17** of FIG. **16**.

FIG. **18** is a section taken in the plane of line **18-18** of FIG. **16**.

FIG. **19** is a perspective of the trailer with a tank wall removed to reveal internal components.

FIG. **20** is a section taken in the plane of line **20-20** of FIG. **16**.

FIG. **21** is a section taken in the plane of line **21-21** of FIG. **16**.

Corresponding parts are given corresponding reference numbers throughout the drawings.

DETAILED DESCRIPTION OF INVENTION

A pneumatic tank trailer **10** and components thereof are shown in FIGS. **1-14**. The pneumatic tank trailer **10** includes a tank **20** that defines an interior volume **25**. The tank **20** is the holding section of the pneumatic tank trailer **10** that can be pressurized. The pneumatic tank trailer **10** includes a front end portion **27** that is proximate a king pin of the pneumatic trailer **10**. The king pin connects the pneumatic tank trailer **10** to the tractor or other towing vehicle. The pneumatic tank trailer **10** includes a rear end portion **29** proximate rear wheels **245** of the pneumatic tank trailer **10**. The interior volume **25** may be pressurized to facilitate unloading of the dry bulk material.

The pneumatic tank trailer **10** includes an aerodynamic shape that improves fuel efficiency. The pneumatic tank trailer **10** may be designed for traveling over one million miles during its lifetime, and aerodynamic efficiency results in significant fuel costs savings. As described below, the pneumatic tank trailer **10** includes several features to reduce weight and improve aerodynamic efficiency and thereby reduce fuel costs. The tank trailer **10** also includes several features to improve the operation and function of the tank trailer **10**.

The pneumatic tank trailer **10** has a generally smooth top surface and sides, with no external vertical ribs aligned generally perpendicular to the direction of travel. The generally smooth top surface and sides help increase aerodynamic efficiency.

The tank **20** includes a barrel portion **26** generally positioned above a hopper portion **28**. As shown in FIG. **6**, the barrel portion **26** and the hopper portion **28** are generally joined together along a joining region **31**. The hopper portion **28** includes an upper hopper portion wall **38** that engages a lower barrel portion wall **36** of the barrel portion **26** at the joining region **31**. The engagement between barrel

portion **26** and the hopper portion **38** at the joining region **31** may include a seam, intersection, or other interconnection.

The front end portion **27** of the pneumatic tank trailer **10** also contributes to the improved aerodynamic efficiency. The front end portion **27** faces the direction of travel, and the front end portion **27** is generally exposed to the oncoming air. A front end cover **211** generally encloses the front end portion **27** of the trailer **10**. A front of the tank **20** includes a front end cone **201**. The front end cone **201** is integral with the barrel portion **26** of the tank **20**. The front end cover **211** blends into the front end cone **201**.

The front end cover **211** covers fittings and structural members to improve the aerodynamic efficiency of the pneumatic tank trailer **10**. The combination of the front end cone **201** and the front end cover **211** provides for less turbulent air to pass over and to the sides of the pneumatic tank trailer **10**. A seam **206** between the front end cone **201** and the front end cover **211** is made generally smooth. Likewise, a transition **209** between the front end cone **201** and the remainder of the tank **20** is made generally smooth.

The pneumatic tank trailer **10** includes a top surface **30** generally opposite of a bottom surface **40**. The bottom surface **40** is formed from one or more hoppers **90***a-e* of the hopper portion **28**. The top surface **30** of the tank **20** is generally flat and has zero slope longitudinally for most of or a majority of its length. The top surface **30** blends into the front end cone **201** at the transition **209**. With reference to FIG. **2**, a side view of the trailer **10** shows the sloping shape of the front end cone **201**.

The barrel portion **26** of pneumatic tank trailer **10** also includes a first side surface **70** generally opposite of a second side surface **80**. The barrel portion **26** may be welded or otherwise mechanically attached to or over the hoppers **90***a-e* of the hopper portion **28** in an air tight fashion. The side surfaces **70** and **80** provide a smooth, aerodynamic surface that attaches to upper edges of the hoppers **90***a-e*. The first and second side surfaces **70** and **80** of the pneumatic tank trailer **10** are generally smooth, with no external vertical ribs, to help increase aerodynamics. The side surfaces **70** and **80** transition into the lower barrel portion wall **36**, which joins with the hopper portion **28** at the joining region **31**.

The front end portion **27** of the pneumatic tank trailer **10** will now be further described. The front end cone **201** is generally positioned forward of the first hopper **90***a*. The front end cone **201** may include a sloping external surface **203**. The front end cover **211** connects a front deck **210** and the front end cone **201**. The front end cover **211** defines an interior that encloses or covers plumbing and structural members of the front deck **210**. The front end cone **201** provides an aerodynamic transition between the front end cover **211** and the top surface **30** of the tank **20**.

The pneumatic tank trailer **10** includes the front end cone **201** that slopes down at an angle between approximately 5 and 15 degrees from a horizontal plane. The front end cone **201** slopes down from the top surface **30** of the barrel portion **26** and in from the side surfaces **70** and **80** of the barrel portion **26** at an angle of approximately between 5 and 15 degrees. The front end cover **211** comprises a large radius to allow air to flow smoothly over the front end cover **211** and front end cone **201** of the front end portion **27**. The large radius allows for air to flow smoothly over front end portion **27** and the outer surface **22** of the tank **20**, reducing the aerodynamic drag.

The front end cover **211** blends right into the front end cone **201**, which then transitions into an outer surface **22** of the tank **20** with no obstructions. This blending of the surfaces of the front end cover **211**, the front end cone **201**, and the barrel portion **26** of the tank **20** allows for smooth airflow over the outer surface **22** of the tank **20**, and also reduces air flow from becoming detached from the tank **20** as the air flows over the tank **20**.

The rear end portion **29** of the pneumatic tank trailer **10** will now be described with reference to FIG. **2**. A rear of tank **20** includes a rear end cone **221**. The rear end cone **221** is integral with the barrel portion **26**. The rear end cone **221** is generally rear of the fifth hopper **90***e*. The rear end cone **221** also slopes down from the top surface **30** and in from the side surfaces **70** and **80** of the barrel portion **26** of the tank **20** at an angle between approximately 5 and 15 degrees from a horizontal plane. The rear end cone **221** attaches to a rear deck **215** via supports **225**. The rear end cone **221** assists in providing an aerodynamic profile for the pneumatic tank trailer **10**. At the rear end portion **29**, the hopper **90***e* joins with a rear chassis **240** and the rear wheels **245**.

The hopper portion **28** of the tank **20** includes the one or more hoppers **90***a-e*. With reference to FIG. **2**, the hopper portion **28** includes the first hopper **90***a*, a second hopper **90***b*, and a third hopper **90***c*, a fourth hopper **90***d*, and a fifth hopper **90***e*. The first hopper **90***a* is the most forward hopper, i.e., it is the hopper closest to the tractor. The fifth hopper **90***e* is the most rear hopper. In other aspects, the tank **20** may include fewer or additional hoppers **90**. For example, the tank **20** may include one, two, three, four, six, seven or more hoppers **90**.

At a bottom surface **40** of the tank **20**, the first hopper **90***a* leads to an opening **95***a*, the second hopper **90***b* leads to an opening **95***b*, the third hopper **90***c* leads to an opening **95***c*, the fourth hopper **90***d* leads to an opening **95***d*, and the fifth hopper **90***e* leads to an opening **95***e*. Each of the hoppers **90***a*-**90***e* includes angled walls **98***a-e* leading to the openings **95***a-e*. The angled walls **98***a-e* each have a cone shape that funnels the materials to the openings **95***a-e*.

An improved gravity unload hatch **110** for the hoppers **90***a-e* will now be described with reference to FIGS. **3** and **4**. One or more of the hoppers **90***a-e* include the gravity unload hatch **110** for accelerated gravity unloading or dumping of the materials from the tank **20**. The gravity unload hatch **110** offers a faster alternative for dumping materials to ground level or areas beneath the tank **20** than conventional unloading methods for a pneumatic trailer. The gravity unload hatch **110** opens and closes a side opening **102** of the hoppers **90***a-e*. The gravity unload hatch **110** does not impede typical unloading of pneumatic trailer **10**. The side opening **102** of the hopper **90** may be fully opened by pivoting the gravity unload hatch **110** on a pivot assembly **104**. The gravity unload hatch **110** is attached to the hopper **90***a-e* over a top edge **98** of the side opening **102**. The pivot assembly **104** is affixed to the hopper **90***a-e* above the top edge **98** of the side opening **102**. With the gravity unload hatch **110** attached to the hopper **90***a-e* at the pivot assembly **104** near the top edge **98** of the side opening **102** and with the gravity unload hatch **110** and opening upwards (towards the top of the tank trailer **10**), the material from within the hopper **90***a-e* does not fall out over the gravity unload hatch **110**. As such, the gravity unload hatch **110** does not impede or slow the flow of materials from the side opening **102**.

The gravity unload hatch **110** also includes swing bolts **106** that provide for the gravity unload hatch **110** to press tightly against a seal (not shown) creating an airtight barrier as the gravity unload hatch **110** seals closed over the side opening **102**. The gravity unload hatch **110** does not deflect further than the compression of the internal seal when the tank **20** is pressurized. The gravity unload hatch **110** mounts

flush with an interior surface **108** of the hoppers **90***a-c*. The gravity unload hatch **110** also has a smooth inner surface that allows for easier cleaning of the hopper **90***a-e* and prevents material buildup in or around the gravity unload hatch **110**.

Hose tubes **300**, which strengthen the tank **20**, will now be described with reference to FIGS. **5-7**. The pneumatic tank trailer **10** includes one or more hose tubes **300** as structural members. The one or more hose tubes **300** act as a sheath or storage area for hoses that connect the tank trailer **10** to the silo equipment. The hoses are stored in the hose tubes **300** during travel from one location to another location.

The one or more hose tubes **300** may strengthen the joining region **31** between the barrel portion **26** and the hopper portion **28**. The pneumatic tank trailer **10** may include one hose tube **300** along the first side surface **70** of the tank trailer **10** and a second hose tube **300** along the second side surface **80**. The one or more hose tubes **300** are engineered into the tank **20** in order to strengthen the tank **20**.

The hose tubes **300** are shown in detail in FIGS. **5-7**. At the joining region **31**, the hopper portion **28** curves in and out along a length of the tank **20**. Due to the curved outer exterior of the hoppers **90***a-e*, the joining region **31** includes an irregular or undulating border between the hopper portion **28** and the barrel portion **26**. Along the length of the hose tubes **300**, the hose tubes **300** may alternatingly connect to the barrel portion **26** and to the hopper portion **28**. The pneumatic tank trailer **10** integrates the hose tubes **300** into the tank **20** to add stiffness to the intersection of the hoppers **90***a-e* and the remainder of the tank **20** and to the intersection of adjacent hoppers **90***a-e*. These intersections are prone to high stress and cracking, as the shape does not lend itself well to holding pressure. The use of the hose tubes **300** as a structural member decreases this stress without appreciably increasing the weight of the tank trailer **20**. Further, as the hose tubes **300** are attached to the tank **20**, the interactions of the hoppers **90***a-e* and the hose tubes **300** cause vortices and/or a recirculation zone to form in an airflow region between the hoppers **90***a-e* that decreases the aerodynamic drag of the tank trailer **10** when being pulled at highway speed by a tractor.

The hose tubes **300** include an inner open region **305** to contain or store the hoses. With specific reference to FIG. **7**, the hose tubes **300** include a lower edge **310** and an upper edge **320**. The lower edge **310** transitions into a central curved region **330** that further transitions into the upper edge **320**. The lower and upper edges **310** and **320** may include a generally flat cross-section before the lower and the upper edges **310** and **320** transition into the central curved region **330**. The lower and upper edges **310** and **320** engage the outer surface **22** of the tank **20**. For example, the lower and upper edges **310** and **320** may be welded, riveted, or otherwise mechanically engaged to the tank **20** in an airtight fashion. The lower edge **310** may engage the upper hopper portion wall **38** and the upper edge **320** may engage the lower barrel portion wall **36**. The hose tubes **300** may span the joining region **31** between the barrel portion **26** and the hopper portion **28** of the tank trailer **20** in order to improve strength.

The hose tubes **300** may have sufficient length to cover or engage at least a portion of all of the hoppers **90***a-e*. Typically, the hose tubes **300** will extend along the side of the most forward hopper, i.e., the first hopper **90***a*, and extend along the side of the most rear hopper, i.e., the fifth hopper **90***e*. Typically, a first hose tube **300** will extend along the first side surface **70** and a second hose tube **300** will extend along the second side surface **80**. In other aspects, the hose tubes **300** may have a squared, box-like, arcuate, or semi-circular shape.

An improved shape for the tank **20** will now be described with reference to FIGS. **5** and **8**. The barrel portion **26** of the tank **20** further includes an ovoid shape cross-section, similar to an egg-shape. The barrel portion **26** has its greatest width toward its engagement with the hopper portion **28**. The barrel portion **26** is generally narrower in width closer to the top surface **30** and wider in width closer toward the joining region **31**. The barrel portion **26** has a smaller radius near the top surface **30** than a radius nearer to the hopper portion **28**.

The ovoid egg-shape of the tank **20** significantly reduces the amount of dead space in the tank **20**. The dead space is an empty area of the tank **20** which is not filled when a material is loaded into the tank **20** from the top manhole covers **35**. This design allows for high percentage first pass fill during the loading of materials into the tank **20**, and the design also decreases the amount of time required to pressurize the trailer **10**. The egg-shape cross-section of the tank **20** may also allow the trailer **10** to carry a larger load with a smaller cubic foot trailer (e.g., a 1700 cubic foot egg-shaped trailer may hold as much as oval 1800 cubic foot trailer **10** when each are loaded with a single pass). This also increases the aerodynamic efficiency of the trailer **10** by reducing the cross sectional area perpendicular to the area of travel without decreasing the load carrying capacity of the trailer **10**.

The interior volume **25** of the tank **20** may be filled with a dry bulk material. The one or more manholes **35** are positioned in the top surface **30**. The dry bulk materials are passed through the manholes **35** in order to fill the interior volume **25** of the tank **20** with the dry bulk materials. With the egg-shape of the tank **20**, more efficient and even filling of the tank **20** is achieved.

The tank **20** further includes one or more internal cross-supports **400** near an approximate top one-third of the tank **20**. The cross-supports **400** extend across the barrel portion **26**. The cross-supports **400** help support the tank **20** against the internal pressure from pressurization and the weight of the materials. The internal cross-supports **400** help maintain the cross-sectional area of the barrel portion **26**. The stress from pressurization will urge the barrel portion **26** to have a more rounded cross-section. The deflection that occurs when an egg-shaped trailer tries to become round may cause significant stress. However, the cross-supports **400** placed between the internal ribs **410** significantly decrease the stress in the egg-shaped tank **20**.

The one or more internal cross-supports **400** are positioned in the barrel portion **26** of the tank **20**. The tank **20** further includes internal ribs **410** that engage an inner surface **23** of the tank **20**. The internal ribs **410** have a generally vertical orientation, and line the inner surface **23** of the tank **20**. The cross-supports **400** extend in a direction generally perpendicular to the direction of travel of the tank trailer **10**. The cross-supports **400** are engaged to the internal ribs **410**, and the cross-supports **400** extend the entire span between the internal ribs **410**, i.e., the width of the tank **20**. The cross-supports **400** may pass through the interior **25** of the tank **20**. The cross supports **400** are manufactured to have no or very little upward facing surfaces so that materials will not be caught on the cross supports **400**. The cross supports **400** are also connected to the internal ribs **410** with a large radius to facilitate cleaning of the tank **20**.

An improved frameless design for the trailer **10** will now be described with reference to FIGS. **9** and **10**. The tank **20**

further includes a bottom rail **500**. By eliminating the typical side frames used in many conventional tank trailers, the weight of the trailer **20** is reduced and fuel efficiency is improved. The bottom rail **500** is mounted to the tank **20**. The bottom rail **500** also limits the deflection of the hoppers **90***a-e* and helps to maintain the stresses at an acceptable level. The bottom rail **500** also makes it easier to manufacture the trailer **20** right side up.

With reference to FIG. **10**, the bottom rail **500** extends along the bottom of the hoppers **90***a-e* from the most forward hopper **90***a* to the most rear hopper **90***e*. The bottom rail **500** lies along a central axis for the trailer **10**. The tank **20** may include a single bottom rail **500** as its frame. The tank **20** does not require additional frame members positioned along the bottom surface **40**.

The bottom rail **500** is integrated with one or more triangular supports **520**. The triangular supports **520** generally include three surfaces. A bottom surface **530** of the triangular support **520** engages a top surface **503** of the bottom rail **500**. A front surface **540** of the triangular support **520** engages the exterior surface of one of the hoppers **90***a-e*, while a rear surface **550** of the triangular support **520** engages the exterior surface of an adjacent hopper **90***a-e*. Generally, a triangular support **520** is positioned between each hopper **90***a-e*. For example, the pneumatic tank trailer **10** includes five hoppers **90***a-e*, and thus four triangular supports **520** are used in order to position a triangular support **520** between each of the hoppers **90***a-e*.

The bottom rail **500** includes one or more openings **505** positioned to receive the openings **95***a-e* of the hoppers **90***a-e*. The hoppers **90***a-e* may pass through the openings **505** in the bottom rail **500**, seal the openings **95***a-e* against the openings **505** in the bottom rail **500**, or seat in the lower openings **505** of the bottom rail **500**.

The tank trailer **10** further includes a modular design. The interior **25** of the tank **20** may have a volume of approximately 700 cubic feet of storage to approximately 2500 cubic feet of storage, depending upon the size of the hoppers **90***a-e* and the number of hoppers **90***a-e* utilized. The individual hoppers **90***a-e* may all have a substantially similar or an identical design. The capacity of the pneumatic tank trailer **10** may be increased by adding additional hoppers **90**. The same components, i.e., the hoppers **90**, front end cones **201**, rear end cones **221**, and front end covers **211**, may be used with trailers **20** of different lengths. The only difference between the trailers **20** would be the number of hoppers **90** and the length of the barrel portion **26**. A pneumatic tank trailer **20** with two hoppers **90***a-b* may provide approximately 700 cubic feet of storage. A pneumatic tank trailer **20** with three hoppers **90***a-c* may provide approximately 1000 cubic feet of storage. A pneumatic tank trailer **20** with four hoppers **90***a-d* may provide approximately 1350 cubic feet of storage. A pneumatic tank trailer **20** with five hoppers **90***a-e* may provide approximately 1800 cubic feet of storage. The pneumatic tank trailer **10** creates a whole family of pneumatic trailers simply by adding hoppers **90** and increasing the length of the barrel portion **26**.

The hoppers **90***a-e* are fluidly connected to a discharge line **260** that extends the approximate length of the pneumatic tank trailer **10**. The discharge line **260** includes a discharge opening **262** which provides for discharge of the bulk material from the tank **20**. The respective openings **95***a-e* of the hoppers **90***a-e* join the discharge line **260** in order to pass the dry bulk material to the discharge line **260**. Each of the hoppers **90***a-e* may include a valve for controlling discharge through their respective openings **95***a-e*. The hoppers **90***a-e* may further include aeration systems (not shown) that assist in emptying the tank **20** of the dry bulk material. Such aeration systems are well known to those skilled in the art. During travel, the dry bulk material in the tank **20** may compact, under its weight, in the lower portions of the hoppers **90***a-e* and the aeration system helps promote flow of the material from the hoppers **90***a-e*.

The hoppers **90***a-e*, the front end cone **201**, and the rear end cone **221** and the barrel portion **26** may be formed from metals and metal alloy materials, such as aluminum, having a thickness of approximately ⅛ inch to ⅜ inch, although the thickness of the material may vary throughout the construction of the tank **20**.

It is another aspect of the present invention to provide a trailer **10** with a lower center of gravity. This increases the stability of the trailer **10** as it is pulled around a corner. It is a further aspect of this invention to provide a trailer **10** that is as short in length as possible while still complying with federal bridge laws. These laws are well known to those skilled in the art. A shorter trailer **10** will be easier to maneuver and will fit into tighter quarters, which may be necessary for the loading and unloading of the tank **20**. In order to accomplish these aspects, the trailer **10**, in certain aspects, may be made approximately 102 inches wide. The hoppers **90***a-e* are also more numerous and closer together than on a conventional pneumatic trailer. This increases the amount of material that can be held lower, and thus the center of gravity is lower. These same modifications have also allowed the trailer **10** to be built having a wheel base as short as possible while still complying with federal bridge laws.

In another aspect, a trailer **11** is shown in FIGS. **11** and **12**. The trailer **11** is generally the same or similar to trailer **10** in construction, except for a front end cover **212** and a rear end cover **222**. Other like or similar components or structures between the trailer **10** and the trailer **11** are numbered the same in FIGS. **11** and **12**. The trailer **11** includes the front end cover **212** that slopes down at an angle of approximately 10 degrees to approximately 55 degrees. The front end cover **212** substantially covers the front end cone **201** of the tank **20**. The front end cover **212** extends from the top surface **30** of the barrel portion **26** and encloses the front end portion **27** of the trailer **11**. The front end cover **212** extends from the top surface **30** of the barrel portion **26** to the front deck **210** of the trailer **11**. The front end cover **212** may extend from the top surface **30** of the barrel portion **26** to a leading surface **218** of the front end cover **212** at an angle of approximately 10 degrees to approximately 55 degrees. The front end cover **212** provides an aerodynamic leading surface for the trailer **11** that covers the front end cone **201**. Sides of the front end cover **212** also angle or taper inwards toward the leading surface **218** of the front end cover **212**. The sides of the front end cover **212** may angle or taper inwards at an angle of approximately 10 degrees to approximately 25 degrees.

In the aspect shown in FIGS. **11** and **12**, the front end cover **212** slopes down from the top surface **30** at an angle of approximately 45 degrees. At this angle, the front end cover **212** covers the front end cone **201**, which may be formed with steeper sides to more closely match the angle of repose of the material filled into the tank **20**. The front end cover **212** generally encloses the front end portion **27** of the trailer **11**. The front end cover **212** slopes from the barrel portion **26** to a kingpin **213** and/or the front deck **210** of the trailer **11**.

The front end cover **212** blends into the outer surface **22** of the tank **20** at a seam **33**. The top surface **30** has a

generally zero slope leading into the seam **33**, and the front end cover **212** slopes down from the seam **33** at an angle of approximately 45 degrees.

The front end cover **212** includes an access **216**, such as a hatch, door, or other removable cover that provides access to the plumbing and support structure of the trailer **11**. The front end cover **212** is not an integral portion of the trailer **20**, i.e., the trailer **20** may be filled and towed without the front end cover **212**. The front end cover **212** may be made from aluminum, fiberglass or other suitable materials.

The trailer **11** also includes the rear end cover **222** that slopes generally down from the top surface **30** of the barrel portion **26** at an angle of approximately 5-15 degrees and in from the sides **70** and **80** of the barrel portion **26** at an angle of approximately 5-15 degrees. The rear end cover **222** substantially covers the rear end cone **221**. The rear end cover **222** may extend from the top surface **30** to the rear deck **215**. The rear end cover **222** may cover the entire distance between the top surface **30** and the rear deck **215**. The rear end cover **222** may blend into the top surface **30** at a seam **33**. The top surface **30** has a generally zero slope leading into the seam **33**. At the seam **33**, the rear end cover **222** slopes downward at the angle of approximately 5-15 degrees.

The rear end cover **222** includes a front portion **232** and a rear portion **242**. The front portion **232** may slope downward at an angle of approximately 5-15 degrees. At the rear portion **242** of the rear end cover **222**, the slope increases to approximately 45 degrees to 65 degrees or more in the downward direction. A transition point **237** may separate the front portion **232** from the rear portion **242**. At the transition point **237**, the slope of the rear end cover **222** increases from 5-15 degrees to approximately 45 degrees to 65 degrees. The rear end cover **222** could be formed with steps or a ladder that allows access to the top surface **30** of the trailer **11**.

The rear end cover **222** may be made of aluminum, fiberglass, or other suitable materials. The rear end cover **222** includes an access, such as a hatch, door, or other removable cover that provides access to tanks, hoses, etc. stored in the rear end portion **29** of the trailer **11**.

Referring to FIGS. **15** and **16**, another embodiment of a pneumatic tank trailer is generally indicated at reference number **1510**. The trailer **1510** is similar in many respects to the trailers discussed above. The trailer **1510** includes a carriage **1512** that mounts trailer wheels **1514** for rolling along an underlying surface. The carriage **1512** supports and mounts a tank **1520**, which extends along a longitudinal axis L of the trailer **1510** from a front end to a rear end adjacent the carriage. The tank **1520** includes a plurality of hoppers **1524** that define a bottom end portion of the tank and a tank wall **1530** that extends up from the hoppers **1524** and defines an interior **1532** of the tank. The tank **1520** is configured to receive fluidizable material in the interior **1532** and to selectively discharge the material through the hoppers **1524**. Moreover, the interior **1532** of the tank **1520** is configured to be pressurized to cause material to more easily and completely flow out of the hoppers **1524**.

As will be appreciated, lightweight framing reinforces the tank **1520** to withstand large internal pressures without adversely affecting the fuel efficiency of the trailer **1510**. As will be discussed in further detail below, the weight and cost of the framing is minimized by using relatively high strength reinforcement at locations of the tank **1520** where internal fluid pressure causes significant stress and using less reinforcement at lower stress locations. The illustrated design also minimizes the amount of framing that extends externally of the tank wall **1530** to minimize the drag coefficient of the trailer **1510**.

In the illustrated embodiment, the tank **1520** includes five hoppers **1524** spaced apart along the longitudinal axis L of the tank. Other embodiments can use other numbers and arrangements of hoppers without departing from the scope of the invention. Referring to FIG. **17**, each of the hoppers **1524** has a top end portion and a bottom end portion. The top end portions of adjacent hoppers are arranged next to each other and define hopper joint areas **1534**, and the bottom end portions of adjacent hoppers are spaced apart along the longitudinal axis L of the tank **1520**. The hopper joint areas **1534** join together adjacent hoppers **1524** and define a peak so that material received in the interior **1532** of the tank **1520** at the hopper joint areas generally falls to either side of the hopper joint area and into one of the respective hoppers.

Each hopper joint area **1534** has the same general shape. Referring to FIG. **18**, in the illustrated embodiment each hopper joint area **1534** has a curved shape. The hopper joint areas **1534** extend from a first high point adjacent one side of the tank **1520**, to a low point about midway between the opposite sides of the tank, to another high point adjacent the opposite side of the tank.

Referring again to FIGS. **15** and **16**, the tank wall **1530** extends along the longitudinal axis L of the tank **1520** from a front wall portion **1540** to a rear wall portion **1542**. The tank wall **1530** also includes opposite first and second side wall portions **1544**, **1546** and a top wall portion **1548**. Together, the first and second side wall portions **1544**, **1546** and the top wall portion **1548** extend along the longitudinal axis L from the front wall portion **1540** to the rear wall portion **1542**. As shown in FIG. **17**, the front wall portion **1540** is joined to the top end portion of the front hopper **1524** at a front joint area **1550**. The rear wall portion **1542** is, likewise, joined to the top end portion of the rear-most hopper **1524** at a rear joint area **1552**. The top wall portion **1548** extends generally laterally between the first and second side wall portions **1544**, **1546** and defines the top of the tank **1520**. The side wall portions **1544**, **1546** have bottom edge portions that are joined to the top end portions of the hoppers **1524** to fully enclose the tank **1520**. As shown in FIG. **18**, the top wall portion **1548** is spaced apart from the bottom ends of the hoppers **1524** by a height H.

Referring to FIG. **19**, the illustrated trailer **1510** includes a plurality of central internal frames **1560** joined to the tank **1520** in spaced apart relationship along the longitudinal axis L of the trailer **1510**. The central internal frames **1560** support the tank **1520** against internal pressures therein. The central internal frames **1560** are located entirely within the interior **1532** of the tank **1520**. As shown in FIG. **15**, the result is a tank **1520** with a relatively smooth exterior profile, particularly along the sides and top of the tank. In contrast with prior art pneumatic tank trailers with external tank framing, the illustrated tank **1520** is thought to have a lower drag coefficient, which is thought to improve the fuel efficiency of the trailer **1510**.

Each of the internal frames **1560** is longitudinally aligned with a respective hopper joint area **1534** (FIG. **17**) and extends circumferentially around the tank interior **1532** (FIG. **18**). As shown in FIG. **19**, each of the internal frames **1560** is a metal plate extending in a plane transverse to the longitudinal axis L of the tank **1520**. The use of a plate instead of another type of structural member is thought to reduce the total weight of each internal frame **1560**. In the illustrated embodiment, the central internal frames **1560** are substantially identical. But in other embodiments the central

internal frames can have different shapes and arrangements without departing from the scope of the invention.

In addition to the central internal frames **1560**, the illustrated tank includes front and rear internal frames **1562**, **1564** that are longitudinally aligned with the respective front joint area **1550** and rear joint area **1552**. Like the central internal frames **1560**, the front and rear internal frames **1562**, **1564** are formed from metal plates extending in respective planes oriented transverse to the longitudinal axis L of the tank **1520**. As will be discussed in further detail below, the front and rear internal frames **1562**, **1564** do not extend through the tank interior **1532** along the bottom end of the tank. Instead, other, external structure reinforces the bottom end of the tank at the front and rear joint areas **1550**, **1552**.

As shown in FIG. **18**, each central internal frame **1560** is a multi-piece assembly comprising distinct frame members that are joined together at respective joints. In the illustrated embodiment, the internal frame **1560** comprises a central frame member, a bottom frame members **1574**, and a top frame member **1578**. Using a multi-piece assembly for the internal frame members **1560** greatly reduces manufacturing costs in comparison with forming the internal frame members as a single piece. But it will be understood that one-piece frames can also be used without departing from the scope of the invention.

In general, the central frame member **1570**, bottom frame member **1574**, and top frame member **1578** are joined together to define a frame **1560** that extends circumferentially around the tank interior **1532** in substantially continuous contact with the tank wall **1530** and hopper joint area **1534**. The central frame member **1570** forms a side portion of the central internal frame **1560** extending along the first side wall portion **1544** of the tank wall **1530** and another side portion of the central internal frame that extends along the second side wall portion **1546**. The central frame member **1570** is preferably joined to the first and second side wall portions **1544**, **1546**, respectively, such as by welding. The bottom frame member **1574** forms a bottom portion of the central internal frame **1560** that extends along the respective hopper joint area **1534**. The top frame member **1578** similarly forms a top portion of the central internal frame **1560** that extends along the top wall portion **1548**. Like the central frame member **1570**, the bottom and top frame members **1574**, **1578** are preferably joined to the respective segments of the tank **1520**, for example by welding.

Along with being joined to the tank **1520**, the illustrated frame members **1570**, **1574**, **1578** are joined to one another by welding. In other embodiments, frame members can be joined together in other ways without departing from the scope of the invention. One skilled in the art will appreciate that, when two pieces are joined together at a welded joint, the resulting assembly is generally weakest near the location of the weld. To ensure the central internal frame assembly **1560** withstands the forces imparted upon the tank **1520** by internal pressures, the frame members **1570**, **1574**, **1578** are joined together at joint locations where the tank experiences lower stress when under internal pressure.

Several exemplary joint locations will now be briefly described. The bottom frame member **1574** is joined to the lower end of one side of the central frame member **1570** at a first lower side joint **1584**. The first lower side joint **1584** is spaced apart above the high point of the of the hopper joint area **1534** near the first side wall portion **1544**. The bottom frame member **1574** is also joined to the central frame member **1570** at a second lower side joint **1586**. The second lower side joint **1586** is located spaced apart above the high point of the hopper joint area **1534** near the second side wall portion **1546**. The central frame member **1570** is joined to the top frame member **1578** at a first upper side joints **1588** located adjacent the intersection between the top wall portion **1548** and the first side wall portions **1544** and a second upper side joint **1590** located adjacent the intersection between the top wall portion **1548** and the second side wall portion **1546**. The locations of the joints **1584**, **1586**, **1588**, **1590** at the lower corners and upper corners of the tank **1520** are thought to align with locations around the circumference of the tank **1520** that experience relatively less stress when the tank **1520** is pressurized to facilitate unloading of fluidizable product.

Besides locating the joints at low stress locations around the tank **1520**, the illustrated central internal frame member is also shaped and arranged to provide greater reinforcement to high stress tank locations. In the illustrated embodiment, the width of the internal frame member **1560** varies as it extends circumferentially around the tank interior **1532**. At the bottom portion of the central internal frame **1560**, where internal pressure is thought to exert a relatively high amount of stress on the tank **1520**, the frame has a relatively large width. Along the top and sides of the tank **1520**, where internal pressure is thought to exert a relatively low amount of stress on the tank **1520**, the frame has a smaller width. By using less reinforcing material at locations of the tank **1520** that experience lower stress, the total weight of each central internal frame **1560** is reduced. In contrast with heavier framing, the lightweight central internal frames **1560** are thought to improve the fuel efficiency of the trailer **1510**.

In addition to extending circumferentially around the tank interior **1532**, the central internal frame **1560** also includes a cross joist portion **1580**. The cross joist portion **1580** extends laterally between the side wall portions **1544**, **1546** of the tank wall **1530** at a location spaced apart between a bottom and top portions of the internal frame **1560**. Preferably, the cross joist portion **1580** of the central internal frame **1560** is vertically spaced apart from the bottom end portion of the hoppers **1524** by at least two-thirds of the tank height H. For example, the cross joist portion **1580** can be spaced apart above the lower side joints **1584**, **1586** such that the lower side joints are spaced apart between the cross joist portion and the high points of the respective hopper joint area **1534**. In the illustrated embodiment, the central frame member **1570** has an inverted U-shape and forms the cross joist portion **1580**. But in other embodiments, it is contemplated that, for example, the top frame member could define the cross joist portion without departing from the scope of the invention.

While the central internal frames **1560** are shaped to define the cross joist portion **1580** and extend circumferentially around the tank interior **1532**, the front and rear internal frames **1562**, **1564** are shaped differently to accommodate material located in the front and rear end portions of the tank interior **1532**. Because the central internal frames **1560** are aligned with hopper joint areas **1534**, the first and second lower frame members **1574**, **1576** do not block material from flowing freely into the hoppers **1524**. The material can flow to one side or the other of each central internal frame **1560** into a respective hopper **1524**. The front and rear internal frames **1562**, **1564** are, however, located at the front and rear hopper joint areas **1550**, **1552**, respectively. If a frame member were to extend in the bottom of the tank interior **1532** along the front hopper joint area **1550**, it would block material located forward of the joint area from flowing into the front hopper **1524**. Likewise, if a frame member were to extend in the bottom of the tank interior

1532 along the rear hopper joint area 1552, it would block material located rearward of the rear joint area from flowing into the rear hopper 1524.

To permit free flow of material into the hoppers from substantially any location within the tank interior 1532, the front and rear internal frames 1562, 1564 are arch-shaped, lacking a bottom end portion that extends through the tank interior along the bottom end of the tank 1520. As shown in FIG. 20, the front internal frame 1562 is joined to the tank 1520 (e.g., by welding) and extends inside the tank along the first side wall portion 1544, top wall portion 1548, and second side wall portion 1546. As shown in FIG. 21, the rear internal frame 1564 is joined to the tank 1520 (e.g., by welding) and extends inside the tank along the first side wall portion 1544, top wall portion 1548, and second side wall portion 1546. The front and rear internal frames 1562, 1564 do not, however, extend along the bottom interior surface of the tank at the front and rear hopper joint areas 1550, 1552. Instead, as shown in FIG. 19, the bottom interior surface of the tank 1520 adjacent the front and rear hopper joint areas 1550, 1552 slopes substantially unobstructed from the front and rear ends of the tank to the bottom ends of the front and rear hoppers 1524.

In the illustrated embodiment, the front and rear internal frames 1562, 1564 are multi-piece assemblies. As shown in FIG. 20, the front internal frame 1562 includes a first frame member 1602 that extends along the first side wall portion 1544 and a segment of the top wall portion 1548 and a second frame member 1604 that extends along the second wall portion 1546 and another segment of the top wall portion of the tank. The first and second front internal frame members 1602, 1604 are joined to the tank 1520 and to one another at a joint 1606 (e.g., by welding) to form the front internal frame 1562. The joint 1606 is located at the top of the tank 1520, midway between the side wall portions 1544, 1546, where relatively low stress is thought to be imparted on the tank by internal pressure. As shown in FIG. 21, the rear internal frame 1564 includes a first frame member 1612 that extends along the first side wall portion 1544 and a segment of the top wall portion 1548. A second frame member 1614 extends along the second wall portion 1546 and another segment of the top wall portion 1548. The first and second rear internal frame members 1612, 1614 are joined to the tank 1520 and to one another at a joint 1616 (e.g., by welding) to form the rear internal frame 1564. The joint 1616 is located at the top of the tank 1520, midway between the side wall portions 1544, 1548, where relatively low stress is thought to be imparted on the tank by internal pressure.

Although, to avoid obstructing material flow into the hoppers 1524, the front and rear internal frames 1562, 1564 do not extend along the front and rear hopper joint areas 1550, 1552, it is preferable to still provide other reinforcement of the bottom side of the tank 1520. Referring to FIGS. 20 and 21, the illustrated trailer 1510 includes front and rear external frames 1620, 1622 that reinforce the tank 1520 at the front and rear hopper joint areas 1550, 1552. The front external frame 1620 is aligned with the front internal frame 1562 along the longitudinal axis L of the trailer 1510. In the illustrated embodiment, the front external frame 1620 is a metal plate extending substantially in the same plane as the front internal frame 1562. In the illustrated embodiment, the front external frame 1620 is connected to the front internal frame 1562 by the wall of the tank 1520 at the front joint area 1550. Together the internal and external frames 1562, 1620 form a front frame that extends circumferentially around the tank interior 1532 at the front hopper joint area 1550. The rear external frame 1622 is, likewise, aligned with the rear internal frame 1564 along the longitudinal axis L of the trailer 1510. In the illustrated embodiment, the rear external frame 1622 is a metal plate extending in substantially the same plane as the rear internal plate 1564. The rear external frame 1622 is only connected to the rear internal frame 1564 by the wall of the tank 1520 at the rear joint area 1552. Together the internal and external frames 1564, 1622 form a rear frame that extends circumferentially around the tank interior 1532 at the rear hopper joint area 1552.

As shown in FIG. 20, the front external frame 1620 includes first and second frame members 1632, 1634 that extend downward from the front hopper joint area 1550. The first frame member 1632 extends from one end at the high point of the front hopper joint area 1550 adjacent the first side wall portion 1544 to an opposite end at the low point of the front hopper joint area. Likewise the second frame member 1634 extends from one end at the high point of the front hopper joint area 1550 adjacent the second side wall portion 1546 to an opposite end at the low point of the front hopper joint area. The ends of the frame members 1632, 1634 located at the low point of the front hopper joint area 1550 are joined together at a joint 1636 located about midway between the first and second side wall portions 1544, 1546, where stresses on the tank caused by internal pressures are thought to be low. The joint 1636 can be formed by welding the frame members 1632, 1634 together or by any other suitable method. In addition, the frame members 1632, 1634 can be joined to the tank 1520 by welding or any other suitable method.

As shown in FIG. 21, the rear external frame 1622 includes first and second frame members 1642, 1644 that extend downward from the rear hopper joint area 1552. The first frame member 1642 extends from one end at the high point of the rear hopper joint area 1552 adjacent the first side wall portion 1544 to an opposite end at the low point of the rear hopper joint area. Likewise the second frame member 1644 extends from one end at the high point of the rear hopper joint area 1552 adjacent the second side wall portion 1546 to an opposite end at the low point of the rear hopper joint area. The ends of the frame members 1642, 1644 located at the low point of the rear hopper joint area 1552 are joined together at a joint 1646 located about midway between the first and second side wall portions 1544, 1546, where stresses on the tank 1520 caused by internal pressures are thought to be low. The joint 1646 can be formed by welding the frame members 1642, 1644 together or by any other suitable method. In addition, the frame members 1642, 1644 can be joined to the tank 1520 by welding or any other suitable method.

In the illustrated embodiment, the external frames 1620, 1622 are positioned at locations that are thought to have a minimal impact on the drag coefficient of the trailer 1510 in use. The front external frame 1620 extends externally of the tank 1620 at a location that is substantially covered by a tractor (not shown) connected to the trailer 1510 and/or a trailer nosecone 1650 (FIG. 15). When a tractor pulls the trailer 1510 in the forward direction, the rear external frame 1622 is located in a low pressure zone in the immediate wake of the tank 1520, where it causes minimal drag. Thus, the external frames 1620, 1622 suitably reinforce the bottom of the tank 1620 at the front and rear hopper joint areas 1550, 1552 without obstructing the flow of materials into the hoppers 1524 or significantly increasing the drag coefficient of the trailer 1510.

As can be seen, the frames 1560, 1562, 1564, 1620, 1622 provide a lightweight structure for reinforcing the tank 1520

against internal pressures. The low weight of the reinforcing structure enhances the fuel efficiency of the trailer. In addition, the placement of the frames **1560**, **1562**, **1564**, **1620**, **1622** in the interior **1532** of the tank **1534** and in covered external locations lowers the drag coefficient of the trailer **1510**. Thus, it is believed that several aspects of the illustrated tank structure improve the fuel efficiency of the trailer **1510** and lower the cost of using the trailer to transport material without compromising the strength of the tank **1520**.

It should be understood from the foregoing that, while particular embodiments of the invention have been illustrated and described, various modifications can be made thereto without departing from the spirit and scope of the present invention. Therefore, it is not intended that the invention be limited by the specification; instead, the scope of the present invention is intended to be limited only by the appended claim.

What is claimed is:

1. A pneumatic tank trailer comprising:

a tank having front and rear ends spaced apart along a longitudinal axis, the tank comprising:

a plurality of hoppers each having a top end portion and bottom end portion, the top end portions of adjacent hoppers arranged next to each other and defining hopper joint areas, the bottom end portions of the hoppers being spaced apart along the longitudinal axis of the tank,

a tank wall extending along the longitudinal axis of the tank and defining an interior of the tank, the tank wall including opposite first and second side wall portions and a top wall portion extending between the first and second side wall portions, the first and second side wall portions of the tank having bottom edge portions that are joined to the top end portions of the hoppers, and

a plurality of internal frames joined to the tank in spaced apart relationship along the longitudinal axis of the tank to support the tank against internal pressures therein, each internal frame comprising a bottom portion joined to a respective hopper joint area of the tank, opposite first and second side portions joined to the first and second side wall portions of the tank, respectively, and a cross joist portion extending between the opposite side wall portions of the tank in spaced apart relationship with the bottom portion of the respective internal frame and the top wall portion of the tank; and

a carriage connected to and supporting the tank for movement over a road;

wherein the bottom portion, the opposite first and second side portions, and the cross joist portion of each frame extend substantially in the same plane.

2. A pneumatic tank trailer as set forth in claim **1** wherein the top wall portion of the tank and bottom end portion of the hoppers are vertically spaced apart by a tank height, the cross joist portion of each internal frame being vertically spaced apart from the bottom end portion of the hoppers by at least two-thirds of the tank height.

3. A pneumatic tank trailer as set forth in claim **1** wherein each internal frame further comprises a top portion joined to the top wall portion of the tank, the top portion being spaced apart from the cross joist portion of the respective frame.

4. A pneumatic tank trailer as set forth in claim **1** wherein each of the internal frames comprises a plurality of frame members that are joined together to form the respective internal frame.

5. A pneumatic tank trailer as set forth in claim **4** wherein the frame members of each internal frame are welded together.

6. A pneumatic tank trailer as set forth in claim **4** wherein each hopper joint area has a curved shape extending from a first high point adjacent the first side wall portion of the tank to a low point about midway between the first and second side wall portions of the tank to a second high point adjacent the second side wall portion of the tank.

7. A pneumatic tank trailer as set forth in claim **6** wherein the plurality of frame members of each internal frame include frame members having adjoining ends adjacent the first and second high points of the respective hopper joint area.

8. A pneumatic tank trailer as set forth in claim **7** wherein said adjoining ends are spaced apart between the first and second high points of the respective hopper joint area and the respective cross joist portion.

9. A pneumatic tank trailer as set forth in claim **4** wherein the plurality of frame members of each of the internal frames includes a top frame member extending along the top wall portion of the tank and having a first end joined to another of the plurality of frame members adjacent first wall portion and second end joined to another of the plurality of frame members adjacent the second wall portion.

10. A pneumatic tank trailer as set forth in claim **9** wherein said first and second ends of the top frame member are joined to a central frame member.

11. A pneumatic tank trailer as set forth in claim **10** wherein the central frame member forms the cross joist portion.

12. A pneumatic tank trailer comprising:

a carriage for movement over a road; and

a tank connected to and supported by the carriage and having front and rear ends spaced apart along a longitudinal axis, the tank comprising:

a plurality of hoppers each having a top end portion and bottom end portion, the top end portions of adjacent hoppers being arranged next to each other and defining hopper joint areas, the bottom end portions of the hoppers being spaced apart along the longitudinal axis of the tank, and

a tank wall extending along the longitudinal axis of the tank and defining an interior of the tank, the tank wall including opposite first and second side wall portions and a top wall portion extending between the first and second side wall portions, the first and second side wall portions of the tank having bottom edge portions that are joined to the top end portions of the hoppers, and

a plurality of internal frames joined to the tank in spaced apart relationship along the longitudinal axis of the tank to support the tank against internal pressures therein, each of the internal frames being longitudinally aligned with a respective hopper joint area and extending circumferentially around the tank interior, each internal frame having a bottom portion joined to the respective hopper joint area, first and second side portions joined to the first and second wall portions, respectively, and a top portion joined to the top wall portion, each internal frame comprising a plurality of frame members that are joined together to form the respective internal frame, at least some of the internal frames extending circumferentially around the tank interior and continuously contacting the tank wall and respective hopper joint area.

13. A pneumatic tank trailer as set forth in claim 12 wherein each internal frame comprises a plurality of joints at which two of the respective frame members are joined together, the joints being circumferentially spaced apart around the tank interior at locations of the tank that experience low stress when an internal pressure is exerted on the tank.

14. A pneumatic tank trailer as set forth in claim 12 wherein each internal frame comprises a bottom frame member forming the bottom portion of the respective internal frame.

15. A pneumatic tank trailer as set forth in claim 14 wherein each hopper joint area has a curved shape extending from a first high point adjacent the first side wall portion of the tank to a low point about midway between the first and second side wall portions of the tank to a second high point adjacent the second side wall portion of the tank, each bottom frame member having first and second ends located adjacent the first and second high points of the respective hopper joint area, respectively.

16. A pneumatic tank trailer as set forth in claim 15 wherein each internal frame further comprises a central frame member, the central frame member having a first end joined to the first end of the bottom frame member at a joint located adjacent the first high point of the respective hopper joint area and a second end joined to the second end of the bottom frame member at a joint located adjacent the second high point of the respective hopper joint area.

17. A pneumatic tank trailer as set forth in claim 16 wherein each internal frame member comprises a cross joist portion extending between the side portions thereof in spaced apart relationship with the top and bottom portions thereof, the central frame member forming the cross joist portion of the respective internal frame.

18. A pneumatic tank trailer as set forth in claim 16 wherein each internal frame comprises a top frame member that is joined to the central frame member thereof and forms the top portion of the respective frame.

19. A pneumatic tank trailer as set forth in claim 12 wherein the plurality of frame members are joined together by welding.

20. A pneumatic tank trailer comprising:

a carriage for movement over a road; and

a tank connected to and supported by the carriage and having front and rear ends spaced apart along a longitudinal axis, the tank comprising:

a plurality of hoppers including a front hopper adjacent the front end of the tank and a rear hopper adjacent the rear end of the tank, each of the hoppers having a top end portion and bottom end portion, the top end portions of adjacent hoppers arranged next to one another and defining hopper joint areas such that the bottom end portions of the hoppers are spaced apart along the longitudinal axis of the tank; and

a tank wall extending along the longitudinal axis of the tank and defining an interior of the tank, the tank wall including a front wall portion defining the front end of the tank, a rear wall portion defining the rear end of the tank, opposite first and second side wall portions, and a top wall portion extending between the first and second side wall portions, the first and second side wall portions of the tank having bottom edge portions that are joined to the top end portions of the hoppers, the front wall portion being joined to the top end portion of the front hopper at a front joint area and the rear wall portion being joined to the top end portion of the rear hopper at a rear joint area;

an internal frame for each hopper joint area, each internal frame being joined to the tank in longitudinal alignment with the hopper joint area and extending circumferentially around the tank interior;

a front frame joined to the tank in longitudinal alignment with the front joint area and extending circumferentially around the tank interior, the front frame having an internal portion extending inside the tank along the first side wall portion, top wall portion, and second side wall portion of the tank wall and an external portion extending underneath the tank along the front joint area; and a rear frame joined to the tank in longitudinal alignment with the rear joint area and extending circumferentially around the tank interior, the rear frame having an internal portion extending inside the tank along the first side wall portion, top wall portion, and second side wall portion of the tank wall and an external portion extending underneath the tank along the rear joint area.

* * * * *