Ammeraal Beltech
Innovation & Service in Belting

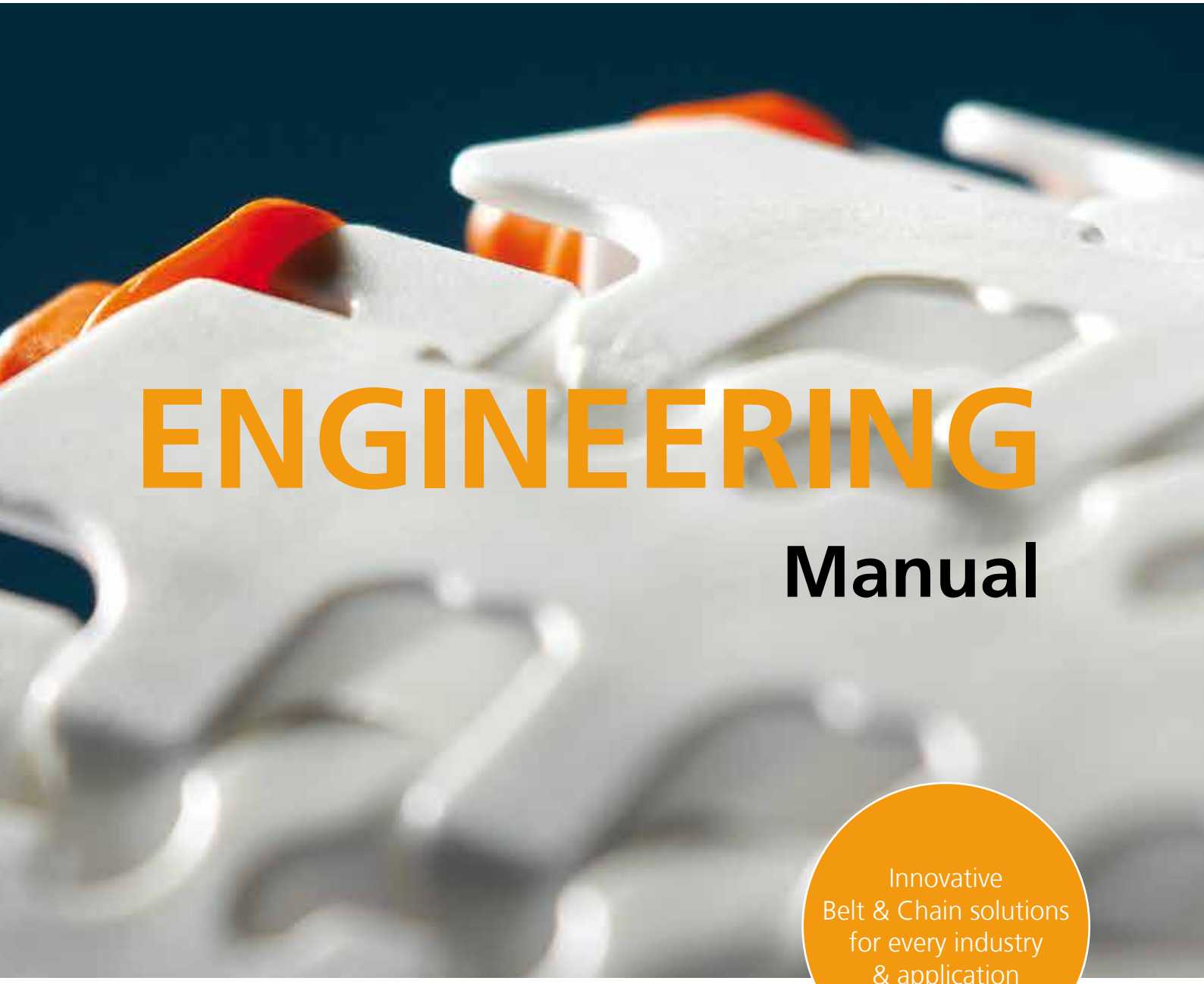

ENGINEERING
Manual

Innovative
Belt & Chain solutions
for every industry
& application

uni chains

Engineering Manual

Innovative Belt and Chain solutions for
every industry & application

Section 1

Introduction 7

Section 2

Belt and Chain Selection

Belt and Chain System Selection Process **8**

Belt System Surface Options **9**

Section 3

Design Guidelines

Basic Factors affecting Belt/Chain Lifetime **14**

Environmental Considerations **14**

Warnings **15**

Basic Conveyor Requirements and Considerations **16**
Dimension definitions 17

Drive Concept **18**
Shaft Selection 18
Torsion Loading 18
Aligning the Shafts 18
Retaining Sprockets 19
Intermediate Bearings 19
Rollers as Idle Shafts and Sprocket replacements 20
Drive Types 20

Straight running Conveyors **21**
Elevating Conveyors **21**
Incline Conveyor 21

Sideflexing Conveyors **24**
Sideflexing Chains 24
Sideflexing Chains, single Track 24
Sideflexing Chains, multiple Tracks 24
Sideflexing Modular Belts 25
Basic L-Shape 25
How does a sideflexing Belt work 25
True Pitch in outside Radius 26
Load Line 26
Reducing overall Dimensions for sideflexing Belt Conveyors 27
Placing the Drive 27
Load & Speed Properties 28
Precautions with Catenary Sags for sideflexing Belts 28
Mounting of Sprockets 29

Spiral Conveyors **30**

Section 3

Transfer Guidelines **31**
Side Transfer 31
Inline Transfer 31
90 degree Transfer 31
End Off/End On 32
Dead Plates 32
Finger Plates 33
Roller Transfer 33

Special Design Guidelines **34**
Gripper Conveyors 34
Alpine (Serpentine) Conveyors 34
Pasteurizers & Blanchers 35
Vacuum Conveyors 35
Long Conveyors 36
Carousel (endless) Conveyors 37
Thermal Expansion and Contraction 37
Expansion due to Water Absorption 38
Slip Stick/Surging/Pulsation 38
Chordal Action 39

Wearstrip and Support **40**
Straight running Chains, single Tracks 40
Straight running Chains, multiple Tracks 41
Sideflexing Chains, single Tracks 42
Sideflexing Chains, multiple Tracks 43
Sideflexing Superflex Chains, open version 44
Sideflexing Superflex Chains, closed version 45
uni Flex Chains 46
Belt Carryways and Returnways 47
Tracking & Control Systems for Sideflexing Belt 48
Returning Belt with Product Supports 50
Anti-sag Carryway Wearstrip Configuration 50
Take-up Methods 51
Control of Belt Length 51
Back Tension 54
Special Take-up Arrangement 54
Compressd Belt Take-up 55
Driving Terminals 55

Section 4

Materials

Chain and Belt Material Listing and Properties **56**
Plastic Materials, Temperature Range, Load Index and FDA 56
Steel and Stainless Steel 57
Plastic materials 58
Factors 62
Friction Factors 62
Temperature Factors 62

Section 5

Calculations

Chain Calculations **63**
Tensile Forces 63
Temperature and Speed dependent Tensile Force 63
Conveyor with straight running and sideflexing Chains 64
Conveyor with Inclination 65
Serpentine 66

Belt Calculations **68**
Tensile Forces 68
Conveyor with Inclination 69
Reinforcement of Belt Systems 71
Expansion and Contraction of the Belt 72
Determining Number of Sprockets for Belt Systems 72

General Calculations **74**
Catenary Sag 74
Dimensioning of the Motor 75
Dimensioning of the Shaft (Steel) 76
Control of Shaft Deflection of the Shaft under Stress 78

Section 6

Installation, Maintenance and Troubleshooting

Installation Guidelines **80**
Maintenance Guidelines **80**
Replacement of Conveyor Parts **80**
Cleaning Guidelines **81**
Troubleshooting Guidelines **82**

Section 7

Appendix

Conveyors with Turn Discs **94**
Conversion of Units (metric/imperial) **96**
Calculation Factors **97**
Load-Speed Relations **100**
Temperature Factors **103**
Belt Elasticity **104**
Glossary **106**
Chemical Resistance Chart **112**
Technical Data Sheet for Belt/Chains Applications (metric) **137**
Technical Data Sheet for Belt/Chains Applications (imperial) **139**

The uni-chains product range offers the world's largest product range of innovative and flexible conveyor chains and belts.

The uni-chains product range builds on the development and manufacturing of

- Slat Top chains in steel and plastic
- Crate chains for heavy loads
- Plastic chains with molded inserts
- Belts in many variations, which can be assembled into wide flat belts with various accessories to meet the application need
- Chains and belts in special materials
- Chain and belt sprockets in various materials

This manual offers to instruct the user how to properly select a uni-chains product for an application and how to properly apply the uni-chains product in the design and fabrication of the conveyor. The uni-chains product line is divided into two separate groups: uni Slat Top Chains and uni Plastic Modular Belts. In general, chains are molded in certain widths and have one hinge with a SS pin that pulls the load.
Belts, on the other hand, can be built out of small pieces in a "brick-lay" type pattern to achieve basically any width. Belts have many hinges that pull the load and, therefore, a belt gets stronger as it gets wider. Since there are some inherent differences between the two, certain sections of this manual will be specific to one type or the other. These sections will be specifically noted.

Belt and Chain System Selection Process

Many factors must be considered when selecting a belt or chain for an application. It may be helpful to remember the acronym PPLESC as a guide to which information is important. PPLESC stands for Product, Process, Layout, Environment, Standards and Commercial Factors. With this information you can make an informed belt or chain selection for your application. Some details on these are shown below:

Product
- Weight
- Size
- Shape
- Structure
- Product Temperature

Process
- Required speed
- Accumulation of the products
- Heating
- Cooling
- Washing
- Drying
- Temperature
- How are the products loaded on to the belt (Pushed sideways? Dropped from above?)
- Sideways product movements on the belt

Layout
- Inclining/declining
- Straight running
- Sideflexing
- Twisting
- Required width
- Transfer zones
- Physical space for installation
- Length of sections
- If sideflexing: Radius in the curves and the angle of the curve

Environment
- Surrounding temperature
- Chemicals (e.g. acid, cleaning agents)
- Abrasive elements dust/sand/glass
- Water/Humidity

Standards
- FDA or similar approval needed on the material (Food contact)
- USDA Meat and Poultry Approval needed
- USDA Dairy approval needed
- NSF Approval needed

Commercial factors
- Most cost effective product for the job
- Desired lifetime
- Acceptable pricing level to the customer

Once you have the above information you can use it to select the proper belt. First, chose the right type of chain or belt – straight running or sideflexing. All uni-chains belts and chains can be used in straight running applications. However if the conveyor must sideflex the designer must be sure to select a sideflexing belt or chain.

Next, select the pitch of the belt. Pitch is the most defining characteristic of a belt or chain. Smaller pitch reduces chordal action and vibration, has less noise, can achieve tighter transfers and use smaller sprockets. Larger pitch belts are usually stronger and thicker for more wear and impact resistance.

Surface should also be considered. uni-chains offers many surface openings, textures and accessories to suit every application. This includes the design of the underside of the belt or chain which can be important when considering cleaning, wear or support. The choice of a chain or belt for your application will depend on which has the available surface, top and bottom that are needed in your application. On the next page you will find some examples of top and bottom surface designs that are available.

The track system should also be considered (especially with uni Slat Top Chain) as the uni-chains product range is composed of both tabbed and non-tabbed belts and chains. This is especially important on the return side of the conveyor as this requires different methods of support.

The drive method should also be considered. There are different types of drive configurations depending on space limits or on conveyor function. The uni-chains product range offers both conventional sprocket driven systems as well as horizontal sprocket drive systems for race track/endless designs or multi-tier drive applications.

Next, chose the right material for your application. Choice of material is dependent on many factors including among others strength, wear resistance, chemical resistance, temperature limits, impact, speed and agency approvals. In general, uni-chains belts are offered in three standard materials: PP, PE, Acetal (POM), and our chains are offered in several grades of Acetal (POM). Refer to the material section for more information on selecting the proper material (pages 56-62).

Finally, select a belt or chain of sufficient strength for your application. After going through the process above, ensure that the chain or belt is strong enough to pull the desired load. See the calculation section to determine this or contact uni-chains engineering for assistance. It may be a case where the designer must choose a stronger material or a larger pitch belt after getting to this step. You may need to go through these steps multiple times to arrive at the best solution.

Belt System Surface Options

Openings	Surfaces								
	Flat	Grip	No Cling	Reduced Contact	Rib Top	Roller Top	Rough Top	Rubber Top	V-style
0%	uni M-QNB C uni Light C uni S-MPB C uni QNB C uni CNB C uni SSB C uni RTB uni CPB C uni MPB C uni X-MPB C uni XLB C	uni MPB G | GE	uni S-MPB NE uni MPB N | NE			uni RTB M1 uni RTB M2 uni RTB M2 Rubber	uni Light uni QNB Rough uni CPB Rough uni XLB C Rough	uni M-QNB Rubber Top uni Light Rough Rubber Top uni QNB Rubber Top uni CPB Rubber Top uni MPB	uni XLB M2 V8
10%	uni Light								
14%	uni M-SNB M3								
15%							uni XLB 15% Rough		
16%	uni Flex ONE					uni MPB RO			
18%	uni CNB uni BLB uni MPB								
20%	uni SNB M2 uni MPB						uni CPB 20% Rough	uni SNB M2 Rubber Top	
22%	uni Light uni CNB uni Light EP fine-meshed uni Light EP fine-meshed with reinforcement links uni MPB					uni MPB PRR			
23%	uni OPB 4V uni OPB 4V fine-meshed				uni OPB 4V 23% RIB				
29%	uni SSB								
32%	uni SSB								

Belt System Surface Options

Openings	Surfaces								
	Flat	Grip	No Cling	Reduced Contact	Rib Top	Roller Top	Rough Top	Rubber Top	V-style
34%	uni SNB M2			uni SNB M2 34%	uni SNB M2 34% Rib				
36%	uni OPB 4V			uni L-SNB	uni L-SNB Rib				
37%	uni M-TTB			uni M-TTB CS					
40%				uni M-PNB M1					
43%	uni Flex ASB uni Flex ASB T			uni Flex ASB CS uni Flex ASB CS T					
47%	uni Flex SNB C uni Flex SNB CR uni Flex L-ASB uni Flex L-ASB R uni Flex L-ASB T							uni Flex SNB CR Rubber Top uni Flex SNB C Rubber Top	
55%				uni Flex SNB L uni Flex SNB W uni Flex SNB WT uni Flex SNB WO					
66%				uni OWL					
Vacuum	uni M-QNB Vacuum								

Belt System Surface Options

Flat Surface

uni M-QNB
Pitch 12.7 mm (0.50 in.)
Surface opening 0%

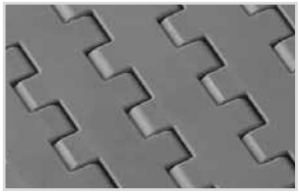

uni Light
Pitch 19.05 mm (0.75 in.)
Surface opening 0%

uni Light
Pitch 19.05 mm (0.75 in.)
Surface opening 10%

uni M-SNB M3
Pitch 12.7 mm (0.50 in.)
Surface opening 14%

Belt System Surface Options

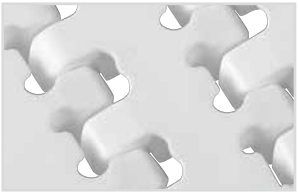

uni Flex ONE
Pitch 38.1 mm (1.50 in.)
Surface opening 16%

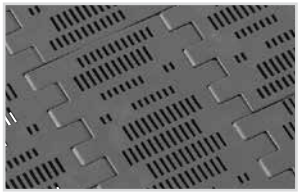

uni BLB
Pitch 50.8 mm (2.00in.)
Surface opening 18%

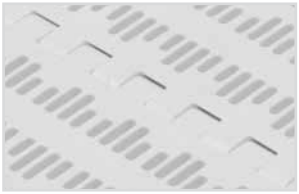

uni MPB
Pitch 50.8 mm (2.00 in.)
Surface opening 18%

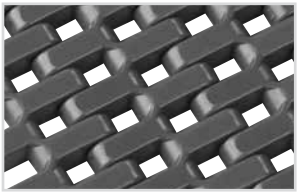

uni SNB M2
Pitch 25.4 mm (1.00 in.)
Surface opening 20%

uni CNB
Pitch 25.4 mm (1.00 in.)
Surface opening 22%

uni SSB
Pitch 38.1 mm (1.50 in.)
Surface opening 32%

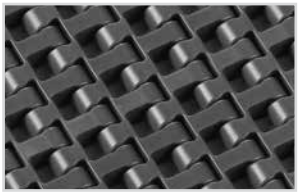

uni M-TTB
Pitch 38.1 mm (1.50 in.)
Surface opening 37%

uni Flex ASB
Pitch 25.4 mm (1.00 in.)
Surface opening 47%

uni Flex SNB CR
Pitch 25.4 mm (1.00 in.)
Surface opening 47%

Grip Surface

uni MPB G
Pitch 50.8 mm (2.00 in.)
Surface opening 0%

uni MPB GE
Pitch 50.8 mm (2.00 in.)
Surface opening 0%

No Cling Surface

uni S-MPB N
Pitch 25.4 mm (1.00 in.)
Surface opening 0%

uni S-MPB NE
Pitch 25.4 mm (1.00 in.)
Surface opening 0%

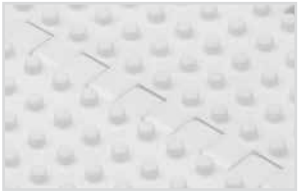

uni MPB N
Pitch 50.8 mm (2.00 in.)
Surface opening 0%

uni MPB NE
Pitch 50.8 mm (2.00 in.)
Surface opening 0%

Belt System Surface Options

Reduced Contact Surface

uni L-SNB
Pitch 50.0 mm (1.97 in.)
Surface opening 36%

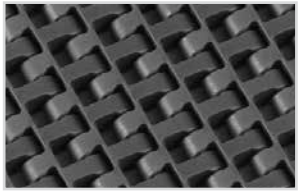

uni M-TTB CS
Pitch 12.7 mm (0.50 in.)
Surface opening 37%

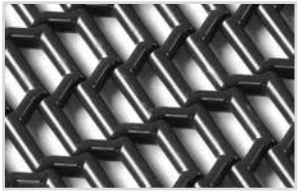

uni M-PNB M1
Pitch 12.7 mm (0.50 in.)
Surface opening 40%

uni Flex ASB CS
Pitch 25.4 mm (1.00 in.)
Surface opening 43%

uni Flex SNB L
Pitch 25.4 mm (1.00 in.)
Surface opening 55%

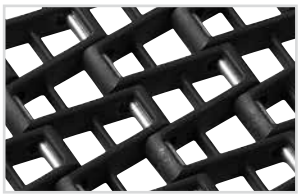

uni OWL
Pitch 27.9 mm (1.10 in.)
Surface opening 66%

Rib Top Surface

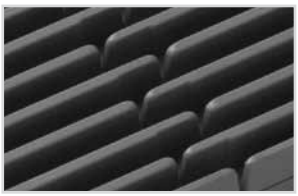

uni OPB 4V Rib
Pitch 50.0 mm (1.97 in.)
Surface opening 23%

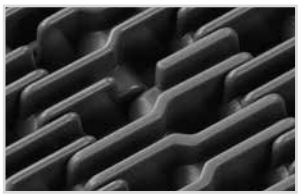

uni SNB M2 Rib
Pitch 25.4 mm (1.00 in.)
Surface opening 34%

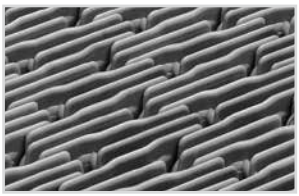

uni L-SNB Rib
Pitch 50.0 mm (1.97 in.)
Surface opening 37%

Roller Top Surface

uni RTB M1
Pitch 50.8 mm (2.00 in.)
Surface opening 0%

uni RTB M2
Pitch 50.8 mm (2.00 in.)
Surface opening 0%

uni RTB M2 Rubber
Pitch 50.8 mm (2.00 in.)
Surface opening 0%

uni MPB RO
Pitch 50.8 mm (2.00 in.)
Surface opening 16%

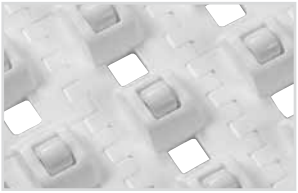

uni MPB PRR
Pitch 50.8 mm (2.00 in.)
Surface opening 22%

Belt System Surface Options

Rough Top

uni CPB Rough
Pitch 50.8 mm (2.00 in.)
Surface opening 0%

uni XLB Rough
Pitch 63.5 mm (2.50 in.)
Surface opening 0%

uni XLB 15% Rough
Pitch 63.5 mm (2.50 in.)
Surface opening 15%

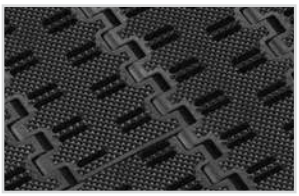

uni CPB Rough
Pitch 50.8 mm (2.00 in.)
Surface opening 20%

Rubber Top

uni M-QNB Rubber Top
Pitch 12.7 mm (0.50 in.)
Surface opening 0%

uni Light Rough Rubber Top
Pitch 19.05 mm (0.75 in.)
Surface opening 0%

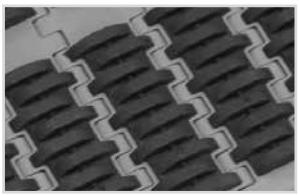

uni QNB Rubber Top
Pitch 25.4 mm (1.00 in.)
Surface opening 0%

uni CPB Rubber Top - RB1
Pitch 50.8 mm (2.00 in.)
Surface opening 0%

uni CPB Rubber Top - RB2
Pitch 50.8 mm (2.00 in.)
Surface opening 0%

uni MPB Rubber Top
Pitch 50.8 mm (2.00 in.)
Surface opening 0%

uni SNB M2 Rubber Top
Pitch 25.4 mm (1.00 in.)
Surface opening 20%

uni Flex SNB CR Rubber Top
Pitch 25.4 mm (1.00 in.)
Surface opening 47%

V-Style

uni XLB M2 V8
Pitch 63.5 mm (2.50 in.)
Surface opening 0%

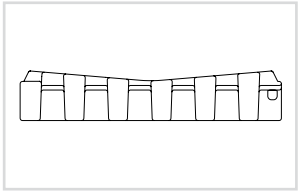

uni XLB M2 V8
Pitch 63.5 mm (2.50 in.)
Surface opening 0%

Vacuum

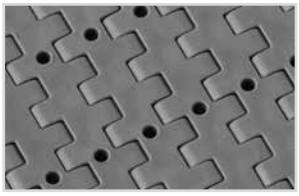

uni M-QNB Vacuum
Pitch 12.7 mm (0.50 in.)
Surface opening 0%

Basic Factors affecting Belt/Chain Lifetime

Shorter Lifetime

- Less lubrication
- Smaller sprocket diameter
- Smaller pin diameter
- Less wearstrip support
- Higher speed
- Higher load
- More dirt
- Greater number of curves
- Greater number of start/stops
- Greater number of times front or backflexing

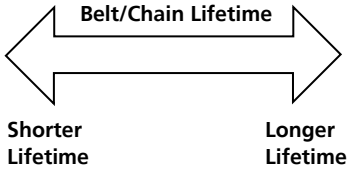

Longer Lifetime

- More lubrication
- Larger sprocket diameter
- Larger pin diameter
- More wearstrip support
- Lower speed
- Less load
- Less dirt
- Fewer number of curves
- Fewer number of start/stops
- Fewer number of times front or backflexing

In the design stage it is helpful to consider some of the basic factors that have an effect on belt/chain lifetime and know how they can be used to increase the overall lifetime of the belt or chain. The chart above gives a general indication of some of the more important parameters and their general effect on overall belt life.

Environmental Considerations

Successful operation of uni-chains products requires their ability to stand up to the environment that they are used in. The information below comes from previous (similar) experiences and customer input.

Specifying the right belt for the application requires a good knowledge of the environmental conditions. Below are some important environmental considerations to keep in mind when choosing a belt. Forms are available at the back of this manual that include a more complete list of most of the possible application parameters that could apply.

1. Chemical Degradation
The effect of chemicals on the performance of the supplied conveyor components must be considered at initial selection of the materials. Chemical degradation can cause premature failure of the conveyor components.

2. Radiation Degradation
Radiation from ultraviolet rays, microwaves, or any other form of radiation that can cause premature failure should be considered at the time of selection.

Ultraviolet Light
UV radiation is split into three different types: UVA, UVB and UVC. UVA and UVB are major contributors to damage caused by the sun. UVC is almost completely absorbed by the ozone layer but is found in artificial sources such as mercury arc lamps and germicidal lamps.

The Main Effects on Polymers exposed to UV
One of the main problems when considering the effect of UV rays on polymers is the intensity related to stratospheric ozone, clouds, altitude, the position of the sun height (time of day and time of year), and reflection. It is also important to remember that actual ambient temperature and humidity will accelerate any effect of the

intensity level. All types of UV can cause a photochemical effect within the polymer structure, which can be either a benefit or lead to degradation of some sort to the material.

Degradation
The main visible effects are a chalky appearance and a color shift on the surface of the material and the component surface becomes brittle. This predominantly affects the surface layer of the material and is unlikely to extend to depths above 0.5 mm into the structure. However, stress concentrations caused by the highly brittle nature of some plastics may lead to a complete failure of the component.

UV-C and uni-chains Products
UV-C will most commonly be used in the meat cutting belt applications. This is because infection through contact with surfaces is one of the most common causes of infection of foodstuffs with bacteria and mould. Generally it is conveyor belts, and in particular meat cutting belts, in the meat processing industry that are affected by this and therefore have to address the UV-C protection. This special UV-C light is usually generated from a special UV light source/radiation box. This UV-C radiation box is positioned at the meat cutting belt. Often it will be placed under the belt in the area just before the belt turns to the topside. We have divided the UV protection package into two groups:

1. UV Package (standard package)
This protection package can be used when our product is going to be used outside, where it can be exposed to UV light from the sun. In this UV package we are using our standard protection system.

2. UV-C Package
We also offer an extended UV protection where we combine our standard system with another UV absorber to get the optimal UV protection. This package comes into consideration when our product is being exposed to extreme UV light. At the moment we only provide this UV-C protection for acetal (POM) material.

3. Abrasive Requirements
Wear on chain parts highly depends on the wearstrip hardness and roughness. Generally in abrasive conditions, the harder the surface hardness and the lower the roughness of the wearstrip, the better wear resistance that combination will have. This is because the particles will embed in the softer material and wear away at the harder material.
Some examples of abrasive particles include flour, salt, sugar, sand, paper dust, glass and dirt.

4. Moisture
All plastic materials absorb water from the surroundings, but very often it is not a major factor – except when dealing with the Nylon (PA) material. Here there can be a considerable change in dimension depending on the environment where the part is placed. The absorption of water causes the polyamide part to swell and thus leads to an increase in volume. Refer to the section on Expansion due to water absorption (page 39). Tables for expansion due to water absorption can also be found in this section for coefficients so calculations can be made.

5. Temperature
Temperature relates to conveyor design and performance, within our published recommended temperature ranges, at progressive levels from 20º C (68º F) as follows: At low temperature the plastic selected will be harder, very brittle, and less resistant to impact and deflection. At high temperature plastic will be 70-85% weaker, softer with less resistance to abrasion, and greater deflection will be possible, although at lower stresses. Refer to the Calculations in Temperature Dependent Tensile Forces (page 60) or contact uni-chains engineering for assistance.

Warnings

Fire
uni-chains plastic products are, unless clearly specified, made from materials which support open flame. Products made from acetal (POM) material when so exposed, will emit toxic fumes. uni-chains plastic products should therefore not be exposed to extreme temperatures or open flame. Special care should be taken when undertaking repair work particularly when welding at a conveyor if the conveyor is fitted with plastic chains or belts.

Personal Protection
Always use safety glasses when mounting or repairing chains and belts and while securing or removing pins. Use only suitable tools in good conditions. The weight of some products calls for the use of safety shoes. When mounting/dismounting or repairing chains or belts on a conveyor, the motor must be turned off.

Design Safety Guidelines
Most plastic products will loose their mechanical properties if exposed to the sun or ultraviolet beams, which can lead to chain or belt breakage. This can also happen if the products are exposed to strong chemicals. Generally this is a problem with pH values lower than 4.5 or higher than 9.

Always make sure that there is enough space in the conveyor frame to allow chains and belts to retract or expand when exposed to temperature variations. Never exceed the maximum or minimum temperatures given for the uni-chains product range.

Care should be taken with high chain/belt speeds with which friction can lead to heating and subsequently melting of chain/belt as well as wearstrips. Do not exceed speeds recommended for the uni-chains product range.

Use only original uni-chains sprockets with uni-chains belts and chains.

When constructing conveyors it is important always to include sufficient cover around the moving parts to prevent fingers and clothing from being caught up in the machinery. We can also supply uni-chains safety chains and sideflexing belts which leave minimal gaps when turning through curves this makes our safety chains and belts incredibly safe.

Basic Conveyor Requirements and Considerations

There are specific guidelines that go along with each conveyor that a designer should know well. Below are the basic requirements of a conveyor and an explanation of their design. Throughout this manual specific details are mentioned that expand on each of these topics. With these basic guidelines you can start to design a conveyor or retrofit an existing conveyor.

1. Clearance
The amount of clearance between the chains, belts, wear strips, channels, or any guide component must be sufficient to accommodate any temperature or fabrication variation and construction tolerance that may exist. Adequate clearance is defined as absence of binding or fit interference between moving parts and supporting surfaces (wearstrips etc.) that would cause additional resistance than what is required to support the chain/belt and load being conveyed. This condition must be held through the complete operating range of the conveyor under all conditions that it is exposed to.

2. Wearstrip Alignment
Alignment between all chain/belt and bearing surfaces must be consistent and accurate to avoid adding resi-stance (fit-up binding, etc.) or creating a situation where premature wear of the chain/belt or wearstrip occurs. Particular attention must be given to where the chain/belt changes direction (curves up, down or side to side). This is where the chain tension combines with the product/chain weight to increase the bearing surface requirements. At these locations we specify a minimum radius that the chain/belt will turn in either the side or backflex direction (see product catalog data).

3. Speed
For speeds over 30 m/min. (100 ft/min.) the use of a soft start motor control is recommended. High speed conveyors must also be designed with wear strips that will not melt when the speed is combined with the load at the bearing surfaces. Lubrication of the chain/belts can also be very beneficial in high speed conveyors. Speed is a very complicated issue, and it is difficult to come up with guaranteed figures. This is mainly because of the many variables from one conveyor to another.

These variables could include:
- Surface roughness of the wearstrips
- Actual speed vs. designed speed
- Load
- Cooling/lubrication
- Surrounding temperature
- Actual friction
- Possibility to conduct the heat away

Sideflexing belts must be treated as a special situation and there are charts available for speed/load determination on these. uni-chains' engineering can recommend wear strip materials that will stand up (to most conditions).

4. Conveyor Length
The maximum length of a conveyor can be limited by the effects of elastic surging even if the belt is below the tension limit. Surging/pulsation occurs when the chain/belt stretches and the spring force stored becomes strong enough to accelerate a portion of the belt and product. This portion of the belt is accelerated at a rate that is equivalent to the force stored in the chain/belt. It is independent of belt width and is very dependent on belt resistance and the spring force constant of the chain/belt type and material. Surging can be a problem in some cases where product stability is a factor or where fatigue

loading is a problem. It is dependent on conveyor configuration, length, product weight and speed, among other factors. As a general rule surging can be an issue for straight running conveyors 20 m (65 ft) center distance or greater and for sideflexing conveyors 12 m (39.4 ft), surging is more of an issue at slower speeds than at high speeds.

5. Sprockets
Sprockets should be located in a position relative to the chain/belt such that they engage so that the sprocket pitch diameter intersects the pin center line. Chains typically use one sprocket per shaft. For belts the rule of thumb for the minimum number of sprockets is the width of the belt (in inches) divided by six (rounded up) and plus one per shaft. If this result is an even number it is common practice to add another sprocket to make an odd number and have a true center sprocket. More sprockets will be required based on belt tension and temperature. Some belts have sprocket paths that must be followed when locating the sprockets on the shaft. The center sprocket on both shafts is generally fixed and the others are allowed to move laterally with the expansion and contraction of the belt as it changes with temperature.

Dimension Definitions

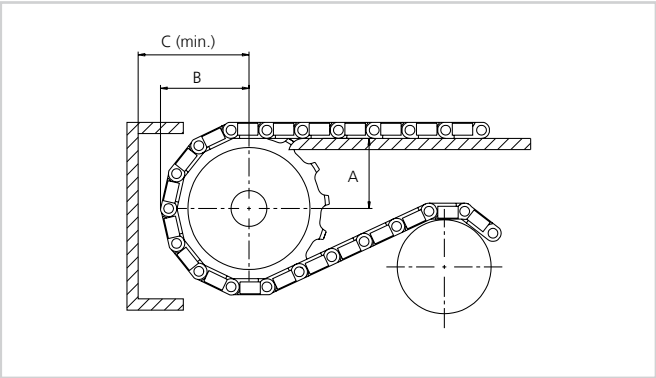

Figure 3-1

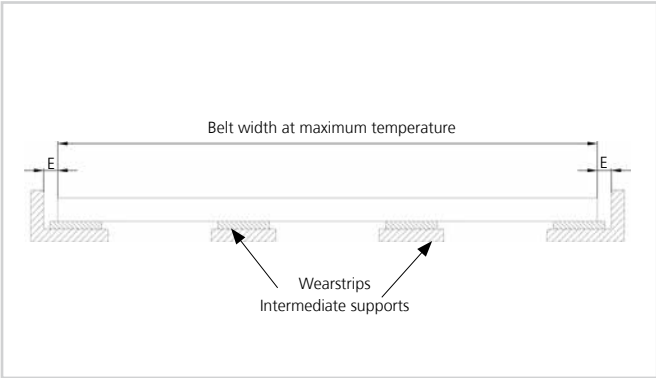

Figure 3-2

A – The vertical distance from the centerline of the shaft and sprocket to the top of the wear strip. This distance will remain the same until the chain/belt engages with the sprocket. After engagement this distance will vary as the pins will raise and lower and this effect is called Chordal Action. Refer to section on Chordal Action (page 39). See figure 3-1.

$A = p_d \times 0.5 \times \cos(180/z) - l$

B ± (3.0 mm) 0.13 in. – The horizontal distance from the centerline of the shaft to the top surface of the belt. See figure 3-1.

$B = p_d \times 0.5 + (t-l)$

C – The minimum distance between the center of the shaft and any framework. This is determined by sprocket diameter. Care should be taken that there is adequate clearance between the frame and product supports, side guards or other accessoires on the belt or chain.
See figure 3-1.

$C_{min} = b + 6$

E – The clearance between the side of the frame and the edges of the chain/belt. The minimum of 3 mm (0.12 in.) should always be measured when the belt is at maximum operating temperature. This will ensure that the belt is at its maximum width and enough clearance will always exist. See figure 3-2.

Note: This recommended clearance is for straight running belts only. Guide clearance for sideflexing belts should be calculated on an individual basis. See figure 3-2.

See the calculations section (pages 63-79) in the back of the manual to determine how much expansion your belt/chain will undergo.

p_d = Pitch diameter of drive/Idler sprocket, mm (in.)
z = Number of teeth drive/Idler sprocket
t = thickness of the belt including possible attachment, mm (in.)
l = Distance from the bottom of the belt to center of the pin, mm (in.)

Drive Concept

Shaft Selection

Conveyors can use either round or square shafts. Square shafts have a few advantages over round shafts. To drive the sprockets round shafts use keyways where square shafts drive the sprockets with a square bore on their own. Square shafts can transmit higher loads and have less deflection than round shafts with keyways. Sprockets with square bores will slide more easily on square shafts than round bored sprockets do on keyways and square bored sprockets are easier to align. Square shafts are recommended over round shafts when feasible.

Square shafts are recommended on long and big shafts (sq 60 x 60 mm) (sq 2.5 x 2.5 in.) or bigger. Choosing the correct shaft size is crucial for chain/belt life. Torsion or bending in the shaft will misalign the sprockets so they do not engage the chain/belt properly and cause greater wear. This can also cause uneven forces in the belt that can lead to breakage or pin migration. Calculations for proper shaft size can be found in Dimensioning of Shaft in Calculations (page 73).

Torsion Loading

Since the drive shaft is only attached to the motor on one end and the other end is resting in a bearing, torsion occurs in the shaft. As the motor engages the end of the shaft that it is rigidly attached to, the shaft twists under the load of the chain/belt and the product. The larger the sprockets, the greater the torsion load on the shaft. If a particular size shaft is desired and the torque to be absorbed is greater than the maximum torque on shaft, use smaller sprockets and recalculate the torque on the shaft. Since the sprocket diameter has been decreased, the motor's RPMs must be increased to maintain the same speed. Other methods to address torsion include placing a motor on both ends of the shaft or placing the motor in the center of the shaft.

Aligning the Shafts

To ensure smooth operation without problems the conveyor must be absolutely level and the shafts must have the correct placement with respect to each other. For straight running conveyors the drive and idle shaft must be parallel to each other. For sideflexing belts the drive shaft must be perpendicular to the straight section after the final curve and the idle shaft must be perpendicular to the straight section before the first curve. Shaft alignment can be checked using the methods shown below.

In the method figure 3-4 on the left, the distance "l" must be the same at both sides and the length of the two diagonals "d" must be the same.

The method figure 3-5 to the right can be useful for long conveyors. You can chose the measure of "a" and "b" as you wish. The point is that the two "c" values have to be identical.

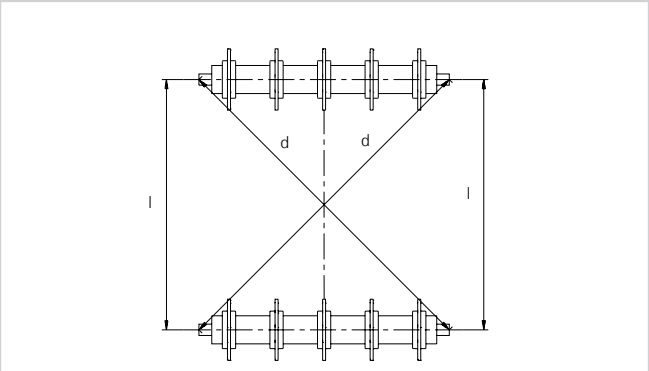

Figure 3-4

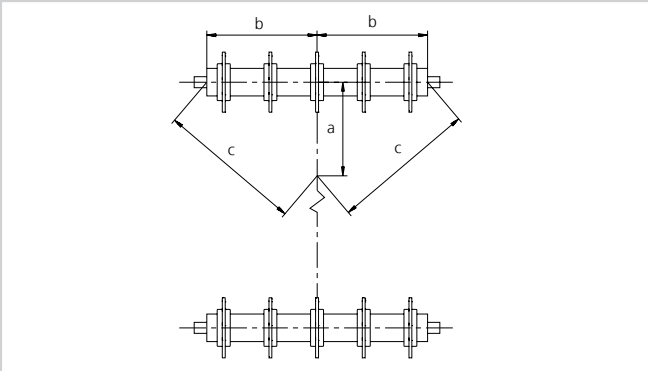

Figure 3-5

Note: The center line must be very accurate. The alignment of the sprockets must be performed in both the drive and idler ends.

Drive Concept

Retaining Sprockets

The center sprocket on both the drive shaft and idle shaft should be laterally retained to ensure proper belt alignment throughout operation.The other sprockets should be left to move freely along the shaft. This allows the sprockets to move with belt expansion and contraction from changes in operating temperature.

The uni-chains product range offers retainer rings for both round and square shafts. Refer to our belt catalog for more information.

Intermediate Bearings

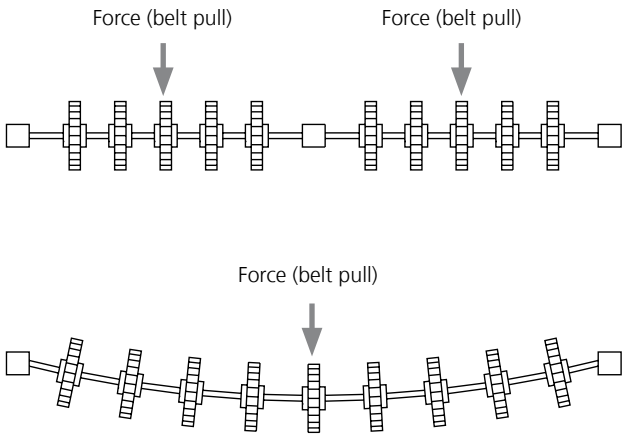

Figure 3-6

An intermediate bearing is placed in the center of the shaft to reduce shaft deflection. Excessive shaft deflection as seen on figure 3-6 can cause disengagement between belt and sprocket as well as shaft breakage.

Note: Drawing has been exaggerated for understanding purposes.

When working with a wide conveyor or a conveyor with a high tensile load the shaft must be large enough to handle the load without deflection, or intermediate bearings should be considered. In cases where a sufficiently large diameter shaft is not an option, intermediate bearings are a must. An intermediate bearing is placed at the center of the drive shaft and its purpose is to reduce shaft deflection. Minimal shaft deflection will ensure sprocket and chain engagement.

Mounting of intermediate bearings should be noted since intermediate bearings are usually split journal bearings. The bearings should be aligned so that the split is perpendicular to the carryway. If they are not mounted in this alignment, the reinforcement strength of the bearings is reduced significantly. Intermediate bearings also require significant space to install, so increasing the sprocket diameter may be necessary. When increasing the sprocket size, keep in mind if there is a transfer at this point. Refer to Shaft Calculation Section (page 78).

Drive Concept

Rollers as Idle Shafts and Sprocket Replacements

In some cases it is more advantageous to use rollers instead of an idler shaft with sprockets. One case where this should be used is, for example, where the designer wants to avoid using intermediate bearings. With wide conveyors with higher loads, a roller can withstand more load and can reduce the need for intermediate bearing(s).

Note: If a roller is used on the idle shaft it does not provide the benefit of the horizontal tracking of the sprockets. Measures can be taken to guide the belt such as edge guide wearstrips on the side frame or a flange on the sides of the roller to track the belt.

Drive Types

In practice three types of drive units are commonly used for conveyors. The most widely used is the gear motor. In industries where the demands for hygiene are very strict (e.g. the food industry) drum motors are sometimes used. As a specialty hydraulic motors are often used for packing lines on industrial trawlers. Also used are soft starting motors and fluid couplings for high speed conveyors.

Soft starting Motors and Fluid Couplings
Starting a high speed conveyor without proper acceleration can wear out the belt/chain at an accelerated rate. Soft starting motors and fluid couplings help to gradually accelerate the conveyor to its operational speed. This reduces initial belt tension and the stress between the links and pins.

Geared Motors

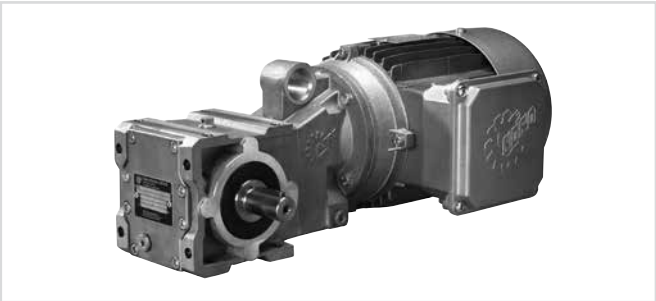

Figure 3-8

The main advantage of the geared motor is the wide variety of sizes and designs available at a reasonable price.
Be aware that the efficiency of certain types of worm gears can be very low.

Advantages	Disadvantages
- Low price - Wide variety - Large moments transfer	- Bulky (at the side or under the conveyor)

Drum Motors

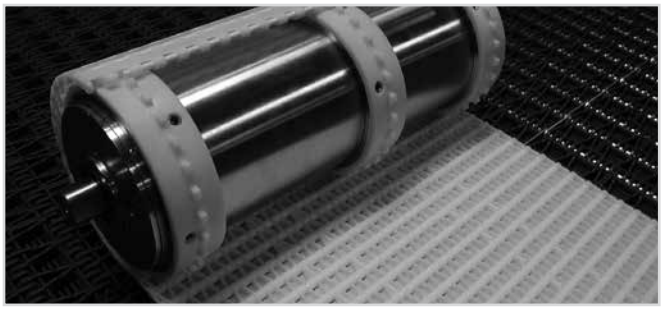

Figure 3-7

Advantages	Disadvantages
- No protruding ends - Easy to clean - Cost effective - High efficiency - No maintenance	- Need for keeping a spare on hand - Secure heat generation - No usage for high loads

Hydraulic Motors

Figure 3-9

Advantages	Disadvantages
- Large load capacity compared to the dimensions	- Noisy - Requires a hydraulic supply station

Straight running Conveyors

The simplest design of a conveyor is a straight running conveyor with a single drive unit. In certain applications, multiple drive units are required, such as a combiner or decombiner.

Elevating Conveyors

The principles in the next section apply for both belts and chains.

Incline Conveyor

The typical inclining conveyor is characterized by the products being elevated from one level to another. The possible inclination angle is determined by the friction coefficient between the product and the chain or belt. Depending on the product type (friction against chain/ belt) products can be elevated at an angle of 3-4° without sliding back. If the angle exceeds 3-4° it is usually necessary to use rubber inserts, product supports or AmFlights to prevent the products from sliding down. Depending on the characteristics of the products rubber inserts can overcome angles of 20-40°. Figure 3-10. Testing is always recommended to determine the possible incline angle for a particular product/application.

For a typical incline conveyor the drive shaft is located at the top. A take-up device is often used on the idle shaft to help maintain adequate tension on the return side. In some cases it is beneficial to use a flanged roller on the idle shaft rather than sprockets so that excess belt from the return does not bind up at the sprockets. Figure 3-11. The return can be supported with wearstrips, rollers or return shoes.

In general the drive is located at the top and either a take-up system or a catenary sag can be implemented at the bottom.

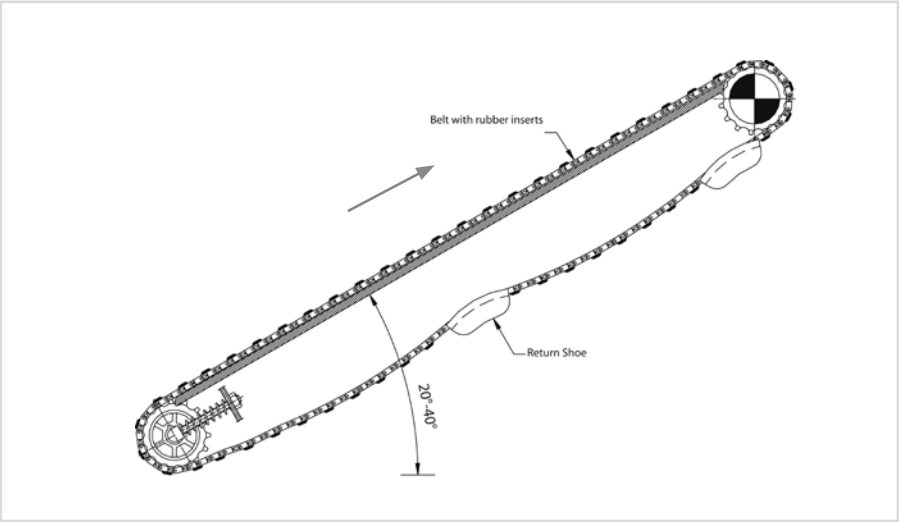

Figure 3-10

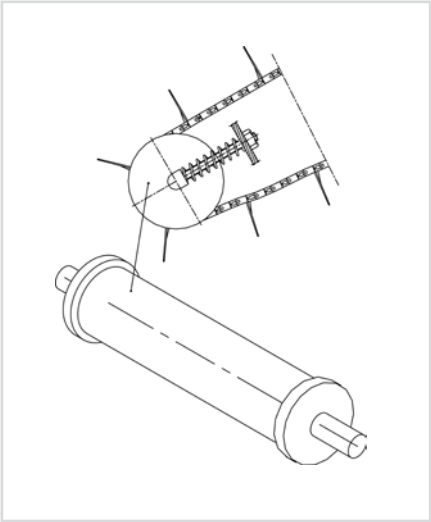

Figure 3-11

Elevating Conveyors

Often incline and decline belts have product supports. Special care must be taken on the return side when product supports are used. See figure 3-12. The most common method is to indent the product supports and support the belt from the edges. For wide belts it is sometimes necessary to support the belt at locations across the width as well as the edges. In that case a gap or gaps across the width can be used. As an alternative it is possible to slide the product supports directly on the return wearstrips, but this causes wear points on the top of the product supports. Also, some chains and belts have bottom tabs which can be used to let the chain or belt hang free from them on the return.

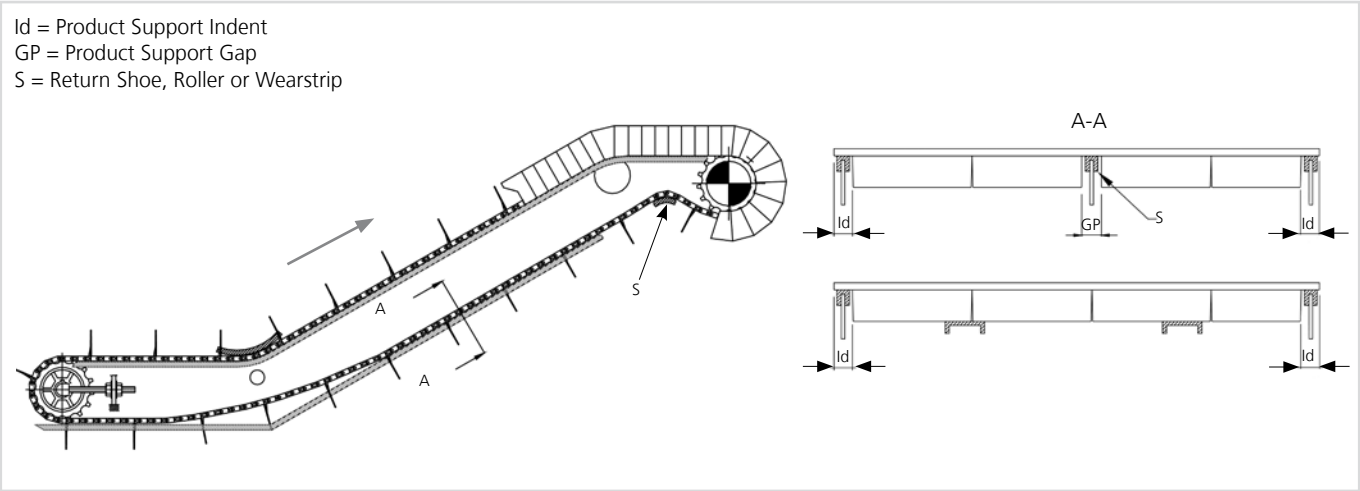

Figure 3-12

With straight product supports, inclines of up to 60° are usually possible. Inclines of 90° or more can often be accomplished in a closed system. Between 60° and 90° it is necessary to use bent product supports in open systems. With bent or cupped product supports (uni MPB) even inclines of 120° are possible.

An incline or decline conveyor may include one or more horizontal sections. Typically there is a horizontal inlet at the lower end where the products are loaded and a horizontal section at the top where the products leave the conveyor. In the areas where the belt transitions from horizontal to incline it is necessary to hold the belt down. This can be done with a roller, wearstrip or hold down shoe. If product supports are used they can be indented or manufactured with gaps as shown in figure 3-13.
If possible a roller hold down is preferred to reduce wear on the support points.

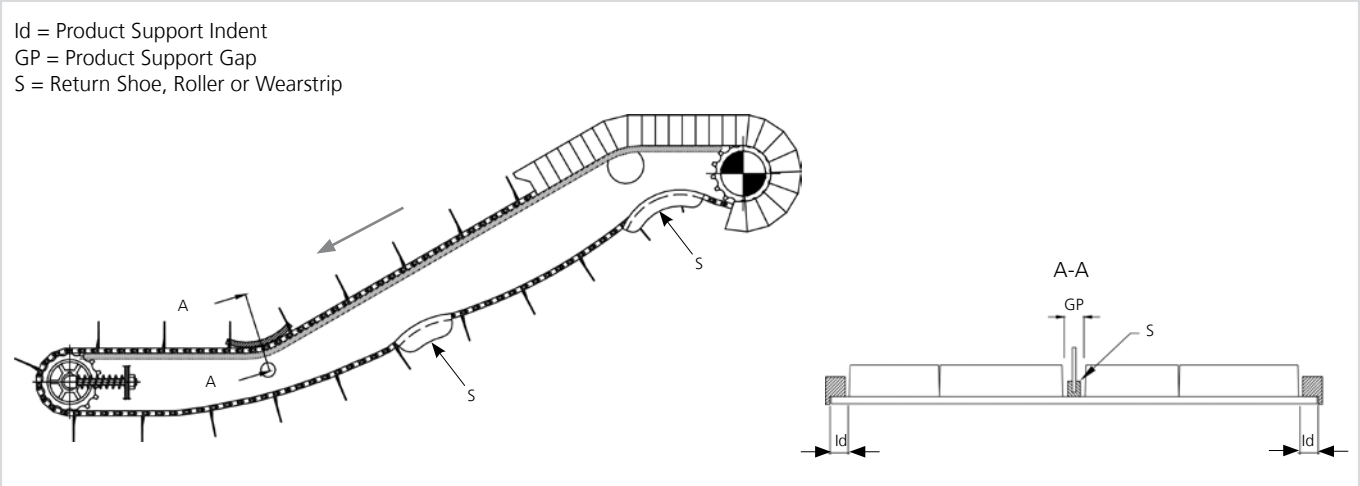

Figure 3-13

Elevating Conveyors

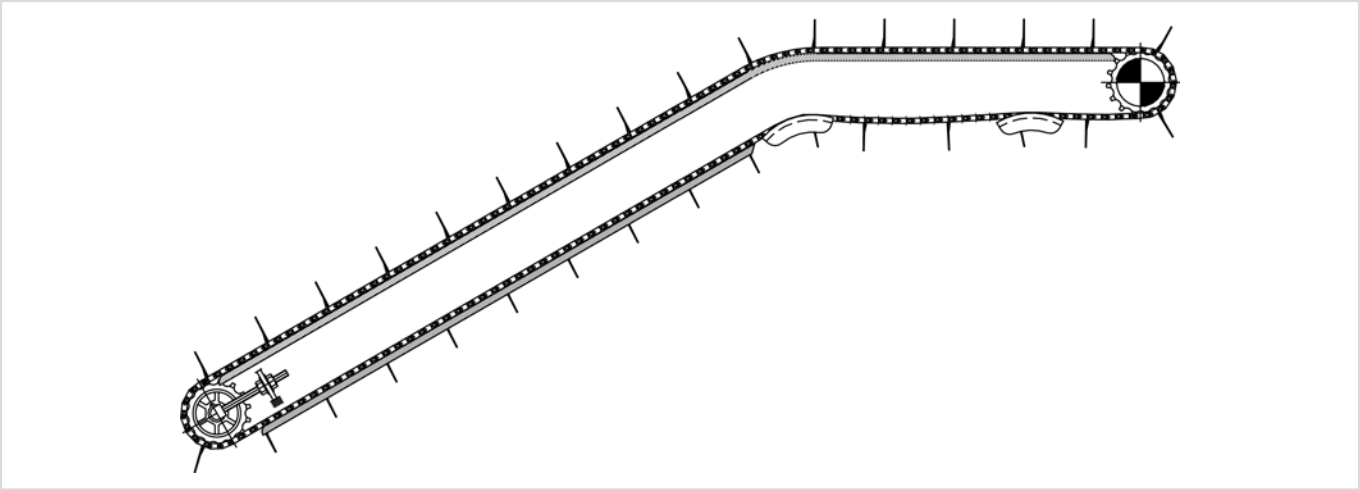

Figure 3-14

Sideflexing Conveyors

Straight running conveyors are still the most common type of conveyors. The optimization of the production layout and the reduction of manual processes, however, require conveyors that can transport products in more than one direction. Sideflexing conveyors can be made with both chain and belt in the different ways shown in figure 3-15, figure 3-16, figure 3-17 and figure 3-18.

Sideflexing Chains

Sideflexing Chains, single Track

Built with - Sideflexing Slat Top Chain

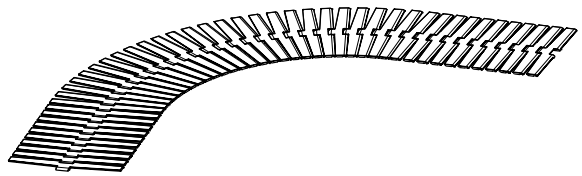

Advantages	Disadvantages
- Simple design - Small footprint - Strength	- Limitations in the widths - Limited product support (the large openings in the outer radius limit the size of the products to be transported) - Safety

Figure 3-15

Sideflexing Chains, multiple Tracks

Built with - Sideflexing Chains, Slat Top Chains or other uni Flex Chains

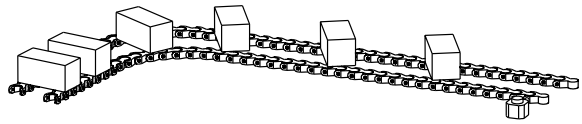

Advantages	Disadvantages
- Small footprint - Strength	- Limited product support - The product orientation changes because of different speeds of the individual chains in the curve

Figure 3-16

Sideflexing Conveyors

Sideflexing Modular Belts

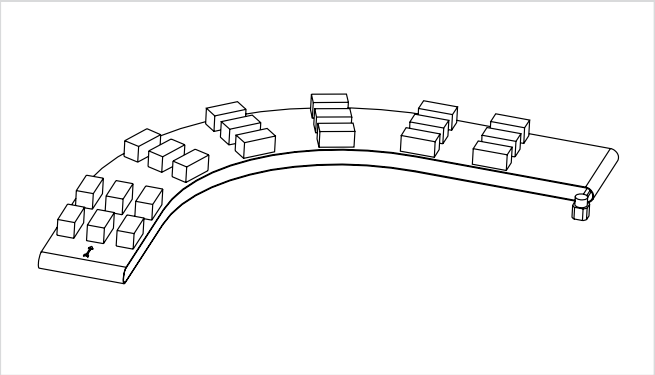

Figure 3-17

Advantages	Disadvantages
- Only one drive station required - No intermediate dead plates - Product orientation is not a affected - Stable product support also of small products - Safety (When the belt turns in the curve there will be no large openings in the belt surface) - It is possible to build wide side-flexing conveyors - Safe belt control. Wearstrips and sprockets secure positive belt control	- Straight sections required before and after curves - Lower strength than chains

Basic L-Shape

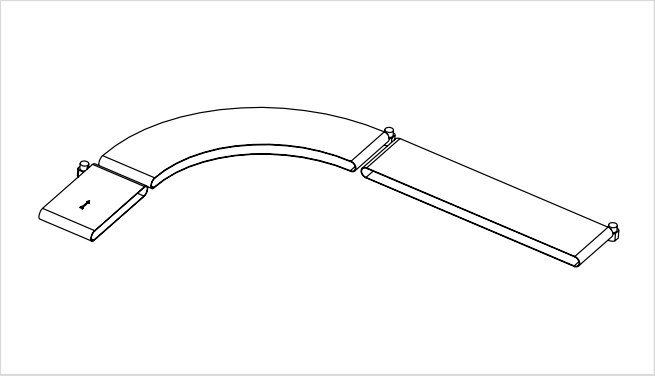

Figure 3-18

How does a sideflexing Belt Work
A simple example of a sideflexing conveyor is the L-shape: Straight section, curve, straight section. The belt runs as a straight running belt in the straight sections. In the curve, the belt pitch compresses at the inner radius to compensate for the difference of the arc length. After the curve, the belt is stretched and runs again as a straight running belt. In the curve section only the outer edge remains at true pitch. This outer section transfers all the tensile forces.

Figure 3-18 shows an L-shape conveyor three sections. With sideflexing modular belts this layout is possible with a single drive.

Sideflexing Conveyors

True Pitch in outside Radius
When the belt travels straight, the pitch is the same over the entire width. The belt is able to distribute the tensile forces across the full width of straight running sections.

When the belt travels in the curve, the pitch will vary over the belt width. Only the outer radius will maintain the original pitch and, therefore only the outer edge is able to transfer tensile forces. See figure 3-19.

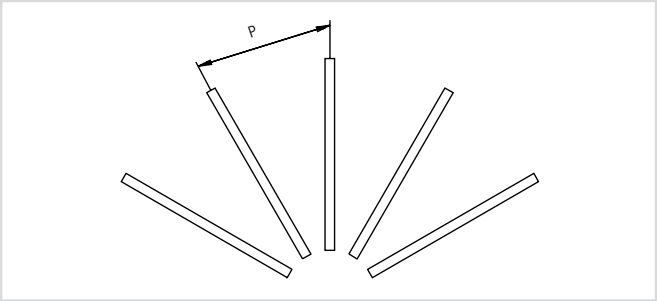

Figure 3-19

Note: When calculating the belt length it is important to use the outer arc length.

Load Line
To understand the function of a sideflexing belt it is important to understand the distribution of the forces in the belt. In a straight running belt the load lines are distributed evenly over the belt width.

In a sideflexing belt the links are compressed in the inside radius and thus cannot absorb any tensile forces. Hence, the entire tensile force must be transferred on the outer radius where the pitch is normal. The illustration figure 3-20 shows the distribution of the tensile forces **"load lines"** in a sideflexing belt.

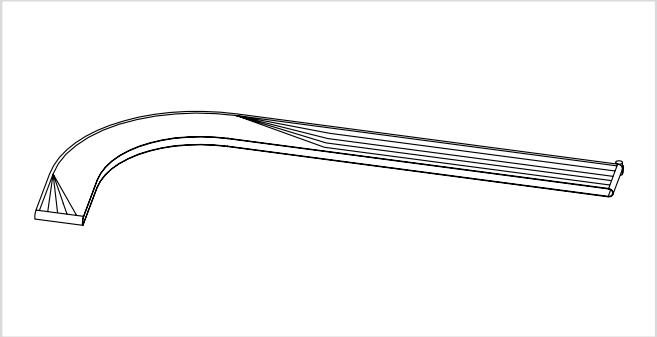

Figure 3-20

In the curve the tensile force will concentrate in the outside radius. After the curve, the tensile force will begin to spread over the entire belt width again in the form of a fan and after a certain length, the forces will again be distributed evenly like in a straight running belt.

In straight running belts, where the tensile force is distributed evenly, the tensile capacity will increase in relation to the belt width.

In a typical sideflexing belt only the outer hinges of the belt can transfer the entire tensile force in curves. Therefore a larger width sideflexing belt will not necessarily have increased tensile capacity in the curve. Some uni-chains sideflexing belts do have the ability to distribute the curve load over some of the outer hinges and, therefore, have different load ratings for different widths. See uni-chains' belt catalog for specific belt values.

Layout following the Load Lines
It is important to observe these load lines when designing the conveyor.

- To ensure correct engagement and optimum drive, the sprockets must be placed where the belt is running straight and the forces are evenly distributed. uni-chains provides recommendations for placing the drive station at a minimum distance from the curve.
This required distance varies by belt type and can be found in the belt catalog or in the design guidelines for the specific belt if available.

- At the idler end it must be ensured that the belt is stretched, so that the pins in the belt are parallel with the idler shaft when they rotate around it. A minimum straight section is recommended before the curve to ensure correct rotation around the idler shaft. This dimension varies by belt type and can be found in the belt catalog or in the design guidelines for the specific belt if available.

- In an S-shaped conveyor it is important that the tensile force is distributed evenly across the belt width between the two curves before it is compressed on the opposite side of the belt. A minimum straight section between two opposite running curves is recommended to ensure a good distribution of the tensile force. This dimension varies by belt type and can be found in the uni-chains belt catalog or in the design guidelines for the specific belt if available.

Sideflexing Conveyors

Reducing overall Dimensions for Sideflexing Belt Conveyors

Reducing Sideflexing Belt Width ratio
Some belts have a smaller belt width turn ratio than others. By selecting a tight radius belt the dimensions of the curved sections are reduced because the outer turning radius is smaller than the standard radius belt.

Reducing Belt Width
All dimensional requirements for a sideflexing belt layout are related to the belt width. If the belt width is reduced the overall dimensions will be reduced as well. There are several ways to do this. For example, using a belt with side tabs or bottom tabs can allow the belt to be narrower than the products conveyed because the product can overhang the edges. Using this narrower belt will make the overall conveyor dimensions smaller.

Split wide Conveyors in two Belts
Another method of reducing the belt width is by splitting a conveyor into two parallel belt lanes. For example two 229 mm (9 in.) wide belts can thus replace a 457 mm (18 in.) wide belt and reduce the space required by 66%. If this option is chosen, attention must be paid to the different speeds of the two belts in the curves and the fact that there is a distance between the two belts.

Placing the Drive

Where to split long Conveyor Layouts
The drive unit must be placed so that the chain/belt is pulled. As a consequence pushing the belt is not recommended.

Belt tension increases as you move from the idler shaft to the drive shaft. On straight sections the tension will double if the belt length is doubled.

In curves, the friction will exponentially increase against the inner radius of the guide rail. It takes more power to pull the belt through a curve. The higher the load on the belt before the curve, the larger the increase in the tension.

When placing the drive it is important to minimize the sections before the curve and maximize the sections after the curve. It is also possible to implement a center drive located close to the curve as a way to reduce tension. See figure 3-21 and figure 3-22.

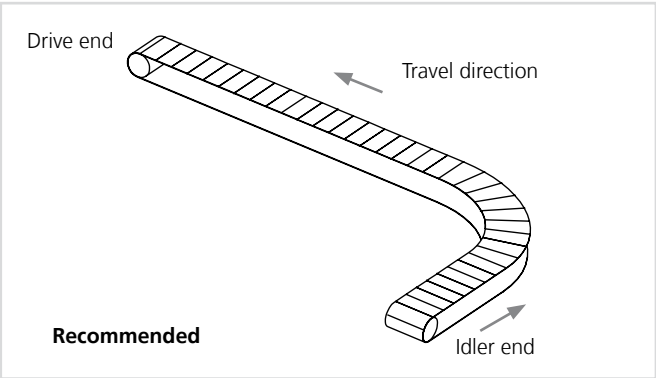

Figure 3-21

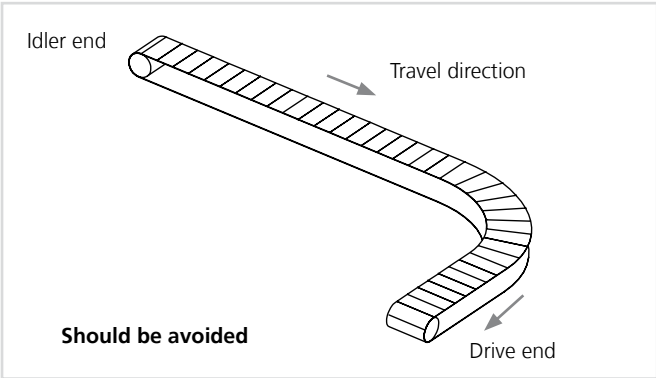

Figure 3-22

Sideflexing Conveyors

Load & Speed Properties

The permissible tensile force of a sideflexing belt depends on the ability of the outer hinges to bear the load or distribute the load. In sideflexing belts, however, the speed is also an essential parameter. Therefore attention should be paid to the maximum permissible tensile forces stated in the catalog as these will decrease as speed increases.

In sideflexing belts there is a great inward radial load in the curve. At the point of contact between belt and wearstrip, heat will occur due to friction. The temperature influences the friction properties of the materials. The friction coefficient will increase as the temperature increases and a higher friction coefficient will result in more heat being generated. It is important to avoid this as it could result in either the belt/chain or the wearstrip melting.

On the basis of numerous tests and data collected from existing applications, uni-chains has established some load/speed relations between our belt types and materials against various wearstrip materials. These are sometimes called Pressure-Velocity (PV) Limits. These load-speed relations can be found in the appendix of this manual. See appendix pages 96 to 98.

Precautions with Catenary Sags for sideflexing Belts

Over time sideflexing belts can elongate more in the loaded side of the belt than the other. Catenary sags and tension rollers must be able to absorb this uneven elongation and care must be taken that the return section can accommodate this.

Sideflexing Conveyors

Mounting of Sprockets

Drive
As mentioned earlier in the majority of sideflexing belts most of the tension will be on the outer radius in the curves and therefore the highest load will also be on the outermost sprockets. The distance between the sprockets on the driving shaft should therefore be smaller for the sprockets placed closest to the outer radius. See figure 3-23.

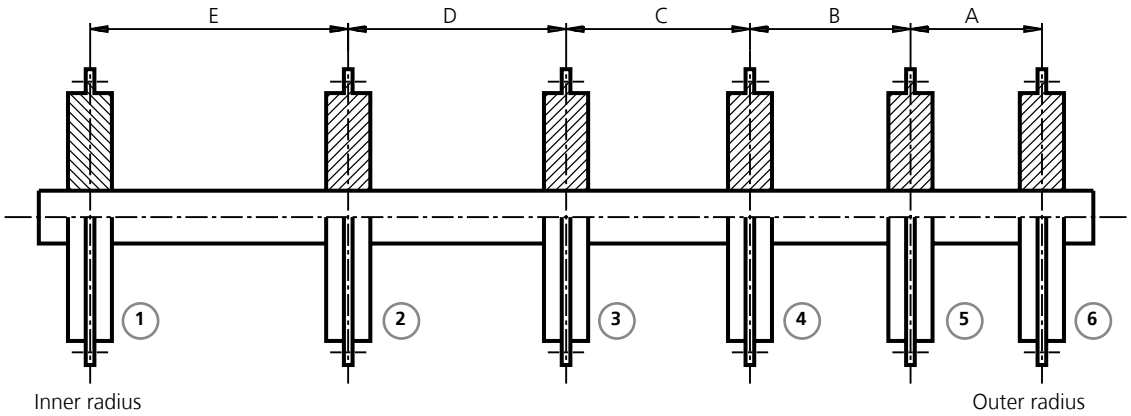

Figure 3-23

Distance between Sprockets
A<B<C<D<E

Sprocket #3
Fixed to the shaft

Sprockets 1, 2, 4, 5, 6
Moving freely axially

Idler End
The idler shaft can be constructed in several different ways. If guidelines are followed for minimum straight sections, sprockets can be used in the same configuration as on the drive shaft. If low noise or tight transfer is required uni-chains recommends that sprockets without teeth are used, i.e. either a disc or a shaft without teeth if support over the entire width is required.

Note: The uni Flex ONE belt is an exception to the above recommendations. Because of the way the load is distributed through this belt the sprockets are always evenly spaced on the belt. Refer to the uni-chains belt catalog for specific sprocket placement instructions.

Spiral Conveyors

Basic Concept
Spirals are often used for continuous processes such as proofing, cooling or freezing. In its simplest form a Low Tension spiral consists of an upright motor driven drum, or cage, around which a sideflexing conveyor belt is wrapped. The conveyor belt moves either up or down in a helical path and is supported by continuous belt support rails fixed to the other frame of the conveyor in a helical path.

The belt is primarily driven by the frictional force between the rotating cage and the inner edge of the belt, and by a secondary drive force, the take up motor that positively drives the belt with sprockets. See figure 3-24.

The secondary drive force applies sufficient pulling force to the conveyor belt to ensure that it wraps around the cage, so that there will be contact between the cage and the inner edge of the belt, and therefore a frictional driving force between the belt and cage.

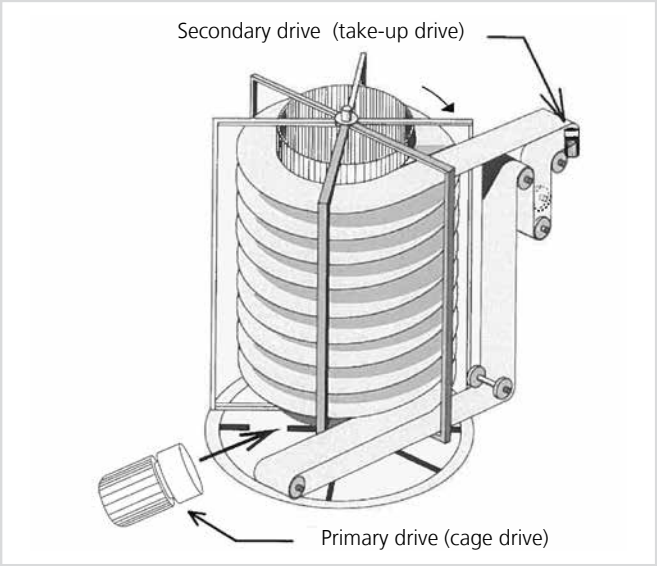

Figure 3-24

Basic Principals of Operation
To understand how a Low Tension spiral works, it can be compared to a simple rope and capstan used to move a ship into a docking area. The capstan turns when the drive motor is turned on. The rope attached to the ship is wrapped several times around the capstan. Nothing will happen until someone pulls the loose end of the rope. When the rope tightens around the capstan, the frictional force of the capstan against the wraps of rope, plus the drive force of the motor driving the capstan will be able to pull the boat into dock. This will continue as long as someone keeps pulling on the rope. See figure 3-25 and figure 3-26. The Low Tension spiral works in a similar manner. One big difference is that the belt (rope) is endless. So we have to have a place for the belt to accumulate, as it gets longer from wear, higher belt tension or temperature changes. We let the belt accumulate right after the second drive, in what we call the belt take up loop. Another difference is that instead of a big load at the end of the rope, we have the load spread all over the belt. The belt has to remain level to carry the product, so we have continuous belt support rails under the belt. Low tension spirals are a big friction machine. They use the friction between the moving cage and the inside edge of the taut belt to provide the drive means. The main drive has to overcome the friction force between the loaded belt and the support rails. How well this all works is a function of the coefficient of friction between belt edge and cage and belt underside and support rails.

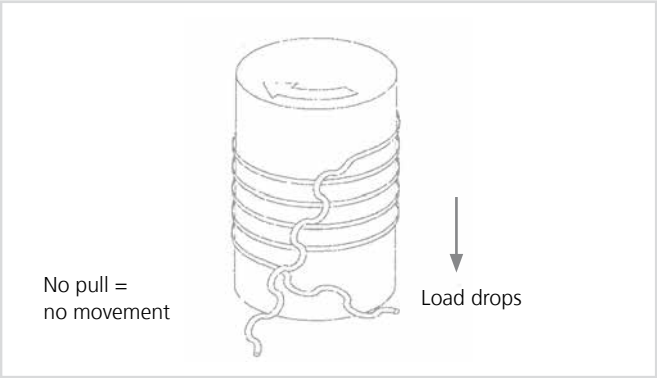

Figure 3-25

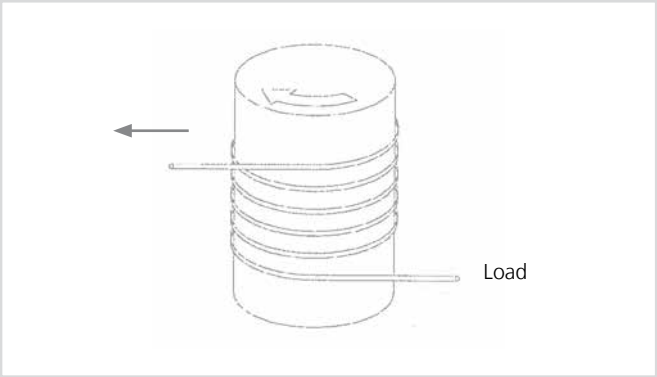

Figure 3-26

General System Design Requirements
For details on basic general system requirements for Low Pull spiral systems using modular belts, please contact uni-chains engineering.

Transfer Guidelines

It is not practical to make a conveyor if you cannot place the products on the conveyor or transfer them at the end of the transport. In practice it is also impossible to build sufficiently long conveyors. So there is usually a need to transfer products from one conveyor to another. Following are different methods to do this.

Side Transfer

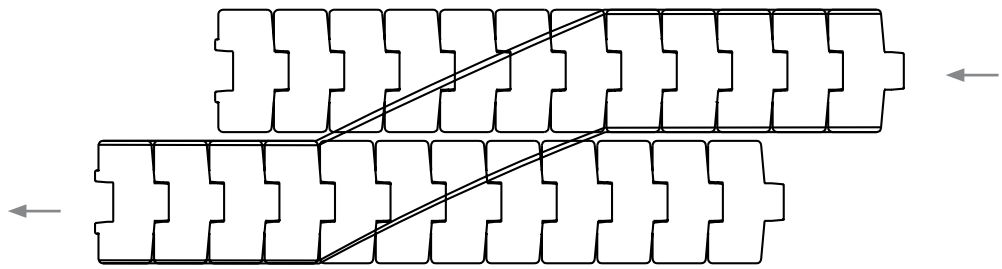

In a side-by-side transfer a guide rail at the side forces the products to change track.

Figure 3-27

Inline Transfer

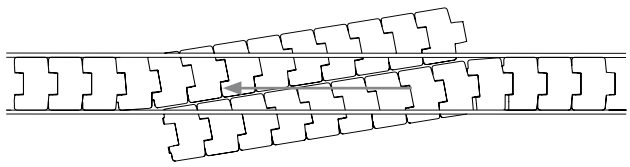

Inline transfers are like side transfers but the guide rail is not bent and the product is not moved laterally. This is much less common than a side to side transfer seen above where the conveyors are parallel and the guide rail is bent. See figure 3-28.

Figure 3-28

90 degree Transfer

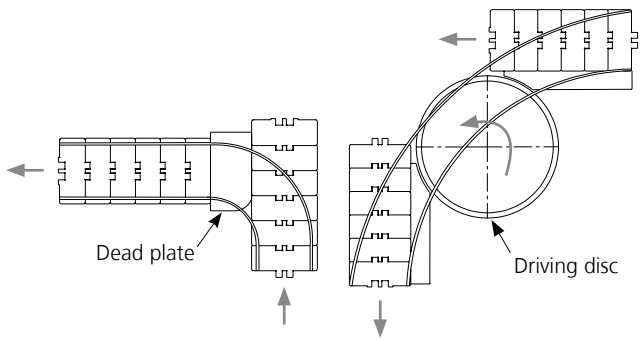

A 90° transfer can be made with guide rails and a dead plate or turn discs. Rollers can be substituted for a dead plate depending on the designers needs. See figure 3-29.

Figure 3-29

Transfer Guidelines

End off/End on

With a nosebar the front flex radius can be reduced as a function of the belt pitch. As a rule of thumb uni-chains recommends using a minimum nosebar diameter of 2 x belt pitch unless specific nosebar dimensions are stated in the uni-chains catalog. uni-chains 0.5 in. pitch belts have been specifically designed for use with nosebars and have a profile on the bottom of the modules so that they contour to the nosebar better. Refer to the uni-chains belt catalog for specific minimum nosebar diameters for these belts. It is possible to do this type of end to end transfer with chains as well, however the transfer point will be much larger because of the greater pitch.
If possible it is always recommended to use a nosebar that can rotate freely (such as a roller) to reduce the friction, noise and wear caused at this point. Due to the usually small diameter and sometimes large belt widths, the deflection can sometimes limit the ability to use a roller. However using a nosebar with small rollers embedded in it or using a roller with support bearings underneath can be a solution to this. See figure 3-30.

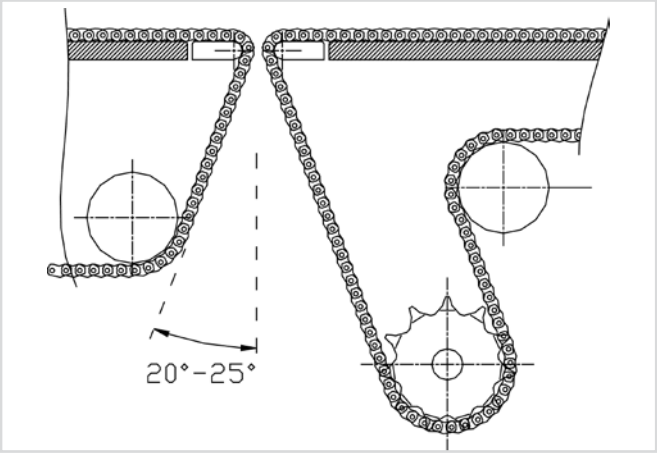

Figure 3-30

Dead Plates

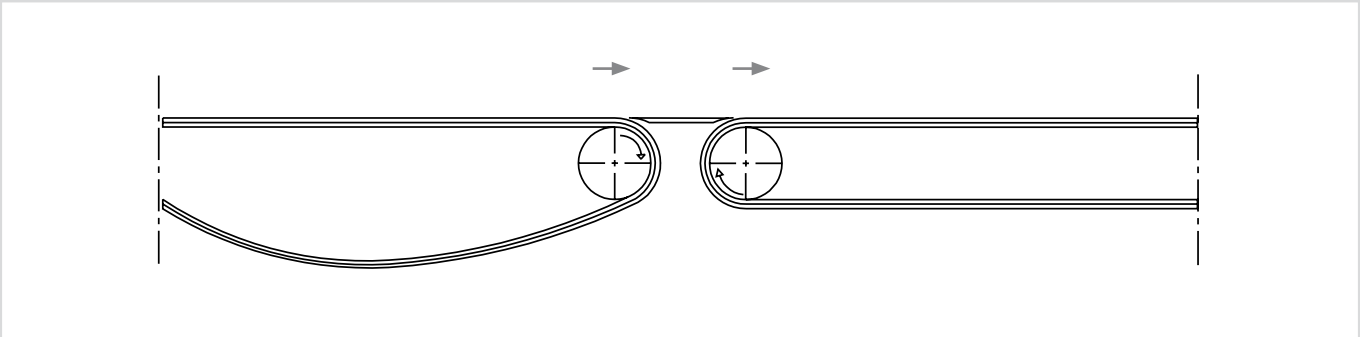

Fig. 3-31

A dead plate is a plate which is placed between two conveyors. See figure 3-31. The back line pressure will push the products onto the dead plate and the next conveyor. If the friction between belt/chain and product is too low compared to the friction between dead plate and product there is a risk that the pattern of the products on the conveyor (e.g. three parallel lines) may be upset by the dead plate.
Because most belts and chains consist of flat modules wrapping around sprockets there will be high and low points on the surface at the dead plate transfer. For this reason a gap (GP) is required between the dead plate and the belt surface to allow these high points to pass through. See figure 3-32.
Note: Curve top belts can be used to reduce this gap. This gap is shown on the diagram to the right. It varies by both belt type and by sprocket size. When determining this gap size the designer should keep in mind that the dimensions of the belt wrapped around the sprocket are equal to the pitch diameter of the sprocket plus the thickness of the belt. The gap must at least be large enough to avoid interference with the top surface of the belt.

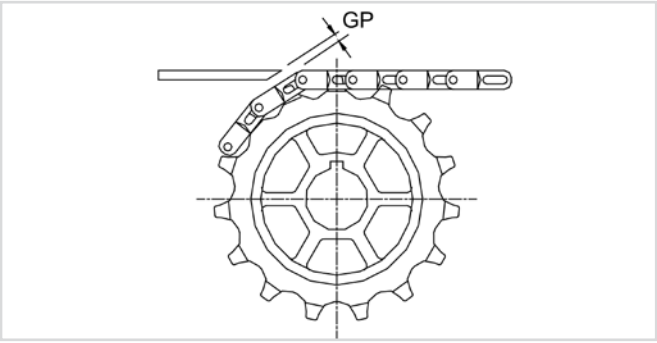

Figure 3-32

Transfer Guidelines

Finger Plates

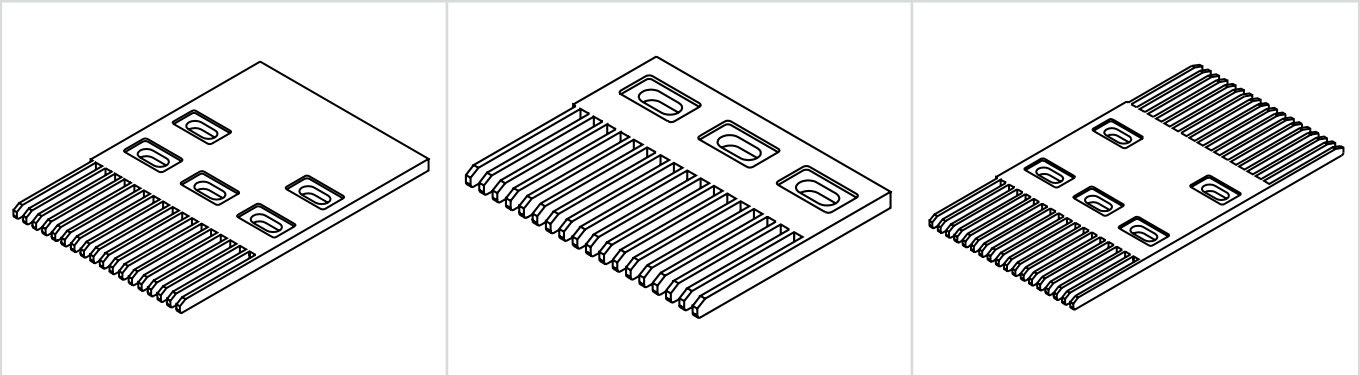

Figure 3-33

Finger plates are a variation of the dead plate. The fingers of the finger plate are inserted between the ribs of the chain/belt, thus eliminating the gap between chain/belt and dead plate. This ensures an even transfer. Most rib belts require the use of their own specific finger plates. These can be found in the uni-chains belt catalog listed as accessories for the appropriate belt.

When mounting finger plates it is important they are allowed to move freely from side to side as the belt expands and contracts. This is why finger plates are supplied with mounting slots instead of round holes. uni-chains recommends using shoulder bolts or other spacers to ensure the bolts do not clamp down too tightly and prohibit the finger plates from being able to move from side to side. See figure 3-33.

Roller Transfer

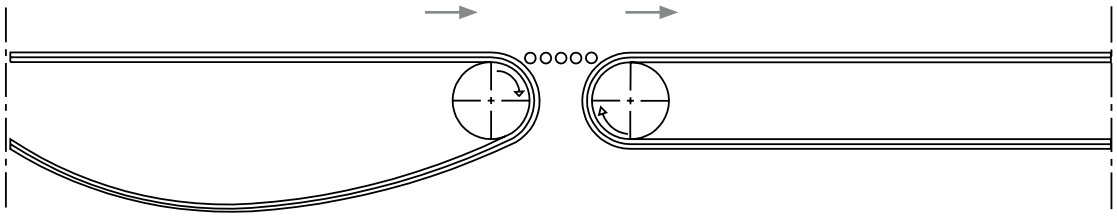

Transfers similar to a dead plate can be made by means of rollers.
This solution means less friction than a closed dead plate. However, the surface is not as even.

Figure 3-34

Special Design Guidelines

Gripper Conveyors

The most commonly used chain type for vertical transport is uni Grip 1873 (G3, G4, G4L and D) which is a Snap-On chain with rubber inserts on a basic roller chain of steel or stainless steel.

When constructing a uni-Grip conveyor it must be ensured that the conveyor capacity and the infeed speed are consistent.

This can be done in several ways:
1. uni-Grip speed > infeed speed
2. An infeed system that ensures distance between the products
3. Choice of a generous bend radius

It is recommended that the conveyor is constructed so that it is possible to adjust the distance between the uni-Grip chains. This enables for adjustment to allow for changes in product size but also control of pressure on the chain and product.

Typical applications for gripper chains could be as follows: (see diagrams below)
- To invert a product
- To allow for a passageway
- Holding a container up-side-down for washing and rinsing
- Elevating or lowering products from one level to another

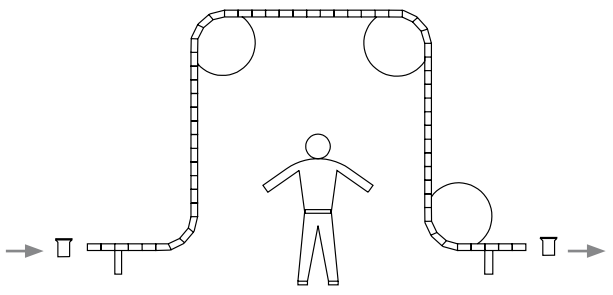

Upside down U-shape for free passage under the conveyor.

Figure 3-35

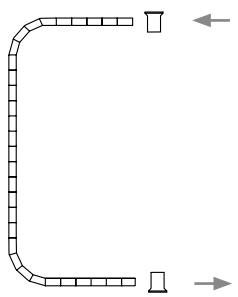

C-shape for bottle turners etc. Invert a product.

Figure 3-36

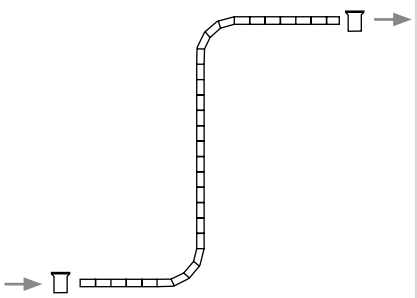

S-shape for transferring items from one level to another.

Figure 3-37

Alpine (Serpentine) Conveyors

Serpentine conveyors are used for transporting products from one level to another. The advantages of the serpentine conveyor are that it is very compact yet with a large capacity because it can be utilized both in the width and the height. See figure 3-38.

Due to the large capacity these conveyors are often used as buffers in the product flow through a facility to avoid production interruptions, such as between a filling machine for coffee and the packing machine.

Figure 3-38

It is necessary to use turn discs in all 180° curves.

The discs should be tilted so that they are flush with the inclination of the plane to which the products are conveyed. This means that it is necessary to insert a break on the infeed to the discs. At a minimum this break must be a distance equal to the disc radius from the disc shaft. The chain length in a serpentine conveyor normally should not exceed 25 m (82 ft) between the drive stations.

Special Design Guidelines

Pasteurizers & Blanchers

These are heated conveyors that work in an environment with high temperatures, mainly with belts.

They include:
- Pasteurizers
- Blanchers
- Can heaters
- Cookers
- Shrink-wrapping machines
- Others

Very often this kind of conveyors is used for continuous food processing. They are usually long conveyors with high product loads.

Construction
Conveyor Frame
The frame of a conveyor is normally of stainless steel, often wearstrips are not used because of the poor cleanability in conveyors with unpacked products like blanchers and cookers. The frame also must allow for thermal expansion in the belt. Refer to the calculation section for details on calculating thermal expansion.

Dimensional precautions
Measures must be taken to allow for the thermal dimensional changes in the frame laterally and longitudinally. In the width the frame has to be fitted so that it allows for the thermal expansion plus a clearance of minimum 15 mm (0.59 in.) to allow for tolerances. Longitudinally the setup has to allow for the thermal elongation of the belt, this means that there has to be a certain take-up in the return.

Note: By adding steel reinforcement links the thermal length change decreases, and the take-up problems will be reduced.

For more calculations on tensile strengths, sprocket requirements and shaft requirements, refer to the belt calculations section (pages 65-70).

Vacuum Conveyors

The uni-chains product range offers various belts and chains with vacuum holes. Using vacuum ensures an equal pressure across the entire width of the belt. Some belts currently have vacuum holes pre-molded into the belt. Refer to the uni-chains belt catalog for the complete range of belts with molded vacuum holes. Other locations and sizes of holes can be manufactured upon request in any closed top uni-chains belt or Slat Top chains.

Vacuum conveyors are typically used for inclined conveying of empty containers such as cans. Other products and conveyor applications such as overhead conveying are also suitable for vacuum conveying.
Contact uni-chains engineering for vacuum percentage open area per your requirements.

Special Design Guidelines

Long Conveyors

The requirements for long conveyors have increased recently, especially within the automobile and tourist industries.

The great advantage of long conveyors is the reduced need for transfers between conveyors. Transfers often create problems involving increased costs. Another advantage is the reduced number of driving stations, reducing the construction costs of the conveyor.

When building long conveyors you should pay great attention to the increased risk of pulsation.

Another important aspect is the belt elongation which can be considerable.

Definition of a long Conveyor
Normally, a straight running conveyor is defined as being long if the total length exceeds 20 m (65 ft). For a sideflexing conveyor the length is 12 m (39 ft). If these lengths are exceeded, the risk of pulsation increases. For ways to reduce pulsation, refer to slip-stick/surging/pulsation on page 39.

Belt Elongation
There are several ways to absorb the belt elongation. Below the two most common methods will be described.

Method 1
The elongation is absorbed by a catenary sag on the return. The return belt must run on rollers with a given distance, the elongation will then be distributed between the rollers in the catenary sag. It is important, when applying this method, to ensure that the distance between the first and the second roller is the largest because the belt weight must be the largest at that spot. This ensures that the catenary sag will be located there to provide a good engagement between belt and driving sprockets.

Method 1 is relatively simple and economical but it has some disadvantages. One is that it requires a large construction height. Another is the risk that the belt between the rollers will start to oscillate and thus increase the pulsation (to address this the roller spacing should vary from one roller to the next). Furthermore noise may also be generated.

Method 2
In this method the elongation is absorbed by means of air cylinders mounted either on the side of the conveyor or between top and return.

Length of stroke of the cylinders must be minimum 0.5 x total belt elongation.

The advantages of this method are that it is possible to build a conveyor with a relatively low construction height. Furthermore the risk of pulsation caused by vibrations from the return is reduced because this is "tight" due to the cylinders.

Method 2 is considerably more costly than method 1, so it is recommended in each case to consider thoroughly what is necessary for the conveyor in question.

Contact uni-chains engineering for further information.

Special Design Guidelines

Carousel (endless) Conveyors

In an endless conveyor there is no return, thus half of the costs for chain/belt can be saved. Endless conveyors are possible only with sideflexing chains/belts.
See figure 3-39.

With Transfer Plates
A normal vertical drive with a combined sag/return transfer zone.

This type of conveyor is characterized by the driving sprocket being placed under a dead plate together with a sag or a tensioning device to absorb the belt elongation. See figure 3-40. If the minimum transfer length is required a nosebar can be used.

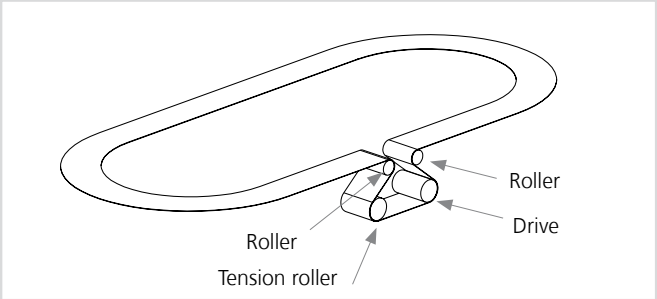

Figure 3-39

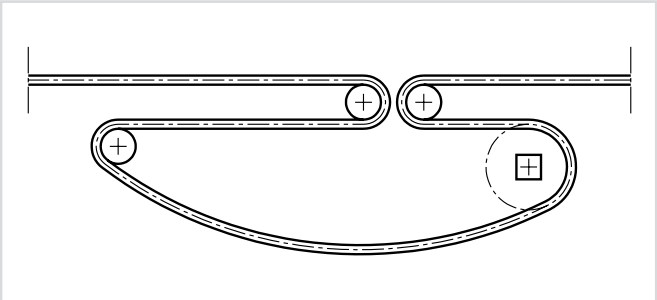

Figure 3-40

Thermal Expansion and Contraction

Any material will expand when heated. We know it from the liquid in a thermometer. You may also have heard about railway rails that expand during extreme summer temperatures, hampering the traffic. When constructing conveyors the designer and fabricator should also allow for thermal expansion and contraction. Plastic will expand at a much greater rate than steel and considerations must be made for this.

Temperature changes can be caused by:

1) Variations in the surrounding temperature (day/night or summer/winter)
2) Heating because of friction during operation (start/stop)
3) Cold or hot processes that the chain/belt encounters on the line
4) Heat radiation from surrounding processes

Plastic material is a poorer heat conductor than steel. It takes longer to heat and cool plastic materials than e.g. steel. This should be taken into account at very short heat/cold influences. Refer to the calculation section for calgulation of the amount of thermal expansion or contraction.

Wearstrips, Wearparts and extruded Profiles
The thermal expansion of wearstrips, straight parts and extruded profiles can be accommodated by dividing the total length into smaller sections. The thermal expansion of a given section can be calculated and enough space must be left for the surrounding sections.

It is important that the wearstrip is fastened only at the end closest to the idler end of the conveyor. Thus the expansion will take place in the travel direction of the chain/belt. In the joints between the plastic wearstrips it is necessary that the chain/belt is supported. One way to do this is to cut the joints at a 45° angle to provide some overlapping of the gap between the strips. Another is to use a "tongue and groove" arrangement as shown in figure 3-41.

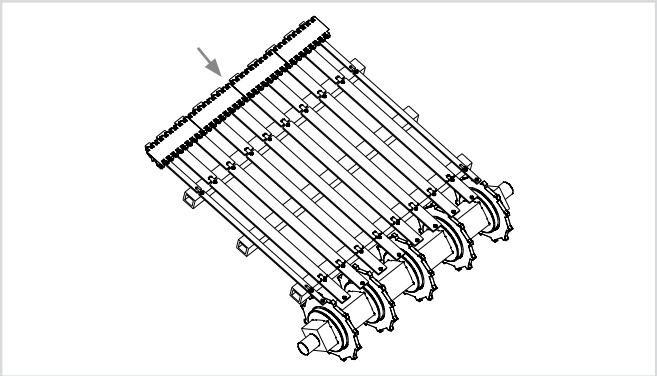

Figure 3-41

Note: To calculate the expansion in the width of a belt, the same formula can be used, but with the width instead of the length.

Special Design Guidelines

Expansion due to Water Absorption

All plastic materials absorb water from the surroundings, but very often it is not a major factor – except when dealing with Nylon (PA) material. With Nylon there can be a considerable change in dimension depending on the environment where the part is placed. The absorption of water causes the plastic part to swell and thus leads to a volume increase. The chart below shows the dimensional expansion of different materials due to moisture absorption. Please note that the expansion shown here does not necessarily translate into belt/chain dimensions as there are many other factors involved.

Material	Water Absorption ISO 62 / ASTM D570		Linear Dimensional Expansion Water Absorption	
	Equilibrium 23°C / 50% RH (%)	Saturation 23°C (%)	Equilibrium 23°C / 50% RH (%)	Saturation 23°C (%)
PP	0.02%	0.03%	0.01%	0.01%
PE	0.02%	0.03%	0.01%	0.01%
POM	0.22%	0.80%	0.10%	0.37%
PA6	2.80%	8%-10%	1.05%	3%-3.38
PA66	2.50%	7%-8.5%	0.95%	2.7%-3.2%
PA6.6-GFH	2.00%	6.00%	0.80%	2.36%
PBT	0.20%	0.50%	0.09%	0.22%
PBT-GR	0.15%	0.40%	0.07%	0.19%
NBWR	0.20%	0.60%	0.08%	0.24%

Slip Stick/Surging/Pulsation

A modular belt can be perceived as a spring, i.e. the belt can stretch a little in each pitch. In long belts this elongation is of great importance and must be taken into account. Imagine that you pull a floating belt. Theoretically the belt will begin to move at both ends at the same time.
However if the belt slides on a support, the belt in the idler end will not begin to move immediately when the belt is driven. The static friction between the belt and the support will retain the belt for an instant and will not move until the tension is high enough to overcome this static friction.
When the motor starts the belt at the drive end will move immediately, but the belt toward the idler end will be held back until the pull has overcome the static friction. When the belt begins to move, it will not be a smooth start because of the spring effect in the belt and because dynamic friction is lower than the static friction. These built up forces at each pin are released once this force of friction is overcome and causes pulsation.

Ways to Overcome Pulsation
As described above the friction is one of the reasons for the pulsation. So it is very important for the friction to be as low as possible between the belt and the support. To reduce friction uni-chains recommends the use of wearstrips in a high density material (PEHD/UHMWPE). This material has a lower friction than stainless steel that is often used in conveyors. It should also be noted that surging is more prevalent at slower speeds, so increasing speed is another way to reduce surging.
There are two options: To run the belt on a whole PEHD/UHMWPE plate to support the entire belt or to run it on wearstrips. Regardless of the method it is important to mount the support properly (see wearstrip support page). There should be no sharp edges in the joining points of the profiles where there is a risk of increased friction that will cause an uneven pull in the belt. It is recommended to chamfer the edges of the profiles.
It is also important to address the return of the belt when looking at ways to reduce pulsation. Often rollers are used to support the belt on the return, causing very little increase in friction. However, under certain conditions of speed and tension, these catenaries can reach their natural frequency and cause a vibration that can be carried up to the carryway. One way to address this harmonic vibration is to vary the spans of the catenaries on the return. The best practice is to add a partial slider return along with the rollers of at least 2/3 the length of the conveyor. This added resistance of the slider will help to hold back surging and dampen the vibrations of the catenaries.

Special Design Guidelines

Slip Stick/Surging/Pulsation

If a conveyor is required to be totally free of pulsation, it is often necessary to furnish the idler end with an adjustable tensioning system. This retention must be large enough to remove the elasticity of the belt totally. The pulsation of the belt will be non-existent because the belt is no longer elastic but rather a rigid item. The size of the retention force varies with the length of the conveyor. Normally the retention power is set to 75% of the power required to pull the unloaded belt.

Chordal Action

Chordal action is a type of pulsation in the belt or chain's linear velocity that results from the sprocket rotating at a constant speed while the belt hinge follows the chords. Figure 3-44 shows the movement of the belt along the sprocket. In applications where product tippage and/or slippage can be an issue or where constant speed is critical the chordal action should be taken into account when selecting a chain/belt and sprocket combination.

The greatest amount of chordal action occurs with a chain that has a large pitch and a small diameter sprocket. A large sprocket diameter and a small chain pitch will result in a small chordal action. There are reasons, however, that a large sprocket and small chain pitch are not used. If there is a transfer, a nosebar or a small sprocket/roller are preferable to create a small gap between the transfer. Or more simply a lack of space could limit the use of a large sprocket. Figure 3-42 and figure 3-43 are graphs explaining the relationship between number of teeth and chordal action.

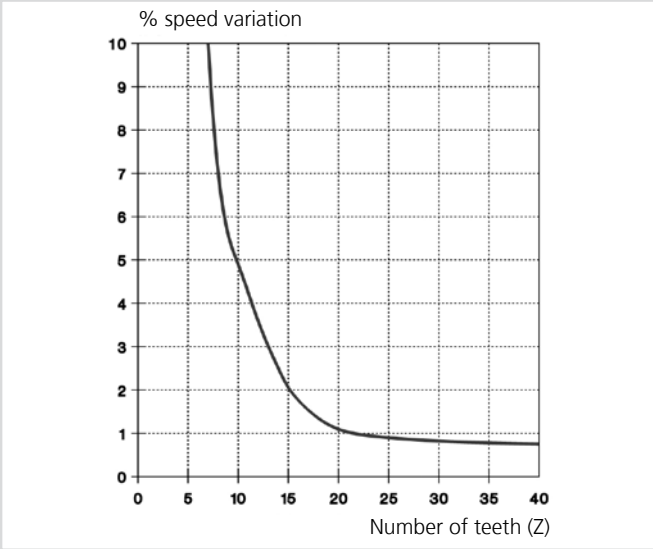

Figure 3-42

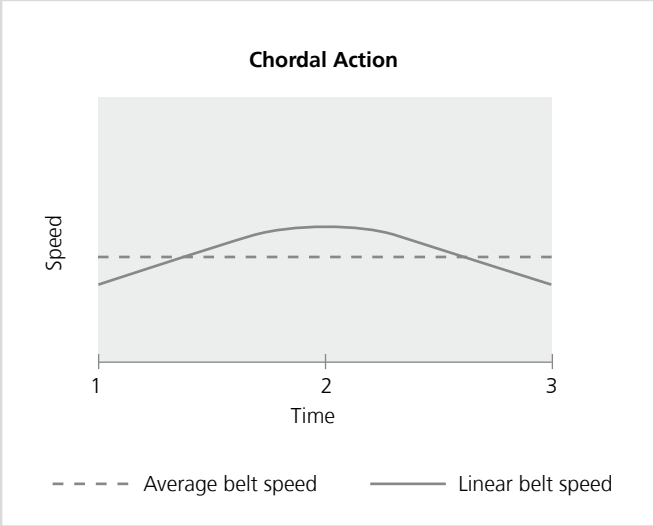

Figure 3-43

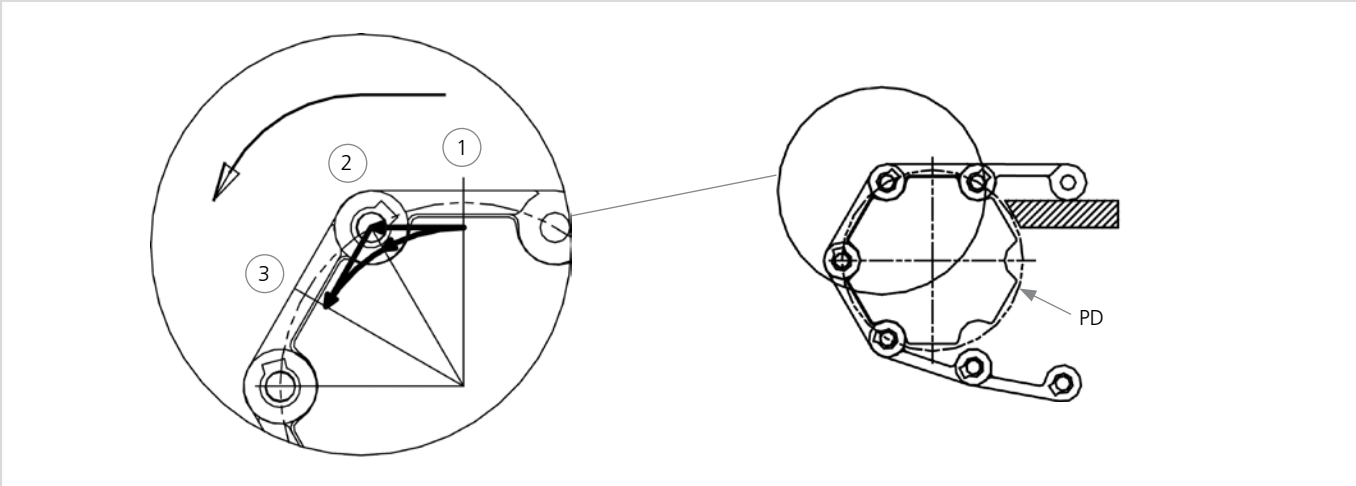

Figure 3-44

Wearstrip and Support

Straight running Chains, single Tracks

Some details for the wearstrips and supports

- Straight profiles can consist of one or several blocks with machined tracks. See figure 3-45, figure 3-47 and figure 3-48.
- The profiles must be fixed to the conveyer frame.
- The typical length of a straight profile is 3 m (10 ft).
- The shape of the track depends on both the type of chain and the application it is designed for.
- Straight running chains can be supported with roolers on the return section. Figure 3-46.
  The distance between the rollers has to vary if there is more than one roller on the return section.

Below are some cross-sections of profiles for listed straight running chains.

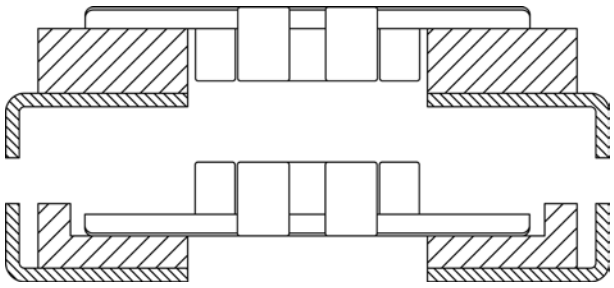

Series uni 800/802/805, uni 810/812/815,
uni Magnet type, uni 820/831 and uni 821, open type

Figure 3-45

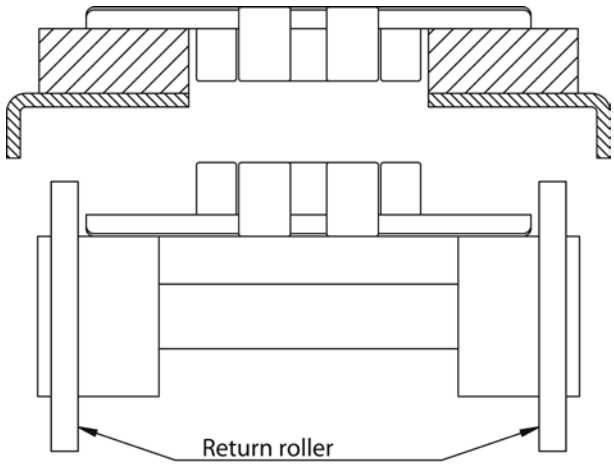

Series uni 800/802/805, uni 810/812/815,
uni Magnet type, uni 820/831 and uni 821, open type

Figure 3-46

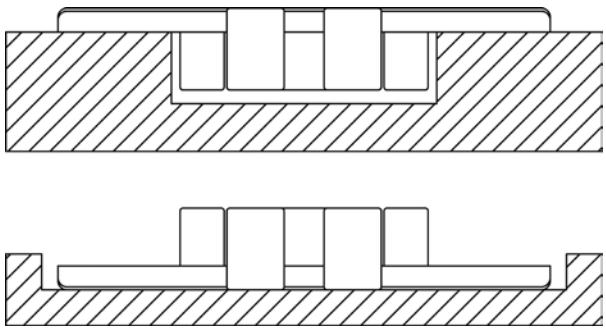

Series uni 800/802/805, uni 810/812/815,
uni Magnet type, uni 820/831 and uni 821, closed type

Figure 3-47

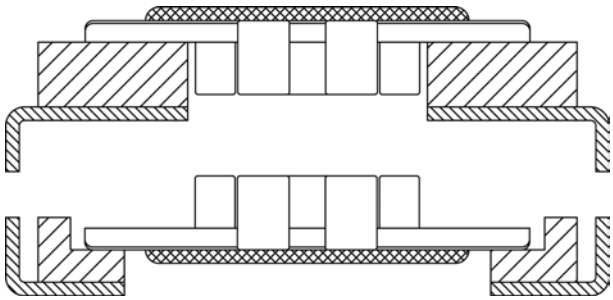

Chain with rubber inserts.
Series uni 800/802/805, uni 810/812/815,
uni Magnet type, uni 820/831 and uni 821, open type

Figure 3-48

Wearstrip and Support

Straight running Chains, multiple Tracks

Some details for the wearstrips and supports

- See straight running chains, single tracks on page 40.
- Recommended distance between chains on carry and return min. 2 mm (0.08 in.). Figure 3-49, figure 3-50 and figure 3-51.

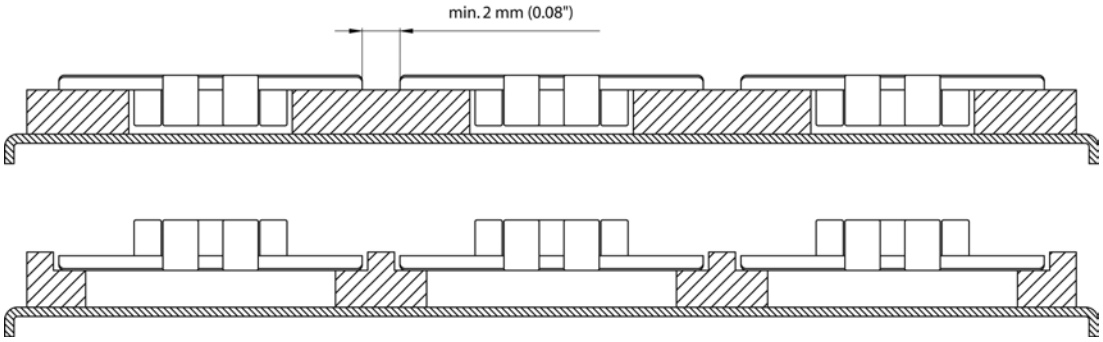

Series uni 880/802/805, uni 810/812/815, uni Magnet type, uni 820/831 and uni 821, open type

Figure 3-49

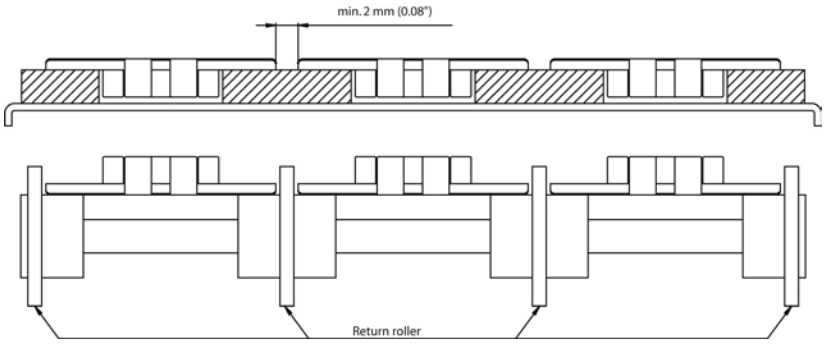

Series uni 880/802/805, uni 810/812/815, uni Magnet type, uni 820/831 and uni 821, open type

Figure 3-50

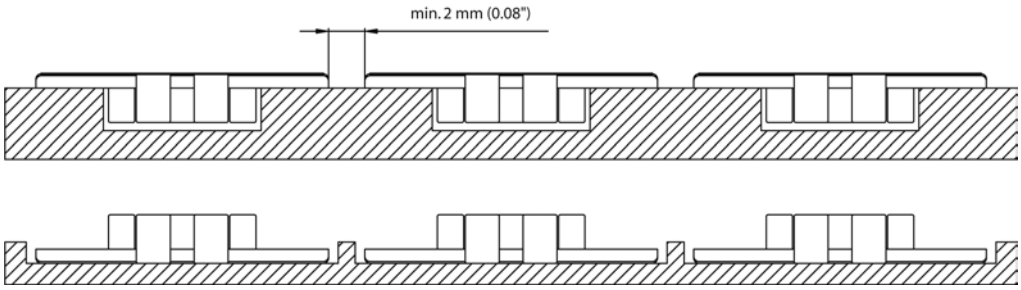

Series uni 880/802/805, uni 810/812/815, uni Magnet type, uni 820/831 and uni 821, closed type

Figure 3-51

Wearstrip and Support

Sideflexing Chains, single Tracks

Some details for the wearstrips and supports

- The profiles must be fixed to the conveyor frame.
- The shape of the track depends on both the type of chain and the application it is designed for.
- The carry and return profiles for Tab-chains have similar shaped tracks. Figure 3-52 and figure 3-53.
- For certain bevel type chains it is necessary to support the chain on the return, with a return plate under the chain. Figure 3-54 and figure 3-55.
- Often there are no returnways. Instead the chain runs freely or is supported by rolls or planes. Figure 3-46.

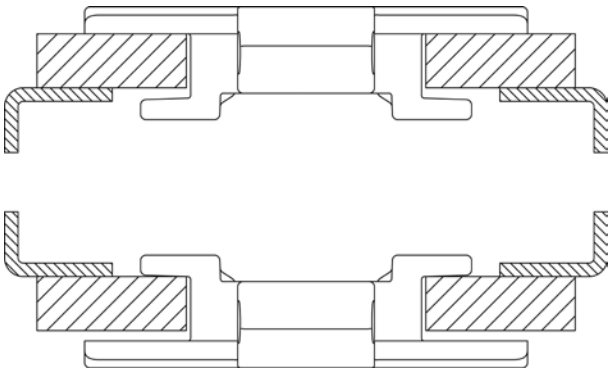

Series uni 440 TAB, uni 879 TAB, uni 880 TAB, uni 881 TAB and uni 882 TAB, open type

Figure 3-52

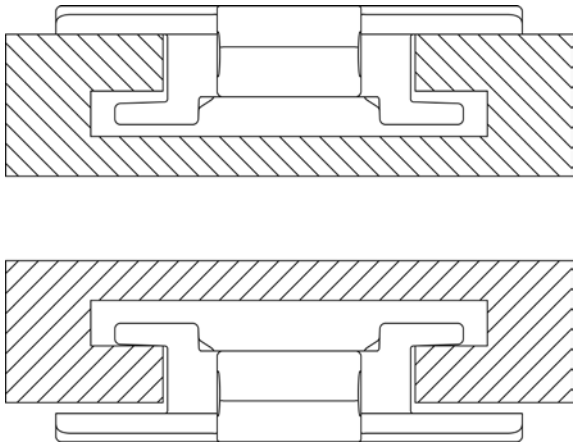

Series uni 440 TAB, uni 879 TAB, uni 880 TAB, uni 881 TAB and uni 882 TAB, closed type

Figure 3-53

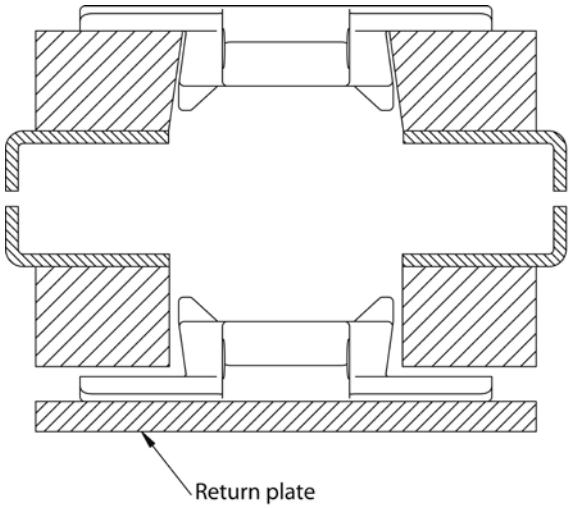

Series uni 879, uni 880 and uni 881, open type

Figure 3-54

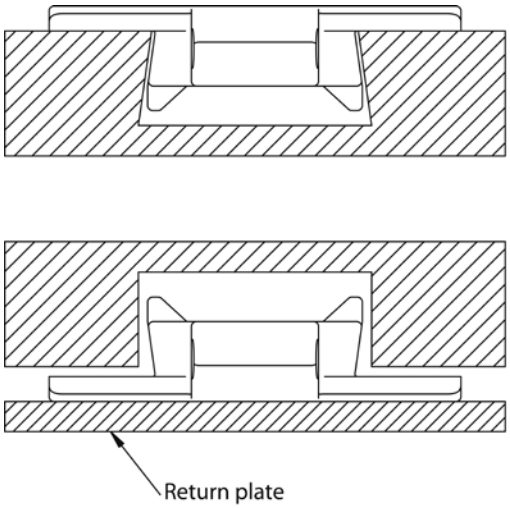

Series uni 879, uni 880 and uni 881, closed type

Figure 3-55

Wearstrip and Support

Sideflexing Chains, multiple Tracks

Some details for the wearstrips and supports

- See sideflexing chains, single tracks on page 42.
- Minimum distance between chains on carry and return is min. 2 mm (0.08 in.). Figure 3-56, figure 3-57 and figure 3-58.

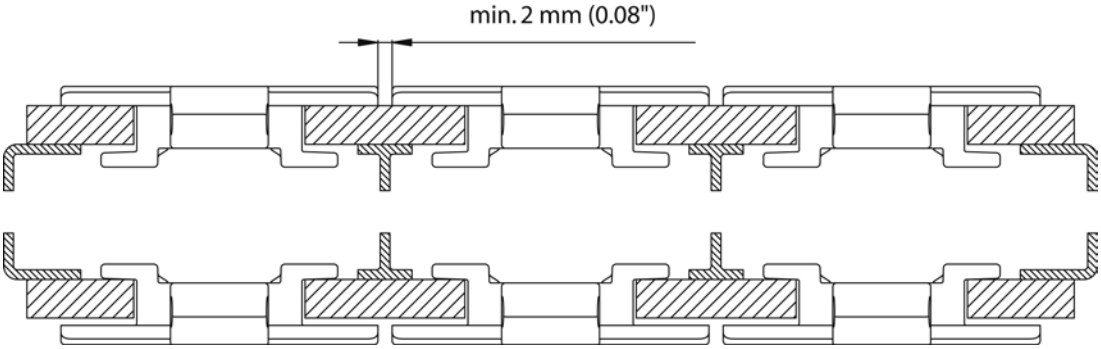

Series uni 440 TAB, uni 879 TAB, uni 880 TAB, uni 881 TAB and uni 882 TAB, open type

Figure 3-56

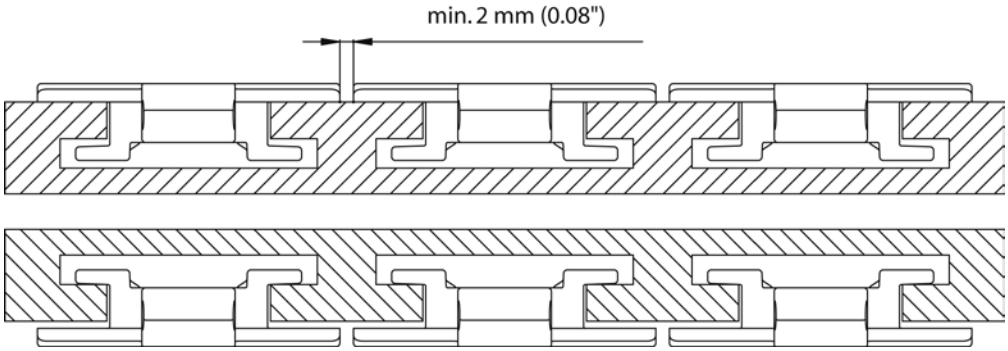

Series uni 440 TAB, uni 879 TAB, uni 880 TAB, uni 881 TAB and uni 882 TAB, closed type

Figure 3-57

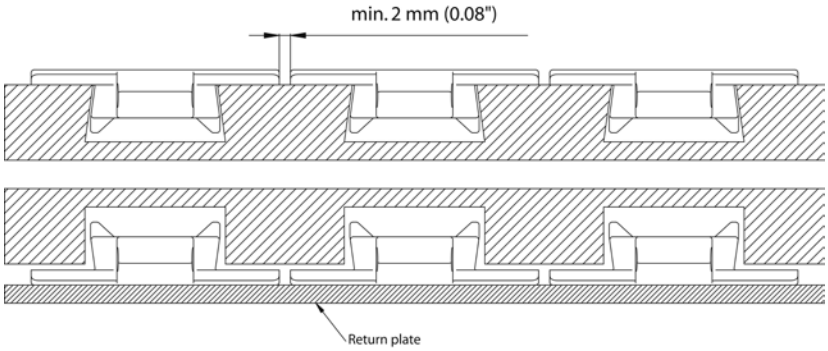

Series uni 879, uni 880, uni 881, closed type

Figure 3-58

Wearstrip and Support

Sideflexing Super Flex Chains, Open version

Some details for the wearstrips and supports

- Super flex chains can be lifted out of the carry wearstrips without the use of any tools.
- The super flex shoe ensures that the chain is always held totally flat against the wearstrips in the curve.
- The design reduces vibrations.

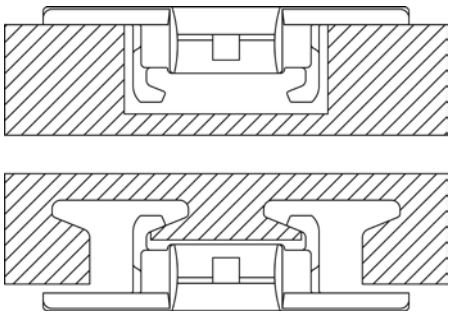

Series uni 879 SFL, uni 880 SLF and uni 881 SFL, Single Tracks Straight section, open type

Figure 3-59

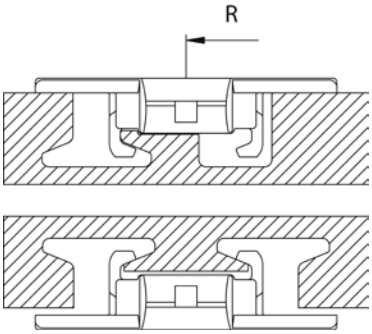

Series uni 879 SFL, uni 880 SLF and uni 881 SFL, Single Tracks Curve section, open type

Figure 3-60

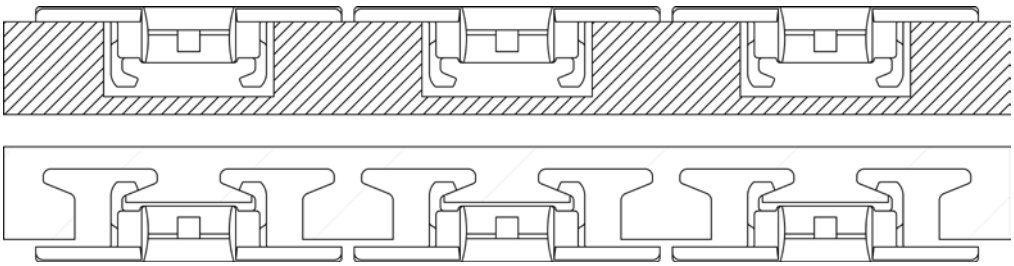

Series uni 879 SFL, uni 880 SLF and uni 881 SFL, Multi Tracks Straight section, open type

Figure 3-61

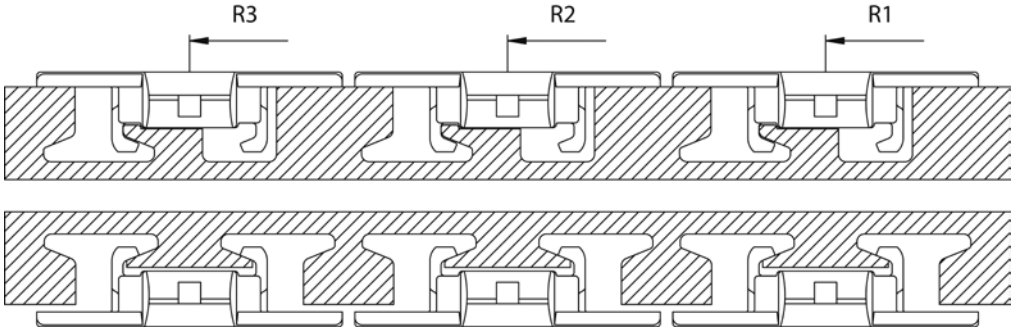

Series uni 879 SFL, uni 880 SLF and uni 881 SFL, Multi Tracks Curve section, open type

Figure 3-62

Wearstrip and Support

Sideflexing Super Flex Chains, Closed version

Some details for the wearstrips and supports

- Super flex chains can be lifted out of the carry wearstrips without the use of any tools.
- The super flex shoe ensures that the chain is always held totally flat against the wearstrips in the curve.
- The design reduces vibrations.

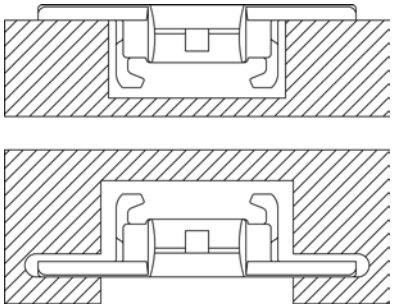

Series uni 879 SFL, uni 880 SLF and uni 881 SFL, Single Tracks Straight section, closed type

Figure 3-63

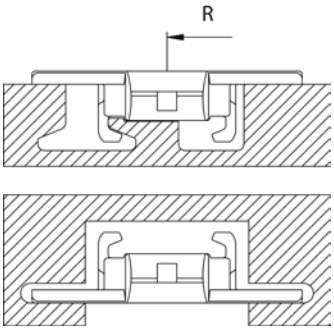

Series uni 879 SFL, uni 880 SLF and uni 881 SFL, Single Tracks Curve section, closed type

Figure 3-64

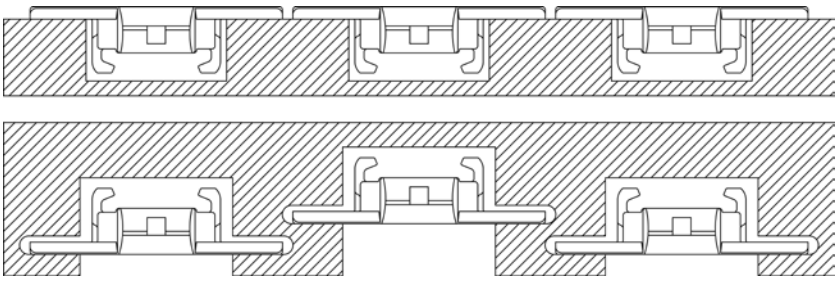

Series uni 879 SFL, uni 880 SLF and uni 881 SFL, Multi Tracks Straight section, closed type

Figure 3-65

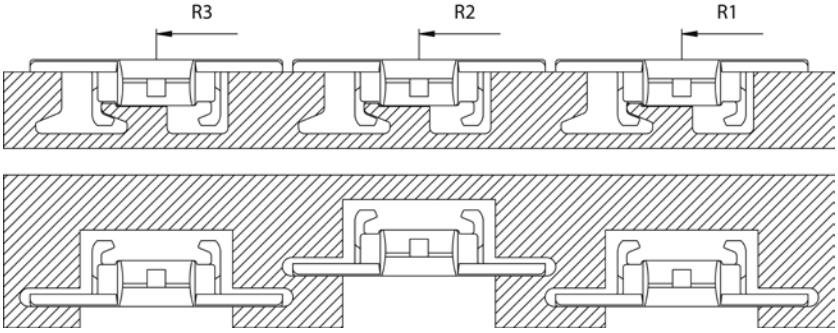

Series uni 879 SFL, uni 880 SLF and uni 881 SFL, Multi Tracks Curve section, closed type

Figure 3-66

Wearstrip and Support

uni Flex Chains

The construction of a carryway for uni Flex chains varies, depending on the chain type and application. Figure 3-67 shows two different types of supports for uni Flex Chains, fishbone/chevrom pattern and serpentine configuration. The wearstrips and in a fishbone or serpentine fashcon so that wear is placed evenly over the chain. See figure 3-67.

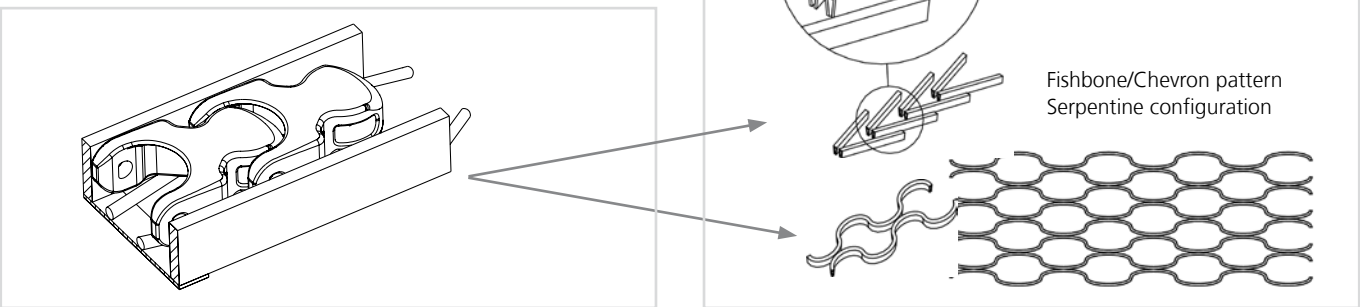

Figure 3-67

Note: The drawing only suggests a placing of wearstrips which can ensure an even wear on the chain.

Wearstrip and Support

Belt Carryways and Returnways

Belt Carryways
The design of the carryway must be made taking the following factors into account:

- Horizontal or incline conveyors
- Belt type
- Load
- Temperature conditions
- Abrasive environment

Carryways for belts can be made in many ways. Below are different examples of how carryways can be built based on design requirements. In all cases, due to the possible expansion of the wearstrip materials, care must be taken, when mounting carryways that the materials are free to expand and contract without interfering with conveyor operation.

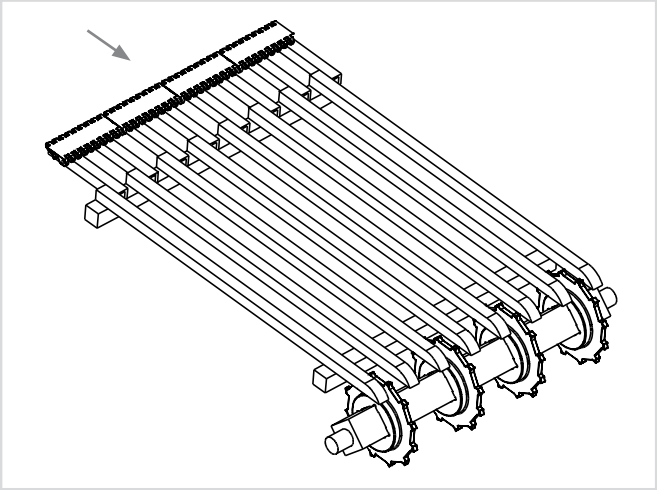

Figure 3-68

Parallel Wearstrips
For belt systems with light loads and low wear the carryway can be constructed see figure 3-68.

"Fishbone" or "Chevron" Pattern
For belt systems with rather heavy load or positioned in high wear applications the carryway can be constructed with flat strips in a V-position as seen in figure 3-69 to distri-bute the wear evenly on the entire belt. This is sometimes referred to as a "fishbone" or "chevron" pattern. A gap of 10.2 mm (0.4 in.) or greater is recom-mended at the points and the angle between the points should be between 20° and 60°. A typical distance measured between two parallel strips is 51 mm (2 in.) and should not exceed 127 mm (5 in.). Other methods for distributing wear on the bottom of the belt are shown in figure 3-70.

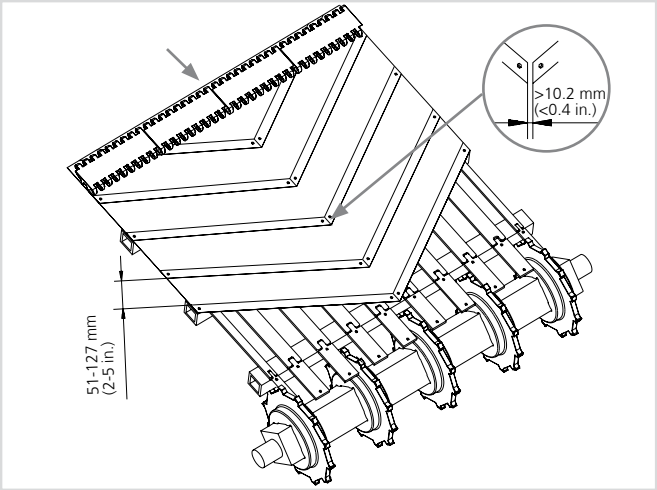

Figure 3-69

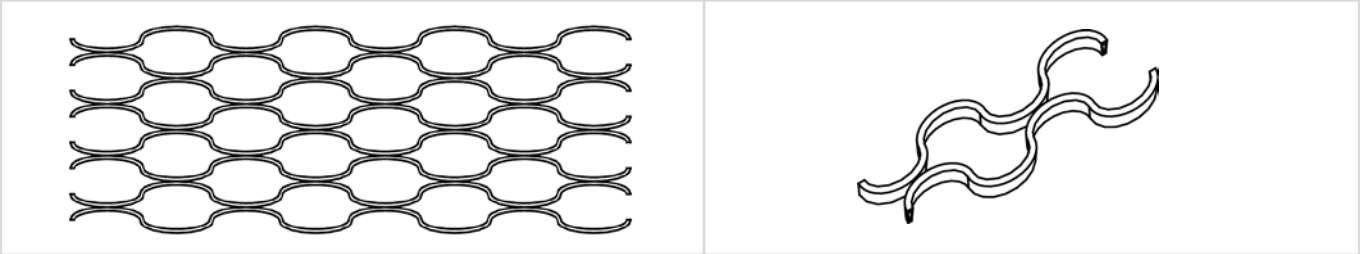

Figure 3-70

Wearstrip and Support

Tracking & Control Systems for Sideflexing Belts

The three basic Methods
There are three basic ways that a sideflexing belt can be guided around the curves and in the straight sections.
- Held down on the top surface with wearstrips
- Guided using edge tabs
- Guided using bottom tabs

All of these methods have advantages and disadvantages as noted below. Each uni-chains belt type has its own wearstrip guidelines and dimensions. Consult the individual uni-chains belt catalog pages for specific details.

Top Surface Hold-Down Method
This is the easiest method and it is the most forgiving with regard to fabrication tolerances of the conveyor. This method simply relies on a wearstrip on top of the belt to prevent it from pulling up and out of the curve. In this case the guide clearance only needs to be small enough to ensure that the belt edge is captured. So a larger amount of the belt edge being held down allows for a more generous guide clearance. This method also gives a large bearing surface contact area on the inside edge which is preferred for high speed and high wear applications. The disadvantage to this method is that the usable belt surface area is reduced because of the hold-down wearstrips on top. Figure 3-71 is an example of a uni Flex SNB belt using this tracking system.

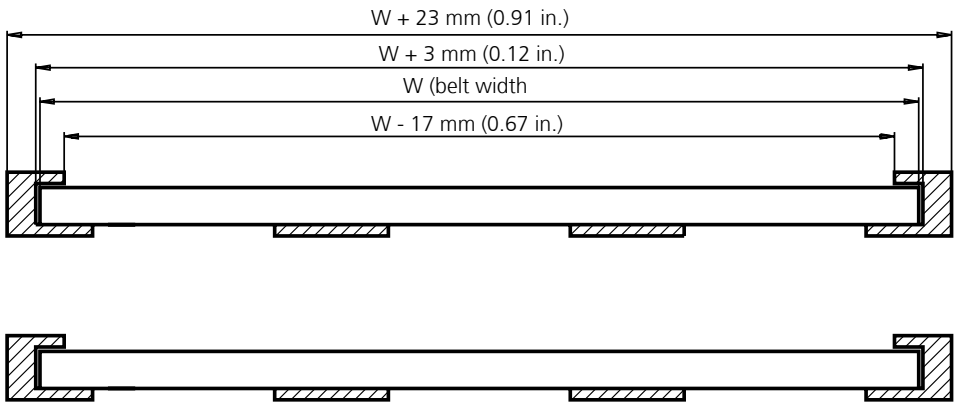

Wearstrips for uni Flex SNB-L with wearpart, uni Flex SNB-W and uni Flex SNB CR

Figure 3-71

Wearstrip and Support

Tracking & Control Systems for Sideflexing Belts

Edge Tab (O-TAB) Hold-Down Method

This method uses edge tabs (called O-tabs) to guide the belt. In this case the wearstrip is holding down the edge tab, not the top surface of the belt. So the advantage of this method is that the wearstrips can be below the surface of the belt which allows the use of the entire belt width or even allows products to overhang the belt edges. The disadvantage of this method is that the guide clearance is very critical because the wearstrip must properly engage the extended portion of the tab. It must be small enough to engage the tab but not so small that it compresses the belt. Also, because of the tab feature the bearing surface on the inside edge is reduced which decreases wear resistance. Figure 3-72 is an example of a uni Flex SNB WO with an integrated outer O-Tab.

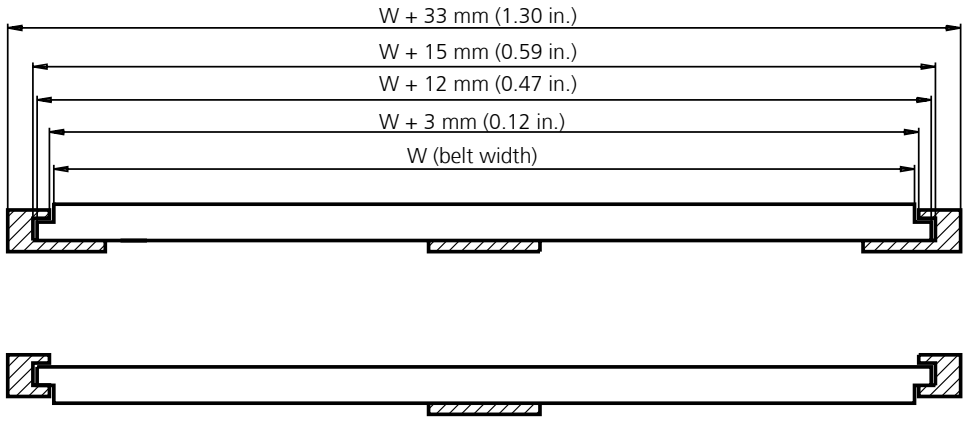

Wearstrips for uni Flex SNB-L with O-Tab, uni Flex SNB-WO and uni Flex SNB CR

Figure 3-72

Note: The belt and/or the conveyor frame will expand when the temperature rises. Precautions should be taken to ensure correct tracking and belt control.

Bottom Tab Hold-Down Method

This method uses hold-down tabs on the bottom of the belt to prevent it from pulling up and out of the curves. An advantage of this method is that the tabs are larger than edge tabs and allow for more tolerance on the guide clearance. Also, this method does not require wearstrips on the edge leaving it open for side transfers or parallel lanes. The disadvantage is that the tabs can easily catch on any susceptible areas on the conveyor and, because of their size, have a tendency to break if exposed to catch points. uni-chains does not recommend bearing the radial load on these tabs in the curve. They should only be used to resist the upward force in the curve. It is recommended to use inside edge wearstrips in the curve to bear the inward radial load. Below is an example of Flex SNB with bottom tabs. This can be done with tabs on one or both sides. The example shows a tab on one side.

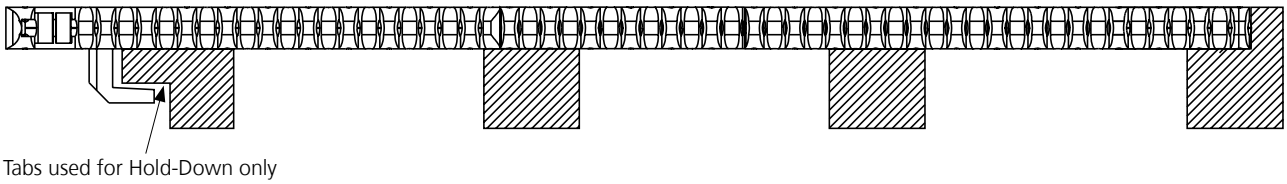

Wearstrips for uni Flex SNB WT-L-L

Figure 3-73

Note: The belt and/or the conveyor frame will expand when the temperature rises. Precautions should be taken to ensure correct tracking and belt control.

Wearstrip and Support

Returning Belt with Product Supports

Special considerations must be made when returning a belt with product supports. See figure 3-74. Because the product supports extend above the surface of the belt, when it is running upside down it cannot roll over rollers or slide on wearstrip like a flat top belt can. The most common return method is to indent the product supports on the edges so the belt can be supported on the edges on the return. So on the return the belt is supported by a roller, wearstrip, or shoe on the edge and the product support is left to hang freely in the center. If the belt is very wide it may be necessary to include a notch or notches across the width of the product support so more return supports can be used at those points. The need for center support notches is dependant on the belt rigidity which is a function of its construction as well as the belt and pin materials.
Another method of returning belts with product supports is the use of bottom tabs. With tabs the belt is returned in the same way as a Slat Top chain with tabs. In this case the product support is able to extend the full width of the belt because the edges are not needed for support. Only certain belts types are available with bottom tabs. Please consult the uni-chains belt catalog for more information.

Figure 3-74

Anti-sag Carryway Wearstrip Configuration

Certain applications can result in allowing the belt to buckle ahead of the sprocket due to low tension in the belt. This can cause several concerns with the belt jamming in the conveyor or small conveyed products tipping. See figure 3-75.

Buckling can be overcome by extending the wearstrips between the sprockets see figure 3-76.

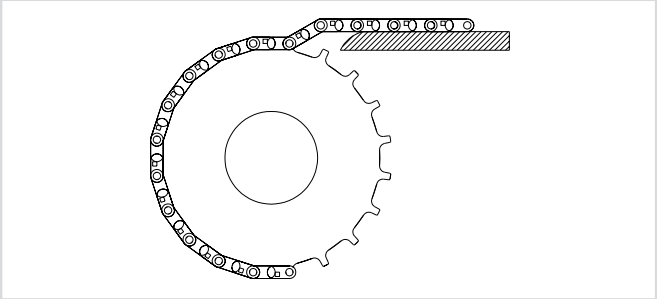

Figure 3-75

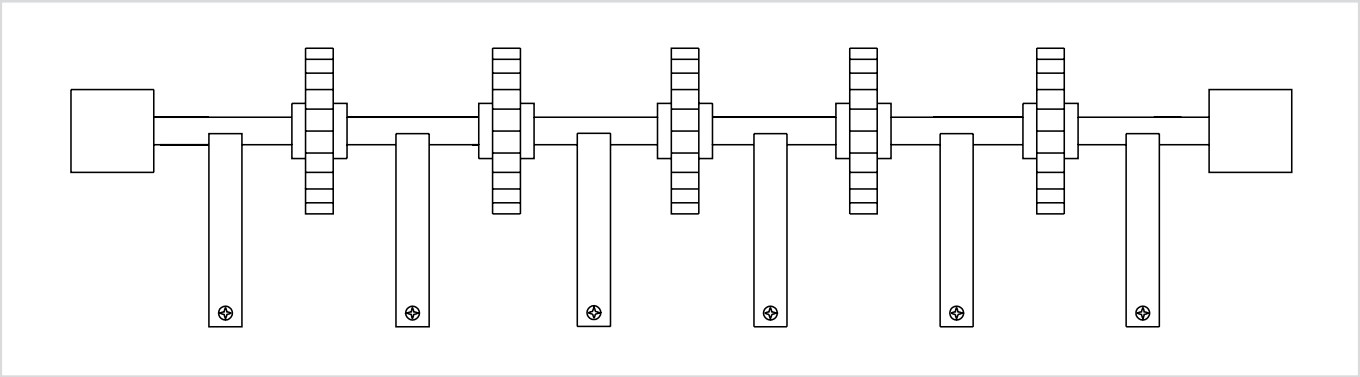

Figure 3-76

Take-up Methods

Control of Belt Length

Belt or Chain Running in One Direction
As temperature, load and friction vary, the belt expands or contracts, increasing or decreasing belt length respectively. To counteract this effect a catenary sag is used after the drive sprocket in the returnway. A catenary sag is a section of free hanging belt that absorbs excess belt in expansion or gives excess belt to the conveyor in the event of contraction. The catenary sag also serves as a weight on the return-way of the belt. This weight of the belt in the catenary sag is enough to ensure sprocket engagement by creating tension after the drive sprocket and before the idler sprocket.

When designing the conveyor frame, the designer must keep in mind the dimensions of the catenary sag and make sure that there are no obstructions hindering or supporting the catenary sag. If the sag rests on the conveyor frame, the effect of the sag to serve as a weight is reduced greatly. If the belt becomes too long, links from the belt should be removed so the catenary sag is returned to its intended dimensions. Below are different setups for a conveyor with a catenary sag.

Keep in mind that for all return arrangements the backflex radius of the particular belt/chain must not be reduced. The backflex (or backbend) radius is the minimum negative bend (opposite of the belt bending over the sprocket) the belt can safely undergo. This value is different for each belt type and can also change for each belt/chain when certain accessories like sideguards are used. Backflex radius can be found for each belt in the uni-chains belt catalog on the product main page next to this icon:

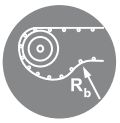

Take-up Methods

Control of Belt Length

The following are standard return ways and a description of how they can control belt length depending on the situation of the conveyor. See figure 3-77, figure 3-78 and figure 3-79.

For standard applications a catenary sag is placed next to the drive sprockets as shown in the drawing. For applications at higher temperatures, the expansion in the chain/belt should be calculated first to determine if sufficient space is available.

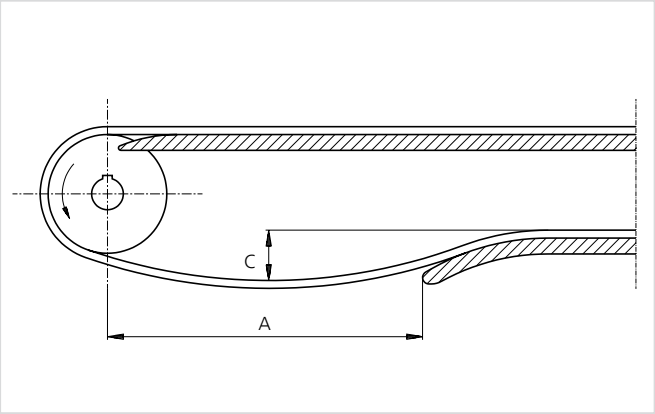

Figure 3-77

	mm	in.
A	500-2000	20-79
C	25-200	1-8

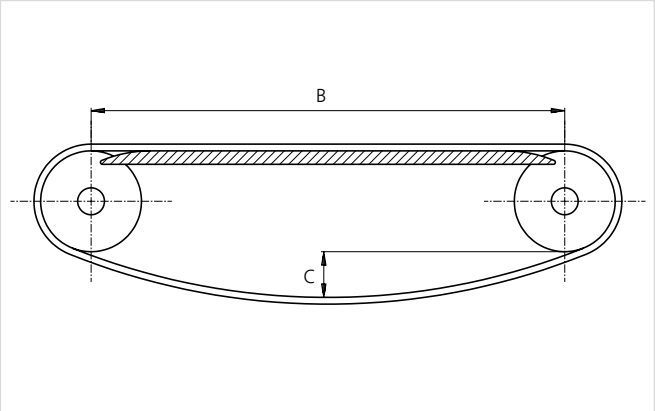

Figure 3-78

	mm	in.
B	max. 2000	max. 79
C	25-200	1-8

Support on the return side can be omitted on short conveyors under two m (6.6 ft) so the belt hangs freely between the idler and drive sprocket.

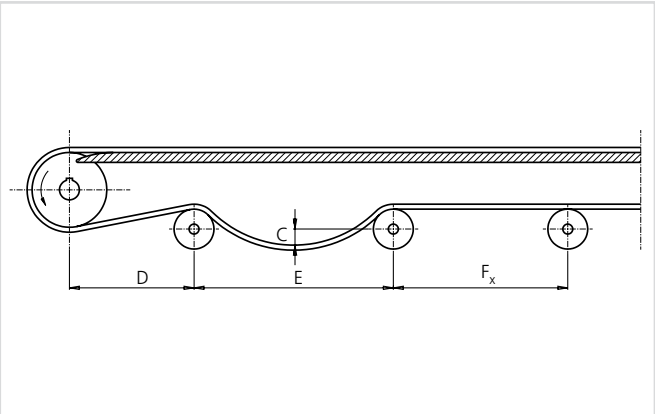

Figure 3-79

	mm	in.
C	25-100	1-8
D	0-2000	0-79
E*	500-2000	20-79
F_x*	≠ E	≠ E

*If F_x < E catenary sag in section E
If F_x > E catenary section F_x
Max. length of catenary sag is 2000 mm (79 in.)

For long conveyors a catenary sag will be placed where the biggest distance between two return rollers is to be found.
Never make the same distance between return rollers.

Take-up Methods

Control of Belt Length

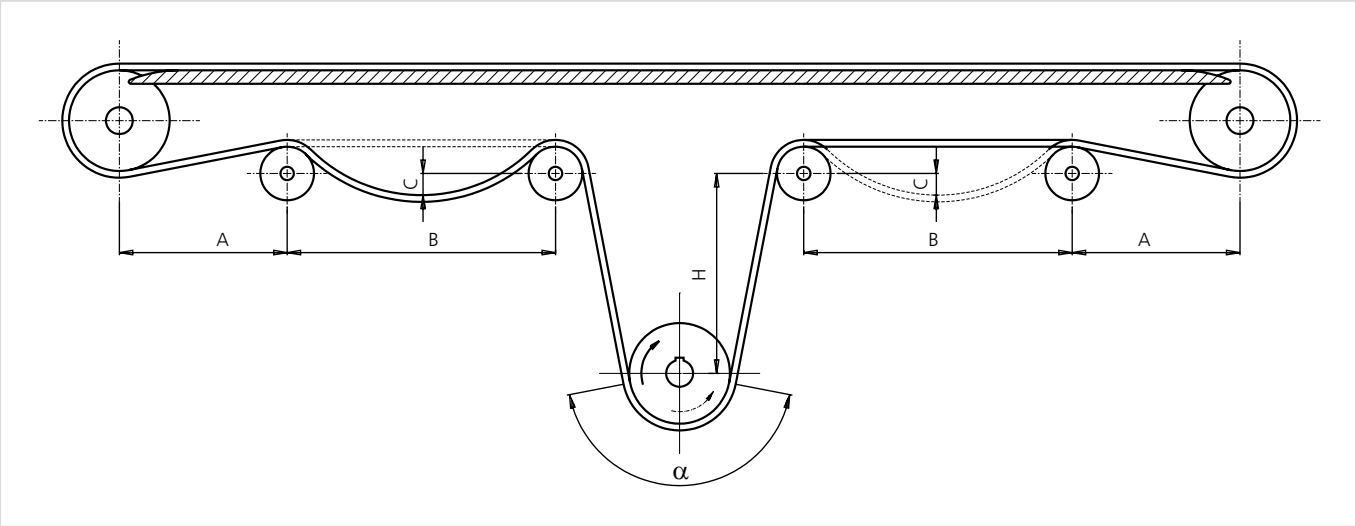

Figure 3-80

	mm	in.
A	0-2000	0-79
B	500-2000	20-79
C	25-200	1-8
H	min. 3 x P	min. 3 x P
α	120°- 175°	120°- 175°

P = belt pitch

Belt or chain running in both directions
This pull/pull system requires only one gear/motor.
See figure 3-80.

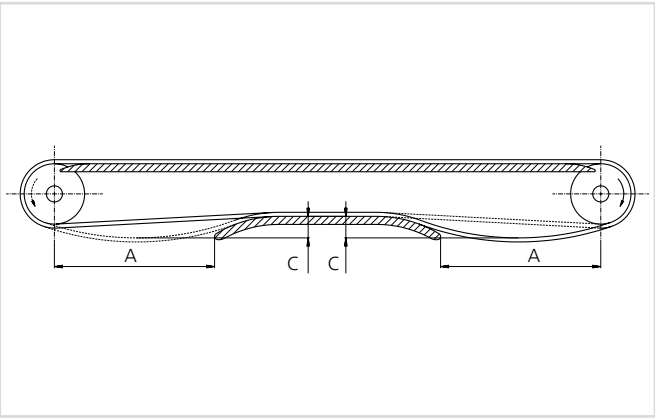

Figure 3-81

	mm	in.
A	0-2000	0-79
C	25-200	1-8

This conveyor requires two motors (one at each end).
This construction requires the possibility of disconnecting the motors. See figure 3-81.

Take-up Methods

Back Tension

It was presented in the previous section that a catenary sag also serves as a weight to create tension. This tension is called back tension. It is best to place the catenary sag directly after the drive sprocket, or if needed a "snub" roller may be placed after the drive sprocket and then the catenary sag thereafter. A "snub" roller should be placed at a height in relation to the drive shaft so that 180-210 degrees of wrap is created around the drive sprocket.

Back tension is easily adjustable by the size of the catenary sag. As the catenary sag dimensions increase, back tension increases. As the catenary sag dimensions decrease, back tension decreases. When increasing the catenary sag dimensions, always keep in mind the surroundings, such as the conveyor frame or drive components.

Special Take-up Arrangements

In cases where a catenary sag cannot provide adequate tension to ensure sprocket engagement, such as a very long and/or fast conveyor, alternate take-up methods must be implemented.

Gravity Style Take-ups
A gravity style take-up is a special type of take-up. It consists of a weighted roller or tensioning device that adds tension in the belt on the return side. It takes the place of a catenary sag and falls between the drive shaft and a supporting roller. See figure 3-82. Examples where a gravity style take up may be suitable include:

Conveyors:
- over 23 m (75 ft) long
- over 15 m long (50 ft long with belt speeds over 20 m/min.) (150 ft/min.)
- exposed to large temperature ranges
- operating at speeds over 15 m/min. (50 ft/min.), and with frequent starts under loads of over 120 kg/m^2 25 lb/ft^2

As a rule of thumb the following guidelines for weighted rollers can be used: 1 in. pitch belts and below, use a minimum 100 mm (4 in.) diameter roller with a weight of 15 kg/m (10 lbs/ft).

For 2 in. pitch belts and above, use minimum 150 mm (6 in.) diameter roller with a weight of 30 kg/m (20 lbs/ft). Keep in mind that this type of take-up increases wear between the pins and holes as tension is increased.

	mm	in.
A	100-500	4-20
E	500-1500	20-59

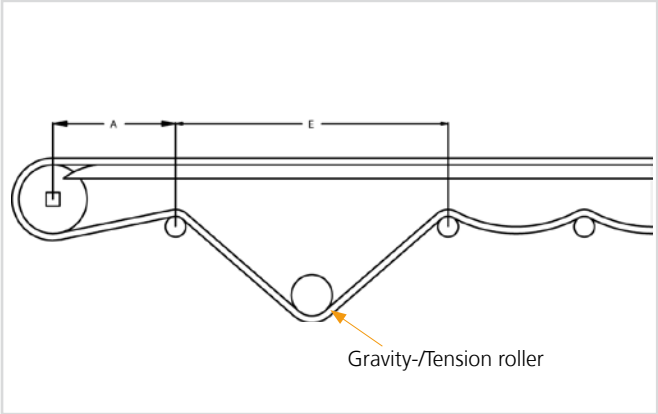

Figure 3-82

Screw, Spring or Cylinder Style Take-ups
To adjust the catenary sag back to its intended dimensions, a take-up can be installed on the idler shaft. The bearings for the idler shaft rest in horizontal slots so that the shaft can move as the screw, spring, or cylinder is adjusted. Potential issues with this system include:

- shafts can be misaligned
- belt can be over tightened causing greater wear and greater shaft deflection
- can increase total conveyor length

Take-up Methods

Special Take-up Arrangements

With these disadvantages, this kind of take-up should be a last option. Instead the belt should be worn in and modules should be removed by row(s) until the belt is back to its proper length. Figure 3-83 is a cross section of a typical screw style take-up.

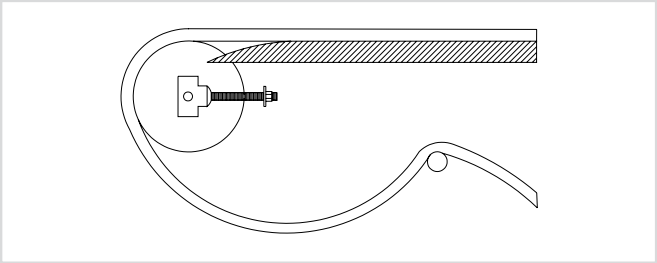

Figure 3-83

Screw, Spring or Cylinder Style take-ups
As a new belt is used, its pins settle into their links. This "breaks in" the belt and lengthens it This extra length is then absorbed by the catenary sag and therefore increasing the dimensions of the catenary sag.

Compressed Belt Take-up

As an alternative to the classic catenary sag belt length take-up system, it is possible to compress certain belts in the longitudinal direction to absorb the belt stretch that way. This can only be done with sideflexing belts or other belts that have the ability to compress in the longitudinal direction.

Driving Terminals
The uni-chains product range includes the development of the driving terminals as one way to utilize a compressed belt take-up. This consists of a pair of side plates mounted at the conveyor drive end to ensure correct belt/sprocket engagement.
A driving terminal system consists of side plates mounted at the driving and/or idle ends to ensure good engagement between belt and sprockets. These side plates have a slot machined into them to guide the belt and are mounted on either side to completely contain the belt. They keep the belt in place as it goes around the sprockets and prevent the belt from jumping.
The use of driving terminals eliminates the need for catenary sag. The belt that is used must be flexible so that it can be compressed on the return thereby taking up any expansion of the belt. Furthermore, driving terminals ensure that the minimum engagement angle between the belt and the driving sprockets is 180°. The result is that a larger force can be transferred at the driving end than if you did not use a driving terminal. Figure 3-84 is a cross section of a typical side plate used in a driving terminal system.

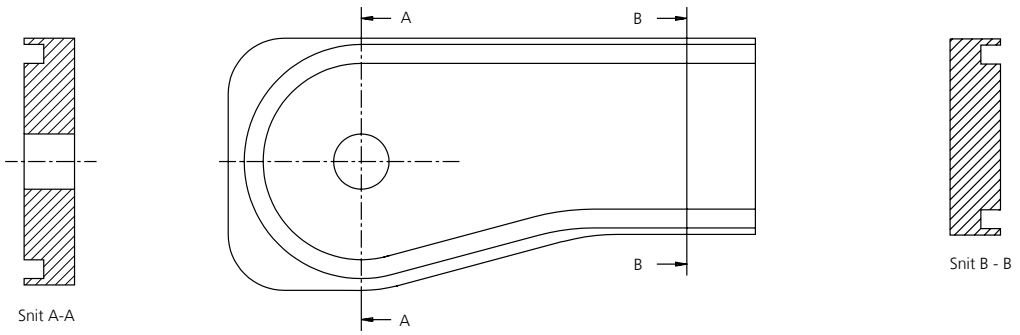

Figure 3-84

Advantages
- Space for catenary sag is not required. Very useful in applications with low headroom.
- Correct engagement between belt and sprockets is ensured under all operating conditions.
- Belt sprocket wrap of more than 180 degrees.
- Belt has positive release from sprocket.

Chain and Belt Material Listing and Properties

Plastic Materials, Temperature Range, Load Index and FDA

Material Grades	Temperature Range		Load/Permissible Load Index	FDA
	° C	° F		
POM - Polyoxymethylen[4/]	-40 to +90	-40 to +194	100% POM	✔
POM-DK - Polyoxymethylen	-40 to +90	-40 to +194	100% POM	-
POM-AS/NLAS - Semi Conductive Materials	-40 to +90	-40 to +194	100% POM	-
POM-EC - Electrical Conductive Materials	-40 to +90	-40 to +194	50% POM	-
PP - Polypropylene[2/ 3/]	+1 to +104	+34 to +219	100% PP	✔
PP-I - Polypropylene	-10 to +80	+14 to +176	80% PP	✔
PPMI - Metal Detectable Polypropylene	-10 to +80	+14 to +176	70% PP	✔
PPHW - Hot Water Polypropylene	+1 to +104	+34 to +219	100% PP	✔
PE - Polyethylene	-50 to +80	-58 to +176	100% PE	✔
PEMI - Metal Detectable Polyethylene	-50 to +80	-58 to +176	80% PE	✔
GR - Glass Reinforced Polyester[1/]	-40 to +125	-40 to +257	70% POM	✔
PBT - Polyester[1/]	-40 to +100	-40 to +212	-	✔
AR - Glass Reinforced Polypropylene	+1 to +80	+33 to +176	50% POM	-
FR - Flame Retardant Polyamide	+1 to +104	+34 to +219	90% POM	-
PVDF - Polyvinylidenfluoride	-40 to +100	-40 to +212	100% POM	✔
PA6 - Polyamide	-40 to +120	-40 to +248	100% POM	✔
PA6-GF - Polyamide Glass Reinforced	-40 to +120	-40 to +248	100% POM	-
PA6.6 - Polyamide	-40 to +140	-40 to +284	100% POM	✔
PA6.6-H - Polyamide	-40 to +160	-40 to +320	100% POM	-
PA6.6-GFH - Polyamide	-40 to +180	-40 to +356	100% POM	✔

1/ *Maximum temperature in water +60°C (+140°F).*

2/ *Avoid impact below +8°C (+46°F).*

3/ *Dry. In and hot applications, use PPHW. Please, note that the temperature has an effect on the mechanical properties of the belts.*

4/ *POM-D/DI/LF/SLF/NL/S/SX.*

Chain and Belt Material Listing and Properties

Steel and Stainless Steel

	Material Type		
	Hardened Steel	**Ferritic stainless Steel**	**Austenitic stainless Steel**
	S800 S810 S881 S881 TAB S Magnet type S881 SFL	SS802 SS812 SS881 SS881 TAB SS Magnet type SS881 SFL SS8811 SFL SS8811 SS8811 TAB	SS805 SS815 SS881 SS881 TAB SS881 SFL SS 8811 SFL SS8811 SS8811 TAB
Short Definition	C45	Werkstoff 1.4016 AISI 430	Werkstoff 1.4301 AISI 304
Detailed Definition	Hardened steel with a content of 0.45% carbon	A magnetic steel alloy where the main adds are 17.5% chrome	A non-magnetic steel alloy where the main adds are 18% chrome and 8% nickel
Advantages	High wearability Temperature range -70 to 430 °C (-94 to 806 °F) Hardened to 36 – 42 HRC High tensile strength	Good wearability Temperature range -70 to 430 °C (-94 to 806 °F) Good chemical resistance Better pricing compared to AISI 304	Good wearability Temperature range -70 to 430 °C (-94 to 806 °F) High corrosion resistance High chemical resistance
Disadvantages	Poor corrosion resistance Poor chemical resistance	Reduced chemical resistance compared to AISI 304 Reduced corrosion resistance (can develop spots in wet environments when not in use for several weeks)	Pricing
Normally used	Where a high wear resistance is required Automotive industry - handling steel parts	Where the demand for high corrosion resistance is not the main issue In a competitive market where pricing is important Breweries Glass handling	Where demands for a high corrosion resistance is required Where (almost) non-magnetic materials are required Chemical productions Not used very often on conveyors in wet environments

Chain and Belt Material Listing and Properties

Plastic Materials

	Material Type		
	POM- (D, LF, SLF)	**POM-EC**	**Glass Reinforced PP (AR)**
	Chains and Belts	Chains and Belts	Chains
Detailed definition	Polyoxymethylen	Polyoxymethylen electrically conductive	Polypropylene glass reinforced
Advantages	High tensile strength Good wearability Temperature range -40 to 90 °C (-40 to 194 °F)	Anti static properties Temperature range -40 to 90 °C (-40 to 194 °F)	Good chemical resistance Good wear resistance Temperature range 1 to 80 °C (33 to 176 °F)
Disadvantages	Pricing Relatively low chemical resistance	Pricing Limited physical properties	Limited physical properties
Normally used	Where there is a high wear In belts below 0 °C where PE not is strong enough In belts where PP is not strong enough Standard chain applications	Where a build up of static electricity must be avoided In aerosol fillers On conveyors directly served by humans	Where aggressive chemicals occur Where strong cleaning detergents occur

Chain and Belt Material Listing and Properties

Plastic Materials

	Material Type		
	PBT (GR)	**Polyamide (PA6, PA66)**	**Flame retardant polyamide (FR)**
	Chains and Belts	Chains and Belts	Chains and Belts
Detailed definition	Polybutylenterephthalat glass reinforced	Polyamide 6 Polyamide 6.6	Flame retardant Polyamide 6
Advantages	High wear resistance Temperature range -40 to 125 °C (-40 to 257 °F)	Good wear resistance Wide temperature area Temperature range -40 to 150 °C (-40 to 302 °F) High tensile strength	Restricts fire according to UV labs V-0 (extinguish all types of fire)
Disadvantages	Limited physical properties Poor chemical properties Does not work in water at temperatures above 60 °C (140 °F)	Pricing Poor chemical properties Absorption of water (in total the volume increases by approx. 1%)	Pricing Poor chemical properties Absorption of water (in total the volume increases by approx. 1%) Lower impact resistance
Normally used	Where high wear occurs (automotive industry)	In applications where the temperature is above the range of POM In applications where POM cannot stand the wear	In applications where there is a risk of burning

Chain and Belt Material Listing and Properties

Plastic Materials

	Material Type		
	Polycarbonate (PC)	**Polyvinylidenfluoride (PVDF)**	**Xenoy (Xenoy)**
	Chains (Snap-On chains only)	Chains and Belts	Belts
Detailed definition	Polycarbonate	Polyvinylidenfluoride	Xenoy
Advantages	Very high impact strength Temperature range -20 to 135 °C (-4 to 275 °F)	Good wear resistance Temperature range -40 to 100 °C (-40 to 212 °F) High chemical resistance	High impact resistance Temperature range -70 to 80 °C (-94 to 176 °F)
Disadvantages	Poor creep properties Impact properties disappear below 29 °C (84 °F)	Pricing	Low tensile strength Low wear resistance
Normally used	Where high impact occurs	Where aggressive chemicals occur	In applications where the temperature is low In applications with high impacts

Chain and Belt Material Listing and Properties

Plastic Materials

	Material Type		
	Polyethylene (PE)	**Polypropylene (PP)**	**-**
Normally	Belts	Belts	-
Detailed definition	Polyethylene High density	Polypropylene	-
Advantages	Low price Good chemical resistance Temperature range -50 to 80 °C (-58 to 176 °F) High impact strength Suitable for application with dry ice	Low price Good chemical resistance Temperature range 1 to 104 °C (34 to 219 °F)	-
Disadvantages	Poor tensile strength Poor creep properties	Becomes brittle at temperatures below 1 °C (34 °F) Poor impact strength Poor tensile strength	-
Normally used	Where a low price material is needed for use below 0°C (32 °F) Freezers	Where tensile strength and temperature enable it to be used or for chemical resistance	-

Factors

Values provided in the tables below are dynamic friction under clean conditions. Values will be 0.1 to 0.2 higher at the starting moment. If possible it is recommended to start the conveyor unloaded and gradually apply load.

Friction Factors

Material	UHMWPE Dry	UHMWPE Wet	UHMWPE with Oil	Nylatron NSM Dry	SS-steel Dry	SS-steel Wet
POM-NL	0.20	0.15	0.12	0.22	0.25	0.21
POM-D	0.19	0.14	0.12	0.21	0.24	0.20
POM-LF	0.18	0.13	0.12	0.20	0.23	0.19
POM-SLF	0.17	0.12	0.12	0.19	0.22	0.18
POM-SX	0.15	0.10	0.11	0.17	0.20	0.16
PP	0.25	0.20	0.15	0.28	0.30	0.27
PE	0.25	0.20	0.15	0.28	0.25	0.20
PA6	0.20	N/a	0.15	0.22	0.30	n/a
GR	0.26	0.22	0.18	0.29	0.32	0.25
AR	0.26	0.22	0.18	0.29	0.32	0.25

Temperature Factors

	POM	PP	PE	PA6.6	PA6.6-GFH
at -79 °C	n/a	n/a	1.35	n/a	n/a
at -40 °C	1.05	n/a	1.30	1.10	1.00
1 °C	1.05	1.00	1.10	1.05	1.00
20 °C	1.00	1.00	1.00	1.00	1.00
40 °C	0.95	0.85	0.50	0.90	1.00
60 °C	0.90	0.60	0.40	0.55	
80 °C	0.60	0.40	0.25	0.30	
90 °C	0.40	0.35	n/a	0.25	
100 °C	n/a	0.25	n/a	0.20	
120 °C	n/a	n/a	n/a	0.17	
140 °C	n/a	n/a	n/a	0.16	
126 °C	n/a	n/a	n/a	n/a	
180 °C	n/a	n/a	n/a	n/a	

In general

The plastic chains are not resistant to liquids with a pH-value lower than 4.5 or higher than 9.0. Cleaning with strong detergents should be avoided.

Smooth running is obtained by correct service, cleaning, lubrication and regular control.

Warning
If plastic chains and plastic wearstrips are used at temperatures higher than recommended or when welding there is a danger of ignition of the plastic material.

Note
- Flames from plastic material may be invisible.
- Ignited plastic material may generate poisonous smoke.

Chain Calculations

Tensile Forces

Variable Key

$\alpha°$	= Center angle for curve segment (degrees)
S_x	= Length of arch, m (ft)
F	= Tensile force, N (lbf)
m_p	= Product weight, kg/m (lbs/ft)
m_c	= Chain weight, kg/m (lbs/ft). See table on chain weights in the uni-chains chain catalog
L_x	= Horizontal length of conveyor section, m (ft)
K_{cw}	= Curve factor, chain-wearstrip. See table in appendix on page 99
K_{cp}	= Curve factor, chain-product. See table in appendix on page 99
R_x	= Center radius of conveyor section
μ_1	= Friction coefficient, chain-wearstrip. See table in appendix on page 97
μ_2	= Friction coefficient, chain-product. See table in appendix on page 97
C	= Force conversion factor. Metric: 9.8; Imperial: 1.0
$F_{adj.}$	= Maximum adjusted permissible tensile force, N (lbf)
SF	= Service factor. See table in appendix on page 98

Equations

Straight chain without accumulation
$F = (m_p + 2 \times m_c) \times L_1 \times \mu_1 \times C \times SF$

Straight chain with accumulation
$F = [(m_p + 2 \times m_c) \times L_1 \times \mu_1 + m_p \times \mu_2 \times L_1] \times C \times SF$

Sideflexing chain without accumulation
$F = (m_p + 2 \times m_c) \times S \times \mu_1 \times C \times K_{cw} \times SF$

Sideflexing chain with accumulation
$F = [(m_p + 2 \times m_c) \times S \times \mu_1] \times K_{cw} + m_p \times S \times \mu_2 \times K_{cp}] \times C \times SF$

Load control

The calculated tensile force in the chain should be lower than the adjusted permissible tensile force for that given chain. Such that $F \leq F_{adj.}$.
Be sure to apply temperature and speed factors to $F_{adj.}$ before checking against the calculated force.

Temperature and Speed dependent Tensile Force

The permissible tensile force depends on the temperature. Thus the permissible tensile force is reduced at working temperatures higher than 20 °C (68 °F). At working temperatures below +20 °C (+68 °F), a higher tensile force is permissible. However, note that at low temperature as the tensile force increases, the toughness will deteriorate, so that the material becomes more brittle. Speed also has an influence on permissible tension and we account for this with a speed factor. Plastic is limited by a combination of load and speed so as speed increases, permissible load must go down, and vice versa. Speed also has an influence on conditions like wear, fatique and noise.

Variable Key

$F_{perm.}$	= Maximum permissible force, N (lbf). See table in uni-chains belt catalog.
T	= Working temperature, °C (°F)
C_T	= Temperature factor. See table in appendix on page 98
C_S	= Speed factor. See table in appendix on page 98
$F_{adj.}$	= Maximum adjusted permissible tensile force, N (lbf)

Equation

$F_{adj.} = C_T \times C_S \times F_{perm.}$

Chain Calculations

Conveyor with straight running and sideflexing Chains

The following shows examples of conveyors with both straight running and sideflexing chains. See figure 5-1.

An overall tensile force at the drive end is to be calculated as:

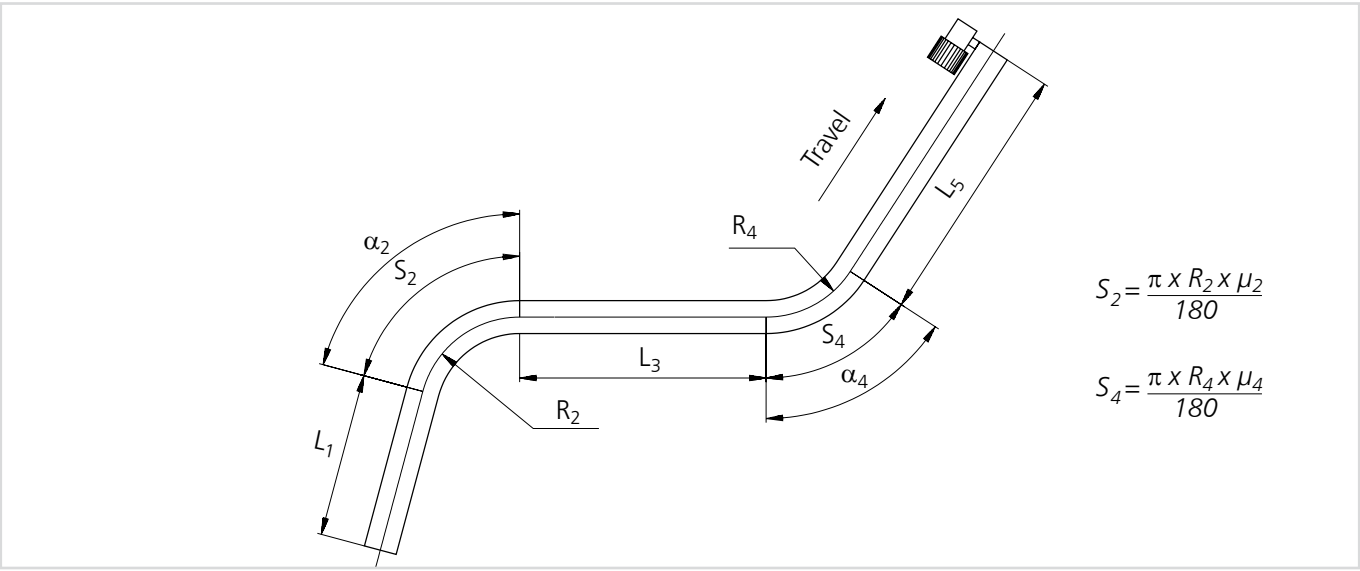

Figure 5-1

Traction without Accumulation

Section 1 at 1
$F_1 = (m_p + 2 \times m_c) \times L_1 \times \mu_1 \times C$

Sections 1 and 2 at 2
$F_2 = [F_1 + (m_p + 2 \times m_c) \times S_2 \times \mu_1 \times C] \times K_{cw}$

Sections 1, 2 and 3 at 3
$F_3 = F_2 + (m_p + 2 \times m_c) \times L_3 \times \mu_1 \times C$

Sections 1, 2, 3 and 4 at 4
$F_4 = [F_3 + (m_p + 2 \times m_c) \times S_4 \times \mu_1 \times C] \times K_{cw}$

Sections 1, 2, 3, 4 and 5 at 5
$F_5 = [F_4 + (m_p + 2 \times m_c) \times L_5 \times \mu_1 \times C] \times SF$

Traction with Accumulation

Section 1 at 1
$F_1 = [(m_p + 2 \times m_c) \times L_1 \times \mu_1 + m_p \times \mu_2 \times L_1] \times C$

Section 1 and 2 at 2
$F_2 = [F_1 + (m_p + 2 \times m_c) \times S_2 \times \mu_1 \times C] \times K_{cw} + m_p \times S_2 \times \mu_2 \times C$

Sections 1, 2 and 3 at 3
$F_3 = F_2 + (m_p + 2 \times m_c) \times L_3 \times \mu_1 \times C + m_p \times L_3 \times \mu_2 \times C$

Sections 1, 2, 3 and 4 at 4
$F_4 = [F_3 + (m_p + 2 \times m_c) \times S_4 \times \mu_1 \times C] \times K_{cw} + m_p \times S_4 \times \mu_2 \times K_{cp} \times C$

Sections 1, 2, 3, 4 and 5 at 5
$F_5 = [F_4 + (m_p + 2 \times m_c) \times L_5 \times \mu_1 \times C + m_p \times L_5 \times \mu_2 \times C] \times SF$

Load Control
$F_5 \leq F_{adj.}$

Chain Calculations

Conveyor with Inclination

The following shows example of conveyor with inclination: See figure 5-2.

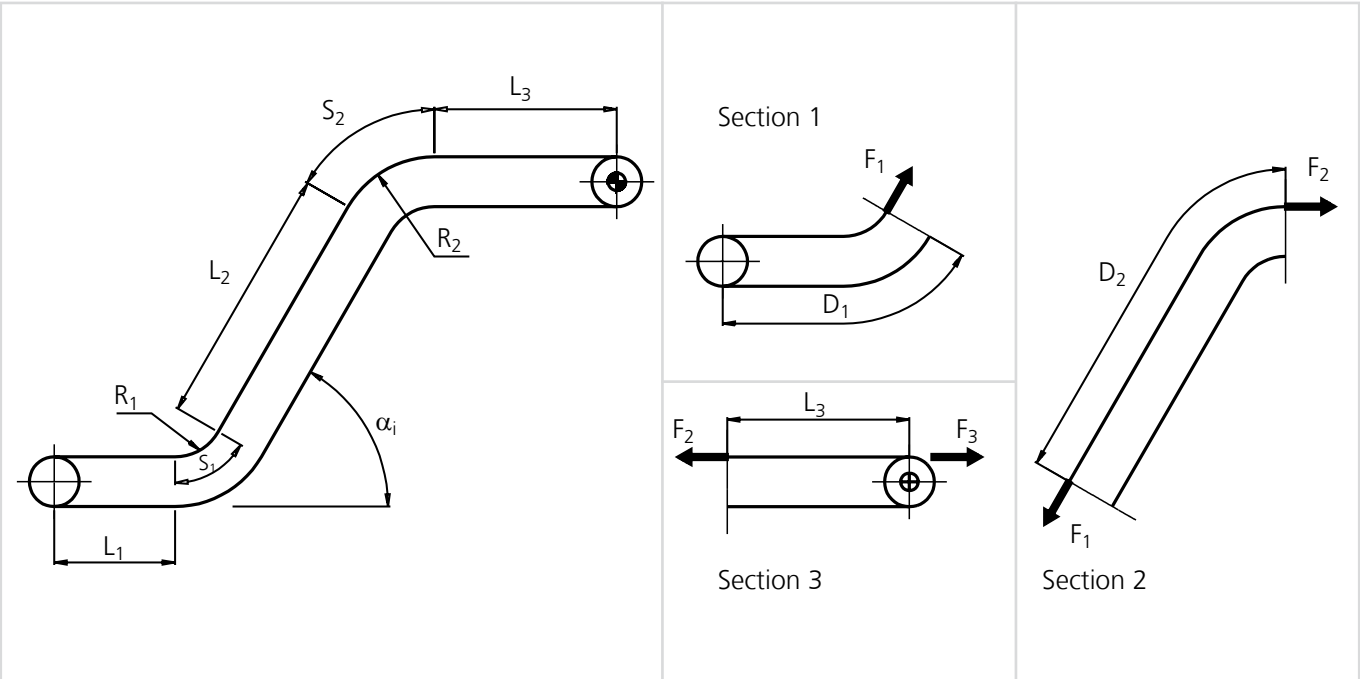

Figure 5-2

Variable Key

α_i °	= Inclination angle (degrees)
F	= Tensile force, N (lbf)
L_x	= Length of straight section, m (ft)
S_x	= Length of arch, m (ft)
D_x	= Length of section, m (ft)
m_p	= Product weight, kg/m (lbs/ft)
m_c	= Chain weight, kg/m (lbs/ft). See table on chain weights in uni-chains chain catalog
μ_1	= Friction coefficient, chain-wearstrip. See table in appendix on page 97
K_{inc}	= Inclination factor. Same as curve factor. See table in appendix on page 99
C	= Force conversion factor. Metric: 9.8; Imperial: 1.0
$F_{adj.}$	= Maximum adjusted permissible tensile force, N (lbf). See on page 63
SF	= Service factor. See table in appendix on page 98

Equations

$F_1 = (2 \times m_c + m_p) \times \mu_1 \times D_1 \times C \times K_{inc}$ $\quad D_1 = L_1 + S_1 \quad S_1 = \frac{\pi \times R_1 \times \alpha_i}{180}$

$F_2 = [F_1 + m_p \times (\mu_1 \times \cos \alpha_i + \sin \alpha_i) \times C \times D_2] \times K_{inc}$ $\quad D_2 = L_2 + S_2 \quad S_2 = \frac{\pi \times R_2 \times \alpha_i}{180}$

$F_3 = [F_2 + (2 \times m_c + m_p) \times \mu_1 \times L_3 \times C] \times SF$

Load Control

$F_3 \leq F_{adj.}$

Chains Calculations

Serpentine

Calculation of Center Distance between Turn Discs
To obtain the best serpentine construction we recommend a certain center distance between the turn discs. See figure 5-3.

To determine the center distance between the turndiscs, L_{min}, it is necessary to know the height difference between two turn (h) discs as there must be a suitable clearance between the products and the turn disc section above (h_f).

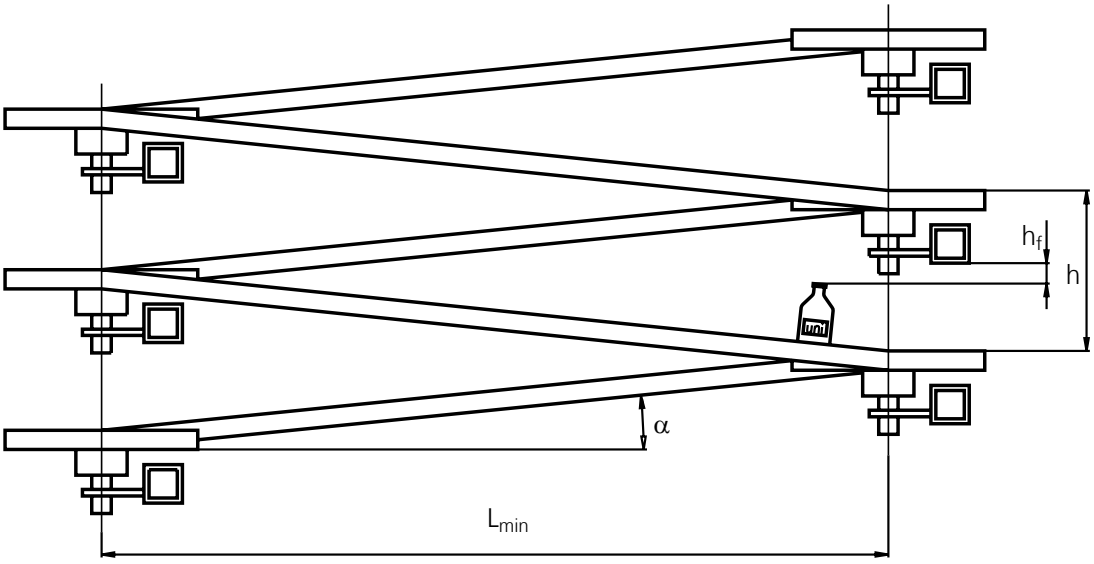

Figure 5-3

Variable Key

L_{min}	= Minimum center distance between the turn discs
h	= Height difference between the turn discs
α	= Inclination on the straight lengths
h_f	= Clearance between product and turn

Equation

$$L_{min} = \frac{h}{2 \times \tan \alpha}$$

Chain Calculations

Serpentine

Determination of Tensile Force in the Chain

Variable Key

F_C = Tensile force in the chain, N (lbf)
A = Tensile force per straight length, N (lbf)
L = Center distance between turn discs, m (ft) $L \geq L_{min.}$
m_p = Product weight, kg/m (lbs/ft)
m_c = Chain weight, kg/m (lbs/ft). See table on chain weights in uni-chains chain catalog
μ_1 = Friction coefficient, chain-wearstrip. See table in appendix on page 97
μ_2 = Friction coefficient, chain-product. See table in appendix on page 97
$\alpha_i°$ = Inclination angle for straight section
R = Turn disc radius, m (ft)
C = Force conversion factor. Metric: 9.8; Imperial: 1.0
$F_{adj.}$ = Maximum adjusted permissible tensile force, N (lbf). See table on page 63
SF = Service factor. See table in appendix on page 98

Equations

$F_C = [\sum A] \times SF$

$$A = [\frac{L}{\cos \alpha} [(m_c + m_p)(\sin \alpha_i + \mu_1 \times \cos \alpha_i) + m_p \times \mu_2 \times \cos \alpha_i] + \pi \times R \times [\mu_1 \times (m_p + m_c) + \mu_2 \times m_p]] \times C$$

Load Control

$F_C \leq F_{adj.}$

Belt Calculations

Tensile Forces

The tensile force in a straight running belt conveyor with horizontal transport can be calculated by using of below equation. See figure 5-4.

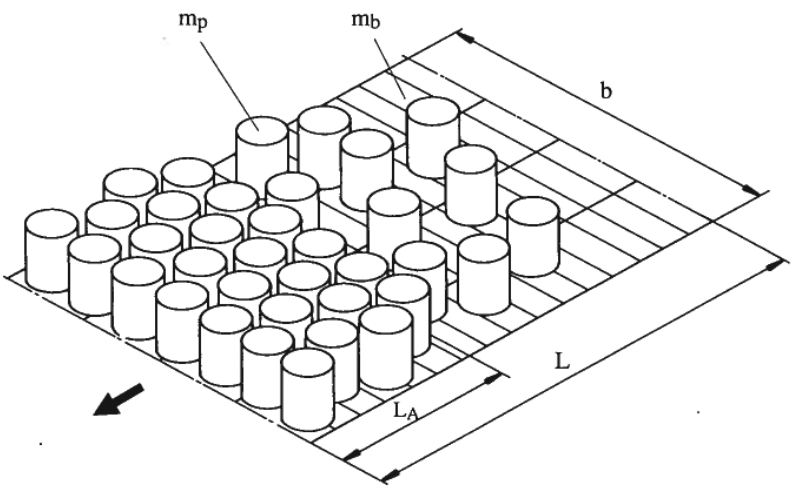

Figure 5-4

Variable Key

F_B	= Tensile force in the belt, N (lbf)
m_p	= Product weight, kg/m^2 (lb/ft^2)
m_b	= Belt weight, kg/m2 (lb/ft^2). See table on belt weights in uni-chains belt catalog
L	= Conveyor length, m (ft)
L_A	= Length where accumulation occurs, m (ft)
μ_1	= Friction coefficient, belt-wearstrip. See table in appendix on page 97
μ_2	= Friction coefficient, belt-product. See table in appendix on page 97
b	= Belt width, m (ft)
$F_{adj.}$	= Maximum adjusted permissible tensile force. See table in appendix on page 63
C	= Force conversion factor. Metric: 9.8; Imperial: 1.0
SF	= Service factor. See table in appendix on page 98

Equations

$$F_1 = [[(m_p + 2 \times m_b) \times L \times \mu_1 + m_p \times L_A \times \mu_2] \times b \times C] \times SF$$

The possibilities of choosing a different belt material, using reinforcement links in the belt or changing in the parameters m_p, L, L_A, μ_1 or μ_2 should be considered if their load is too heavy.

Load Control

$$\frac{F_B}{b} < F_{adj.}$$

Belt Calculations

Conveyor with Inclination

Calculation of necessary minimum speed, when product quantity per hour is known.
There are two different situations.

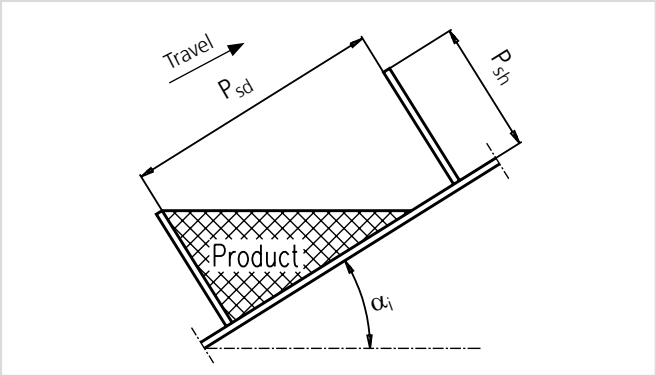

Figure 5-5 Situation 1

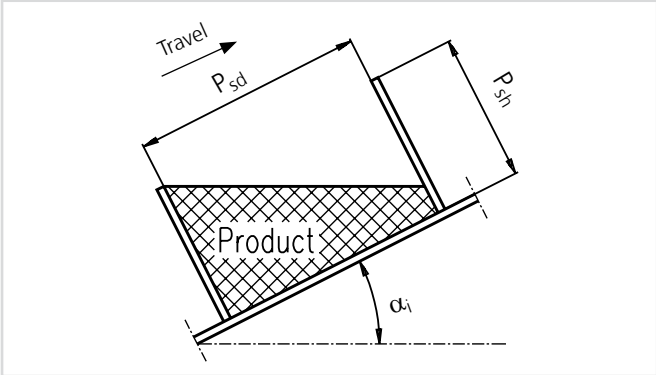

Figure 5-6 Situation 2

Variable Key

V_b	= Necessary minimum speed, m/min. (ft./min.)
P_{sw}	= Effective width of product support, m (ft.)
P_{sh}	= Height of product support, m (ft.)
P_{sd}	= Distance between product supports, m (ft.)
P_{wh}	= Transported product weight per hour, kg (lbs)
ρ_p	= Density of product, kg/m³ (lbs/ft³)

1. The distance between the product supports will allow the product to lie as shown on figure 5-5.
2. The distance between the product supports will allow the product to lie as shown on figure 5-6.

By use of the following formula, you can determine the situation:

If InvTAN $\left(\frac{P_{sh}}{P_{sd}}\right) \leq \alpha_i$ - *you have situation 1 on figure 5-5*

If InvTAN $\left(\frac{P_{sh}}{P_{sd}}\right) > \alpha_i$ - *you have situation 2 on figure 5-6*

Necessary minimum speed according to situation 1

$$V_b = \frac{P_{wh} \times P_{sd} \times 2 \times TAN(\alpha_i)}{P_{sh}^2 \times P_{sw} \times \rho_p \times 60}$$

Necessary minimum speed according to situation 2

$$V_b = \frac{Pwh}{(P_{sh} - 0.5 \times P_{sd} \times TAN(\alpha_i)) \times P_{sw} \times \rho_p \times 60}$$

Belt Calculations

Conveyor with Inclination

The following shows an example of conveyor with inclination: See figure 5-7.

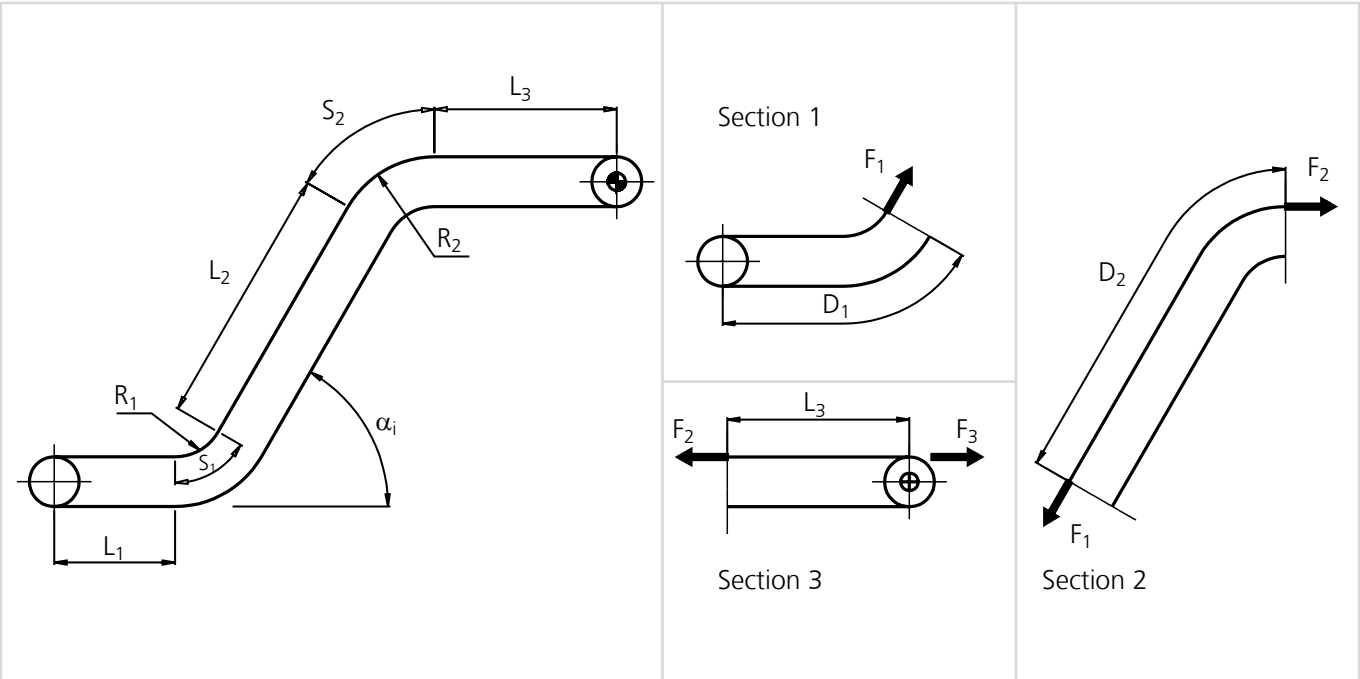

Figure 5-7

Variable Key

α_i °	= Center angle for curve segment (degrees)
F	= Tensile force, N (lbf)
L	= Length of the conveyor section, m (ft)
m_p	= Product weight, kg/m^2 (lb/ft^2)
m_b	= Belt weight, kg/m^2 (lb/ft^2). See table on belt weights in uni-chains belt catalog
μ_1	= Friction coefficient, belt-wearstrip. See table in appendix on page 97
K_{inc}	= Inclination factor. Same as curve factor. See table in appendix on page 99
b	= Belt width, m (ft)
C	= Force conversion factor. Metric: 9.8; Imperial: 1.0
$F_{adj.}$	= Maximum adjusted permissible tensile force, N (lbf). See table in appendix on page 63
SF	= Service factor. See table in appendix on page 98

Equations

$F_1 = (2 \times m_b + m_p) \times \mu_1 \times D_1 \times b \times C \times K_{inc}$ $\quad D_1 = L_1 + S_1 \quad S_1 = \frac{\pi \times R_1 \times \alpha_i}{180}$

$F_2 = [F_1 + m_p \times (\mu_1 \cos \alpha_i + \sin \alpha_i) \times C \times D_2 \times b] \times K_{inc}$ $\quad D_2 = L_2 + S_2 \quad S_2 = \frac{\pi \times R_2 \times \alpha_i}{180}$

$F_3 = [F_2 + (2 \times m_b + m_p) \times \mu_1 \times L_3 \times C] \times SF$

Load Control

$\frac{F_3}{b} \leq F_{adj.}$

Belt Calculations

Reinforcement of Belt Systems

Variable Key

$F_{B,b}$ = Tensile force in the belt, N/m (lbf/ft)
$E_{perm.}$ = Maximum permissible tensile force for the reinforcement links, N/pcs (lbf/pcs)
$n_{mod.}$ = Number of reinforcement links per module, Ea
$n_{met.}$ = Number of reinforcement links per meter, Ea
$n_{ft.}$ = Number of reinforcement links per feet, Ea

Permissible tensile force for the reinforcement links $E_{perm.}$ can be found in the uni-chains belt catalog.

Note: uni Flex SNB can only accommodate two rows of reinforcement links on the outer edge of the turn radius.

Required number of reinforcement links per meter/feet

Metric

$$n_{met.} \geq \frac{F_{B,b}}{E_{perm.}}$$

Imperial

$$n_{ft.} \geq \frac{F_{B,b}}{E_{perm.}}$$

Required number of reinforcement links per module

Metric

$$n_{mod} = \frac{n_{met.}}{6.56}$$

Imperial

$$n_{mod} = \frac{n_{ft.}}{2}$$

Belt Calculations

Expansion and Contraction of the Belt

Expansion/contraction of the belt may occur at special working conditions where the belt is exposed to changes in temperature.

Such changes in the belt width and belt length must be taken into consideration when the conveyor is constructed.

Variable Key

ΔL = Length/width expansion, mm (in.)
L = Length/width of belt at temperature T_1, m (ft)
T_2 = Working temperature, °C (°F)
T_1 = Surrounding temperature, °C (°F)
e_c = Expansion coefficient. See table below.

Expansion Coefficients (e_c)

	$\frac{mm}{m \times °C}$	$\frac{in.}{ft \times °F}$
POM	0.12	0.0008
PP	0.13	0.0009
PE	0.18	0.0012
PA6/PA6.6	0.11	0.0007

The change in belt dimensions formula

$$\Delta L = L \times e_c \times (T_2 - T_1)$$

Expansion/contraction in the longitudinal direction can be minimized by use of steel reinforcement links.

Determining Number of Sprockets for Belt Systems

The number of sprockets required for the belt conveyor depends on the load on the belt and the temperature under which the conveyor is working. As a rule of thumb uni-chains recommends a minimum of one sprocket per 6 in. module. Below is the equation to determine the minimum number of sprockets needed.

Variable Key

n_{sp} = Minimum number of sprockets required for the belt, Ea
b = Belt width, m (ft)
$SP_{perm.}$ = Permissible load per sprocket, N/Ea (lbf/Ea). See uni-chains belt catalog.
F_B = Tensile force in the belt, N(lbf).

Metric

$$n_{sp.} \approx \frac{b}{0.1524} + 1$$

Imperial

$$n_{sp.} \approx \frac{b}{0.5} + 1$$

Belt Calculations

Determining Number of Sprockets for Belt Systems

Permissible load per sprocket differs for each belt and material combination and can be found in the uni-chains belt catalog. Care must be taken that the selected belt can accommodate the number of sprockets required. Number of sprocket paths, placement of tabs and reinforcement links must be considered when determining the possible number of sprockets.

After having calculated the quantity of sprockets, it is necessary to make a control in order to see, if there are enough sprockets considering the load.

By use of the following formula, you can control this:

$$n_{sp} \geq \frac{F_B}{SP_{perm.}}$$

General Calculations

Catenary Sag

A freely hanging conveyor belt will form a belt arch between two supports. Knowing the amount of belt absorbed in the belt arch and the load from the belt arch is important. See figure 5-8.

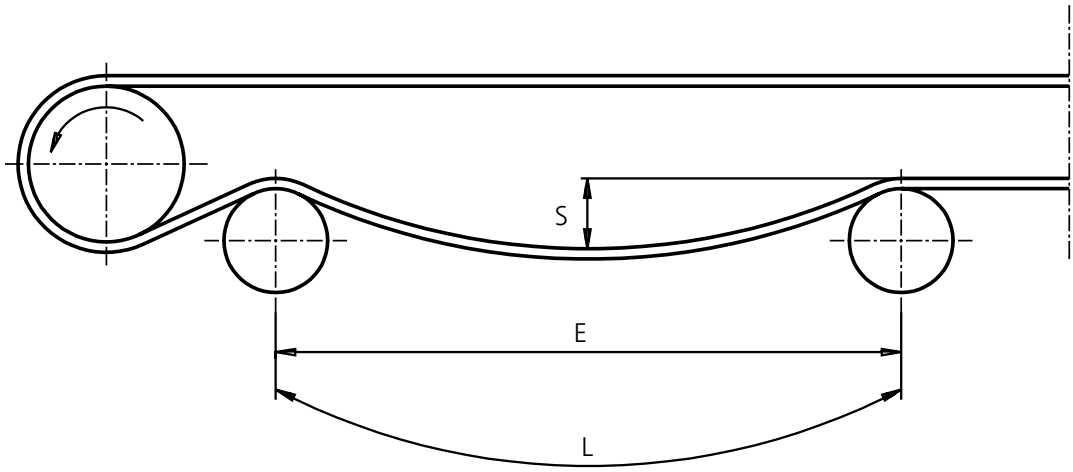

Figure 5-8

Variable Key

L	= Length of belt arch, m (ft)
F	= Tension from the belt arch, N (lbf) of belt width
E	= Distance between supports, m (ft)
b	= Belt width, m (ft)
m_b	= Belt weight, kg/m^2 (lb/ft^2). See table on belt weights in uni-chains belt catalog
S	= Catenary sag, m (ft)
C	= Force conversion factor. Metric: 9.8; Imperial: 1.0

Length of Belt Arch

$$L \approx \frac{2.66 \times S^2}{E} + E$$

Load from the Belt Arch

$$\frac{E^2 \times m_b \times b \times C}{8 \times S}$$

Generel Calculations

Dimensioning of the Motor

Variable Key

P	= The required power, kW (HP)
F	= Tensile force in belt or chain, N (lbf)
v	= Belt or chain speed, m/min. (ft/min.)
η	= Efficiency of gear
T	= Torque on drive shaft, Nm (lbfft)
GR	= Gear ratio
R_{dm}	= Number of revolutions on drive motor, RPM
R_{ds}	= Number of revolutions on drive shaft, RPM
P_d	= Pitch diameter of drive sprocket, mm (in.)

Required Power

Metric

$$P = \frac{F \times v}{60000 \times \eta}$$

Imperial

$$P = \frac{F \times v}{33000 \times \eta}$$

Note: In this formula allowance for losses is not made in other mechanical parts than the gear. When calculating conveyors with inclination, allowance must be made for the energy required for lifting the product and then chain or belt.

Torque on Drive Shaft

Metric

$$T = \frac{F \times P_d}{2000}$$

Imperial

$$T = \frac{F \times P_d}{24}$$

Number of Revolutions on Drive Shaft, RPM

Metric

$$R_{ds} = \frac{v \times 1000}{P_d \times \pi}$$

Imperial

$$R_{ds} = \frac{v \times 12}{P_d \times \pi}$$

Number of Revolutions on Drive Motor

$$R_{dm} = R_{ds} \times GR$$

Generel Calculations

Dimensioning of the Shaft (Steel)

Round Shaft

Variable Key

d = Minimum diameter of drive shaft, mm (in.)
p_d = Pitch diameter of drive sprocket, mm (in.)
F = Tensile force in the chain or belt, N (lbf)

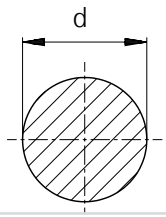

Figure 5-9

Minimum Diameter of round Drive Shaft

Metric

$$d \geq 0.51 \times \sqrt[3]{p_d \times F}$$

Imperial

$$d \geq 0.1 \times \sqrt[3]{p_d \times F}$$

Hollowed round Shaft

Variable Key

d = Minimum diameter of drive shaft, mm (in.)
d_i = Inside diameter of drive shaft, mm (in.)
d_0 = Pitch diameter of drive sprocket, mm (in.)
F = Tensile force in the chain or belt, N (lbf)

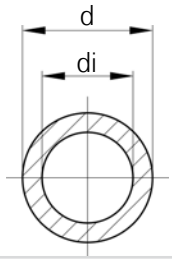

Figure 5-10

Minimum Diameter of hollowed Drive Shaft

Metric

$$d \geq 0.51 \times \frac{\sqrt[3]{p_d \times F}}{\sqrt[3]{1 - \left(\frac{d_i}{d}\right)^4}}$$

Imperial

$$d \geq 0.1 \times \frac{\sqrt[3]{p_d \times F}}{\sqrt[3]{1 - \left(\frac{d_i}{d}\right)^4}}$$

Square Shaft

Variable Key

b = Minimum outside dimension of square drive shaft, mm (in.)
d_0 = Pitch diameter of drive sprocket, mm (in.)
F = Tensile force in the chain or belt, N (lbf)

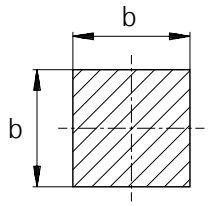

Figure 5-11

Minimum Diameter of Square Drive Shaft

Metric

$$b \geq 0.48 \times \sqrt[3]{p_d \times F}$$

Imperial

$$b \geq 0.09 \times \sqrt[3]{p_d \times F}$$

Hollowed Square Shaft

Variable Key

b = Minimum outside dimension of hollowed square drive shaft, mm (in.)
a = Inside dimension of hallowed square drive shaft, mm (in.)
p_d = Pitch diameter of drive sprocket, mm (in.)
F = Tensile force in the chain or belt, N (lbf)

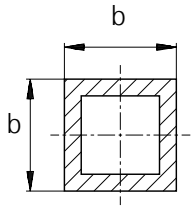

Figure 5-12

Refer to Section on Control in Shaft, Deflection of Shaft and Torsion in Shaft (page 74).
Also see Intermediate Bearings for prevention of shaft deflection (page 20).

Minimum Diameter of hollowed square Drive Shaft

Metric

$$b \geq 0.48 \times \frac{\sqrt[3]{p_d \times F}}{\sqrt[3]{1 - \left(\frac{a}{b}\right)^4}}$$

Imperial

$$b \geq 0.09 \times \frac{\sqrt[3]{p_d \times F}}{\sqrt[3]{1 - \left(\frac{a}{b}\right)^4}}$$

Hexagon Shaft

Variable Key

C = Width across flats, mm (in.)
d_0 = Pitch diameter of drive sprocket, mm (in.)
F = Tensile force in the chain or belt, N (lbf)

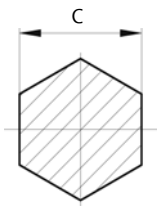

Figure 5-13

Minimum width across flats of Hexogon Drive shaft

Metric

$$c \geq 0.51 \times \sqrt[3]{p_d \times F}$$

Imperial

$$c \geq 0.1 \times \sqrt[3]{p_d \times F}$$

Generel Calculations

Control of Shaft Deflection of the Shaft under Stress

Variable Key

u	= Deflection, mm (in.)
F_1	= Shearing force , N (lbf)
F_B	= Tensile force in the belt , N (lbf)
m_s	= Drive shaft weight, kg/mm (lb/ft)
l_1	= Total shaft length, mm (ft)
l_S	= Shaft length, between outer bearings, mm (in.)
E*	= Modulus of elasticity for shaft material, N/mm² (lbf/in.²)
I	= Inertia force for drive shaft, mm⁴ (in.⁴). See table below.
C	= Force conversion factor. Metric: 9.8; Imperial: 1.0

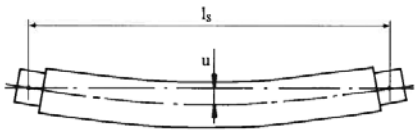

Figure 5-14

* E = 210000 N/mm² for Carbon Steel
* E = 195000 N/mm² for Stainless Steel
* E = 70000 N/mm² for Aluminium

Shaft Type	Inertia Forces
Round	$I = \frac{\pi \times d^4}{64}$
Hollow Round	$\frac{\pi \times (d^4 - (d - 2 \times t)^4)}{64}$
Square	$I = \frac{b^4}{12}$
Hollow Square	$I = \frac{b^4 - (b - 2 \times t)^4}{12}$
Hexagon	$I = 0.963 \times \left(\frac{c}{2}\right)^4$

d = diameter of round shaft
b = width of square shafts
t = thickness of the hollowed shaft
c = width across flats

Find the shearing Force on the Shaft

$$F_1 = \sqrt{F_B{}^2 + (m_s \times l_1 \times C)^2}$$

Now you can find the Deflection in the Shaft/for 2 Bearings

$$u = \frac{5 \times F_1 \times l_s^3}{384 \times E \times I}$$

For 3 bearings

$$u = \frac{F_1 \times L_s^3}{2960 \times E \times I}$$

The maximum permissible deflection "u" of a shaft is 2.5 mm (0.1 in.)

Torsion in the Shaft under Stress

Variable Key

$\phi°$ = Torsion angle. See figure 5-12.
F_B = Traction in belt, N (lbf)
p_d = Pitch diameter of drive sprocket, mm (in.)
l_s = Shaft length, between outer bearings, mm (in.)
G* = Modulus in shear of the shaft material, N/mm² (lbf/in.²)
I_t = Torsional inertia force, mm⁴ (in.⁴). See table below.

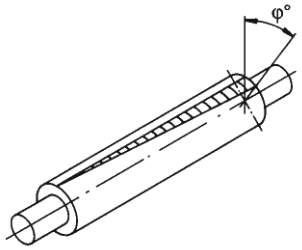

Figure 5-15

* G = 80000 N/mm² for Carbon Steel
* G = 75000 N/mm² for Stainless Steel
* G = 27000 N/mm² for Aluminium

Shaft Type	Inertia Forces
Round	$\frac{\pi \times d^4}{32}$
Hollow Round	$I_t = \frac{\pi \times (d^4 - (d - 2 \times t)^4}{32}$
Square	$I_t = 0.141 \times b^4$
Hollow Square	$I_t = 0.127 \times (b^4 - 2 \times t)^4$
Hexagon	$I_t = 1.847 \times \left(\frac{c}{2}\right)^4$

d = diameter of round shaft
b = width of square shafts
t = thickness of the hollowed shaft
c = width across flats

Find the actual Torsion Angle with this Formula

$$\phi° = \frac{90 \times F_B \times p_d \times l_s}{\pi \times G \times I_t}$$

Load Control

Metric

$$\phi°_{permisseble} < \frac{0.5 \times l_s\ (mm)}{1000}$$

Imperial

$$\phi°_{permisseble} < \frac{0.5 \times l_s\ (in.)}{39.37}$$

Installation Guidelines

Assembly instructions for uni-chains belts with various locking systems are available. Please contact uni-chains for these instructions or download them at www.unichains.com

Maintenance Guidelines

Service

All parts of a conveyor should be inspected regularly to ensure the longest wear life possible for chain and wearstrips. The following points should be controlled at the inspection:

1. Examine the chain wear
2. Check that the chain can run freely between the wearstrips, at transfer plates etc.
3. Check the chain for cracks
4. Check the chain for elongation/catenary sag
5. Examine the chain sprockets for wear
6. Examine the wearstrips
7. Check shoes and rollers for wear

Replacement of Conveyor Parts

Chain and belt should be replaced when:
1. The chain has been extended so much that it does not fit the drive sprocket
2. The chain is worn below half the plate thickness
3. The chain surface is worn unevenly
4. The bottom parts of the chain is worn so much that the pins are laid bare. The pins can then damage the wearstrips and other conveyor parts
5. Tab or belt edge is worn on sideflexing belts

Sprockets should be replaced when:
1. The tooth profiles are worn
2. The chain jumps the sprocket

Wearstrips should be replaced when:
1. They are worn 50%
2. The surface finish has become rough
3. Hard particles have become embedded into the wearstrip material

Special care must be taken to inspect curved wearstrip sections for wear, since excessive wear can result in the chain pulling out of the conveyor in curves.

Cleaning Guidelines

Following is a method for cleaning a conveyor. When cleaning a conveyor, always clean top to bottom and from the center out. This will be the most efficient method.

1. Dry Clean
Remove large pieces of debris from the belting/chain. Ensure the sprockets, shafts and supporting features (guide rails, product supports, etc.) are also cleaned of debris.

2. Pre-rinse
Rinse the conveyor system with water heated to 52-54°C (125-130°F) and at a pressure of 150-300 psi (10-20 bar).

3. Apply detergent
Apply selected detergent to the conveyor at a pressure of 150 psi (10 bar). Let the detergent work for 10-15 minutes, but do not let it dry as this can create chemical build up that is harder to remove.

4. Rinse and inspect
Heavily rinse the conveyor at 40-60 psi (2.8-4.1 bar) with water at 52-54°C (125-130°F). Next inspect the conveyor and make sure that debris, detergent, water and other residue have been washed away. Use sight, smell and touch. Care should be taken when using strong detergents.

5. Pre-Op the belt
Re-inspect the conveyor and make sure all chemical detergent has been removed from the conveyor. To ensure this, using pH strips (litmus paper) will ensure that any basic solution has been removed. Run the conveyor slowly to help the conveyor dry and remove pooled water from the surrounding ground while the conveyor is drying.

6. Inspect and release for sanitizing
Inspect the belt again using sensory analysis to detect the presence of bacteria. To verify the presence of bacteria, adenosine triphosphate (ATP) testing should be used. ATP is present in all animal, vegetable, yeast and mold cells. If the ATP testing shows that any of these exist, clean the detected area. Re-lubricate the conveyor if necessary. Next, release the belt for sanitizing.

7. Sanitizing
Running the conveyor again at a slow speed, apply the sanitizer in small concentrations as directed by the manufacturer so that the conveyor does not have to be rinsed. Running the conveyor during this process will ensure that all parts of the conveyor have been exposed to the sanitizer. Clean up any pooled sanitizer and wash it down a drain.

Special conditions

For specific types of machinery, special conditions are valid concerning cleaning. The types of machinery with these conditions are given in the following:

1. Cutting conveyor
The cutting conveyor may be mounted with a Clean In Place (CIP) cleaning device, soaking/rinsing the inside of the conveyor belt via nozzles.

If this is the case, the cutting conveyor must be connected to hot water, min. 70° C, no less than 10 minutes prior to cleaning. The connection is situated at the drive end of the cutting conveyor, Turn on the water, start the cutting conveyor and let it run for no less than 10 minutes. This loosens/rinses off any meat debris on the inside of the belt.

Disconnect the water supply when the cleaning is terminated.

2. Sterilizers
The cleaning instructions for the SMS equipment generally also apply for the sterilizer. However, the following exceptions are to be observed:

Do not use detergent containing acid. Sensors, heaters, etc. should not be cleaned with detergents but can be disinfected according to the current standard.

Specifically heaters where applicable are to be cleaned periodically for lime using acetic or citric acid according to the mixing ratio and instructions stated on the product.

Do not use acetic or citric acid on any other part of the sterilizer, especially not plastic components such as e.g. the lid. Under no circumstances, will these parts stand the influence of acetic or citric acid.

Use a cloth when applying the acid on the heater.

Note: Use protection equipment such as gloves and waterproof clothes. Rinse off with large amounts of water. Application time is given by the instructions on the product in question.

Troubleshooting Guidelines

uni-chains belt systems have been designed to be maintenance free, however, as with all machinery, conveyors can occasionally experience mechanically-related issues that require attention and diagnosis. This guide will serve as assistance in solving any mechanically-related issue that may occur on conveyors using uni-chains belts. If you require further assistance, information or additional copies of this guide, please contact uni-chains engineering or look at our homepage www.unichains.com. You will also be able to download belt installation and assembly instructions on our website.

Straight running Belts

Problem	Possible Problems	Solution
1. Belt is jumping off the sprockets or not engaging properly	Incorrect catenary sag	Ensure catenary sag on return side of belt is as recommended by uni-chains engineering department or engineering manual. Too much slack can reduce wrap angle or not provide proper back tension on the sprocket
-	Incorrect shaft location relative to belt ("A" dimension)	Compare existing shaft location to the recommended A dimension in the uni-chains belt catalog. Adjust drive shaft as necessary to meet these dimensions
-	Incorrect belt return design	Ensure belt returnway allows clearance for the necessary catenary sag. If needed adjust return rollers or remove slider return strips to get proper sag. Contact uni-chains engineering for assistance
-	Sprockets not aligned correctly with each other	Check that sprocket teeth are aligned with each other across the shaft so that they all engage the belt at the same location. Many sprockets have timing marks that should be placed in alignment all the way across the shaft
-	Insufficient belt wrap around drive sprockets	Relocate the first catenary support roller to ensure proper belt wrap around drive sprockets. Check if excess slack in the catenary is causing the wrap angle to be reduced. Remove slack if necessary
-	Drive and idle shafts are not parallel with each other	Check the alignment using the methods described in the aligning shafts section of the uni-chains engineering manual. Correct if necessary
-	Locked sprocket on drive and idle shafts are not in line with respect to each other	The locked drive and idle sprockets must be in the same location on the shaft relative to each other. Check for alignment and adjust if necessary
-	Sprockets are not engaged properly with the belt	Some sprockets have defined travel directions that must be maintained to drive the belt. Some belts have defined sprocket paths. Consult installation guidelines for more information

Troubleshooting Guidelines

Straight running Belts

Problem	Possible Problems	Solution
2. Excessive belt and/or pin wear	Belts, sprockets or wearstrip exposed to abrasive particles	Eliminate or reduce the exposure of the belt, sprockets or wearstrips to abrasive materials. Replace wearstrip material if it has become embedded with particles
-	Incorrect wearstrip material	Ensure wearstrip material is correct for the belt material, load and speed combination as well as environmental conditions.Contact uni-chains for assistance in wearstrip choice
-	Binding of belt in the conveyor frame	Examine the conveyor to ensure it is level and square. Look for any concentrated wear points on the belt or frame. These are spots where the belt is rubbing causing wear. Correct the frame to eliminate these contact points
-	Incorrect or uneven product loading	Add support under loading area of belt. Take measures to reduce the relative motion between product and belt. If product is side loaded, add an edge guide to opposite side to support the belt
-	Excessive belt speed	High speed belts, especially those on shorter length conveyors, will wear more quickly than belts at lower speeds. Reduce belt speed if possible
-	Too many backflex and front flex points	The more times the belt hinge must pivot around the pin, the more quickly it will wear. Center drives, take-up systems with multiple rollers, and transition points where the belt goes from horizontal to incline are examples where the belt must front or back flex. The more of these that can be eliminated the less quickly the belt will wear
-	Incorrect wearstrip spacing or arrangement	Ensure wearstrip spacing and configuration is optimized for the load on the belt, belt style and environmental conditions. Contact uni-chains engineering for assistance
-	Exposed fasteners or other obstructions on carryway or return	Look for points of wear on the belt to get clues to where they are coming from on the conveyor frame. Remove or repair any obstructions
-	Sharp corners on carryway or return wearstrips	Be sure the leading edge of any carryway or return wearstrips or other bearing surface are beveled to ensure the belt can move unobstructed

Straight running Belts

Problem	Possible Problems	Solution
3. Belt not tracking properly	Drive and idle shafts are not parallel with each other	Check the alignment using the methods described in the aligning shafts section of the uni-chains engineering manual. Correct if necessary
-	Conveyor frame and/or components, not level or square	Check and adjust conveyor frame. After doing this it may be necessary to re-adjust the drive and idle shafts
-	Sprockets not aligned correctly with each other	Check that sprocket teeth are aligned with each other across the shaft so that they all engage the belt at the same location. Many sprockets have timing marks that should be placed in alignment all the way across the shaft
-	Locked sprocket on drive and idle shafts are not in line with respect to each other	The locked drive and idle sprockets must be in the same location on the shaft relative to each other. Check for alignment and adjust if necessary
-	Material build-up on underside of belt interfering with proper sprocket engagement with belt	Remove any material build up that could interfere with sprocket tooth engagement. If possible install and in-place cleaning system or other devices to prevent future material build up
-	Sprockets are not engaged properly with the belt	Some sprockets have defined travel directions that must be maintained to drive the belt. Some belts have defined sprocket paths. Consult installation guidelines for more information
-	Return rollers or return wearstrips not level and square to conveyor frame	Inspect and correct any return roller or wearstrips that is not level or square with conveyor frame
-	Sprockets not properly locked	Check for damaged or missing retainer rings; check retainer ring location to make sure locked sprockets on drive and idle shafts are in perfect alignment. Check that all sprockets are not locked, only the center sprocket

Troubleshooting Guidelines

Straight running Belts

Problem	Possible Problems	Solution
4. Excessive sprocket wear	Sprockets exposed to abrasive particles	Eliminate or reduce the exposure of the belt, sprockets or wearstrips to abrasive materials
-	Incorrect catenary sag	Ensure catenary sag on return side of belt is as recommended by uni-chains engineering department or engineering manual. Too much slack can reduce wrap angle or not provide proper back tension on the sprocket
-	Excessive belt speed	Reduce belt speed if possible
-	Drive and idle shafts are not parallel with each other	Check the alignment using the methods described in the aligning shafts section of the uni-chains engineering manual. Correct if necessary
-	Insufficient number of sprockets	Sprocket wear is proportional to tooth contact area. More sprockets provide more tooth contact which will reduce wear. Also using a sprocket with a larger number of teeth will increase contact area
-	Locked sprocket on drive and idle shafts are not in line with respect to each other	The locked drive and idle sprockets must be in the same location on the shaft relative to each other. Check for alignment and adjust if necessary
-	Sprockets not aligned correctly with each other	Check that sprocket teeth are aligned with each other across the shaft so that they all engage the belt at the same location. Many sprockets have timing marks that should be placed in alignment all the way across the shaft
-	Incorrect shaft location relative to belt (“A” dimension)	Compare existing shaft location to the recommended A dimension in the uni-chains belt catalog. Adjust drive shaft as necessary to meet these dimensions
-	Shaft deflection or twisting	Examine shaft for evidence of deflection or twisting. These conditions prevent all the sprockets from pulling evenly on the belt. Bent or twisted shafts should be replaced. An intermediate bearing may be used to address deflection for wide belts. Check the tension calculation to determine if a larger shaft is necessary. Contact uni-chains engineering for assistance

Troubleshooting Guidelines

Straight running Belts

Problem	Possible Problems	Solution
5. Wear or damage on belt edge	Belt edge catching on obstructions on carryway, return, frame or nearby equipment	Examine the conveyor frame and belt sliding surfaces for any catch points and correct any of these conditions
-	Belt not properly aligned or not tracking correctly	Improper alignment or tracking can cause the belt to pull to one side and contact the frame edge or other obstructions. Refer to belt tracking section of this guide for methods to correct this
-	Thermal expansion causing belt edge to contact the conveyor frame	Ensure the frame provides the proper minimum clearance on each side of the belt when full thermal expansion (highest temperature) is reached
-	Conveyor frame and/or components, not level or square	Check and adjust conveyor frame to correct any contact points with the belt. After doing this it may be necessary to re-adjust the drive and idle shafts
-	Drive and idle shafts are not parallel with each other	This can cause the belt to mistrack to one side. Check the alignment using the methods described in the aligning shafts section of the uni-chains engineering manual. Correct if necessary
-	Belt edge not properly supported	If belt edge is cantilevered out over the support it can cause breakage if product is loaded at that point. Also uni-chains belts in many materials are buoyant in many liquids and it may be necessary to guide the belt in these cases to prevent edge wear. Contact uni-chains engineering for assistance

Troubleshooting Guidelines

Straight running Belts

Problem	Possible Problems	Solution
6. Sprockets move laterally to center or edge of belt	Drive and idle shafts are not parallel with each other	This can create a side force in the belt against the sprockets. Check the alignment using the methods described in the Aligning Shafts section of the engineering manual. Correct uni-chains if necessary
-	Sprockets not properly locked	Check for damaged or missing retainer rings; check retainer ring location to make sure locked sprockets on drive and idle shafts are in perfect alignment. Check that all sprockets are not locked, only the center sprocket
-	Locked sprocket on drive and idle shafts are not in line with respect to each other	The locked drive and idle sprockets must be in the same location on the shaft relative to each other. Check for alignment and adjust if necessary
-	Sprockets not aligned correctly with each other	Check that sprocket teeth are aligned with each other across the shaft so that they all engage the belt at the same location. Many sprockets have timing marks that should be placed in alignment all the way across the shaft
-	Material build-up on underside of belt interfering with proper sprocket engagement with belt	Remove any material build up that could interfere with sprocket tooth engagement. If possible install and in-place cleaning system or other devices to prevent future material build up
-	Sprockets are not engaged properly with the belt	Some sprockets have defined travel directions that must be maintained to drive the belt. Some belts have defined sprocket paths. Consult installation guidelines for more information
-	Shaft deflection or twisting	Examine shaft for evidence of deflection or twisting. These conditions prevent all the sprockets from pulling evenly on the belt. Bent or twisted shafts should be replaced. An intermediate bearing may be used to address deflection for wide belts. Check the tension calculation to determine if a larger shaft is necessary. Contact uni-chains engineering for assistance

Troubleshooting Guidelines

Straight running Belts

Problem	Possible Problems	Solution
7. Hinge pin migrating out of belt	Locking system not secure	Refer to assembly instructions for details on the various locking systems and how to properly apply them
-	Belt edge is contacting side frame or other obstruction	This can cause a repeated hammering force on the pin from the side of the belt making contact. Find this area(s) and eliminate the contact
-	Drive and idle shafts are not parallel with each other	This can cause the belt to mistrack to one side and apply a side force to the pins. Check the alignment using the methods described in the Aligning Shafts section of the uni-chains engineering manual. Correct if necessary
8. Side guard wear, damage, or breakage	Side guards contacting conveyor frame, return or nearby equipment	Eliminate any obstructions to sideguard travel. Examine the conveyor frame for possible contact points
-	Incorrect or uneven product loading	Add support under loading area of belt. Correct any belt loading method that may cause damage to sideguards. Take measures so the conveyed material is moving at a similar speed and direction to the belt when it is loaded
9. Product support wear, damage, or breakage	Product supports contacting obstructions on conveyor frame, return or nearby equipment	Eliminate obstructions to the product support travel. Examine the conveyor frame for any possible contact points and correct any conditions restricting the travel of the product support
-	Incorrect or uneven product loading	Adjust belt loading as necessary to protect product supports. Take measures so the conveyed material is moving at a similar speed and direction to the belt when it is loaded
-	Large impact at the infeed area	Reduce impact directly on belt by adding an “impact plate” above belt to absorb initial shock. Mount this plate at an angle that will direct impacting product onto the belt
-	Improper return support for product supports	Belts with product supports should be supported on each side of belt, usually on the indent and also as needed across the belt width. Refer to return section of this manual or contact uni-chains engineering for assistance

Troubleshooting Guidelines

Straight running Belts

Problem	Possible Problems	Solution
10. Impact damage to belt	Incorrect or uneven product loading	Adjust belt loading as necessary to protect product supports. Take measures so the conveyed material is moving at a similar speed and direction to the belt when it is loaded
-	Unsuitable belt material	Some materials have better impact properties than others. Refer to the materials section of the uni-chains engineering manual or contact uni-chains engineering for assistance
-	Environmental factors	Environmental factors can adversely affect impact resistance of a plastic belt. Chemicals make plastic more brittle and plastic becomes less impact resistant at low temperatures. Look to reduce or eliminate these conditions or contact uni-chains engineering for belt/material alternatives
11. Finger plate damage	Improper mounting of finger plates	Refer to Design Guidelines in the uni-chains engineering manual for correct mounting criteria. Finger plates must be free to move laterally with the belt as it expands and contracts. It is important the angle used to mount the finger plates is straight, level, and not twisted or bent
-	Excessive heat at finger plate area	If belts in a high heat area are expanding beyond the movement range of the finger plate's slotted mounting holes, contact uni-chains engineering for assistance
-	Raised Rib belt not tracking correctly	Correct belt tracking problem as explained in #3
-	Material build up between raised ribs	Clean the existing debris from belt and eliminate the source of build up if possible. Routinely examine and clean belt as a preventative measure
-	Incorrect shaft location relative to belt ("A" dimension)	Compare existing shaft location to the recommended A dimension in the uni-chains belt catalog. Adjust drive shaft as necessary to meet these dimensions
-	Shaft deflection or twisting	Examine shaft for evidence of deflection or twisting. Bent or twisted shafts should be replaced. An intermediate bearing may be used to address deflection for wide belts. Check the tension calculation to determine if a larger shaft is necessary. Contact uni-chains engineering for assistance
-	Sprockets not aligned correctly with each other	Check that sprocket teeth are aligned with each other across the shaft so that they all engage the belt at the same location. Many sprockets have timing marks that should be placed in alignment all the way across the shaft

Troubleshooting Guidelines

Straight running Belts

Problem	Possible Problems	Solution
12. Belt develops excessive catenary sag	Incorrect total belt length	Excess catenary sag must occur at the belt's coldest operating temperature because this is when the belt will be contracted to its shortest length. If excess catenary is found, shorten the belt by removing rows of modules
-	Insufficient belt take-up in high heat applications	If the catenary sag is due to extra length from the thermal expansion from operational temperatures and is not excessive when cold, it may be necessary to add a take-up device on the conveyor to compensate for the thermal growth. Contact uni-chains engineering for assistance
-	Elongation of belt due to initial start-up situation or heavy loads	Plastic belt will elongate during initial use. This is a normal process that is a function of the belt modules and pins seating themselves with each other and is more noticeable when heavy loads are present. In this case, allow belt to adjust to operating conditions and shorten when necessary by removing rows of modules *CAUTION: Monitor belt during initial use to avoid binding or catching*
-	-	-
-	-	-
-	-	-
-	-	-
-	-	-

Troubleshooting Guidelines

Sideflexing Belts

Problem	Possible Problems	Solution
1. Belt is jumping off the sprockets or not engaging properly	Incorrect catenary sag	Ensure catenary sag on return side of belt is as recommended by uni-chains engineering department or engineering manual. Too much slack can reduce wrap angle or not provide proper back tension on the sprocket
-	Belt length changes not accommodated	Belt length can increase with temperature, load, and wear. This excess belt will accumulate right after the drive sprockets where the tension is lowest. Too much catenary sag reduces the wrap on the sprocket or can cause the belt to bounce up off the sprockets. A snub roller can help isolate this from the drive sprockets. Sometimes a take-up system, prior to the first turn, may be required
-	Straight section from curve to drive shaft does not meet minimum requirements	If this straight section is too short, the belt pull will not be evenly distributed across the belt width. This causes two main problems: 1) the belt will have a slightly different pitch and phase from one side to the other, and 2) the belt will tend to migrate to the outside of the last curve, placing a significant side load on the sprockets. Refer to the uni-chains belt catalog and engineering manual for these minimum requirements for each sideflexing belt series
-	Belt edge not properly supported leading to the drive sprockets	Coming out of a curve a belt will have a natural tendency to "walk" to the outside edge, even if minimum requirements are met. To prevent the sprockets from having to resist this side force, an edge guide should be installed on the outside edge of the belt leading to the drive shaft. This guide should not force the belt to the inside; rather, it should keep the belt perpendicular to the last curve
-	Return and carryway sections not parallel with each other	This creates a situation where the sprocket rotation is not in line with the belt travel, which will cause side loads on the sprockets. This can cause the sides of the sprocket teeth to wear or the belt to disengage with the sprockets
-	Drive shaft is not perpendicular to curve outlet	This creates the same condition as when the drive and tail shaft are not parallel on straight belts. If the drive does not pull the belt straight out of the curve, the load is not evenly distributed on the sprockets. Check shaft alignment with the curve and adjust if necessary

Troubleshooting Guidelines

Sideflexing Belts

Problem	Possible Problems	Solution
2. Excessive wear on the guide rail wearstrip, especially in turns	Wearstrip material's PV value is exceeded	In sideflexing belts there is a great inward radial load in the curve, especially at the transitions between straight and curve sections. At the point of contact between belt and wearstrip heat will occur due to friction. The combination of this pressure and the velocity (PV Limit) of the conveyor may be too much for the particular wearstrip material. A PV overload is often characterized by a sharp temperature rise in these sections of the conveyor. A wearstrip material with a higher PV may be used, but care should be taken because at some point the wearstrip will stop wearing and the belt edge will start to wear. We advise replacement of wearstrip rather than belt
-	Not enough guide clearance for belt through the section in question	If the edge guides force the belt to bind through a section, additional compressive forces are applied to the wearstrip (as well as additional tensile forces in the belt). Before the installation of a belt, take a 2-3 in. long section of belt and manually pull it through all sections and wearstrip to insure proper guide clearance
-	Edge guide wearstrips through the turn not smooth, even or continuous	An edge guide that is not smooth can create high radial forces, causing higher loads on the wearstrip and the belt. This condition is often characterized by higher temperatures on this wearstrip than in other sections. Ensure that all guide rails form a smooth, continuous arc for any curve
3. Excessive sprocket wear	Belt edge not properly supported leading to the drive sprockets	Coming out of a curve, a belt will have a natural tendency to "walk" to the outside edge, even if minimum requirements are met. To prevent the sprockets from having to resist this side force, an edge guide should be installed on the outside edge of the belt leading to the drive shaft. This guide should not force the belt to the inside; rather, it should keep the belt perpendicular to the last curve
-	Return and carryway sections not parallel with each other	This creates a situation where the sprocket rotation is not in line with the belt travel, which will cause side loads on the sprockets. This can cause the sides of the sprocket teeth to wear or the belt to disengage with the sprockets
-	Drive shaft is not perpendicular to curve outlet	This creates the same condition as when the drive and tail shaft are not parallel on straight belts. If the drive does not pull the belt straight out of the curve, the load is not evenly distributed on the sprockets. Check shaft alignment with the curve and adjust if necessary

Troubleshooting Guidelines

Sideflexing Belts

Problem	Possible Problems	Solution
4. Excessive belt edge wear or breakage	There is a catch point on the supports or hold down wearstrip that is snagging an edge	The support wearstrip must be in contact with the belt, but it should be free from catch points or sharp leading edges. If an outer hold down wearstrip is used, care should be taken that it does not catch the belt which can cause edge damage. The outer hold down must be placed so that there is running clearance between it and the belt at the maximum operating temperature of the belt
-	Improper guide rail wearstrip material	If extreme wear is not apparent on the wearstrip, it may have too high of a PV limit in relation to the belt. If the wearstrip is made from an high PV material such as Nylatron, a UHMW (plain or lubricated) may need to be used. It is preferable to replace wearstrip, rather than belts
5. Hinge pin migrating out of belt	Locking system not secured	Refer to assembly instructions for details on the various locking systems and how to properly apply them
-	The belt edge damaged from a catch point or wear	Examine the belt edge for damage that is affecting the locking system. If it is from a catch point, replace the damaged modules and examine the frame for cause of the snag
-	-	-
-	-	-
-	-	-
-	-	-

Conveyors with Turn discs

A turn disc assembly is a disc mounted on a steel shaft with bearings that allow the disc to turn freely. This free spinning disc replaces the inside sliding bearing surface of a curve to reduce the tension on the belt or chain. This is often used to make multiple curves with one single drive station or to pull more load around a curve. Turn discs can be used with both belts and chains. However they are most commonly used with chains because of the typically smaller radius and the fact that the radius does not change with the chain width as it does with a belt. uni-chains offers a range of turn discs for use with certain slat top chains and, although turn discs for belts are not offered, uni-chains' engineering can assist you in designing a turn disc for a sideflexing belt.

Turn discs can be supplied as a single disc (just for the carryway) figure 7-3 or as a double disc figure 7-2 (for both carryway and return). They can be supplied as a single or double disc complete with the UHMW curve tracks figure 7-4 and figure 7-5 or they can be supplied without the tracks figure 7-2 and figure 7-3. The disc material is black glass reinforced nylon and the shaft material is 304SS.

Figure 7-1

Turn Disc Assemblies without Tracks

Do/Si	Chain Type	Item No.	Dimensions (mm)		
			F	H	O
Do	880T-R	94600	80	209	80
Do	880T-RT	94601	84	209	76
Do	1700	94603	60	209	100
Do	1701T	94602	76	209	100
Si	880T-R	94500	-	131.5	85
Si	880T-RT	94501	-	131.5	85
Si	1700	94503	-	131.5	85
Si	1701T	94502	-	131.5	85

Note: Do = Double disc; Si = Single disc

Double Turn Disc Assemblies without Tracks

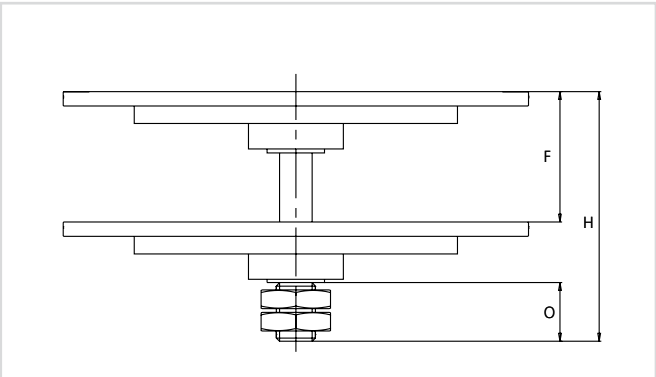

Figure 7-2

Single Turn Disc Assemblies without Tracks

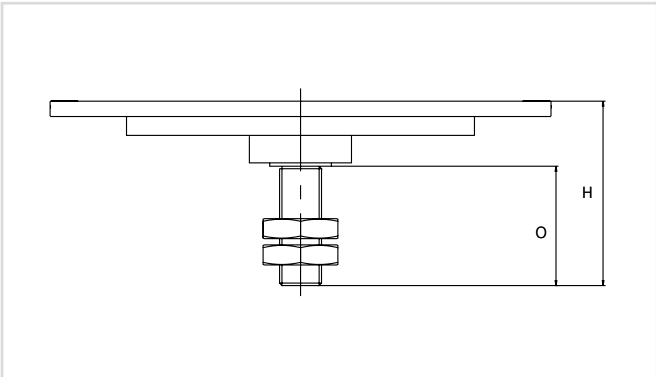

Figure 7-3

Conveyors with Turn Discs

Turn Disc Assemblies complete with Curve Tracks

Do/Si	Chain Type	Track type	Curve Angle	Item No.	Dimensions (mm)						
					O	E	H	C	T	W	Lead in/out
Do	880T-K325R	Curve	90°	94800	80	90	209.0	200	25	475	225
Do	880T-K325R	Curve	180°	94801	80	90	209.0	200	25	500	225
Do	880T-K450R	Curve	90°	94810	80	90	209.0	200	25	487.5	225
Do	880T-K450R	Curve	180°	94811	80	90	209.0	200	25	525	225
Do	880T-K325RT	Curve	90°	94802	76	90	209.0	200	25	487.5	225
Do	880T-K325RT	Curve	180°	94803	76	90	209.0	200	25	525	225
Do	880T-K450RT	Curve	90°	94812	76	90	209.0	200	25	487.5	225
Do	880T-K450RT	Curve	180°	94813	76	90	209.0	200	25	525	225
Do	1700	Curve	90°	94806	100	90	209.0	150	30	400	200
Do	1700	Curve	180°	94807	100	90	209.0	150	30	400	200
Do	1701T	Curve	90°	94804	74	90	209.0	150	30	400	200
Do	1701T	Curve	180°	94805	74	90	209.0	150	30	400	200
Si	880T-K325R	Curve	90°	94700	85	-	131.5	200	25	475	225
Si	880T-K325R	Curve	180°	94701	85	-	131.5	200	25	500	225
Si	880T-K450R	Curve	90°	94710	85	-	131.5	200	25	487.5	225
Si	880T-K450R	Curve	180°	94711	85	-	131.5	200	25	525	225
Si	880T-K325RT	Curve	90°	94702	85	-	131.5	200	25	475	225
Si	880T-K325RT	Curve	180°	94703	85	-	131.5	200	25	500	225
Si	880T-K450RT	Curve	90°	94708	85	-	131.5	200	25	487.5	225
Si	880T-K450RT	Curve	180°	94709	85	-	131.5	200	25	525	225
Si	1700	Curve	90°	94706	85	-	131.5	150	30	400	200
Si	1700	Curve	180°	94707	85	-	131.5	150	30	400	200
Si	1701T	Curve	90°	94704	85	-	131.5	150	30	400	200
Si	1701T	Curve	180°	94705	85	-	131.5	150	30	400	200

Note: Do = Double disc; Si = Single disc

Double Turn Disc Assemblies complete with Curve Tracks

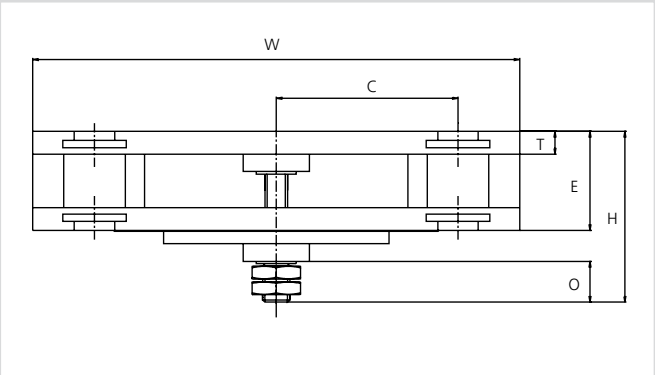

Figure 7-4

Single Turn Disc Assemblies complete with Curve Tracks

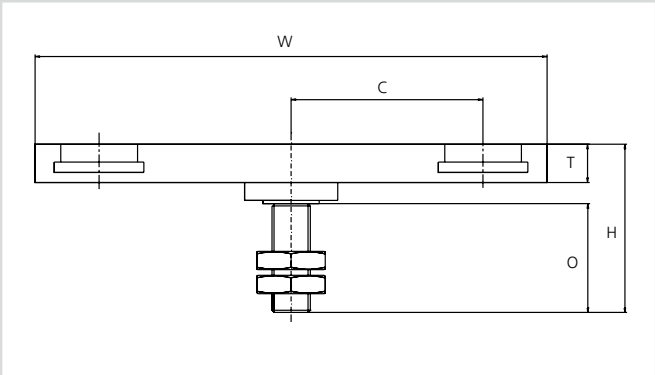

Figure 7-5

Conversion of Units (metric/imperial)

Imperial	Multiply	Metric	Multiply	Imperial
		Length		
inch (in.)	25.4	millimeter (mm)	0.03937	inch (in.)
inch (in.)	0.0254	meter (m)	39.37	inch (in.)
foot (ft.)	304.8	millimeter (mm)	0.0033	foot (ft.)
foot (ft.)	0.3048	meter (m)	3.281	foot (ft.)
		Area		
square inch	645.2	square millimeter	0.00155	square inch
square inch	0.000645	square meter	1550	square inch
square foot	92,903	square millimeter	0.00001	square foot
square foot	0.0929	square meter	10.764	square foot
		Volume		
cubic foot	0.0283	cubic meter	35.31	cubic foot
cubic foot	28.32	liter	0.0353	cubic foot
		Velocity and Speed		
foot/second	18.29	meter/min	0.0547	foot/second
foot/minute	0.3048	meter/min	3.281	foot/second
		Mass and Density		
pound	0.4536	kilogram	2.205	pound
pound/cubic foot	16.02	kilogram/cubic meter	0.0624	pound/cubic foot
		Force		
pound-force	0.4536	kilogram-force	2.205	pound-force
pound-force	4.448	newton	0.225	pound-force
kilogram-force	9.807	newton	0.102	kilogram-force
		Work (Force/Length)		
pound/foot	1.488	kilogram/meter	0.672	pound/foot
pound/foot	14.59	newton/meter	0.0685	pound/foot
kilogram/meter	9.807	newton/meter	0.102	kilogram/meter
		Torque		
inch-pound	11.52	kilogram-millimeter	0.0868	inch-pound
inch-pound	0.113	newton-meter	8.85	inch-pound
kilogram-millimeter	9.81	newton/millimeter	0.102	kilogram-millimeter
		Moment of Inertia		
$inch^4$	416,231	$millimeter^4$	0.0000024	$inch^4$
$inch^4$	41.62	$centimeter^4$	0.024	$inch^4$
		Pressure		
pound/square inch	0.0007	kilogram/square millimeter	1422	pound/square inch
pound/square inch	0.0703	kilogram/square millimeter	14.22	pound/square inch
pound/square inch	0.00689	newton/millimeter	145	pound/square inch
pound/square inch	0.689	newton/millimeter	1.45	pound/square inch
		Stress		
pound/square foot	4.882	kilogram/square meter	0.205	pound/square foot
pound/square foot	47.88	newton/square meter	0.0209	pound/square foot
		Power		
horsepower	745.7	watt	0.00134	horsepower
foot-pound/minute	0.0226	watt	44.25	foot-pound/minute

Calculation Factors

Values provided in the tables below are dynamic friction under clean conditions. Values will be 0.1 to 0.2 higher at the starting moment. If possible it is recommended to start the conveyor unloaded and gradually apply load.

Friction Coefficient (μ_1) between Chain/Belt and Wearstrip

Chain/Belt Material	Wearstrip Material					
	UHMWPE Dry	UHMWPE Wet	UHMWPE with Oil	Nylatron NSM Dry	SS-Steel Dry	SS-Steel Wet
POM-NL	0.20	0.15	0.12	0.22	0.25	0.21
POM-D	0.19	0.14	0.12	0.21	0.24	0.20
POM-LF	0.18	0.13	0.12	0.20	0.23	0.19
POM-SLF	0.17	0.12	0.12	0.19	0.22	0.18
POM-SX	0.15	0.10	0.11	0.17	0.20	0.16
PP	0.25	0.20	0.15	0.28	0.30	0.27
PE	0.25	0.20	0.15	0.28	0.25	0.20
PA6	0.20	N/a	0.15	0.22	0.30	n/a
GR	0.26	0.22	0.18	0.29	0.32	0.25
AR	0.26	0.22	0.18	0.29	0.32	0.25

Friction Coefficient, (μ_2) between Chain/Belt and Product

Chain Material	Lubrication	Product Material			
		Glass	Metal	Plastic	Cardboard
Carbon*/ Stainless Steel	Water Water + soap Oil	0.25 0.15 0.15	0.25 0.15 0.15	0.20 0.10 0.10	- - -
POM-D (Acetal)	Dry Water	(0.18) (0.16)	0.24 0.21	0.22 0.19	0.27 -
POM-LF (Acetal)	Dry Water	(0.15) (0.12)	0.20 0.18	0.18 0.16	0.21 -
POM-SLF (Acetal)	Dry Water	(0.12) (0.10)	0.15 0.14	0.15 0.14	0.19 -
AR/GR	Dry Water	(0.27) (0.25)	0.32 0.30	0.26 0.25	0.31 -
PP	Dry Water	(0.19) (0.17)	0.32 0.30	0.17 0.15	0.22 -
PE	Dry Water	(0.10) (0.09)	0.13 0.11	0.10 0.09	0.15 -

Note: Carbon chains can not run with water.
( ): Do not use plastic chains if broken glass comes on the conveyor.
For uni PRR chains, use μ_1.

Calculation Factors

Service Factors (SF)

Conveyor Condition/ Start-Stop per hour	Straight Conveyor	Incline/Decline Conveyor	Curve Conveyor
Clean | 0-4/hour	1.0	1.2	1.4
Clean | 5 or more/hour	1.2	1.3	1.5
Averagae | 0-4/hour	1.2	1.4	1.5
Averagae | 5 or more/hour	1.4	1.5	1.6
Dirty | 0-4/hour	1.4	1.6	1.8
Dirty | 5 or more/hour	1.5	1.7	1.9

Speed Factors (C_S)

0-20 m/min	1.00
at 30 m/min	0.85
at 45 m/min	0.75
at 60 m/min	0.70
above 120 m/min	0.65

Note: Speed factor can be used for all belts and chains. For sideflexing belts, please check load/speed relations first and only use speed factor if the load/speed relation for your particular belt/weartrip combination is not listed.

Temperature Factors (C_T)

	POM	PP	PE	PA6.6	PA6.6-GFH
at -79 °C	n/a	n/a	1.35	n/a	n/a
at -40 °C	1.05	n/a	1.30	1.10	1.00
1 °C	1.05	1.00	1.10	1.05	1.00
20 °C	1.00	1.00	1.00	1.00	1.00
40 °C	0.95	0.85	0.50	0.90	1.00
60 °C	0.90	0.60	0.40	0.55	
80 °C	0.60	0.40	0.25	0.30	
90 °C	0.40	0.35	n/a	0.25	
100 °C	n/a	0.25	n/a	0.20	
120 °C	n/a	n/a	n/a	0.17	
140 °C	n/a	n/a	n/a	0.16	
160 °C	n/a	n/a	n/a	n/a	
180 °C	n/a	n/a	n/a	n/a	

Calculation Factors

Curve Factor (K)/Inclination Factor (K_{inc})

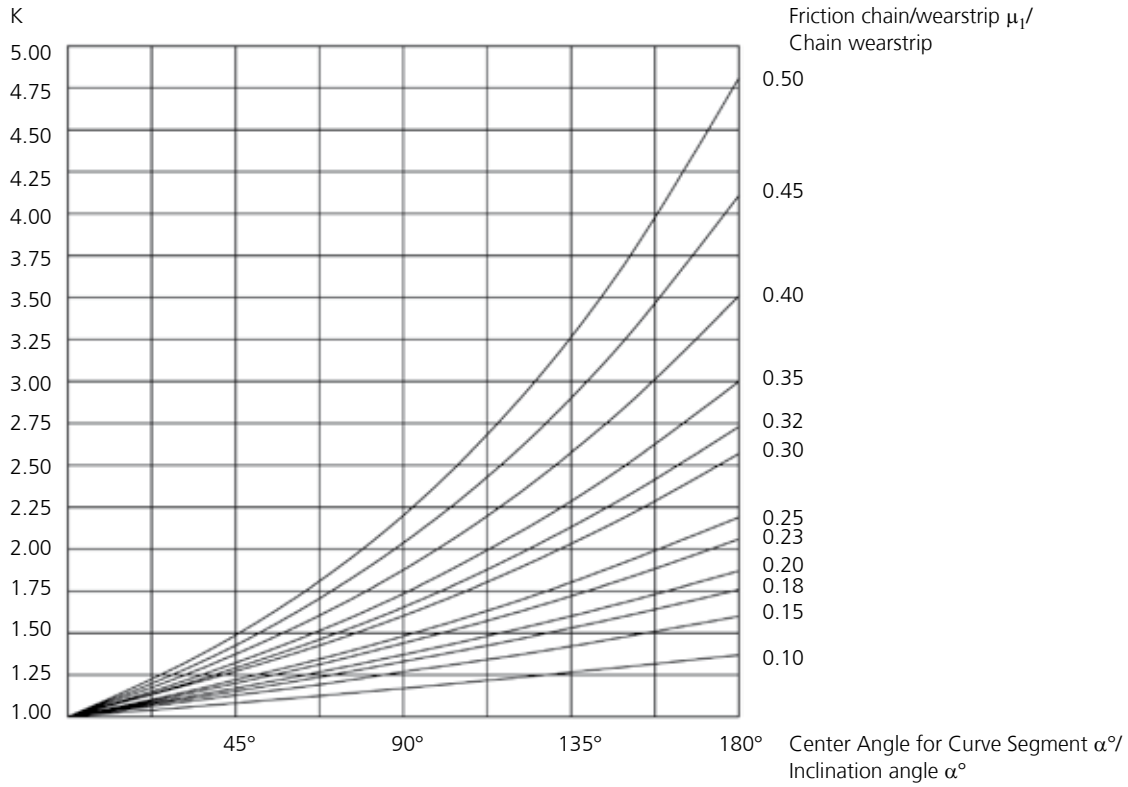

Figure 7-6

The curve factor/inclination factor can also be calculated using the following formula:

$$K = e^{\left(\frac{\mu_1 \times \alpha \times \pi}{180}\right)} \approx 2.72^{\left(\frac{\mu_1 \times \alpha \times \pi}{180}\right)}$$

α = Curve/incline angle in degrees

μ_1 = Friction coefficient, belt/chain wearstrip

e = Mathematical constant, e ≈ 2.72

Load/Speed Relations

Load/Speed Relations for uni Flex SNB with Nylatron Wearstrips

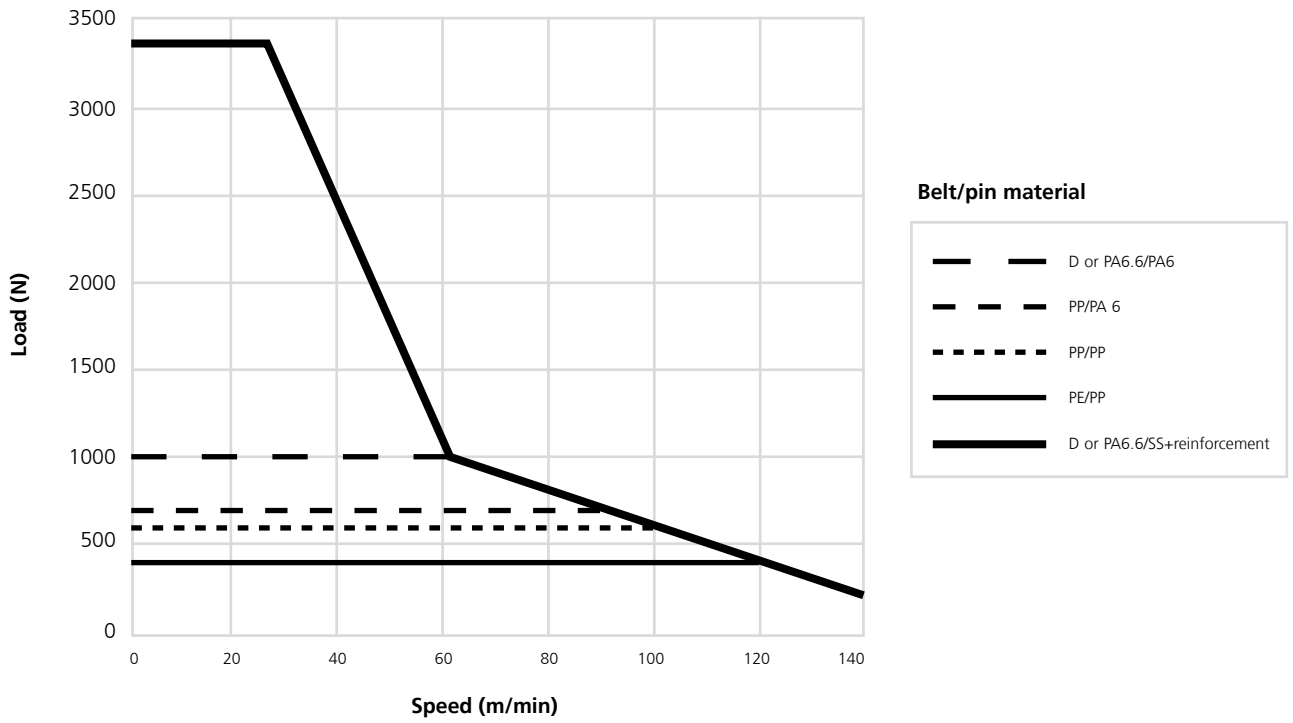

Figure 7-7

Load/Speed Relations for uni Flex SNB with HD 1000 Wearstrips

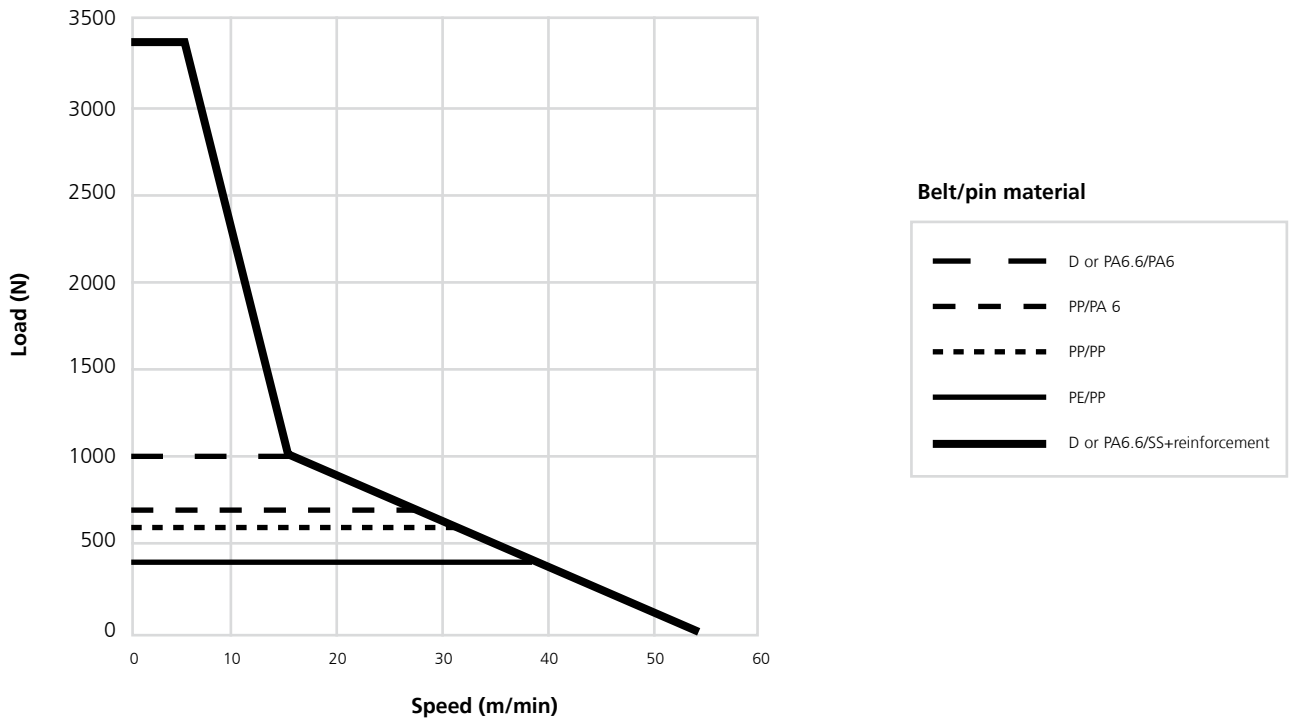

Figure 7-8

Load/Speed Relations

uni Flex ONE K750 (Permissible Curve Load)

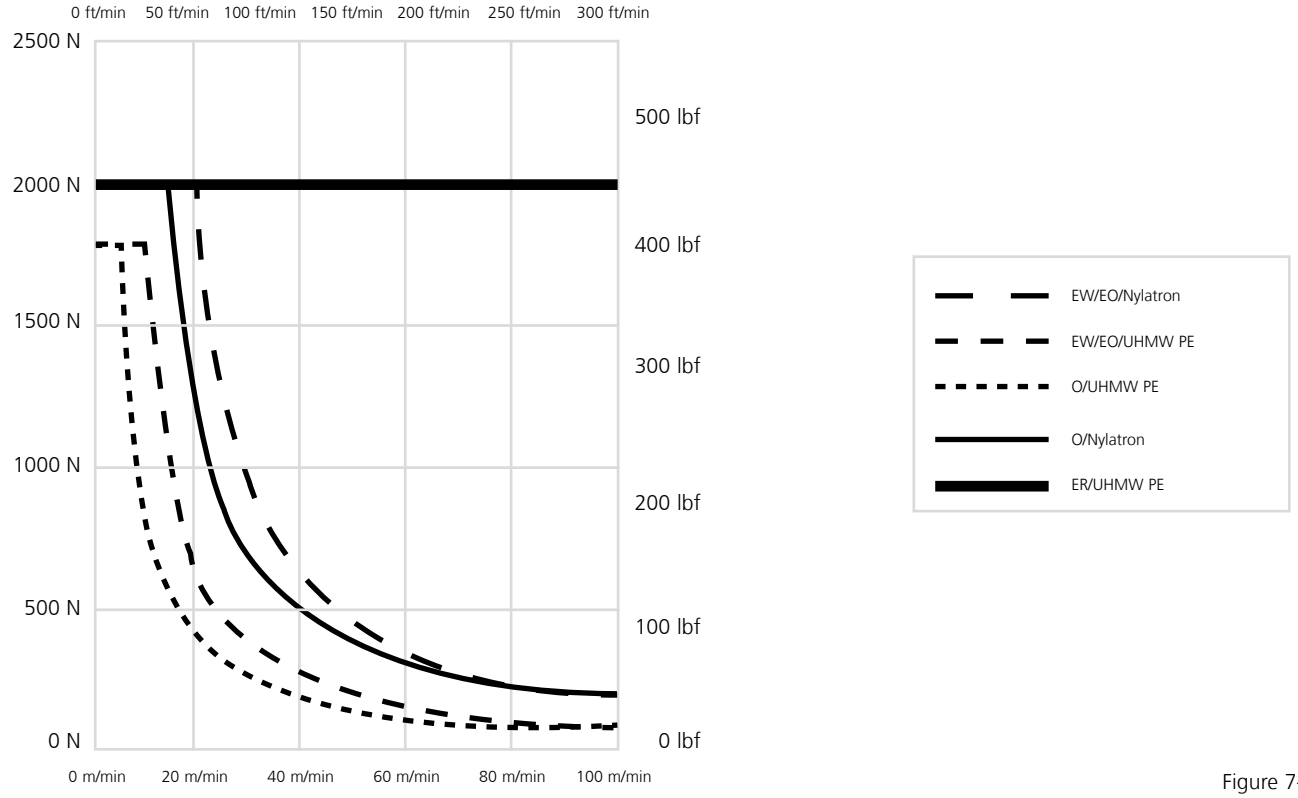

Figure 7-9

uni Flex ONE K1200 (Permissible Curve Load)

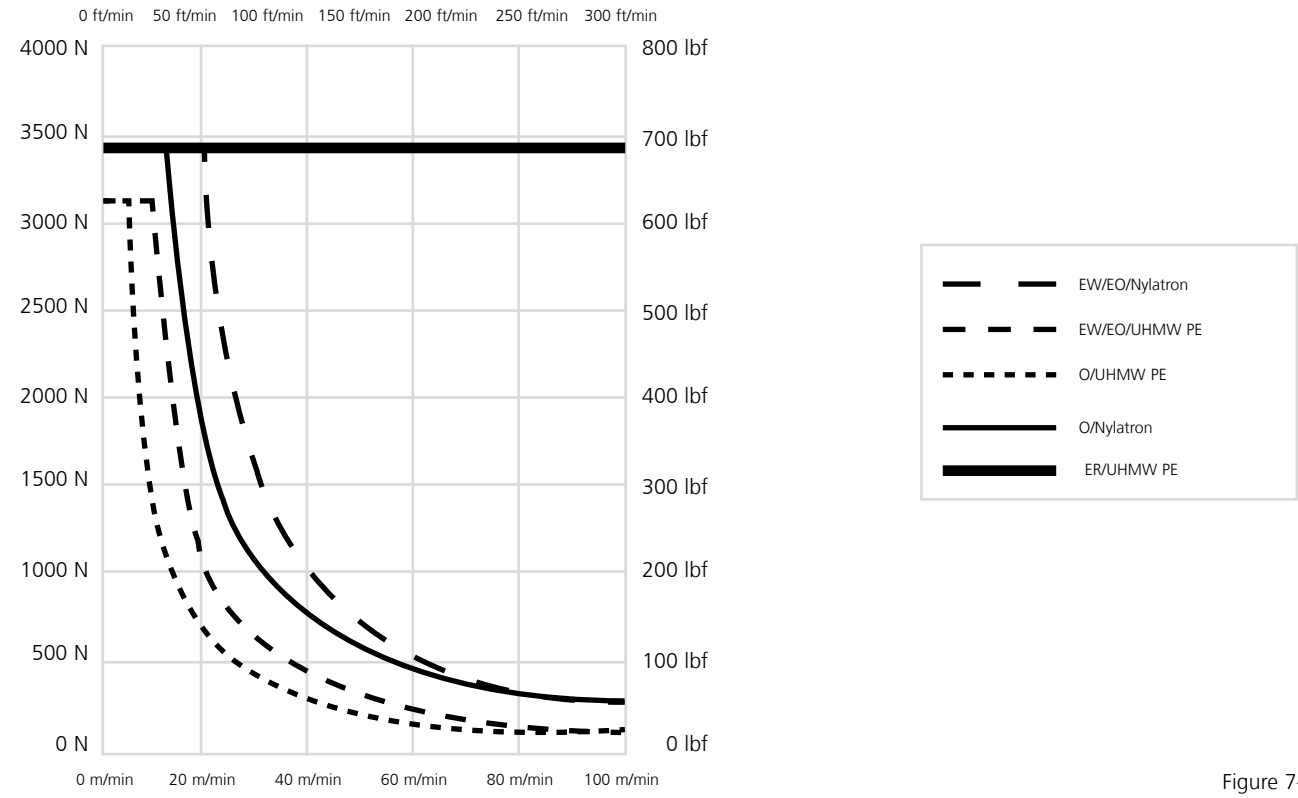

Figure 7-10

Load/Speed Relations

uni Flex ONE K1500 (Permissible Curve Load)

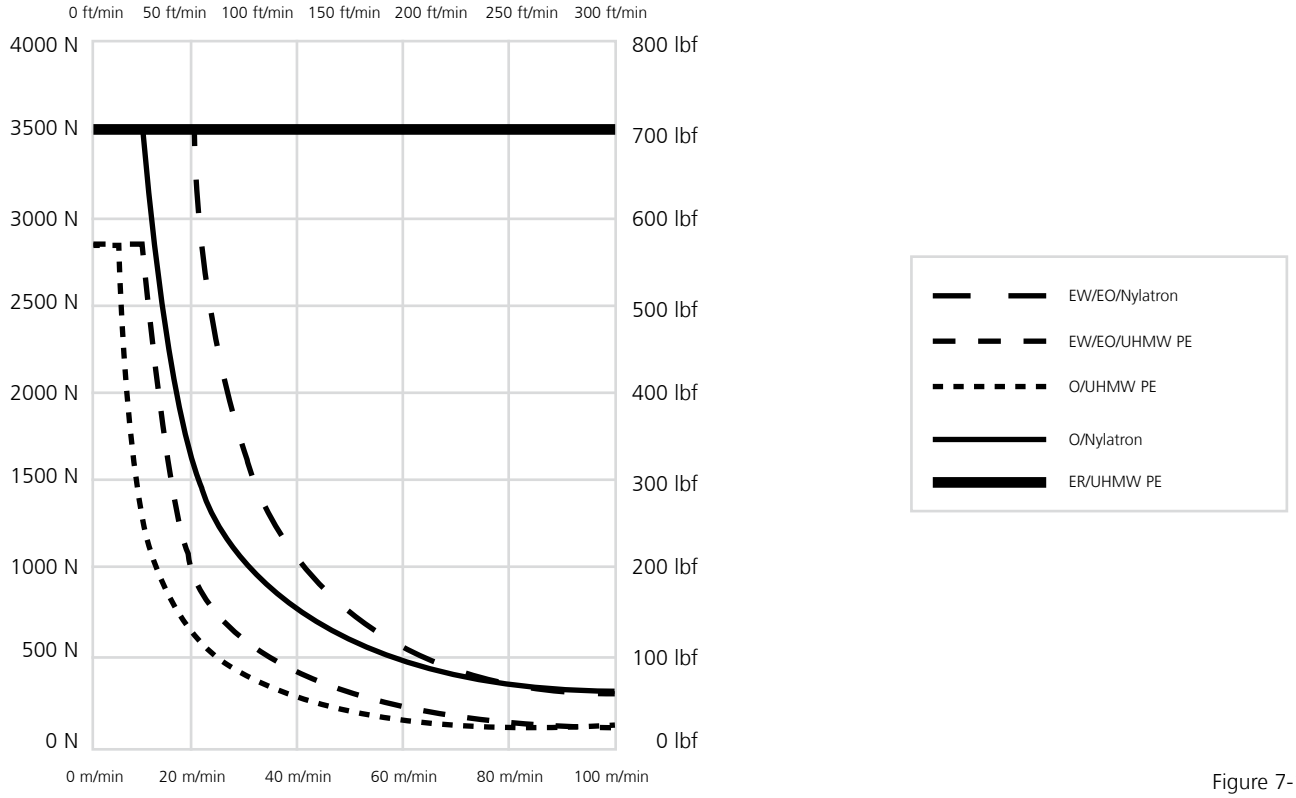

Figure 7-11

uni Flex ONE K2400 (Permissible Curve Load)

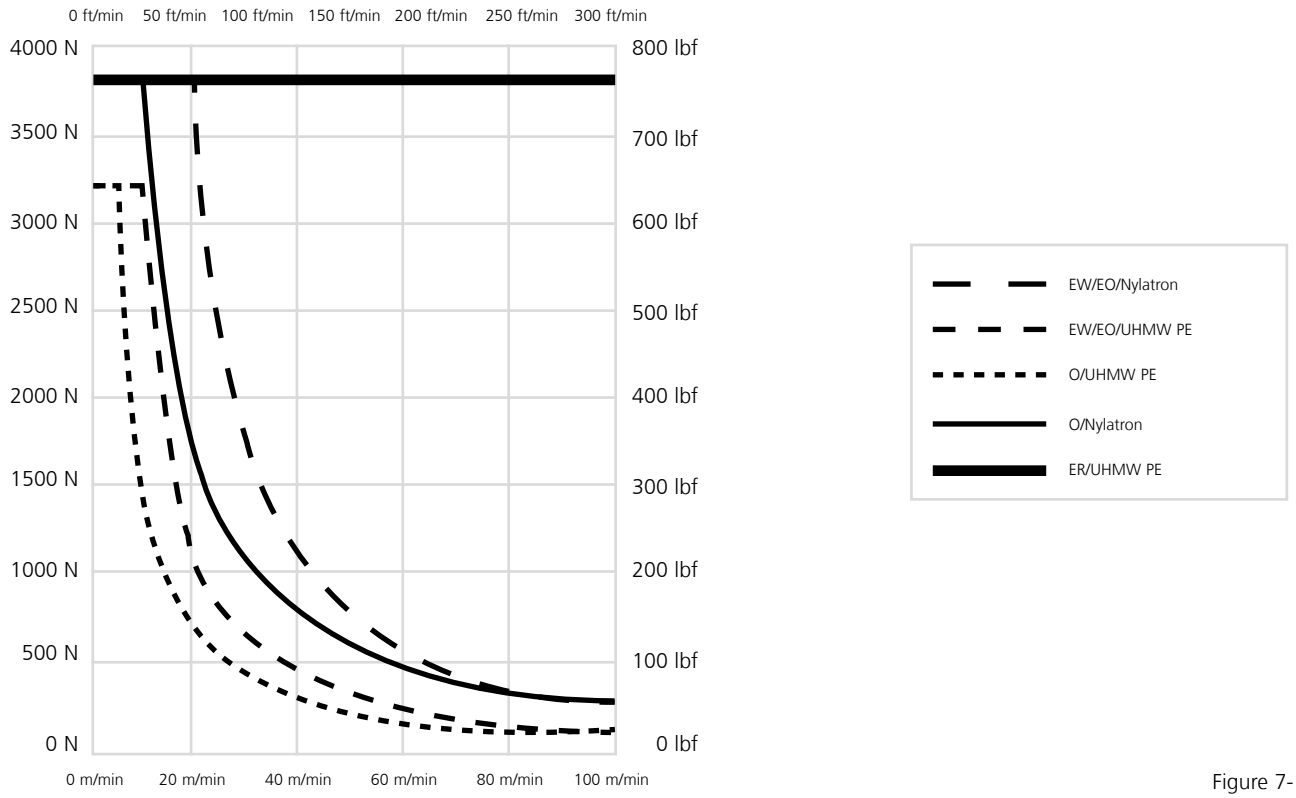

Figure 7-12

Temperature Factors

Temperature Factor - Acetal (POM)

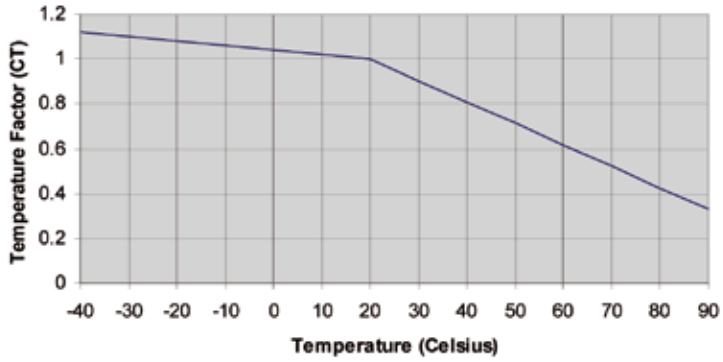

Figure 7-13

Temperature Factor - PP (Polypropylene)

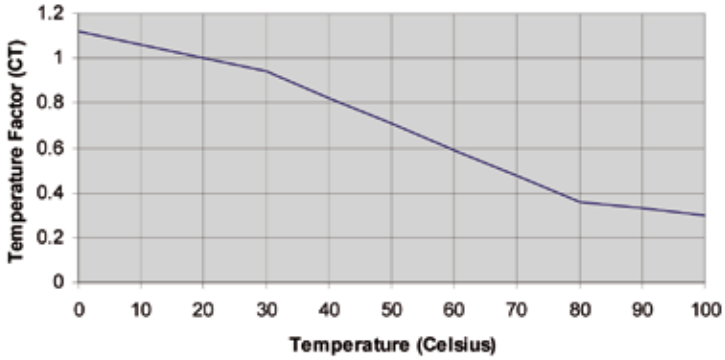

Figure 7-14

Temperature Factor - PE (Polyethylene)

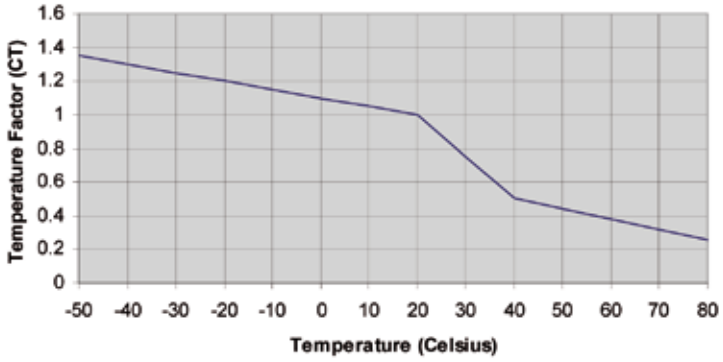

Figure 7-15

Temperature Factor - PA6.6 (Polyamide)

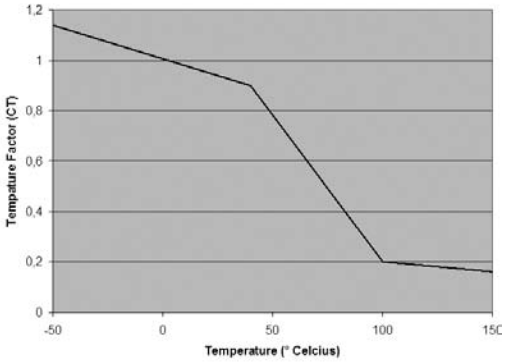

Figure 7-16

Belt Elasticity

The elasticity index values on the table below show a comparison of the relative elasticity of the various belt and pin combinations both dry and wet. The value of 1 is assigned to the uni-chains belt series/material/pin combination that has the most stiffness. All other values are related to this value for a means of comparison.

Series	Opening	Material	Pin Material	Elasticity Index (dry)	Elasticity Index (wet)
uni M-QNB	Closed	POM-EC	PA6.6	0.30	0.30
uni M-QNB	Closed	PE	PA6.6	0.15	0.15
uni M-QNB	Closed	PP	PA6.6	0.17	0.18
uni M-QNB	Vacuum	PP	PA6.6	0.17	0.17
uni M-QNB	Closed	POM-SLF	PA6.6	0.31	0.31
uni QNB	Closed	PP	PA6.6	0.25	0.24
uni QNB	Closed	PP	PA6.6	0.25	0.24
uni QNB	Closed	POM-SLF	PA6.6	0.43	0.41
uni QNB	Closed	POM-SLF	PA6.6	0.43	0.41
uni SSB	Closed	POM-LF	GR	0.29	
uni SSB	Closed	PP	GR	0.17	
uni SSB	29%	POM-LF	GR	0.28	
uni SSB	29%	PP	GR	0.16	
uni SSB	32%	POM-LF	GR	0.26	
uni SSB	32%	PP	GR	0.15	
uni MPB	PRR-16%	POM-DI	PP	0.19	
uni MPB	Closed	POM-DI	PP	0.27	
uni MPB	18%	POM-DI	PP	0.23	
uni MPB	RO22%	POM-DI	PA6.6	0.14	0.12
uni MPB	G	POM-DI	PP	0.29	
uni MPB	Closed	PE-I	PP	0.11	
uni MPB	18%	PE-I	PP	0.07	
uni MPB	20%	PE-I	PP	0.08	
uni MPB	22%	PE-I	PP	0.08	
uni MPB	N	PE-I	PP	0.10	
uni MPB	Closed	PP	PP	0.21	
uni MPB	18%	PP	PP	0.13	
uni MPB	20%	PP	PP	0.13	
uni MPB	22%	PP	PP	0.16	
uni CNB	Closed	POM-D	PA6.6	0.19	0.17
uni CNB	22%	POM-D	PA6.6	0.12	0.11
uni CNB	Closed	PE	PA6.6	0.08	0.08
uni CNB	22%	PE	PA6.6	0.05	0.05
uni CNB	Closed	PP	PA6.6	0.11	0.11
uni CNB	18%	PP	PA6.6	0.07	0.07
uni CNB	22%	PP	PA6.6	0.07	0.07

Belt Elasticity

Series	Opening	Material	Pin Material	Elasticity Index (dry)	Elasticity Index (wet)
uni L-SNB	36%	POM-LF	PP	0.36	
uni L-SNB	36%	PP	PP	0.19	
uni L-SNB	Rib36%	PP	PP	0.23	
uni M-SNB	M3	POM-D	PA6.6	0.30	0.34
uni M-SNB M3	POM-LF	PA6.6	0.31	0.35	
uni M-SNB M3	PE	PA6.6	0.14	0.16	
uni OPB 4V	36%	PP	PP	0.19	
uni OPB 4V	23% Rib	PP	PP	0.23	
uni OPB 4V	Closed	PP-HW	PP	0.26	
uni OPB 4V	23%	PP-HW	PP	0.21	
uni OPB 4V	23% Fine	PP-HW	PP	0.24	
uni Light EP	22% Fine	PP-HW	PP	0.19	
uni Light	Closed	POM-LF	PA6.6	0.40	
uni Light	10%	POM-LF	PA6.6	0.38	0.33
uni Light	22%	POM-LF	PA6.6	0.36	0.30
uni Light	Closed	PA6	GR	0.25	0.00
uni Light	Closed	PP	PA6.6	0.30	0.26
uni Light	Closed	PP	PA6.6	0.24	0.23
uni Light	Closed	PP	PA6.6	0.25	0.24
uni Light	22%	PP	PA6.6	0.23	0.20
uni XLB	Closed	POM-NL	PA6.6	1.00	
uni XLB	Closed	POM-NLAS	PA6.6	0.96	
uni XLB	15%	POM-NLAS	PA6.6	0.95	
uni CPB	Closed	POM-NL	PA6.6	0.55	
uni CPB	20%	POM-NL	PA6.6	0.59	
uni CPB	Closed	POM-NLAS	PA6.6	0.52	
uni CPB	20%	POM-NLAS	PA6.6	0.53	
uni CPB	Closed	PP	PA6.6	0.30	
uni SNB-M2	20%	POM-D	PA6.6	0.57	0.51
uni SNB-M2	34%	POM-D	PA6.6	0.41	0.38
uni SNB-M2	TAB 34% SLO	POM-D	PA6.6	0.45	0.43
uni SNB-M2	20%	PE	PA6.6	0.24	0.28
uni SNB-M2	34%	PE	PA6.6	0.16	0.19
uni SNB-M2	20%	PP	PA6.6	0.31	0.30
uni SNB-M2	20% RUB R03	PP	PA6.6	0.37	0.36
uni SNB-M2	34%	PP	PA6.6	0.24	0.25
uni SNB-M2	TAB 34% SLO	PP	PA6.6	0.28	0.31
uni SNB-M2	34%'Rib	PP	PA6.6	0.25	0.26
uni SNB-M2	34%'Rib	POM-SLF	PA6.6	0.45	0.45
uni S-MPB	Closed	POM-DI	PA6.6	0.24	0.21

Belt Elasticity

Series	Opening	Material	Pin Material	Elasticity Index (dry)	Elasticity Index (wet)
uni S-MPB	Closed	PE-I	PA6.6	0.09	0.10
uni S-MPB	Closed	PP	PA6.6	0.14	0.14
uni X-MPB	Closed	POM-DI	PA6.6	0.27	0.21
uni X-MPB	Closed	PE-I	PA6.6	0.09	0.08
uni X-MPB	Closed	PE-I	PA6.6	0.08	0.08

Glossary

Term	Explanation
Accumulation conveyors	Conveyors that collect temporary product overflows
Accumulation length (distance)	Distance of product accumulation in running direction of the belt
Adjusted tensile force (adjusted belt pull) per meter of belt width	Applies a service factor to adjust the effective tensile force calculated near the driving sprocket, taking into account eventual inclines and frequent starts/stops
Admissible tensile force per meter of belt width	Force or belt pull per meter of belt width allowed near the driving sprocket under process conditions (temperature, speed)
Transport length	Conveying length measured between the centers of driving and idling shafts
Backflex (Backbend)	Negative bending of the belt (opposite of belt bending over sprocket)
Belt length, inclined	Conveying length measured as vertical projection of distance between the centers of driving and idling shafts
Belt length, theoretical	Length of belt measured around the sprockets including excessive length of catenary sag

Glossary

Term	Explanation
Belt pitch (module pitch)	Center distance between the pivot rods (hinge rods) of a belt module
Belt width	Geometrical width of assembled belt from edge to edge
Bi-directional drive	Driving concept allowing to run the belt forward and backward
Bricklayed	Modules of the assembled belts are staggered from row to row (like bricks of a brick wall)
Carryway	Slider support (belt support) with wear strips or slider bed
Catenary sag	Unsupported length of the belt for absorbing belt length variations due to thermal expansion and load changes of belt
Center driven belt	Sprocket of the belt engaging in the middle of the modules
Central drive concept	Motor located on the lower belt track halfway in between the belt ends (for bi-directional drive)
Chevron supports	Belt supports with wear strips arranged in an overlapping "V-pattern"
Chordal action	Polygon effect: Pulsation of the belt velocity caused by the polygon shape of the driving sprocket, with rise and fall of the belt surface
Coefficient of friction	Ratio of frictional force and contact force acting between two material surfaces

Glossary

Term	Explanation
Coefficient of thermal expansion	Ratio of belt lengthening and the product of belt length and temperature change
Dead plate	Metal or plastic plate installed between meeting conveyors as a transfer bridge
Effective tensile force (effective belt pull) per meter of belt width	Calculated near the driving sprocket, where it reaches in the most cases its maximum value during operation. It depends on the friction forces between the belt and the slider supports (ST) and (SR) as well as friction against the accumulated load
Elevating conveyor	Conveyors transporting the products to a higher or lower level, using flights or other suitable means to keep the products in place
EU	Material is compliant for food contact articles in at least one member state of the European Union
FDA	Food and drug administration. Federal Agency of the US which regulates materials that may come in contact with food
Finger plates (Combs)	Transfer plates, installed at the belt ends of the raised rib belt. Their fingers extend between the ribs of the belt for smooth transfer of the product
Flat Top belt	Flat top belt with 0% open area and a variety of reverse sides
Flat Top belt, perforated	The same as flat top belt solid, but its plate-modules are providing slots or holes for draining fluids
Flight	Belt module with molded vertical plate for elevating conveyors. The flights prevent the product from slipping back while being moved upwards
Flush Grid belt	Belt with large percentage of open area, usually over 20%. Particularly suitable for washing, cooling applications or if dust/dirt is falling off the product

Glossary

Term	Explanation
Gravity take-up	Belt is tensioned by the weight of a roller resting on the belt at the catenary sag on its return way (for long belts mainly
Hinge driven belts	Sprocket engages at the hinge of the belt
Hold down device	Module for straight running belts with T-shaped tab on the belt bottom, running in special guiding rails. Main application for large Z-conveyors to keep the belt on the base when changing from horizontal to inclined run
Hold down tab (hook modules)	"Hook" shaped tabs on the bottom of the radius belt edge, running below a guide rail. Prevent the belt from lifting off the base in the curve
Idling shafts	Shaft at the belt end opposite of the driving shaft. It is normally equipped with sprockets or alternatively for shorter belts flat drums can be used
Indent	Space at belt edge free of flight or rubber lining
ISO 340 and EN 20340	International Standards for flame retardation of conveyor belts. Standardized test specimen is cut out of a belt including rod and modules and will be exposed to a flame for 45 seconds. Standard is fulfilled if the flame is extinct within 15 seconds after the flame is removed
Mass of belt per meter squared	The belt mass (weight) is added to the product mass per meter squared for calculation of the friction force between belt and slider frame
Mass of product per meter squared (product weight per meter squared)	Conveyed product weight as expected to be distributed over the belt surface; calculated average load per meter squared
Nominal tensile strength per meter of belt width	Catalogue value. It reflects the maximum allowable belt pull at room temperature and very low speed
Oblong hole	Pivot hole with oblong shape for better cleaning

Glossary

Term	Explanation
Open area	Percentage of open surface (real openings in projections, perforation of the belt
Open contact area	Percentage of belt surface which is not in contact with the conveyed product
Open hinge	The module hinge is designed in a way, that the pivot rod (hinge rod) is exposed to a part of its surface allowing better cleaning
Perforated Flat Top	See Flat Top perforated
Pitch	The distance from pin to pin in chain or belting
Pitch diameter	Diameter of the sprocket which defines the position of the pivot rods of the driven belt
Pivot pins (Connecting Pins)	These pins link the modules of the belt together to provide pivoting and strong connection. Materials are normally PP, and PE and PA6.6
Polygon effect	"Chordal action": Pulsation of the belt velocity caused by the polygon shape of the driving sprocket, with rise and fall of the belt surface
Product Support	A plastic insert for belting and chain. Product supports can increase the angle of inclined conveyors by supporting the product
PV Limits	PV Limits is the relationship between load and speed
Radius belt	Belt suitable for running around curves (radius applications) with a minimum inside radius of 2.2 times the belt width

Glossary

Term	Explanation
Raised Rib belt	Belt with higher longitudinal ribs on its top surface. These ribs create longitudinal "slots" for the engagement of finger plates for smooth product transfer at the belt end.
Screw type take-up	The catenary sag is adjusted by means of a screw tensioning device at the idling shaft of the conveyor
Service factor	The calculated effective belt pull is adjusted with the service factor taking into account eventual heavy running conditions (start/stop, inclination)
Side guards	Plates designed to be installed lengthwise at the belt edge to form a wall. Usually used in connection with Flights
Slider support/bed	Frame equipped with wear strips to carry the running belt with low friction and wear. A closed plate is called a slider bed
Speed factor	The nominal tensile force, valid at very low speed and room temperature, is reduced to the permissible tensile force by the influence of higher speed and/or temperature; therefore it is multiplied with the respective factor
Spiral conveyor	Radius belt with more than 1 full turn, travelling in a helical path around a central cylinder upwards or downwards
Sprocket	Gear, mostly plastic or exceptionally from metal, shaped to engage in the grid pattern of the belt modules, providing positive torque transmission to the belt
Take-up	Tensioning device for adjustment of the catenary sag, screw type, gravity type or spring loaded type at the idling shaft of the conveyor
Temperature factor	The nominal tensile force, valid at very low speed and room temperature, is reduced to the admissible tensile force by the influence of higher speed and/or temperature; therefore it is multiplied with the respective factor
USDA	United States Department of Agriculture. US federal agency which has defined requirements for equipment which may be in contact with meat, dairy and poultry
Wearstrip	Plastic strip, mainly from PE, used on the support frame of the belt to provide low friction and low wear

Chemical Resistance Chart

Chemical	Temperature °C	Concentration %	PP	PE	POM	PA	PET/PBT	PC	GR	PP + GF	PA + GF	PVDF	PSU	TEFLON	TPE
A															
POMdehyde Aq.	20	40	**R**	**R**	**R**	**S**	**R**	**Q**				**R**	**Q**		
POMdehyde Aq.	60		**S**					**NR**							
POMyde	20	40		**S**	**R**										
POMyde	20	100		**S**	**S**										
Acetamide Soln.	20	50			**R**	**S**									
Acetate Solv	20		**NR**			**S**									
Acethyl Chloride	20				**Q**	**Q**									
Acetic Acid Aq.	20	5	**R**	**R**	**R**	**S**	**R**	**R**							
Acetic Acid Aq.	60	5	**R**	**R**	**R**	**Q**									
Acetic Acid Aq.	20	10	**R**	**R**	**R**	**S**	**R**	**R**							
Acetic Acid Aq.	60	10	**R**	**R**	**S**	**Q**	**R**	**S**							
Acetic Acid Aq.	20	20	**R**	**R**	**Q**	**Q**	**R**	**R**							
Acetic Acid Aq.	60	20	**R**	**R**	**Q**	**Q**	**S**	**S**							
Acetic Acid Aq.	20	95	**S**	**S**	**NR**	**NR**	**Q**	**S**							
Acetic Acid Aq.	60	95	**S**	**Q**	**NR**	**NR**	**Q**	**S**							
Acetic anhydride	20	100	**R**		**NR**	**NR**									
Acetic anhydride	60	100	**R**												
Acetone	20	100	**R**	**S**	**R**	**R**	**S**	**Q**					**Q**		**R**
Acetone	60	100	**S**	**Q**	**S**	**R**	**NR**	**NR**							
Acetophenone	20		**R**		**R**	**R**	**R**								
Acetyl Chloride	20					**NR**									
Acetylene	20		**R**		**R**	**R**	**R**	**R**							
Acrylic Acid	20				**Q**	**NR**	**R**								**NR**
Acrylic Emulsions	20			**R**											
Acrylic Emulsions	60			**S**											
Acrylonitril	20		**S**												
Adipic acid	20			**R**											**NR**
Air	20				**R**	**R**	**R**								
Alcohols (see Methanol, Ethanol ect)	20		**R**	**R**	**R**	**R**									
Alcohols, Aliphatic	20														
Alcohols, Amyl	20		**S**		**R**	**R**									
Alcohols, Benzyl	20				**R**										
Alcohols, Butyl	20				**R**										
Alcohols, Diacetone	20				**R**										
Alcohols, Ethyl	20				**R**										
Alcohols, Hexyl	20				**R**										
Alcohols, Isobutyl	20				**R**										
Alcohols, Isopropyl	20				**R**										
Alcohols, Methyl	20				**R**										
Alcohols, Octyl	20				**R**										
Alcohols, Propyl	20				**R**										
Aliphatic Hydrocarbon Blend	20				**R**	**R**	**R**								
Alkylbenzenes (Shellsol A)	20				**R**	**R**	**R**								
Allyl alcohol	20	96	**R**	**R**	**S**	**S**	**R**	**Q**					**S**		
Allyl chloride	20														

R = Recommended. No attack, possibly slight absorption. No effect on mechanical properties.

S = Suitable. Slight attack by absorption. Some swelling and a small reduction in mechanical properties likely.

Q = Questionable. Moderate attack of appreciable absorption. Material will have limited life.

NR = Not Recommended. Material will decompose or dissolve in a short time.

Chemical Resistance Chart

Chemical	Temperature °C	Concentration %	PP	PE	POM	PA	PET/PBT	PC	GR	PP + GF	PA + GF	PVDF	PSU	TEFLON	TPE
Alum Potassium Sulfate (Alum)	20	10	R	R		R									
Alum Potassium Sulfate (Alum)	20	100	R			NR									
Aluminium acetate	20			R	R	R	R								
Aluminium Chloride Aq.	20	20	R	R	S	S							R		
Aluminium Chloride Aq.	60	20	R	R	Q	S									
Aluminium Chloride	20	100	R	R	S	NR									
Aluminium Chloride	60	100	R	R	Q	NR									
Aluminium Fluoride	20		R	R	S	NR									
Aluminium Hydroxide	20		R	R	R	R	R	Q							
Aluminium Hydroxide	60		R		R			NR							
Aluminium Oxalate	20			R											
Aluminium Nitrate	20		R	R	S										
Aluminium Potassium Sulfate	20	10			Q										
Aluminium Potassium Sulfate	20	100			Q										
Aluminium Salts of Minerals (Chloride, Sulfate ect)	20				S	S	R	R							
Aluminium Sulphate Aq.	20		R	R	S	R									
Aluminium Sulphate Aq.	60		R	R	S	R									
Alums	20			R											
Amino Acids	20				R	R	R								
Amines	20				NR	R									
Ammonia	20	10	R	R	NR		R								
Ammonia	60	10	R	R	NR		NR								
Ammonia	20				NR		Q								
Ammonia	60				NR		NR								
Ammonia Gas	20	20	R	R	NR	R	Q	Q							
Ammonia Gas	60	20	R	R	NR	R	NR								
Ammonia Anhydrous	20		R		NR	R									
Ammonia, liquid	20		R		NR										
Ammonia, Nitrate	20		R		Q										
Ammonium, Acetate	20				NR	R									
Ammonium bicarbonate	20			R											
Ammonium bifluoride	20				NR										
Ammonium Carbonate Aq.	20		R	R	NR	S									
Ammonium Carbonate Aq.	60		R	R	NR	S									
Ammonium Caseinate	20				NR										
Ammonium Chloride Aq.	20		R	R	S	Q		R					R		
Ammonium Chloride Aq.	60		R	R	S			R							
Ammonium Fluoride	20	20	R	R											
Ammonium Fluoride	60	20	R	R											
Ammonium Hydrogen	20				R	R	R								
Ammonium Hydrosulphide	20			R											
Ammonium Hydroxide	20	5	R	R	S	R	R	Q							S
Ammonium Hydroxide	60	5	R	R	S	R		NR							
Ammonium Hydroxide	20	30	R	R	Q			NR							
Ammonium Hydroxide	60	30	R	R	Q			NR							
Ammonium Metaphosphate	20			R											
Ammonium Metaphosphate	60			R											
Ammonium Nitrate	20		R	R	S	Q									
Ammonium Nitrate	60		R	R	S	Q									
Ammonium Oxalate	20			R	S										
Ammonium Persulphate	20		R	R	NR	NR									
Ammonium Persulphate	60		R	R	NR	NR									
Ammonium Phrosphate	20		R	R	S	R									
Ammonium Phrosphate Dibasic	20		R												
Ammonium Phrosphate Monobasic	20		R												
Ammonium Phrosphate Tribasic	20		R												

Chemical Resistance Chart

Chemical	Temperature °C	Concentration %	PP	PE	POM	PA	PET/PBT	PC	GR	PP + GF	PA + GF	PVDF	PSU	TEFLON	TPE
Ammonium Salts of minerals	20				R	R	R	R							
Ammonium Sulphate	20		R	R	S	Q		Q							
Ammonium Sulphate	60		R	R	S	Q									
Ammonium Sulfide	20			R	NR										
Ammonium Sulfide	60			R	NR										
Ammonium Thiosulfate	20				S										
Ammonium Thiocyanate	20			R	R	R	R								
Ammonium Thiocyanate	60			R											
Amyl Acetate	20		S	Q	R	Q	R	Q							
Amyl Acetate	60		Q	Q	S	Q									
Amyl Alcohol	20		R	R	R	R	R								
Amyl Alcohol	60		R	R	R	R									
Amyl Chloride	20	100	NR	S	R	Q		NR							
Amyl Chloride	60	100	NR	Q	R	Q		NR							
Aniline	20		S	R	R	Q									
Aniline Hydrochloride	20		R	Q											
Aniline Sulphate	20			Q											
Aniline	20	100	R	R	S	S	S	Q					Q	R	
Aniline	60	100		Q		Q		NR							
Animal Oils	20			S											
Antimony Chloride	20			R											
Antimony Chloride	60			R											
Antimony Pentachloride	20			R											
Antimony Trichloride	20		R												
Anodizing Baths (30% nitric acid 10% sulfuric acid)	20				Q	S	S								
Anthraquinone	20				R	S									
Antifreeze (see Coolants)	20				NR										
Antimony Trichloride Aq.	20				Q	Q		R							
Aqua Regia (HCL/HNO3)	20		Q	Q	Q	Q	Q								
Aqua Regia (HCL/HNO3)	60		Q	NR	NR										
Arcton	20			S											
Argon	20				R	R	R								
Aromatic Hydrocarbon Blend	20				R	R	S								
Arcenic Acid	20		R	R	Q	R	Q								
Asphalt	20		R		S	R	R								
B															
1-Butene, cis-2-butene (Liquefied gas DIN 51622)	20				R	R	R								
Bacteria (DIN 53739)	20				R	R	R								
Baking Enamels	20				S	R	R								
Barium Carbonate	20		R	R	R	R									
Barium Carbonate	60		R	R	R	R									
Barium Chloride Aq.	20		R	R	R	Q									
Barium Chloride Aq.	60		R	R	R	Q									
Barium compounds	20		R	R											
Barium compounds	60														
Barium Cyanide	20				S										
Barium Hydroxide	20		R	R	NR	R									
Barium Hydroxide	60		R	R	NR	R									
Barium Nitrate	20				S										
Barium Sulphate Aq.	20		R	R	S	R									
Barium Sulphate Aq.	60		R	R	S	R									
Barium Sulphide	20		R	R	R	S									
Barium Sulphide	60		R	R	R	S									
Beef Suet	20					R									
Beer	20		S	R	R	R	R	R							

Chemical Resistance Chart

Chemical	Temperature °C	Concentration %	PP	PE	POM	PA	PET/PBT	PC	GR	PP + GF	PA + GF	PVDF	PSU	TEFLON	TPE
Benzaldehyde	20		Q	Q	R	Q	R	Q							
Benzaldehyde	60		Q		R	NR		NR							
Benzene	20	100	Q	S	R	R	R	NR							
Benzene	60	100	NR	Q	R	R	Q	NR							
Benzene Sulphonic Acid	20		R	R											
Benzene Sulphonic Acid	60			S											
Benzoic Acid	20		Q	R	S	Q	R								
Benzole	20	100	S	S	R	R									
Benzonitril	20														
Benzyl Alcohol	20		S	Q	R	S	Q	Q					S		
Benzyl Chloride	20				R										
Benzyl	20					R									
Beverages	20				R	R	R	R							
Boi Diesel	20					R									
Bismuth Carbonate	20			R											
Bismuth Carbonate	60			R											
Bitumen (DIN 51567)	20		R		R	R	R								
Bleaching agentn (Aqueous: 12,5% Active Chlorine)	20		R	R	Q	Q	S	R							
Bleaching Lye (Borax)	20		R	R	Q	Q		Q					Q		
Bleaching Lye (Borax)	60			R											
Blood	20					R									
Bromine	20	100	Q	Q	Q	Q	Q	Q							
Borax	20		R	R	S	R									
Borax	60			R											
Boric Acid Aq.	20		R	R	S	S	R	R					R		
Boric Acid Aq.	60		R	R	S	Q		R							
Boron Trifluoride	20			R	Q	Q	Q								
Brake Fluid	20		R	R	R	R	R								Q
Brake Fluid	60						R								
Brake Fluid (DOT 3-5, FMVSS 116)	20				R	S	R	Q							Q
Brake Fluid (SEA J 1703, DIN 53521)	20				Q	Q	R								Q
Brake Fluid Hydraulan (BASF)	20				R	R	R								Q
Brandy	20				R	R	R								
Brewery Slop	20				S										
Brine	20		R	R											
Bromic Acid	20			R		NR									
Bromic Acid	60			R		NR									
Bromine Liquid	20		Q	Q	Q	Q		Q							
Bromine Liquid	60		NR	Q	NR	Q		NR							
Bromine Vapour	20			Q	Q	S	Q								
Bromine Water	20		Q		Q	S	Q								
Bromoform	20							NR							
Bromoform	60							NR							
Bromochlorodifluoromethane	20				R	R	R								
Bromotrifluoromethane	20				R	R	R								
Butadiene	20				R	R	R	NR							
Butadiene	60				R			NR							
Butanol	20					R	R								
Butanol	60							Q							
Butandiol	20	10		R											
Butandiol	60	10		R											
Butandiol	20	100		R											
Butandiol	60	100		R											
Butane	20		Q	R	R	R	R	R					R		
Butane	60						R								
Butanediols	20		R	R	R	R	R								

Chemical Resistance Chart

Chemical	Temperature °C	Concentration %	PP	PE	POM	PA	PET/PBT	PC	GR	PP + GF	PA + GF	PVDF	PSU	TEFLON	TPE
Butanols	20		S	R	R	R	R	R					S		NR
Butene Glycol	20				R	R	R	R							
Butter, Buttermilk	20				R	R	R								
Butyl	20		S			R									
Butyl Acetate	20		Q	S	R	R	S	Q					Q		
Butyl Acetate	60		S	S			S	NR							
Butyl Acrylate	20		S		R	R	S								
Butyl Alcohol	20	100		R				S							
Butyl Alcohol	60	100		R				Q							
Butyl Amine	20				Q										
Butyl Ether	20				NR										
Butyl Glycolate	20				R	R	R								
Butyl Phthalate	20				R	R	R								
Butyraldehyde	20			Q											
Butylacetate	20				R										
Butylene	20				R										
Butyric Acid	20		R	Q	R	Q	Q	Q							
Butyric Acid	60		R	Q	S	NR		NR							
n-butyl Ether	20				R	R	R								
n-butyl Glycol	20				R	R	R								
C															
Calcium Bisulfate	20				NR	R									
Calcium Bisulphite	20		R	R	NR	R									
Calcium Bisulphite	60		R	R	NR										
Calcium Carbonate	20		R	R	R	R	R	R							
Calcium Carbonate	60		R	R	R	R									
Calcium Chlorate	20			R	R	R									
Calcium Chlorate	60			R	R	R									
Calcium Chloride	20		R	R	S	R	R	R					R		S
Calcium Chloride	60		R	R	Q		R								
Calcium Hydroxide	20		R	R	Q	R	R	Q							
Calcium Hydroxide	60		R	R	Q	R		NR							
Calcium Hypochlorite	20		R	R	Q	Q	S	S							
Calcium Hypochlorite	60		R	R	NR	NR		NR							
Calcium Nitrate	20	50		R	Q										
Calcium Nitrate	60	50		R	NR										
Calcium Oxide	20				R										
Calcium Sulphate	20		R	R	Q	R									
Calcium Sulphate	60		R	R	NR										
Calsium Phosphate	20			R											
Calgon	20		R		R										
Camphor	20		R		R	R	R	Q							
Camphor Oil	20			Q		R									
Camphor Oil	60			Q											
Carbolic Acide	20				NR										
Carbon Bisulphide	20	100	Q	S	R	R									
Carbon Dioxide	20		R	R	R	R	R	R							
Carbon Dioxide	60			R	R	R									
Carbon Disulfide	20		Q	Q	S	S	Q	NR							
Carbon Disulfide	60		Q	NR	S	Q	Q	NR							
Carbon Monoxide	20		R	R	R	R	R								
Carbon Monoxide	60		R	R	R										
Carbon Tetrachloride	20		Q	Q	S	R	R	NR							
Carbon Tetrachloride	60		Q	NR	S	R	Q	NR							
Carbonated Water	20		R		R	R									

Chemical Resistance Chart

Chemical	Temperature °C	Concentration %	PP	PE	POM	PA	PET/PBT	PC	GR	PP + GF	PA + GF	PVDF	PSU	TEFLON	TPE
Carbonic Acid	20		R	R	S	R									
Carbonic Acid	60		R	R	S										
Casein	20				R	R	R								
Castor oil	20			R				R							
Castor oil	60			S											
Catsup	20		R		S	R									
Caustic Soda (see Sodium Hydroxide)	20	10	R	R		R									
Caustic Soda (see Sodium Hydroxide)	20	100				R									
Caustic Potash Solution	20	50	R	R		R									
Cellosolve	20							Q							
Cellosolve	60							NR							
Cellulose Lacquers	20				R	R	R								
Cemnet	20				R	R	R								
Ceresin	20				R	R	R								
Cetyl Alcohol (see Hexadecanol)	20														
CFC	20					R									
Chloracetic Acid	20		Q		NR	NR	NR								
Chloral Hydrate	20			Q		NR									
Chloramines	20				Q	NR	Q								
Chlorinated Biphenyls	20					S									
Chlorine	60		Q	Q	NR	NR	NR	S							
Chlorine	20		Q	Q	NR	NR	NR	Q							
Chlorine Bleach	20		Q												
Chlorine water max. 5ppm	20		S	Q	S	S	Q								
Chloroacetic Acid	20				Q	Q	Q								
Chlorobenzene	20		Q	S	NR	R	Q	R							
Chlorobenzene	60		NR	Q	NR		NR								
Chlorobromomethane	20					S	R								
Chlorodifluoroethylene	20				R	R	R								
Chlorodifluorormethane, Chlorodifluoroethane	20				R	R	R								
Chloroform	20		S	S	S	Q	NR	NR							Q
Chloroform	60		Q	Q	S	Q	NR	NR							
Chlorosulphonic Acid Aq.	20		Q	Q	Q	Q	Q								
Chlorosulphonic Acid Aq.	60		NR	Q	NR	Q									
Chlorothene (see 1,1,1-Trichloroethane)	20														
Chocolate Syrup	20				R										
Chlorox (Bleach)	20		NR			NR									
Chrome Alum Aq.	20		P	S											
Chrome Alum Aq.	60		S	Q											
Chromic Acid Aq.	20	1	R	R	Q	Q	R								
Chromic Acid Aq.	20	10	R	S	NR	NR	S	R							
Chromic Acid Aq.	60	10	R	Q	NR	NR	S								
Chromic Acid Aq.	20	50	S	S	NR	NR									
Chromic Acid Aq.	60	50	Q	Q	NR	NR									
Chromyl chloride	20				Q	Q									
Cider	20			R	R										
Cinnamaldehyde	20					NR									
Citric Acid Aq.	20	10	R	R	S	S	R	R							
Citric Acid Aq.	60	10	S	R	S	Q	Q	R							
Citrus Fruit Juices	20				R	R	R								
Citrus Oils	20		R		R	R	R								
Cleaning Agent: all-purpose cleaner	20				R	R	R								
Cleaning Agent: Household cleaning (Ajax, ATA, Domestos ect)	20				R	R	R								
Cleaning Agent: Toilet cleaner	20				Q	S	R								
Cleaning Agent: Window Cleaner	20				R	R	R								
Clophen A 60 / Petroleum ether (1:1)	20				R	R	R								

Chemical Resistance Chart

Chemical	Temperature °C	Concentration %	PP	PE	POM	PA	PET/PBT	PC	GR	PP + GF	PA + GF	PVDF	PSU	TEFLON	TPE
Cobalt salt	20				R	S									
Coal Gas	20					R									
Coconut Oil Alcohols	20			R											
Coconut Oil Alcohols	60			R											
Cola Concentrates	20			R											
Cola Concentrates	60			R											
Concrete	20				R	R	R								
Coffee	20		R		R										
Coolants: Glysantin / Water 1 .1	20				R	S	Q								
Cooling Liquids DIN 53521	120					Q									
Copper Chloride	20		R	R	R	Q		R							
Copper Chloride	60		R	R	R	NR									
Copper Cyanide	20		R	R	R	R									
Copper Cyanide	60		R	R	R	S									
Copper Fluoborate	20				S										
Copper Fluoride	20	2		R											
Copper Fluoride	60	2		R											
Copper Monochloride	20		R	R											
Copper Nitrate	20		R	R	R	NR									
Copper Nitrate	60		R	R	R	NR									
Copper Salt	20														
Copper Sulphate	20		R	R	Q	Q		R					R		
Copper Sulphate	60		R	R	NR	NR									
Copper Sulphate	20	5		R	Q	NR									
Cottonseed Oil	20			R											
Cottonseed Oil	60			R											
Coumarone and Coumarone resins	20				R	R	R								
Creosote	20			Q	NR		NR								
Cresol (Metacreosol)	20		S	Q	Q	NR	Q	NR							
Cresol (Metacreosol)	60		Q	NR	NR	NR	NR	NR							
Cresylic Acid	20			Q	NR	NR									
Crude oil (see Petroleum)	20		R	R			R								
Crude oil (see Petroleum)	60			S			R								
Cuprous Chloride	20			R											
Cuprous Chloride	60			R											
Cupric Acid	20														
Cupric Chloride	20			R											
Cupric Chloride	60			R											
Cupric Nitrate	20			R											
Cupric Sulphate	20			R											
Cutting Oils (see Lubricating Oils)	20														
Cyanic Acid	20				NR										
Cycloalkanes	20				R	R	R	S							
Cyclohexane, Cycloheptane	20		Q	S	R	R	R								
Cyclohexanol	20		R	S	R	S	R								
Cyclohexanol	60			S											
Cyclohexanone	20		S	Q	R	R	R	R							
Cyclohexanone	60			NR	R			S							
D															
1,2-Dichloroethane	20														
Decontaminating agents (MIL-D-50030 F)	20				R	R	R								
Dekalin	20		S		R	R	S	R							
Descaler (based on formic, acetic, citric acids)	20	10			S	R	R								
Detergents, Organic	20		R	R	R	R	R								
Detergents, Synthetic	20		R	R			R								

Chemical Resistance Chart

Chemical	Temperature °C	Concentration %	PP	PE	POM	PA	PET/PBT	PC	GR	PP + GF	PA + GF	PVDF	PSU	TEFLON	TPE
Detergents, Synthetic	60			R			R								
Developers, Photographic (Rodinal, Agfa, PH 11)	20			R	R	R	R								
Developers, Photographic (Rodinal, Agfa, PH 11)	60			R											
Dexron	20					Q									
Dextrin	20			R											
Dextrin	60			R											
Dextrose	20			R											
Dextrose	60			R											
Diacetone	20		NR			R									
Dichlorethane	20				R	R									
Dibutylphthalate	20		R	S	R	R	R	Q							
Dibutylphthalate	60			Q			Q								
Dichlormethane (see Methylene Chloride)	20				R	R	Q								
Dichlorobenzene	20		S	Q		R	Q								
Dichlorofluoromethane	20				R	R	R								
Dichlorotetrafluoroethane	20				R	R	R								
Diesel Oil + Fuel (see Fuels)	20		S	R	R	R	R								
Diesel Oil + Fuel (see Fuels)	60					R	R								
Diethyle Ether	20		R	Q	R	R	R	Q							S
Diethyle Ether	60						Q								
Diethylamine	20		Q		S										
Diethylene Glycol	20		R	R	R	S	R	S							
Diethylene Glycol	60			R	R			Q							
Diethylene formamide	20							NR							
Diethylene formamide	60							NR							
Dichlorethylene	20		Q												
Diglycolic Acid	20			R											
Diglycolic Acid	60			R											
Difluoromethane	20				R	R	R								
Dimethyl Aniline	20				NR	R									
Dimethyl Carbinol (see Isopropyl Alcohol)	20														
Dimethylacetamide	20				R	R									
Dimethylamine	20			Q		R									
Dimethylamine	60			NR											
Dimethylformamide	20				Q	S	R	NR							
Dimethylformamide	60					NR									
Dimethylsilane	20					R									
Dimethylsulfoxide (DMSO)	20					S	R								
Dimethylsulfoxide (DMSO)	60					NR									
Dioctyl Phthalate	20		R	S	R	R	R	S							
Dioxan	20		S	R	S	R	R	Q					Q		
Dioxan	60						NR	NR							
Diphenyl (Diphenyl and Diphenyl Ether)	20				R	R	Q								
Diphenyl Oxide	20				NR										
Dishwasher detergent	20				S	R	S								
Dishwasher detergent	60						Q								
Disinfectant (Alcohol-based)	20	10			R	R	R								
Disinfectant (Aldehyde-based)	20	10			R	R	R								
Disinfectant (Based on phenols)	20	10			S	S	S								
Disinfectant (based on quaternary ammonium compounds)	20	10			R	R	R								
Disinfectant (based on quaternary phosphonium compounds)	20	10			R	R	R								
Disinfectant (Chlorine-based)	20	10			Q	Q	R								
Disinfection by boiling	20				R	R	S								
Disinfection by fractional vaccum process	20				R	R									
Disinfection by gas sterilization (see Ethylene oxide)	20														
Disinfection by hot air/steam/hot air	20				R	R	S								

Chemical Resistance Chart

Chemical	Temperature °C	Concentration %	PP	PE	POM	PA	PET/PBT	PC	GR	PP + GF	PA + GF	PVDF	PSU	TEFLON	TPE
Disinfection by irradiation (25 kGy for 6 h)	20				S	R	R								
Disodium Phosphate	20			R											
Disodium Phosphate	60			R											
Disopropyl Ether	20														
Dispersions, Aqueous (BASF Acronal, Propifan)	20				R	R	R								
E															
Edible Oils	20				R	R	R	R							
Electroplating baths, acidic	20				Q	Q	R								
Electroplating baths, alkali (Cyanides)	20				R	R	S								
Emulsifiers	20			R											
Emulsions, Photographic	20			R											
Emulsions, Photographic	60			R											
Engine oils (see Lubricating Oils)	20					R									
Epichlorhydrin	20					S									
Epsom Salts	20		R		S										
Ethane	20				R	R	R								
Ethanol	20		R		R	R	R	R							S
Ethanol	60						R								
Ethanolamine	20				NR										
Ethanoic Acid	20	10	R	R		Q									R
Ether, Diethyl	20			Q	R	Q									
Ethereal oil	20				R	R	R								
Ethyl	20		R			R									
Ethyl Acetate	20	100	S	S	R	R	Q	NR							Q
Ethyl Acetate	60	100	Q	NR	R		NR	NR							
Ethyl Alcohol	20	35		R		S									
Ethyl Alcohol	60	35		R		Q									
Ethyl Alcohol	20	100	R	R		S		R							
Ethyl Alcohol	60	100		R		NR		S							
Ethyl Butyrate	20			S											
Ethyl Butyrate	60			Q											
Ethyl Chloride	20		S	Q	R	R		NR							
Ethyl Chloride	60		Q	NR	R			NR							
Ethyl Dichloride	20	100	S	Q			NR								
Ethyl Dichloride	60						NR								
Ethyl Ether	20		NR	NR	R	R	R	NR							
Ethyl Ether	60		NR	NR	R			NR							
Ethyl Formate	20														
Ethylene	20				R	R	R								
Ethylene Carbonate	20					R	Q								
Ethylene Chloride	20		S	Q	S	R		Q							
Ethylene Chloride	60		Q	NR	S			NR							
Ethylene Chlorohydrin	20			Q	NR	S	Q								
Ethylene Chlorohydrin	60			NR											
Ethylene Dichloride (see Ethylene Chloride)	20		S	Q	S	R		Q							
Ethylene Dichloride (see Ethylene Chloride)	60		Q	NR	S			NR							
Ethylene Diamine	20				NR										
Ethylene Glycol Aq.	20		R	R	R	S	R	R							R
Ethylene Glycol Aq.	60		R	R	S	S	NR								
Ethylene Oxide	20		Q	Q	Q	R	R	Q							
Ethylene Oxide	60				NR			NR							
Ethylenediamine	20					R									
Exhaust fumes from Internal combustion engine	20				R	R	R								
F															

Chemical Resistance Chart

Chemical	Temperature °C	Concentration %	PP	PE	POM	PA	PET/PBT	PC	GR	PP + GF	PA + GF	PVDF	PSU	TEFLON	TPE
Fats and Waxes, edible fats	20				R	R	R								
Fatty Acids	20		R		R	R	R								
Fatty Alcohols	20				R	R	R								
Fatty Alcohols, Sulfonated	20				R	R	R								
Ferric Chloride	20		R	R	NR	Q									
Ferric Chloride	60		R	R	NR	NR									
Ferric Cyanide	20		R	R											
Ferric Nitrate	20		R	R	NR	NR									
Ferric Nitrate	60		R	R	NR	NR									
Ferric Sulphate	20		R	R	NR	R									
Ferrous Ammonium Citrate	20			R											
Ferrous Chloride Aq.	20	10	R	R	NR	Q									R
Ferrous Chloride Aq.	60	10	R	R	NR	NR									
Ferrous Sulphate	20		R	R	NR	NR									
Ferrous Sulphate	60		R	R	NR	NR									
Fish Solubles	20			R		R									
Fixing Solution, Photographic	20		R	Q		R	R								
Fluoboric Acid	20		R	R	R	Q									
Fluoboric Acid	60		R	R	R	Q									
Fluorinated hydrocarbons, Fluorocarbons	20				R	R	R								
Fluor	20					NR									
Fluorine	20		S	S	Q	Q	Q								
Fluorine	60			Q	NR	NR									
Fluosilicic Acid Aq.	20	30	R	R	R	NR									
Fluosilicic Acid Aq.	60	30	R	R	R	NR									
Fluosilicic Acid	20	100		R	R	NR									
Fluosilicic Acid	60	100		Q	R	NR									
Formaldehyde Aq.	20	10	R	R	R	S	R	S					Q		Q
Formaldehyde	20	40	R	S	R	NR		R							
Formaldehyde	60	40	R		R			S							
Formamide	20				R	S									
Formic Acid Aq.	20	10	R	R	S	Q	R	R							Q
Formic Acid Aq.	60	10	R	R	S	NR	NR	Q							
Formic Acid	20	50	R	R	Q	NR	Q								
Formic Acid	60	50	R	R	Q	NR	NR								
Formic Acid	20	100	S	R	Q	NR	NR								
Formic Acid	60	100	S	R	Q	NR	NR								
Freon 11	20				NR	R	R								
Freon 11	60				NR		R								
Freon 12 (Arcton 12)	20		S	S	S	R		S							
Freon 22	20				R	R									
Freon 113	20				R		R								
Freon 113	60						R								
Freon TF	20		NR		R										
Fructose	20			R											
Fructose	60			R											
Fruit Juices	20		R	R	Q	R	R								
Fruit Pulp	20			R	Q										
Fuel Oil	20		S	R	R	R	R								
Fuel Oil	60		S	Q	R										
Fuel, engine Diesel	20				R	R	R	S							S
Fuel, engine FAM test fuel (5% ethanol)	20				R	R	R	Q							NR
Fuel, engine Gasoline (Normal & Premium grade)	20		Q	Q	R	R	R	S							NR
Fuel, engine High performance fuels (Dekalin)	20				R	R	S								NR
Fuel, engine M15 mixture (15% Methanol)	20				R	R	R								NR
Fungi (DIN 53739 ISO 846)	20				R	R	R								

Chemical Resistance Chart

Chemical	Temperature °C	Concentration %	PP	PE	POM	PA	PET/PBT	PC	GR	PP + GF	PA + GF	PVDF	PSU	TEFLON	TPE
Furan Resin	20				NR										
Furfural	20	100	NR	Q	R	R	R								
Furfural	60	100	NR	Q	R										
Furfural Alcohol	20		R	Q	R	R	R								
Furfural Alcohol	60		R	Q	R	R	R								
G															
Gallic Acid	20			R		R									
Gallic Acid	60			R		R									
Gas sterilization (see Ethylene oxide)	20														
Gasoline (see Fuels)	20		Q	Q	S	R	R	Q							Q
Gasoline (see Fuels)	60		Q	Q	S	R		Q							
Gasoline Leaded	20					R									
Gasoline Unleaded	20					R									
Gear oils (EP, hypoid, ATF, Manual transmission)	20						R								
Gease antifriction bearing grease DIN 51825	20														
Gelatine	20		R		R	R	R								
Gin	20			R											
Gin	60			Q											
Glacial Acetic Acid	20						NR								
Glacial Acetic Acid	60						NR								
Glucose	20		R	R	R	R	R	R							
Glucose	60		R	R	R										
Glue	20				R	R	R								
Glycerine	20		R	R	R	R	R	S					R		R
Glycerine	60		R	R	R										
Glycerol	20		R	R	R	R	R	S							
Glycerol	60						R								
Glycol, alkyl glycol ether	20		R	R	R	S	R								S
Glycol, alkyl glycol ether	60			R		Q									
Glycolic Acid	20	30	R	R	S	Q									
Glycolic Acid	60	30	R	R	Q										
Glysantin BASF (see Coolants)	20														
Grape Sugar	20			R											
Grape Sugar	60			R											
Grase (Based on silicone oils) See Silicone oils	20				Q										Q
Grease (Based on ester oils, diester oils, phosphoric acid ester, synthethic oils)	20				S	S	R								Q
Grease (Based on Polyphenylester)	20				S	R									Q
H															
Hair dyes	20				R	S									
Hardening oils	20				R	R	R								
Heating oils (DIN 51603)	20				R	R	R								
Helium	20				R	R	R								
Heptane	20		NR	NR	R	R	R	R					R		
Heptane	60		NR	NR			R								
Hexachlorobenzene	20				R	R									
Hexachloroethane	20				R	R									
Hexadecanol (Hexanol)	20			Q											
Hexafluoroisopropanol	20				NR	NR	NR								
Hexamethylenetetramine	20						R								
Hexane	20		R	NR	R	R	R	Q					R		
Hexane	60		S		R		R	NR							
Hexanol	20			R											
Hexanol	60			R											
Hexyl	20		R			R									

Chemical Resistance Chart

Chemical	Temperature °C	Concentration %	PP	PE	POM	PA	PET/PBT	PC	GR	PP + GF	PA + GF	PVDF	PSU	TEFLON	TPE
Honey	20		R		R										
Humic Acid	20				S	S	R								
Hydraulic fluids	20				R	R	R								
Hydraulic fluids	60					R	R								
Hydraulic oil (DIN 51525)	20		Q			R	R								
Hydraulic oil (MIL-H 5606)	20		Q			R	R								
Hydraulic oil (VDMA 24318)	20		Q			R	R								
Hydrazine	20				R										
Hydriodic acid, Hydrogen iodide	20				Q	Q	S								
Hydrobromic acid	20	2	R	R	S	Q	R								
Hydrobromic Acid Aq.	20	10	R	R	Q	Q	S								
Hydrobromic Acid Aq.	20	20	R	R	NR	NR	S								
Hydrobromic Acid Aq.	20	40	R	R	NR	NR	Q								
Hydrochloric Acid Aq.	20	10	R	R	NR	NR	S								
Hydrochloric Acid Aq.	60	10	R	R	NR	NR	Q								
Hydrochloric Acid Aq.	20	25	R	R	NR	NR	Q								Q
Hydrochloric Acid Aq.	20	30	R	R	NR	NR	Q	NR							Q
Hydrochloric Acid Aq.	20	36	R	R	NR	NR	NR	NR							Q
Hydrochloric Acid Aq.	20	100		R	NR	NR	NR	NR							
Hydrochloric Acid Aq.	60	100		R	NR	NR	NR	NR							
Hydrocyanic Acid	20			R	S										
Hydrocyanic Acid	60			R	S										
Hydrofluoric Acid Aq.	20	4	R	R	Q		R	NR							
Hydrofluoric Acid Aq.	20	10		R	Q		R	NR							
Hydrofluoric Acid Aq.	60	10		R	NR		R	NR							
Hydrofluoric Acid Aq.	20	40	R	R	NR	Q	R	NR							
Hydrofluoric Acid Aq.	20	60	S	R	NR	NR		NR							
Hydrofluoric Acid Aq.	20	75	S	R	NR	NR		NR							
Hydrofluoric Acid Aq.	60	75	S	Q	NR	NR		NR							
Hydrofluosilicic acid	20	30	R	R	Q	Q	Q								
Hydrogen	20	100		R	R	R	R								
Hydrogen	60	100		R											
Hydrogen Bromide	20	10		R											
Hydrogen Bromide	60	10		R											
Hydrogen Chloride	20		R	R	Q	Q	Q								
Hydrogen Chloride	60			R		NR									
Hydrogen Fluoride (Anhydrous)	20		R		NR	NR	NR								
Hydrogen Gas	20					R									
Hydrigen Iodide	20					NR									
Hydrogen Peroxide Aq.	20	0.5	R	R	R	S	R	R							R
Hydrogen Peroxide Aq.	20	5	R	R	R	Q	R	R							R
Hydrogen Peroxide Aq.	20	10	R	R	Q	NR	R	R							R
Hydrogen Peroxide Aq.	60	10		R		NR									
Hydrogen Peroxide Aq.	20	20				NR	R								
Hydrogen Peroxide Aq.	60	20				NR	NR								
Hydrogen Peroxide Aq.	20	30	R	R	NR	NR	S	R							
Hydrogen Peroxide Aq.	60	30		R		NR	NR								
Hydrogen Peroxide Aq.	20	90		R	NR	NR	NR	S							
Hydrogen Peroxide Aq.	60	90		S	NR	NR	NR	S							
Hydrogen Phosphide	20	10		R	S	S	R								
Hydrogen Phosphide	20	100		R											
Hydrogen Phosphide	60	100		R											
Hydrogen Sulphide	20		R	R	S	S	R								
Hydrogen Sulphide	60		R	R	S	Q									
Hydrogenated Vegetable Oils	20														
Hydroquinone	20			R	R	Q	R								

Chemical Resistance Chart

Chemical	Temperature °C	Concentration %	PP	PE	POM	PA	PET/PBT	PC	GR	PP + GF	PA + GF	PVDF	PSU	TEFLON	TPE
Hydroquinone	60			R	R										
Hypochlorous Acid	20			R											
Hypochlorous Acid	60			R											
Hydroxyacetic Acid	20	70			R										
Hydroxylamine Sulphate	20	10	R												
Hyraulan BASF (see Brakr Fluids)	20														
I															
Impregnating oils	20				R	R	R								
Inks	20		R	R	R	R	R								
Inks	60			R	R	R									
Iodine (In Alcohol)	20		R	S	Q	Q									
Iodine (In Alcohol)	60			Q											
Iodine (In Pot Iodine) Aq.	20				Q										
Iodine (Wet)	20		NR		Q	NR									
Iron Chloride	20	10	R			NR									
Iron Chloride, acidic	20	10			Q	Q									
Iron Thiocyanate	20														
Isobutyl	20		R			R									
Isoctane	20		Q		R	R	R	S							
Isocyanates, aromatics	20				R	R	R								
Isopropyl	20		R			R									
Isopropyl Acetate	20				NR										
Isopropyl Ether	20		NR		NR										
Isopropanol	20		R	R	R	R	R	S					S		
Isopropanol	60						NR								
Isopropylalcohol	20					R									
J															
Jet Fuel (JP3, JP4, JP5)	20		NR		R										
	20														
K															
Kerosene (Jet Fuel)	20		Q	R	R	R	R	S							
Kerosene (Jet Fuel)	60		NR		R			Q							
Kerosine	20	100	R	R		R	R								
Kerosine	60	100					R								
Ketones	20		NR		Q	R	S								
L															
Lactic Acid Aq.	20	10	R	R	R	R	R	R							R
Lactic Acid Aq.	60	10	R	R	S	Q		S							
Lactic Acid Aq.	20	90	R	R	R	NR	Q	S							R
Lactic Acid Aq.	60	90	R	R	S	NR		S							
Lacquers	20		R		NR										
Lacquers Thinners	20		S		NR										
Lard	20		R		R										
Latex	20			R	S										
Laughing gas (see Nitrous oxide)	20														
Laundry Soap	20						R								
Laundry Soap	60						R								
Lead Acetate Aq.	20	10	R	R	R	R	R								
Lead Acetate Aq.	60	10	R	R	S										
Lead Arsenate	20			R											
Lead Nitrate	20			R											
Lead Sulfamate	20		R		R										

Chemical Resistance Chart

Chemical	Temperature °C	Concentration %	PP	PE	POM	PA	PET/PBT	PC	GR	PP + GF	PA + GF	PVDF	PSU	TEFLON	TPE
Lead Tetra-Ethyl	20			R											
Ligroin	20		NR		S										
Lime (see Cement)	20				S										
Linoleic Acid	20				S										
Linseed Oil	20			S	R	R	R								
Linseed Oil	60						R								
Lithium bromide, lithium chloride	20	10			R	S	R								
Lithium chloride	20	20			R	NR									
Lithium hydroxide	20	10			R	R	R								
LPG (DIN 516222) (see Propane, Porpene)	20														
Lubricating Oil HD Engien oils, hydraulic oils	20		R	R	R	R	R	R							
Lubricating Oil hypoid gaer oil (with EP additives)	20		R	R	S	R	S	R							
Lubricating Oil without HD or EP additives	20		R	R	S	S	R								
Lubricating oil, Gear oil	20		R	R	R	R	R								
Lubricating Oils (Petroleum)	20														
Lubricating Grease, base Diester oil	110					Q									
Lubricating Grease, base Polyphenyle ester	110					R									
Lubricating Grease, base Silicone oil	110					R									
Lutensit, Lutensol BASF	20				R	R	R								
Lye: Ca(OH)2 Calcium Hydroxide	20				NR										
Lye: KOH Potassium Hydroxide	20				R										
Lye: NaOH Sodium Hydroxide	20				Q										
M															
Magnesium Bisulfate	20														
Magnesium Carbonate	20		R	R											
Magnesium Carbonate	60		R	R											
Magnesium Chloride Aq.	20	10	R	R	R	R	R	R					R		
Magnesium Chloride Aq.	60	10	R	R	R										
Magnesium Hydroxide	20		R	R	R	R									
Magnesium Hydroxide	60		R	R	R										
Magnesium Nitrate	20		R	R	R										
Magnesium Nitrate	60		R	R	R										
Magnesium Oxide	20				R										
Magnesium salt	20					R	R	R							
Magnesium Sulphate	20		R	R	R	R		R					R		
Magnesium Sulphate	60		R	R	S										
Maleic Anhydride	20				NR										
Malic Acid	20		S	R	R	S									
Malic Acid	20	25	S	R	Q	S									
Malonic Acid Aq.	20														
Malt	20				R	R	R								
Manganese Salt (Chlorine, Sulphate)	20	10		R	R	R	R	R							
Mash	20				R										
MAPP Gas (C3, C4 aliphatic hydrocarbonats)	20				R	R	R								
Mayonnaise	20		R												
Melamine	20				R										
Mercuric Chloride Aq.	20		R	R	R	NR									
Mercuric Chloride Aq.	60		R	R	S										
Mercuric Cyanide	20		R	R											
Mercuric Cyanide	60		R	R											
Mercurous Nitrate	20			R											
Mercurous Nitrate	60			R											
Mercury	20		R	R	R	R	R	R							
Mercury	60		R	R	R										
Mersolates	20				R		R								

Chemical Resistance Chart

Chemical	Temperature °C	Concentration %	PP	PE	POM	PA	PET/PBT	PC	GR	PP + GF	PA + GF	PVDF	PSU	TEFLON	TPE
Metallic Soaps	20			R											
Methane	20				R	R	R	R							
Methanol	20		R	R	R	R	R	Q					S		R
Methanol	60						NR								
Methyl	20		R			R									
Methyl Acetate	20		R	Q	R	R	S	Q					Q		
Methyl Acetone	20					NR									
Methyl Acrylate	20					S									
Methyl Alcohol	20	6	R	R	R	R									
Methyl Alcohol	20	100	R	S		S		S							
Methyl Alcohol	60	100		S		Q		Q							
Methyl Bromide	20		Q	S	NR										
Methyl Bromide	60			NR											
Methyl Butyl Ketone	20				NR										
Methyl Cellosolve	20		R		NR										
Methyl Chloride	20		NR	Q	R	R	S								R
Methyl Chloride	60			NR											
Methyl Chloroform (see 1,1,1-Trichloroethane)	20					R									
Methyl Dichloride	20				NR										
Methyl Ethyl Ketone	20	100	R	Q	S	R	Q	Q					Q		Q
Methyl Ethyl Ketone	60	100	R	NR			NR	NR							
Methyl Formate	20				R	R	R								
Methyl Glycol	20				R	R									
Methyl Isobutyl Ketone	20		Q					NR							
Methyl Isobutyl Ketone	60		Q					NR							
Methyl Methacrylate	20				NR										
Methylamine	20				Q	R		Q							
Methylbromide	20				R	R									
Methylsulfuric Acid	20			R											
Methylsulfuric Acid	60			R											
Methylene Chloride	20	100	Q	Q	S	NR	NR	NR					NR		
Methylene Chloride	60	100	NR	NR	Q	NR	NR	NR							
Microbes	20				R	R	R								
Milk	20		R	R	R	R	R								
Milk	60		R	R	R										
Mineral Oils (see Lubricating oils)	20		R	S	R	R	R	R					R		
Mineral Oils (see Lubricating oils)	60			Q		R	R	S							
Mineral Spirits	20		R	R	R	R	R								
Mono Chloroacetic alid	20		R												
Molasses	20		R	R	R	R	R								
Molasses	60		R	R	R	R	R								
Monochloroacetic Acid	20				NR										
Monoethanolamine	20				NR										
Morpholine	20														
Mortars (see Cemnet)	20														
Motor Oil	20		R	R	R	R	R								
Motor Oil	60						R								
Moulds (DIN 53739, ISO 846A,B, MIL-T 18404)	20				R	R	R								
Mustard	20		R		S										
N-Methylpyrrolidone	20				R	R									
N															
Naphtha	20		R	NR	R	R	R								
Naphthalene	20		S		R	R	R								
Naphthalenesulfonic acids	20				Q	Q									
Naphthenic acids	20				R	R	R								

Chemical Resistance Chart

Chemical	Temperature °C	Concentration %	PP	PE	POM	PA	PET/PBT	PC	GR	PP + GF	PA + GF	PVDF	PSU	TEFLON	TPE
Naphthols	20					Q									
Natur gas	20				S	R	R								
Nekanil, Nkal surfactants (BASF)	20	10			R	R	R								
Neon	20				R	R	R								
Nickel Chloride	20		R	R	R										
Nickel Chloride	60			R											
Nickel nitrat	20			R		S									
Nickel nitrat	60			R											
Nickel salt (Chloride, Sulfate)	20		R	R	R	S	R								
Nickel salt (Chloride, Sulfate)	60			R											
Nickel Sulphate Aq.	20		R	R	R	S									
Nickel Sulphate Aq.	60		R	R	R										
Nicotine Dilute	20			R											
Nicotine Dilute	60			R											
Nicotinic Acid	20			R											
Nicotinic Acid	60			R											
Nitrating Acid	20				NR										
Nitric Acid Aq.	20	2	R		Q	Q	Q	R							R
Nitric Acid Aq.	20	10				NR	Q								
Nitric Acid Aq.	60	10				NR	NR								
Nitric Acid Aq.	20	50	S	R	NR	NR	NR	S							R
Nitric Acid Aq.	60	50	NR	Q	NR	NR	NR	Q							
Nitric Acid Aq.	20	70	Q	S	NR	NR	NR	Q							
Nitric Acid Aq.	60	70	NR	Q	NR	NR	NR	NR							
Nitric Acid Aq.	20	100	NR	NR	NR	NR	NR	NR							
Nitric Acid Aq.	60	100	NR	NR	NR	NR	NR	NR							
Nitrilotriacetic acid	20				R	R	R								
Nitrobenzene, Nitrotoluene	20		S	S	S	S	R	NR					Q		
Nitrobenzene, Nitrotoluene	60		S	Q	S			NR							
Nitrobenzene, Nitrotoluene	20	100		NR											
Nitrobenzene, Nitrotoluene	60	100		NR											
Nitrocellulose (alcoholic, hazard class A)	20				R	S	S								
Nitrocellulose (alcoholic-free, hazard class A)	20				R	R	S								
Nitrogen	20				R	R	R								
Nitro Glyserin	20			Q											
Nitromethane	20				R	S									
Nitrous Acid	20		NR		NR	NR	NR								
Nitrous Oxide (dry)	20		R		NR	NR	R								
Nitrus fumes	20				Q	S	S								
Noble gases (Argon, Helium, Neon)	20				R	R	R								
Notrogen oxides (Dinitrogen Tetraoxide)	20				Q	S	R								
O															
Octane, Octene	20				R	R	R								
Octane, Octene	60						R								
Octyl	20			R		R									
Octyl	60			Q											
Oil, for transformers, switchgear (DIN 51507)	20				R	R	R								NR
Oils Vegetable	20		R	R	R	R	R								
Oils: Aniline	20		R		NR										
Oils: Anise	20				NR										
Oils: Bay	20				NR										
Oils: Bone	20				NR										
Oils: Castor	20				S										
Oils: Cinnamon	20		R		NR										
Oils: Citric	20		R		S										

Chemical Resistance Chart

Chemical	Temperature °C	Concentration %	PP	PE	POM	PA	PET/PBT	PC	GR	PP + GF	PA + GF	PVDF	PSU	TEFLON	TPE
Oils: Clove	20		S												
Oils: Coconut	20		R		R										
Oils: Cod Liver	20		R		R										
Oils: Corn	20		R		R										
Oils: Cotton Seed	20		R												
Oils: Creosote	20		NR		NR										
Oils: Diesel Fuel (2D,3D,4D,5D)	20		R		NR										
Oils: Fuel (1,2,3,5A,5B,6)	20		S		NR										
Oils: Ginger	20				R										
Oils: Hydraulic Oil (Petro)	20				R										
Oils: Hydrailic Oil (Synthetic)	20														
Oils: Lemon	20		NR		NR										
Oils: Linseed	20		R		R										
Oils: Mineral	20		S		R										
Oils: Olive	20		R		R		R								
Oils: Olive	60						R								
Oils: Orange	20		R		NR										
Oils: Palm	20				R										
Oils: Paraffin	20						R								
Oils: Paraffin	60						R								
Oils: Peanut	20		Q		R										
Oils: Peppermint	20		Q		NR										
Oils: Pine	20				R										
Oils: Rapseed	20				R										
Oils: Rosin	20		R												
Oils: Sesame Seed	20				NR										
Oils: Silicone	20		R		R										
Oils: Soybean	20		R		R										
Oils: Sperm (whale)	20				NR										
Oils: Tanning	20				NR										
Oils: Transformer	20				S										
Oils: Turbine	20				R										
Oils:	20														
Oleic Acid	20		S	R	R	R	R								
Oleic Acid	60			Q											
Oleum	20	25	Q	Q	Q	NR	Q								
Oleum	60	25	NR	Q	NR	NR									
Oleum	20	100		NR	NR	NR									
Oleum	60	100		NR	NR	NR									
Olive	20					R									
Orange	20			R		R									
Oxalic Acid	20	10	R	R	S	Q	R	R					R		
Oxalic Acid	60	10	R	R	Q	NR									
Oxygen	20		R		R	S	R								
Ozone	20	100	Q	Q	Q	Q	Q	R					R		
Ozone	60	100		NR											
Ozone (1 ppm in water)	20		R	R	R	R	R								
Ozone (20 ppm in air)	20		S	S	S	Q	R								
P															
Iso Propyl Alcohol	20														
Paint Solvents	20				R	R	S								
Palamoll, Palatinol grades (BASF)	20				R	R	R								
Palatal resisn(BASF) (see Polyester resins)	20														
Palmitic Acid	20		S	R	R	R	R								
Paraffin Oil	20		R		R	R	R	R							

Chemical Resistance Chart

Chemical	Temperature °C	Concentration %	PP	PE	POM	PA	PET/PBT	PC	GR	PP + GF	PA + GF	PVDF	PSU	TEFLON	TPE
Paraffin Oil	60						R								
Pentane	20					S	R								
Peracetic acid	20					Q	Q								
Perchloric Acid Aq.	20	10	R	R	Q	NR	NR	NR							
Perchloric Acid Aq.	60	10	R	R	NR	NR	NR	NR							
Perchloric Acid Aq.	20	70	R	R	NR	NR	NR	NR							
Perchloric Acid Aq.	60	70	S	S	NR	NR	NR	NR							
Perchloroethylene (see Tetrachloroethylene)	20		NR		R	R	Q								
Perchloroethylene (see Tetrachloroethylene)	60		NR				NR								
Perfume (alcoholic)	20				R	R	R								
Perhydrol (see Hydrogen Peroxide)	20														
Petrol, Low-octane	20						R								
Petrol, Low-octane	60						R								
Petrol, High-octane	20						R								
Petrol, High-octane	60						R								
Petrol, Methanol 85/15	20						R								
Petrol, Methanol 85/16	60						R								
Petrolatum	20				S										
Petroleum	20		R	R	S	R	R	Q					R		
Petroleum ether, Petroleum solvents	20		S	Q	R	R	R	Q							
Petroleum ether, Petroleum solvents	60			NR				NR							
Phenol	20	10	R	Q	Q	NR	NR	S							
Phenol	60	10	S	Q	NR	NR	NR	NR							
Phenol (Carbolic Acid)	20	90		NR	NR										
Phenol (Carbolic Acid)	60	90		NR	NR										
Phenyl Ether	20					Q		Q							
Phenylethyl Alcohol	20					S									
Phosphat ester (see Hydrolic Fluids)	20														
Phosphate	20				R	R	R								
Phosphine	20				R	R	R								
Phosgene	20	100	S	S											
Phosphoric Acid Aq.	20	10	R	R	Q	Q	S	R					R		S
Phosphoric Acid Aq.	60	10	R	R	NR	Q	NR								
Phosphoric Acid Aq.	20	20	R	R	NR	Q	S								
Phosphoric Acid Aq.	60	20	R	R	NR	NR	NR								
Phosphoric Acid Aq.	20	85	R	R	NR	NR	Q	Q					R		
Phosphoric Acid Aq.	60	85	R	Q	NR	NR	NR	Q							
Phosphoric Anyhdride	20				NR	R									
Phosphorus Pentoxide	20	100	R	S	S										
Phosphorus Pentoxide	60	100													
Phosphorus Trichloride	20				NR										
Photographic developer	20		R	R	S	R	R								
Photographic developer	60		R	R	Q										
Photographic fixer	20			R	S	R	R								
Photographic fixer	60			R	Q										
Phthalic Acid Aq.	20		R	R	R	S	R								
Phthalic Anhydride	20				S	R									
Pickling Baths	20			R											
Pickling Baths	60			R											
Picric Acid	20				R	R									
Plastomoll	20				R	R	R								
Polyglycols, polyols	20				R	R	R								
Polyvinyl Acetate	20		R		R	R									
Potash (Potassium Carbonate)	20		R			R									
Potassium Bicarbonate	20		R	R	S	R		R							
Potassium Bicarbonate	60		R	R	Q	R		S							

Chemical Resistance Chart

Chemical	Temperature °C	Concentration %	PP	PE	POM	PA	PET/PBT	PC	GR	PP + GF	PA + GF	PVDF	PSU	TEFLON	TPE
Potassium bisulphite	20			R											
Potassium Borate	20	1	R	R											
Potassium Borate	60	1		R											
Potassium Bromate	20	10	R	R		R									
Potassium Bromate	60	10		R											
Potassium Bromide	20	10	R	R	R	Q	R								
Potassium Bromide	60	10	R	R	R	Q									
Potassium Carbonate	20		R	R		R	R								
Potassium Carbonate	60		R	R		R									
Potassium Chlorate	20		R	R	S	NR									
Potassium Chlorate	60		R	R	S	NR									
Potassium Chloride	20	10	R	R	R	S	R								
Potassium Chloride	60	10	R	R	R	S	R								
Potassium Chromate	20	40		R	Q										
Potassium Chromate	60	40		R	Q										
Potassium Cuprocyanide	20			R											
Potassium Cyanide	20		R	R	S	R		Q							
Potassium Cyanide	60		R	R	Q	R									
Potassium Dichromate	20	5	R	R	R	S	S	R							
Potassium Dichromate	60	5	R	R	R	Q	S								
Potassium Dichromate	20	10				S	S								
Potassium Dichromate	60	10				Q	S								
Potassium Dichromate	20	40		R		S	S								
Potassium Dichromate	60	40		R		Q	Q								
Potassium Ferricyanide	20			R	S	R									
Potassium Ferricyanide	60			R	S	R									
Potassium Fluoride	20			R											
Potassium Fluoride	60			R											
Potassium Hydroxide	20	1	R	R	S	S	Q	Q							
Potassium Hydroxide	60	1	R	R	R	S	NR								
Potassium Hydroxide	20	10	R	R	S	S	Q								
Potassium Hydroxide	60	10	R	R	S	S	NR								
Potassium Hydroxide	20	20	R	R	S										
Potassium Hydroxid	60	20	R	R	S										
Potassium Hydroxide	20	100		R	S		NR	NR							
Potassium Hydroxide	60	100		R	S		NR	NR							
Potassium Hypochloride	20			R											
Potassium Iodide	20														
Potassium Nitrate	20	10	R	R	R	S	R								
Potassium Nitrate	60	10	R	R	R	Q									
Potassium Oxalate	20														
Potassium Perborate	20			R											
Potassium Perborate	60			R											
Potassium Perchlorate	20	10		R		NR		R							
Potassium Perchlorate	60	10		R		NR									
Potassium Permanganate	20	1	R	R	R	Q	R	R							
Potassium Permanganate	20	10				NR	R								
Potassium Permanganate	60	10				NR	NR								
Potassium Permanganate	20	20	S	R	R	NR	S	R							
Potassium Permanganate	60	20	S	R	R	NR	NR	S							
Potassium Persulphate	20			R											
Potassium Persulphate	60			R											
Potassium Phosphate	20			R											
Potassium Sulphate	20		R	R	S	Q									
Potassium Sulphate	60		R	R	S	Q									
Potassium Suphide	20			R											

Chemical Resistance Chart

Chemical	Temperature °C	Concentration %	PP	PE	POM	PA	PET/PBT	PC	GR	PP + GF	PA + GF	PVDF	PSU	TEFLON	TPE
Potassium Suphide	60			R											
Potassium Sulfite	20			R											
Potassium Sulfite	60			R											
Potassium Thiocyanate	20					NR									
Potassium Thiosulphate	20			R											
Propane, Propene	20		Q		R	R	R	Q							
Propane, Propene	60		NR		R	R	R	NR							
Propanol	20				R	S	R	R							
Propargyl Alcohol	20			R											
Propargyl Alcohol	60			R											
Propyl	20		R			R									
Propyl Alcohol	20			R											
Propyl Alcohol	60			R											
Propionic acid	20	5	R		R	R	R	R							
Propylene Dichloride	20	100		NR											
Propylene Dichloride	60	100		NR											
Propylene Chloride	20			Q											
Propylene Glycol	20			R	S	S		Q							
Propylene Glycol	60			R	S	S		NR							
Protein solutions	20				R	R	R								
Pulp Slurries	20					R									
Pyridine	20		S		R	S									
Pyrocatechol	20					Q									
Pyrogallic Acid	20				NR	R									
Pyrrolidone	20					R									
Pyruvic acid	20				Q	S	R								
Q	20														
	20														
R															
Rayon Coagulating Bath	20			R											
Rayon Coagulating Bath	60			R											
Refrigerator oil	20				R	R	R								
Resorcinol	20				S	Q	Q	R							
Road salt	20				R	R	R								
Rosins	20		R		S										
Rum	20		R		R	R									
Rust Inhibitors	20		R		R										
S															
Salicylic Acid	20			R	Q	R	R								
Salad Dressing	20		R		R	R									
Salt Brine	20														
Sea Water	20		R	R	R	R									R
Sea Water	60		R	R	R										
Selenic Acid	20			R											
Selenic Acid	60			R											
Shellac (Bleached)	20		R		R	R									
Shellac (Orange)	20		R		R	R									
Shortening	20			R											
Shortening	60			R											
Silane	20					R	R								
Silicic Acid	20			R											
Silicic Acid	60			R											
Silicone Fluids	20		R	S		R									

Chemical Resistance Chart

Chemical	Temperature °C	Concentration %	PP	PE	POM	PA	PET/PBT	PC	GR	PP + GF	PA + GF	PVDF	PSU	TEFLON	TPE
Silicone oils	20		R	S	R	R	R	R							
Silver Bromide	20				Q										
Silver Cyanide	20			R											
Silver Nitrate	20		R	R	Q	R	R	S							
Silver Nitrate	60		R	R	NR										
Soap Solutions	20	10	R	R	R	R	R								R
Soap Solutions	60	50		R			NR								
Soda solution	20	10			R	R	R								R
Soda Ash (see Sodium Carbonate)	20		R												
Sodium Acetate Aq.	20		R	R	S	R									
Sodium Acetate Aq.	60			R											
Sodium Acid Sulphate (see Sodium Bisulphate)	20														
Sodium Aluminate	20			R	S	R									
Sodium Antimonate	20			R											
Sodium Benzoate	20	35	R	R											
Sodium Benzoate	60	35		R											
Sodium Bicarbonate Aq.	20		R	R	R	R									
Sodium Bicarbonate Aq.	60		R	R	R	R									
Sodium Bisulphate	20		R	R	S	Q									
Sodium Bisulphate	60		R	R	S	Q									
Sodium Bisulphite	20		R	R	Q	NR	R								
Sodium Bisulphite	60		R	R	Q	NR	R								
Sodium Borate (Borax)	20			R		R									
Sodium Borate (Borax)	60			R		R									
Sodium Bromide	20	10		R	R	S									
Sodium Bromide	60	10		R	R										
Sodium Carbonate	20	10	R	R	R	S	R								
Sodium Carbonate	60	10	R	R	R	S	R								
Sodium Chlorate	20	10	R	R	R	R	R								
Sodium Chlorate	60	10	R	R	R	R									
Sodium Chloride	20	10	R	R	R	S	R	R							
Sodium Chloride	60	10	R	R	R	Q	R								
Sodium Chromate	20		R		NR	R									
Sodium Chromate	60		R		NR										
Sodium Cyanide	20		R	R	R	S	R								
Sodium Cyanide	60		R	R	R	Q									
Sodium Dichromate	20			R		R	S								
Sodium Dichromate	60			R											
Sodium Dodecylbenzenesulfonate	20				R	R	R								
Sodium Ferricyanide	20			R											
Sodium Ferricyanide	60			R											
Sodium Ferrocyanide	20			R	R										
Sodium Ferrocyanide	60			R	R										
Sodium Fluoride	20			R		R									
Sodium Fluoride	60			R		R									
Sodium Hydrogen carbonate	20	10	R		R	R	R								
Sodium hydrogen Sulfate	20	10				R	R								
Sodium Hydrogen Sulfit	20	10			Q	R	R								
Sodium Hydroslufite	20														
Sodium Hydroxide	20	10	R	R	R	S	Q	Q							
Sodium Hydroxide	60	10	R	R	Q	NR	Q	Q							
Sodium Hydroxide	20	50	R	R	S	Q	Q	Q							
Sodium Hydroxide	60	50	R	R	Q										
Sodium Hydroxide	20	80	R	R	NR										
Sodium Hydroxide	60	80	R	R	NR										
Sodium Hypochlorite Chlorine Bleach	20	10	R	R	S	S	S	Q							

Chemical Resistance Chart

Chemical	Temperature °C	Concentration %	PP	PE	POM	PA	PET/PBT	PC	GR	PP + GF	PA + GF	PVDF	PSU	TEFLON	TPE
Sodium Hypochlorite Chlorine Bleach	60	10	R	R	Q	Q		Q							
Sodium Hypochlorite Chlorine Bleach	20	100	Q		NR	Q									
Sodium Hypochlorite Chlorine Bleach	60	100	NR		NR	NR									
Sodium hypophosphite	20	10			R	R	R								
Sodium Hyposulfate	20														
Sodium Lauryl Sulfate	20	30			R	R									
Sodium Lignosulfonate	20				R	R	R								
Sodium Metaphosphate	20		NR	R	S	R									
Sodium Metaphosphate	60		NR		S										
Sodium Metasilicate	20				NR										
Sodium Metasilicate	60				NR										
Sodium Nitrate	20		R	R	R	R									
Sodium Nitrate	60		R	R	R	R									
Sodium Nitrilotriacetate	20	10			R	R	R								
Sodium Oleate	20				R	R	R								
Sodium Pentachlorophenolate	20					R									
Sodium Perborate	20	3	R	R	R	R									
Sodium Perborate	60		R	R	R	R									
Sodium Peroxide	20			R	NR	NR									
Sodium Peroxide	60				NR	NR									
Sodium Polyphosphate	20				S										
Sodium Polyphosphate	60				S										
Sodium Phosphate	20		R	R											
Sodium Pyrosulfite	20	10				R									
Sodium Salt solution	20	10			R	R	R								
Sodium Silicate	20		R	R	S	R									
Sodium Silicate	60		R		Q										
Sodium Sulphate	20		R	R	S	R		S							
Sodium Sulphate	60		R	R	S										
Sodium Sulphide	20	25	R	R	S	R									
Sodium Sulphide	60	25	R	R	S	R									
Sodium Sulphide	20	100		R		R									
Sodium Sulphide	60	100		R		R									
Sodium Sulphite	20		R	R		NR									
Sodium Sulphite	60			R											
Sodium Tetraborate	20				S										
Sodium Tetraborate	60				S										
Sodium Thiosulphate	20		R	R	Q	R									
Sodium Thiosulphate	60		R		Q										
Soft soap	20			R											
Soil	20				R	R	R								
Soil Burial	20					R									
Soldering Fluid	20				Q	Q	R								
Sorghum	20				R	R									
Sorghum	60				R										
Soy Sauce	20				R	R									
Stannic Chloride Aq.	20		R	R	Q	R									
Stannic Chloride Aq.	60		R	R	Q	R									
Stannic Fluoborate	20				Q										
Stannic Fluoborate	60				Q										
Stannous Chloride	20			R		NR									
Stannous Chloride	60			R		NR									
Starch Solution	20		R	R	R	R									
Starch Solution	60			R	R	R									
Steam	20			R	S	Q									
Steanc Acid	20	100		R											

Chemical Resistance Chart

Chemical	Temperature °C	Concentration %	PP	PE	POM	PA	PET/PBT	PC	GR	PP + GF	PA + GF	PVDF	PSU	TEFLON	TPE
Steanc Acid	60	100		R											
Stearic Acid	20	100	S	R	R	R	R								
Stearic Acid	60	100	NR	R	R										
Stoddard Solvent	20		NR		R	R									
Styrene (Monomer)	20		S	S	R	R	R	S					R		
Sucrose	20			R											
Sugar (Liquids)	20		R	R	R	R									
Sulfamic Acid	20	20	R		NR	NR									
Sulfate Liquors	20		R		NR										
Sulfolane (Tetramethylenesulfone)	20				R	R	R								
Sulfonates (eg. Alkyl aryl Sulfonate)	20				R	R	R								
Sulfochromic acid	20	50	Q												R
Sulphur Chloride	20		S	R	NR	NR	R								
Sulphur Dioxide	20		NR		Q	S									
Sulphur Dioxide (Dry Gas)	20		R	R	Q	Q	R								
Sulphur Hexafluoride	20														
Sulphur Hexafluoride	60														
Sulphur Trioxide	20			R	NR	NR									
Sulphur Trioxide	60				NR										
Sulphuric Acid Aq.	20	2	R	R	S	Q	R	R							
Sulphuric Acid Aq.	60	2	R	R	S	Q									
Sulphuric Acid Aq.	20	10				NR	R								
Sulphuric Acid Aq.	60	10				NR	Q								
Sulphuric Acid Aq.	20	50	R	R	Q	NR	Q	S							
Sulphuric Acid Aq.	60	50	R	R	NR	NR	NR	Q							
Sulphuric Acid Aq.	20	80	S	S	NR	NR	Q	Q							
Sulphuric Acid Aq.	60	80	S	Q	NR	NR	NR	Q							
Sulphuric Acid Aq.	20	96	S	S	NR	NR	NR	Q							
Sulphuric Acid Aq.	60	96	Q	NR	NR	NR	NR	Q							
Sulphuric Acid Fuming	20			NR											
Sulphuric Acid Fuming	60			NR											
Sulphurous Acid Aq.	20	10	R	R	S	Q	R	Q							
Sulphurous Acid Aq.	20	30	R	S	Q	NR									
Sulphuryl Chloride	20		Q		R										
Surface Active Agents (Emulsifiers, Synthetic Detergents)	20			R											
Syrup	20		R												
Sweat (DIN 54020)	20				R	R	R								
T															
Tall Oil	20				R	R	R								
Tallow	20			R	R	R	R								
Tallow	60			S											
Tannic Acid	20	10	R	R	R	S	R								
Tannic Acid	60	10	R	R	S	Q									
Tanning Extracts	20			R	B										
Tanning Extracts	60			R											
Tanning Liquors	20		R												
Tar	20														
Tartaric Acid	20		R	R	S	R	R	R							
Tetrachloroethylene	20		S		R	S	S								Q
Tetrachloroethylene	60				R										
Tetrachloroethane	20		R		R	R									
Tetrachloroethane	60		R		R										
Tetrachlorometgane	20														
Tetrafluoromethane	20				S	R	R								
Tetraflurorpropanol	20					Q									

Chemical Resistance Chart

Chemical	Temperature °C	Concentration %	PP	PE	POM	PA	PET/PBT	PC	GR	PP + GF	PA + GF	PVDF	PSU	TEFLON	TPE
Tetrahydrofuran	20		S	Q	S	R	Q	Q							
Tetrahydrofuran	60		Q	NR	S		NR	NR							
Tetralin	20		Q	S	R	R	R	Q					R		
Tetrehydronaphtalene	20														
Tin	20				R	S	R								
Titanium Trichloride	20			Q											
Titanium Tetrachloride	20			Q											
Titanium Tetrachloride	60			NR											
Thionyl Chloride	20			Q		NR		NR							
Toluene	20		S	NR	S	R	Q	Q							S
Toluene	60		Q	NR	Q		NR	NR							
Tomato Juice	20		R		S										
Transformer Oil	20			Q		R	R								S
Transformer Oil	60			NR			R								
Tributyl Phosphate	20		R		R	R									
Trichlorbenzene	20														
Trichlorethylene	20	100	Q	Q	Q	Q									
Trichlorethane	20				R										
Trichloroacetic Acid	20		R		NR	NR	NR	Q							
Trichloroacetic Acid	60				NR	NR	NR	NR							
Trichloroethanol	20					Q	Q								
Trichloroethylene	20		Q	Q	Q	Q	Q	NR					NR		Q
Trichloroethylene	60			NR	NR	Q	NR	NR							
Trichloroethyl Phosphate	20					NR									
Trichloropropane	20				R										
Trichloropropane	60				R										
Tricklorotrifluoroethane	20				R	R	R								
Tricresylphosphate (see Tritolyl Phosphate)	20		R		S			Q							
Tricresylphosphate (see Tritolyl Phosphate)	60				Q										
Triethylamine	20				NR										
Triethylamine	60				NR										
Triethanolamine	20		R		R	R	R								
Trilon A, B (BASF)	20	10			R	R	R								
Trimethylamine	20				R	R									
Tri-p-creyl Phosphate	20				R	R	R								
Trisodium Phosphate Aq.	20			R	R										
Trisodium Phosphate Aq.	60			R	R										
Tritolyl Phosphate	20														
Turpentine oil	20		Q	NR	R	R	R	Q							
Turpentine oil	60		Q		R			NR							
Turpentine Substitute (white spirit)	20		Q		R	R	R	R							
U															
Uranium Fluoride	20				Q	Q	Q								
Urea	20		R	R	R	R	R	NR							
Urea	60			R	R	R		NR							
Uric acid	20				R	R	R								
Uric acid	60														
Urine	20		R	R	R	R	R	R							
Urine	60		R	R	R	R	R	R							
V															
Vanilla Extract	20			R				R							
Varnish	20		R		R										
Varnish	60		R		R										
Vaseline	20		R		R	R	R								

Chemical Resistance Chart

Chemical	Temperature °C	Concentration %	PP	PE	POM	PA	PET/PBT	PC	GR	PP + GF	PA + GF	PVDF	PSU	TEFLON	TPE
Vegetable Oils	20			S			R	R							
Vegetable Oils	60						R								
Vegetable Juice	20				R	R									
Vinegar	20		R	R	S	S	R								
Vinegar	60		R	R	Q	S									
Vinyl Acetat	20	100	R												
Vinyl Chloride	20		S		R	S	R								
W															
Water	20		R	R	R	R	R	R							R
Water	60		R	R	R	R	S	R							
Wax (Molten)	20				R	R	R								
WC Cleaner	20				Q	S	R								
Weed Killers	20				R	R									
Wetting Agants	20			R											
Wetting Agants	60			R											
Whey	20				R										
White Liquor (Pulp Mill)	20		R		NR										
White Water (Paper Mill)	20		R		S										
Wines and Spirits	20		R	R	R	R	R								
X															
Xylene	20	100	Q	Q	R	R	S	Q							
Xylene	60	100	NR	NR	R		NR	NR							
Xylenol	20				R	R	Q								
Y															
Yeast	20			R	R	R	R								
Z															
Zinc	20				R	R	R								
Zinc Carbamate	20					R									
Zinc Chloride Aq.	20		R	R	Q	NR	R								
Zinc Chloride Aq.	60		R	R	NR	NR									
Zinc Oxide	20			R											
Zinc Halides	20					NR									
Zinc Hydrosulphite	20				Q										
Zinc Hydrosulphite	60				NR										
Zinc Sulphate	20		R	R	Q	R									
Zinc Sulphate	60		R	R	NR										
Zinc Thiocyanate, Bromide, Iodide, Nitrate	20					Q	R								

Technical Data Sheet for Belt & Chain Applications | Metric

Company/Customer:
Contact person:
End user:

Technical Data

1. Industry:							
2. Application:							
3. Product type:							
4. Wrapping/Container:	☐ None	☐ Plastic containers	☐ Cardboard	☐ Shrink wrapped	☐ Flow pack	☐ Wood	
☐ Plastic trays	☐ Steel trays	☐ Glass	☐ Steel cans	☐ Alu cans	☐ Cross strapped	☐ Other:	
5. Item size (mm) L:	xW:	xH	or Ø:	xH:	Other:		
6. Product weight:	kg/item	kg/m	kg/m²				
7. Throughput:	items/min.	kg/min.	Speed	m/min.			
8. Length of conveyor C-C:	m	Length of belt/chain:	m	Width of belt:	m		
9. Start/stop operation:	☐ No (continuous drive)	☐ Yes, no. of stops per hour	☐ Product indexing				
10. Accumulation:	☐ No	☐ Full	☐ Partly length of accumulation:				
11. Min./max. operating temp.:	°C /	°C					
12. Is the conveyor lubricated?	☐ Yes, type:	☐ No					
13. Is the belt/chain exposed to any chemicals during operation?	☐ Yes, type:	☐ No					
14. Is the belt/chain exposed to any chemicals during cleaning?	☐ Yes, type:	☐ No					
15. Conveyor type:	☐ Belt or	☐ Chain	☐ Single row	☐ Parallel rows	No. of rows:		
16. Layout (birdseye)	☐ Straight running	☐ Sideflexing					
17. Horizontal layout	☐ Straight	☐ Incline	☐ Decline- If in-/decline angle to horizontal:	°			
18. ☐ New conveyor	☐ Retrofit	Original belt/chain from:					
19. Belt type:	or chain type:						
20. Belt or chain pitch:	Belt or chain color:						
21. Belt or chain material:	☐ POM	☐ PP	☐ PE	☐ PA	☐ Hardened steel	☐ Stainless steel	☐ Other:
22. Pin material:	☐ Plastic	☐ PP	☐ PE	☐ PA	☐ Hardened steel	☐ Stainless steel	☐ Other:
23. Pin retention system:							

Technical Data Sheet for Belt/Chain Applications

24. Top accessories:		Spacing in travel direction:		Indent:	
25. Side accessories:			Indent from side:		
26. Bottom tabs (belt): Spacing in travel direction:			No of rows:	Position:	
27: Wearstrip material:	☐ SS	☐ PE HD 1000	☐ PE HD500	☐ Other	
28: Sprockets : Drive end:	Pitch diameter:		No. of teeth z=	per shaft	pcs
Idler end:	Pitch diameter:		No. of teeth z= (0 if non)	per shaft	pcs
29. Sprocket bore: Drive end:	☐ ● ☐ ● + keyway		☐ ■ dimension		
30. Form filled in by:			Date:		
31. Sketch of conveyor, stating travel direction and drive motor location					

Additional Data

Technical Data Sheet for Belt & Chain Applications | Imperial

Company/Customer:
Contact person:
End user:

Technical Data

1. Industry:
2. Application:
3. Product type:
4. Wrapping/Container: ☐ None ☐ Plastic containers ☐ Cardboard ☐ Shrink wrapped ☐ Flow pack ☐ Wood
☐ Plastic trays ☐ Steel trays ☐ Glass ☐ Steel cans ☐ Alu cans ☐ Cross strapped ☐ Other:
5. Item size (in.) L: xW: xH or Ø: xH: Other:
6. Product weight: lb/item lb/ft lb/ft²
7. Throughput: items/min. lb/min. Speed ft/min.
8. Length of conveyor C-C: ft Length of belt/chain: ft Width of belt: ft
9. Start/stop operation: ☐ No (continuous drive) ☐ Yes, no. of stops per hour ☐ Product indexing
10. Accumulation: ☐ No ☐ Full ☐ Partly length of accumulation:
11. Min./max. operating temp.: °F / °F
12. Is the conveyor lubricated? ☐ Yes, type: ☐ No
13. Is the belt/chain exposed to any chemicals during operation? ☐ Yes, type: ☐ No
14. Is the belt/chain exposed to any chemicals during cleaning? ☐ Yes, type: ☐ No
15. Conveyor type: ☐ Belt or ☐ Chain ☐ Single row ☐ Parallel rows No. of rows:
16. Layout (birdseye) ☐ Straight running ☐ Sideflexing
17. Horizontal layout ☐ Straight ☐ Incline ☐ Decline- If in-/decline angle to horizontal: °
18. ☐ New conveyor ☐ Retrofit Original belt/chain from:
19. Belt type: or chain type:
20. Belt or chain pitch: Belt or chain color:
21. Belt or chain material: ☐ POM ☐ PP ☐ PE ☐ PA ☐ Hardened steel ☐ Stainless steel ☐ Other:
22. Pin material: ☐ Plastic ☐ PP ☐ PE ☐ PA ☐ Hardened steel ☐ Stainless steel ☐ Other:
23. Pin retention system:

Technical Data Sheet for Belt/Chain Applications

24. Top accessories:		Spacing in travel direction:		Indent:	
25. Side accessories:			Indent from side:		
26. Bottom tabs (belt): Spacing in travel direction:			No of rows:	Position:	
27: Wearstrip material:	☐ SS	☐ PE HD 1000	☐ PE HD500	☐ Other	
28: Sprockets : Drive end:	Pitch diameter:		No. of teeth z=	per shaft	pcs
Idler end:	Pitch diameter:		No. of teeth z= (0 if non)	per shaft	pcs
29. Sprocket bore: Drive end:	☐ ● ☐ ●	+ keyway	☐ ■	dimension	
30. Form filled in by:			Date:		
31. Sketch of conveyor, stating travel direction and drive motor location					

Additional Data

Local Contacts

Austria
T +43 171728 133
sales@ammeraalbeltech.de
www.ammeraalbeltech.at

Belgium
T +32 2 466 0300
salesgb@ammeraalbeltech.be
www.ammeraalbeltech.be

Canada
T +1 905 890 1311
info@ammeraalbeltech.ca
www.ammeraalbeltech.com

Chile
T +56 233 12900
ventas@ammeraalbeltech.cl
www.ammeraalbeltech.cl

China
T +86 21 5280 6810
info@ammeraalbeltech.com.cn
www.ammeraalbeltech.com.cn

Czech Republic
T +420 567 117 211
prodej@ammeraalbeltech.cz
www.ammeraalbeltech.cz

Denmark
T + 45 75 72 31 00
admin@unichains.com
www.unichains.com

Finland
T +358 207 911 400
info@ammeraalbeltech.fi
www.ammeraalbeltech.fi

France
T +33 3 20 90 36 00
client@ammeraalbeltech.fr
www.ammeraalbeltech.fr

Germany
T +49 4152 937-0
sales@ammeraalbeltech.de
www.ammeraalbeltech.de

Hungary
T +36 30 311 6099
info@ammeraalbeltech.hu
www.ammeraalbeltech.hu

India
T +91 44 265 34 244
info@ammeraalbeltech.net.in
www.ammeraalbeltech.com

Italy
T +39 051 660 60 06
info@ammeraalbeltech.it
www.ammeraalbeltech.it

Luxembourg
T +352 26 48 38 56
sales@ammeraal-beltech.lu
www.ammeraal-beltech.lu

Malaysia
T +60 3 806 188 49
sales.kl@ammeraalbeltech.my
www.ammeraalbeltech.com

Netherlands
T +31 72 57 51212
infonl@ammeraalbeltech.com
www.ammeraalbeltech.nl

Poland
T +48 32 44 77 179
biuro@ammeraalbeltech.com
www.ammeraalbeltech.com

Portugal
T +351 22 947 94 40
geral@ammeraalbeltech.pt
www.ammeraalbeltech.pt

Singapore
T +65 62739767
sales@ammeraalbeltech.sg
www.ammeraalbeltech.com

Slovakia
T +421 2 55648541-2
predaj@ammeraalbeltech.sk
www.ammeraalbeltech.sk

South Korea
T +82 31 448 3613-7
amel@ammeraalbeltech.co.kr
www.ammeraalbeltech.co.kr

Spain
T +34 93 718 3054
ventas@ammeraalbeltech.es
www.ammeraalbeltech.es

Sweden
T +46 44 780 3010
info@ammeraalbeltech.se
www.ammeraalbeltech.se

Switzerland
T +41 55 2253 535
info@ammeraalbeltech.ch
www.ammeraalbeltech.ch

Thailand
T +66 2 902 2604-13
sales@ammeraalbeltech.th.com
www.ammeraalbeltech.com

United Kingdom
T +44 1992 500550
sales@ammeraalbeltech.co.uk
www.ammeraalbeltech.co.uk

United States
T +1 847 673 6720
info@ammeraalbeltechusa.com
www.ammeraalbeltech.com

Vietnam
T +84 8 376 562 05
info@ammeraalbeltech.com.vn
www.ammeraalbeltech.com.vn

Global Headquarters:

Ammeraal Beltech Holding B.V.
P.O. Box 38
1700 AA Heerhugowaard
The Netherlands

T +31 72 575 1212
F +31 72 571 6455

info@ammeraalbeltech.com
www.ammeraalbeltech.com

Expert advice, quality solutions and local service for all your belting needs

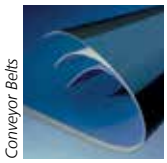
Conveyor Belts

Timing Belts

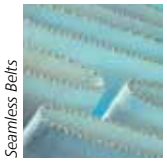
Seamless Belts

Transmission Belts

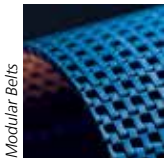
Modular Belts

Fabrication & service

... and 150 service contacts more on www.ammeraalbeltech.com

Date: 08.2015