US 20080057894A1

(19) United States

(12) Patent Application Publication

(10) Pub. No.: US 2008/0057894 A1

(43) Pub. Date: Mar. 6, 2008

Aleksic et al.

(54) PORTABLE DEVICE WITH PRIORITY BASED POWER SAVINGS CONTROL AND METHOD THEREOF

(75) Inventors: **Milivoje Aleksic**, Richmond Hill (CA); **Aris Balatsos**, Toronto (CA); **Kevin O'Neil**, Toronto (CA); **James L. Esliger**, Richmond Hill (CA); **Bruce Plotnick**, Furlong, PA (US)

Correspondence Address:
ADVANCED MICRO DEVICES, INC.
C/O VEDDER PRICE KAUFMAN & KAMMHOLZ, P.C.
222 N.LASALLE STREET
CHICAGO, IL 60601

(73) Assignee: **ATI Technologies Inc.**, Markham (CA)

(21) Appl. No.: **11/469,141**

(22) Filed: **Aug. 31, 2006**

Publication Classification

(51) **Int. Cl.**
H04B 1/18 (2006.01)

(52) **U.S. Cl.** **455/187.1**

(57) **ABSTRACT**

A portable device includes a controller that is responsive to a remaining power capacity of the battery, and a power consumption level of the portable device and based on user prioritized functional processing capability features, dynamically controls functional processing capability features of the device. The controller provides power for a higher priority feature at the expense of a lower priority functional processing capability feature consistent with the user prioritized functional processing capability features. A wireless portable device is also disclosed that includes a wireless signal strength determinator that determines a received signal strength of the wireless device and a controller that adjusts the functional processing capability feature of the wireless device based on the determined received signal strength and based on battery capacity information. In this way, received signal strength information is used as a further input to determine how to best adjust functional processing capability features of the device.

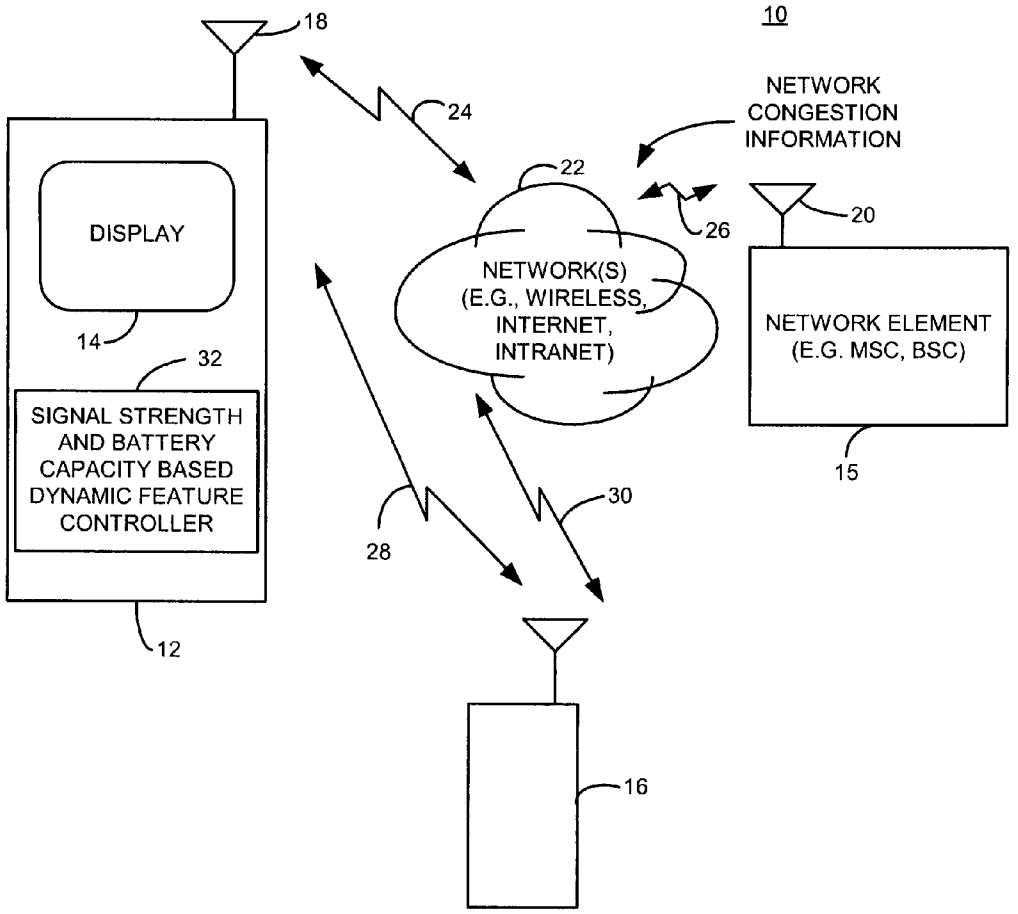

MOTOROLA-LENOVO EXHIBIT 1014

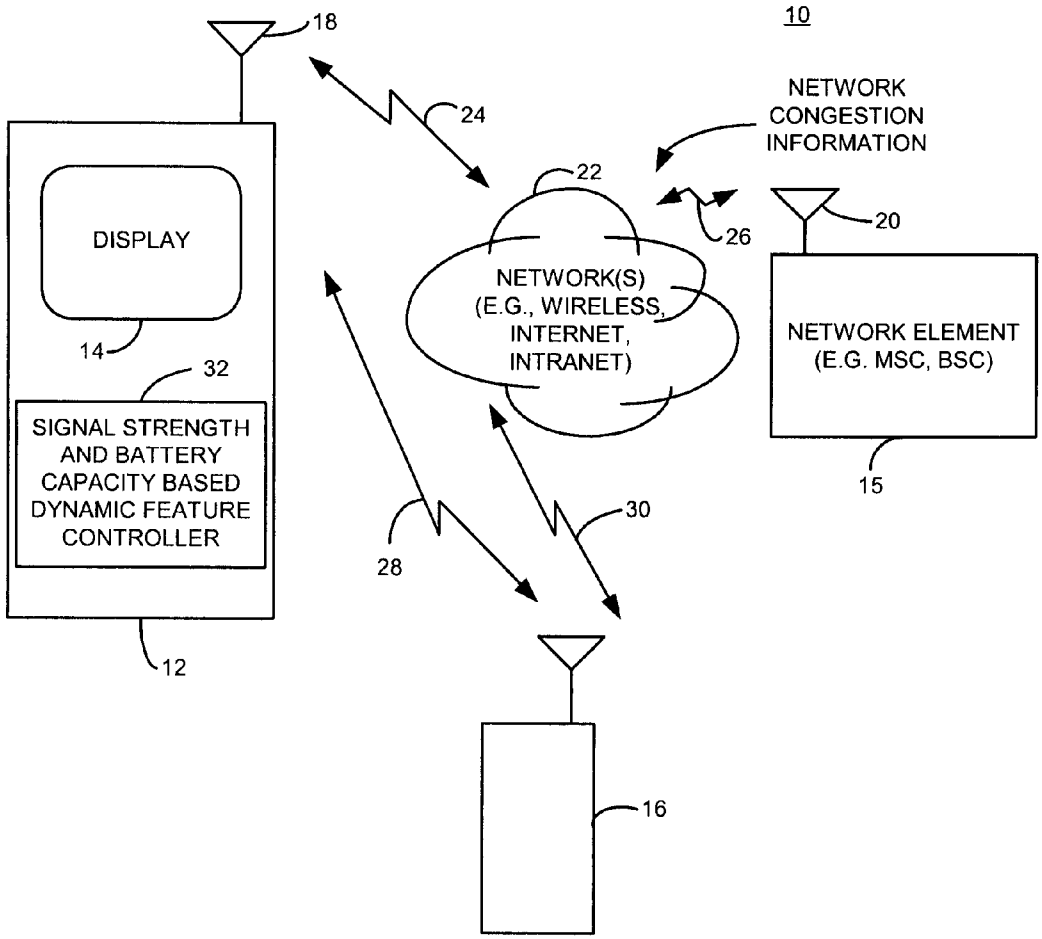
10
18
24
NETWORK
CONGESTION
INFORMATION
22
26
20
DISPLAY
NETWORK(S)
(E.G., WIRELESS,
INTERNET,
INTRANET)
NETWORK ELEMENT
(E.G. MSC, BSC)
14
32
SIGNAL STRENGTH
AND BATTERY
CAPACITY BASED
DYNAMIC FEATURE
CONTROLLER
15
30
28
12
16

FIG. 1

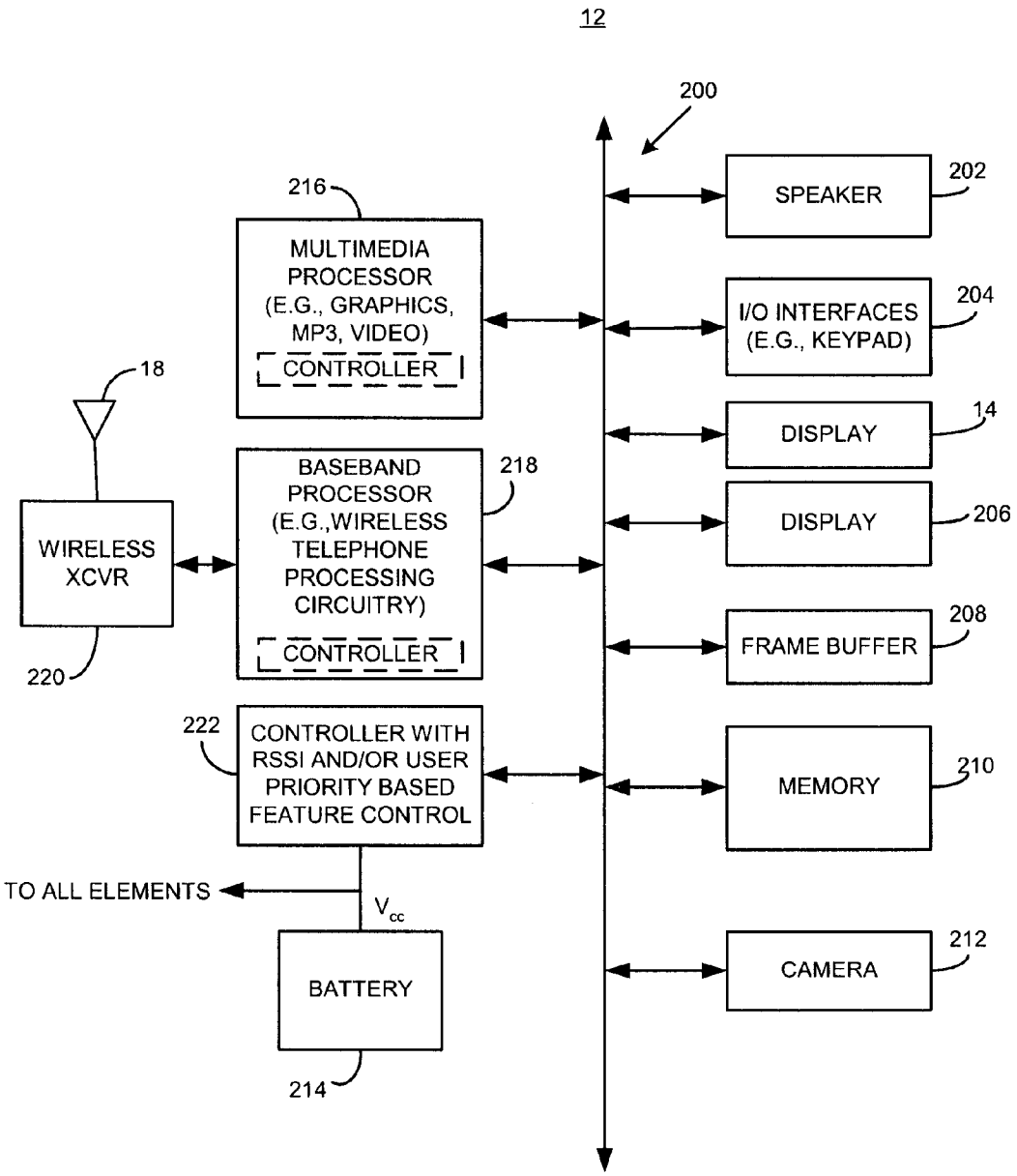
12
200
216
MULTIMEDIA PROCESSOR (E.G., GRAPHICS, MP3, VIDEO)
CONTROLLER
SPEAKER
202
I/O INTERFACES (E.G., KEYPAD)
204
18
DISPLAY
14
BASEBAND PROCESSOR (E.G.,WIRELESS TELEPHONE PROCESSING CIRCUITRY)
CONTROLLER
218
DISPLAY
206
WIRELESS XCVR
220
FRAME BUFFER
208
222
CONTROLLER WITH RSSI AND/OR USER PRIORITY BASED FEATURE CONTROL
MEMORY
210
TO ALL ELEMENTS
V_{cc}
BATTERY
214
CAMERA
212

FIG. 2

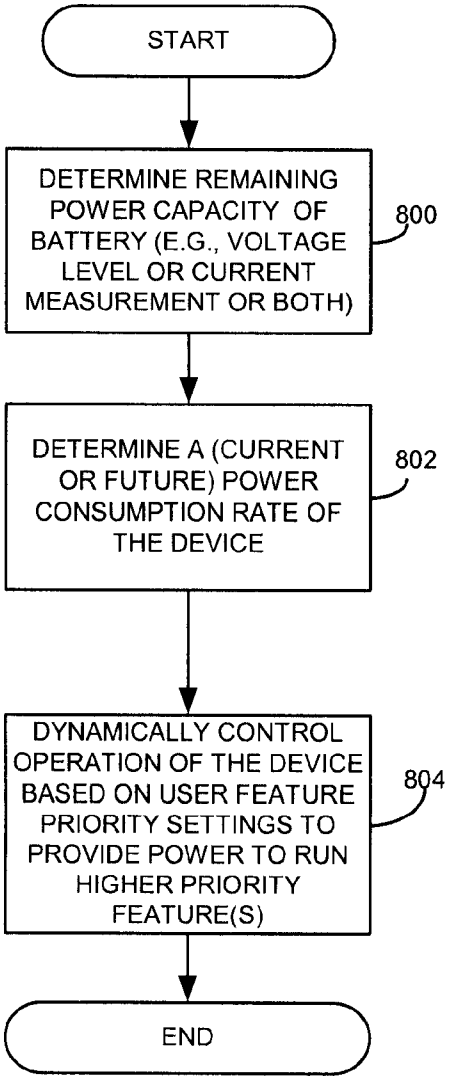
START
DETERMINE REMAINING POWER CAPACITY OF BATTERY (E.G., VOLTAGE LEVEL OR CURRENT MEASUREMENT OR BOTH)
800
DETERMINE A (CURRENT OR FUTURE) POWER CONSUMPTION RATE OF THE DEVICE
802
DYNAMICALLY CONTROL OPERATION OF THE DEVICE BASED ON USER FEATURE PRIORITY SETTINGS TO PROVIDE POWER TO RUN HIGHER PRIORITY FEATURE(S)
804
END

FIG. 8

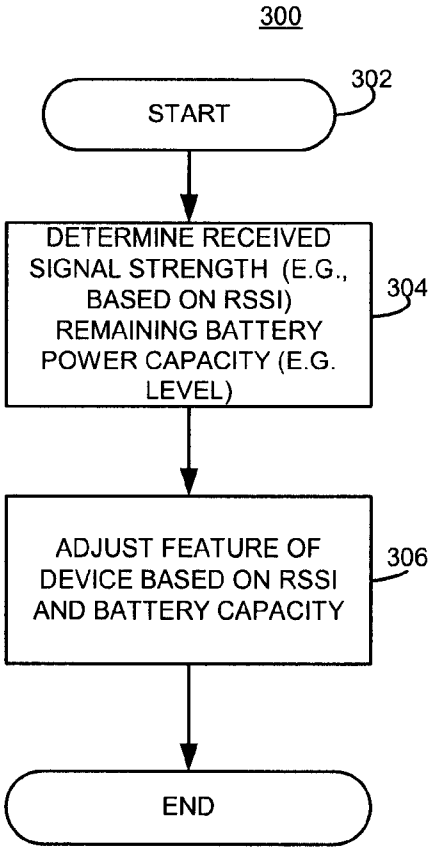
300
START
302
DETERMINE RECEIVED SIGNAL STRENGTH (E.G., BASED ON RSSI) REMAINING BATTERY POWER CAPACITY (E.G. LEVEL)
304
ADJUST FEATURE OF DEVICE BASED ON RSSI AND BATTERY CAPACITY
306
END

FIG. 3

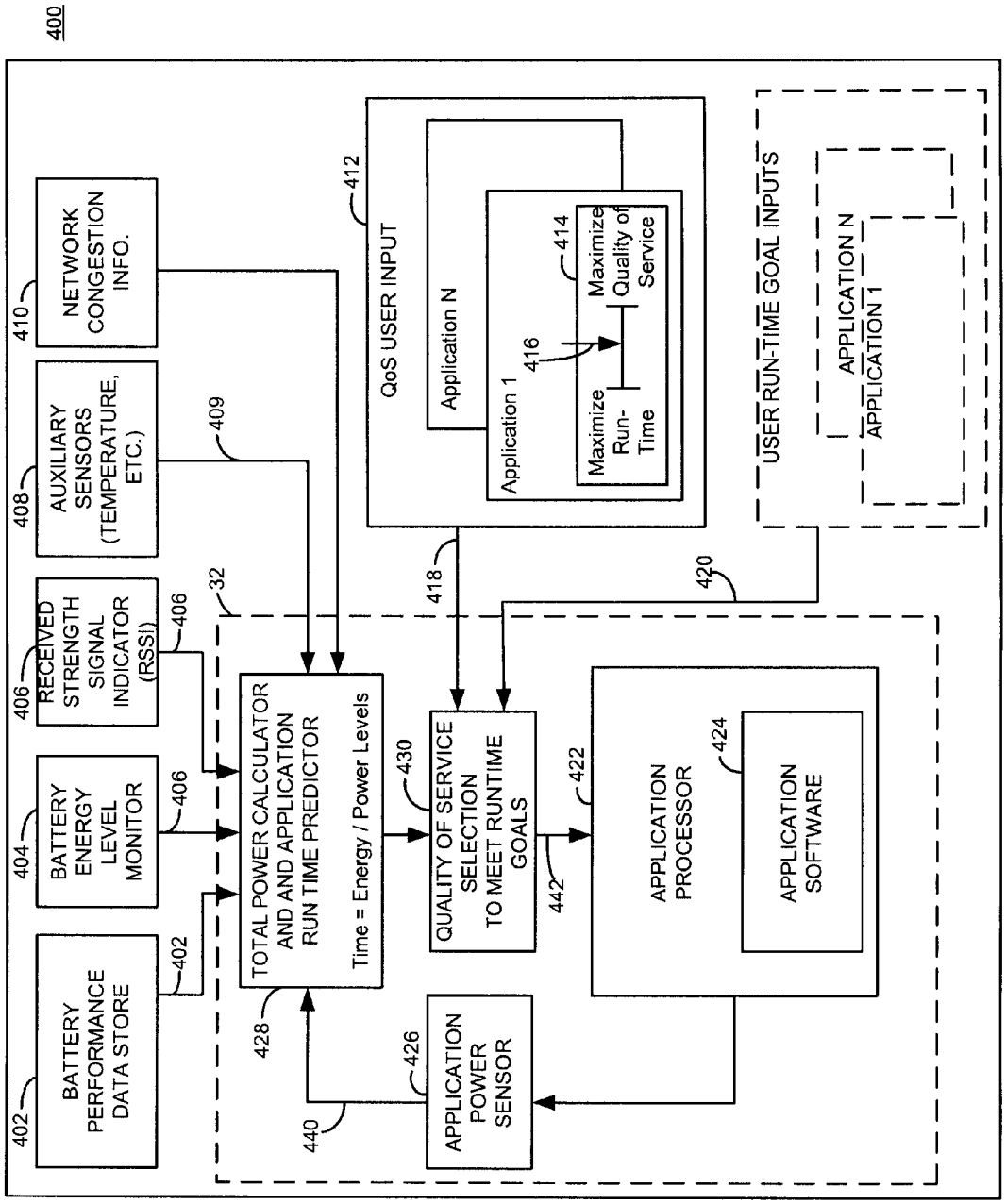
400
402
BATTERY PERFORMANCE DATA STORE
404
BATTERY ENERGY LEVEL MONITOR
406
RECEIVED STRENGTH SIGNAL INDICATOR (RSSI)
408
AUXILIARY SENSORS (TEMPERATURE, ETC.)
410
NETWORK CONGESTION INFO.
402
406
406
409
32
TOTAL POWER CALCULATOR AND AND APPLICATION RUN TIME PREDICTOR
Time = Energy / Power Levels
428
440
426
APPLICATION POWER SENSOR
430
QUALITY OF SERVICE SELECTION TO MEET RUNTIME GOALS
442
422
APPLICATION PROCESSOR
424
APPLICATION SOFTWARE
412
QoS USER INPUT
Application N
Application 1
416
414
Maximize Quality of Service
Maximize Run-Time
418
420
USER RUN-TIME GOAL INPUTS
APPLICATION N
APPLICATION 1

FIG. 4

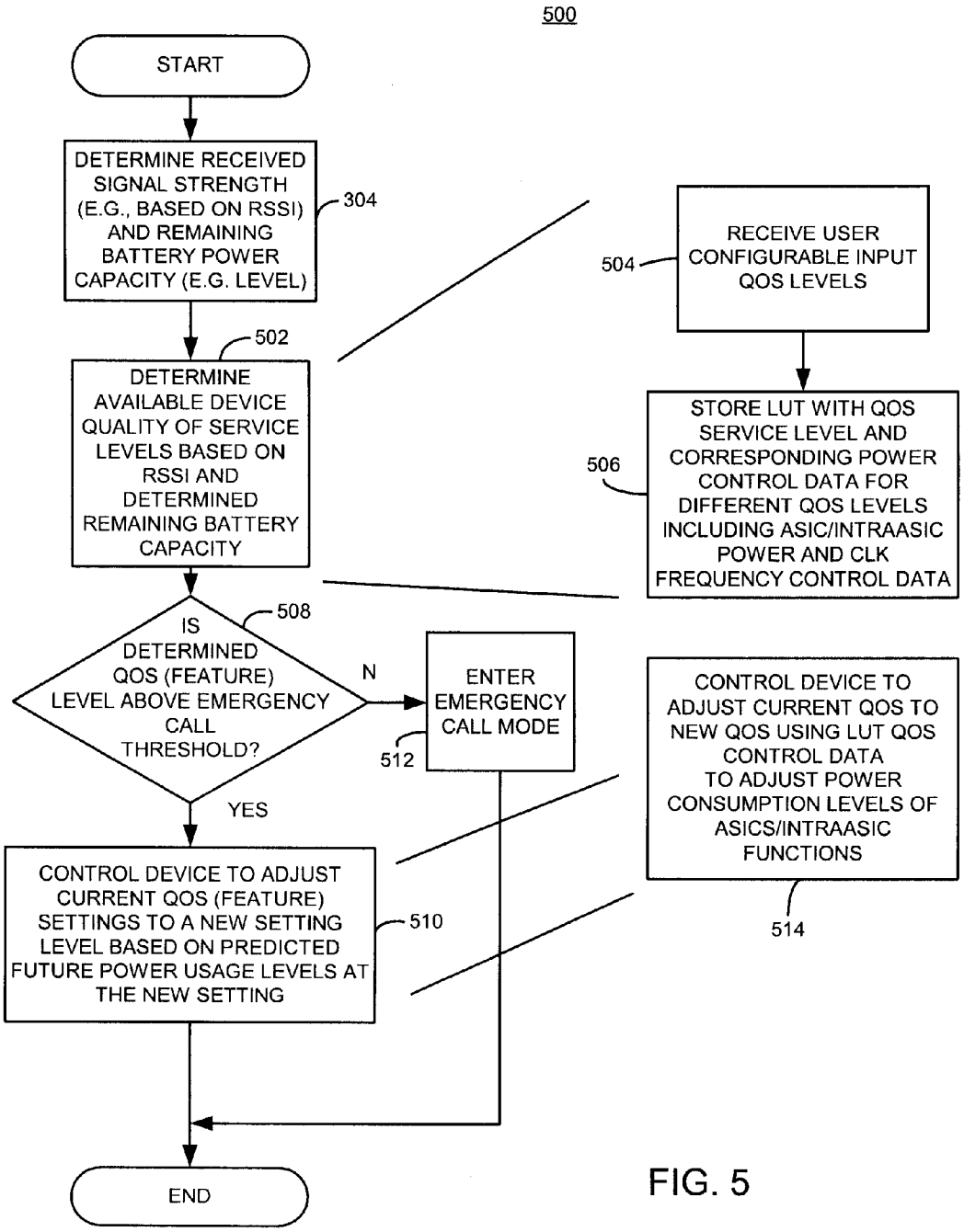
500
START
DETERMINE RECEIVED SIGNAL STRENGTH (E.G., BASED ON RSSI) AND REMAINING BATTERY POWER CAPACITY (E.G. LEVEL)
304
502
DETERMINE AVAILABLE DEVICE QUALITY OF SERVICE LEVELS BASED ON RSSI AND DETERMINED REMAINING BATTERY CAPACITY
RECEIVE USER CONFIGURABLE INPUT QOS LEVELS
504
STORE LUT WITH QOS SERVICE LEVEL AND CORRESPONDING POWER CONTROL DATA FOR DIFFERENT QOS LEVELS INCLUDING ASIC/INTRAASIC POWER AND CLK FREQUENCY CONTROL DATA
506
508
IS DETERMINED QOS (FEATURE) LEVEL ABOVE EMERGENCY CALL THRESHOLD?
N
ENTER EMERGENCY CALL MODE
512
YES
CONTROL DEVICE TO ADJUST CURRENT QOS (FEATURE) SETTINGS TO A NEW SETTING LEVEL BASED ON PREDICTED FUTURE POWER USAGE LEVELS AT THE NEW SETTING
510
CONTROL DEVICE TO ADJUST CURRENT QOS TO NEW QOS USING LUT QOS CONTROL DATA TO ADJUST POWER CONSUMPTION LEVELS OF ASICS/INTRAASIC FUNCTIONS
514
END

FIG. 5

	RSSI	BATTERY CAPACITY	NETWORK CONGESTION	NEW QOS
600 →	HIGH	HIGH	LOW	APP1 HIGHEST QOS
602 →	HIGH	LOW	LOW	APP2 LOW QOS
	LOW	LOW	LOW	APP3 LOW
				APPN

FIG. 6

QOS SETTINGS - AS BATTERY LEVEL DROPS, RUN APPS THAT ARE NOT LOWEST PRIORITY		
1002 → PRIORITY	DEVICE FUNCTION	USER SETTING ← 1000
5	VOICE (PHONE)	10MIN ← 1004
3	DIGITAL AUDIO PLAYER	10MIN (OR VOLUME LEVEL)
2	VIDEO (E.G.CAMERA)	RESOLUTION SETTING
4	EMAIL	1MBYTE
1	GAMES	FRAMES/SEC OR RESOLUTION SETTING

FIG. 10

APPLICATION POWER LEVEL ADJUSTMENT ALGORITHM

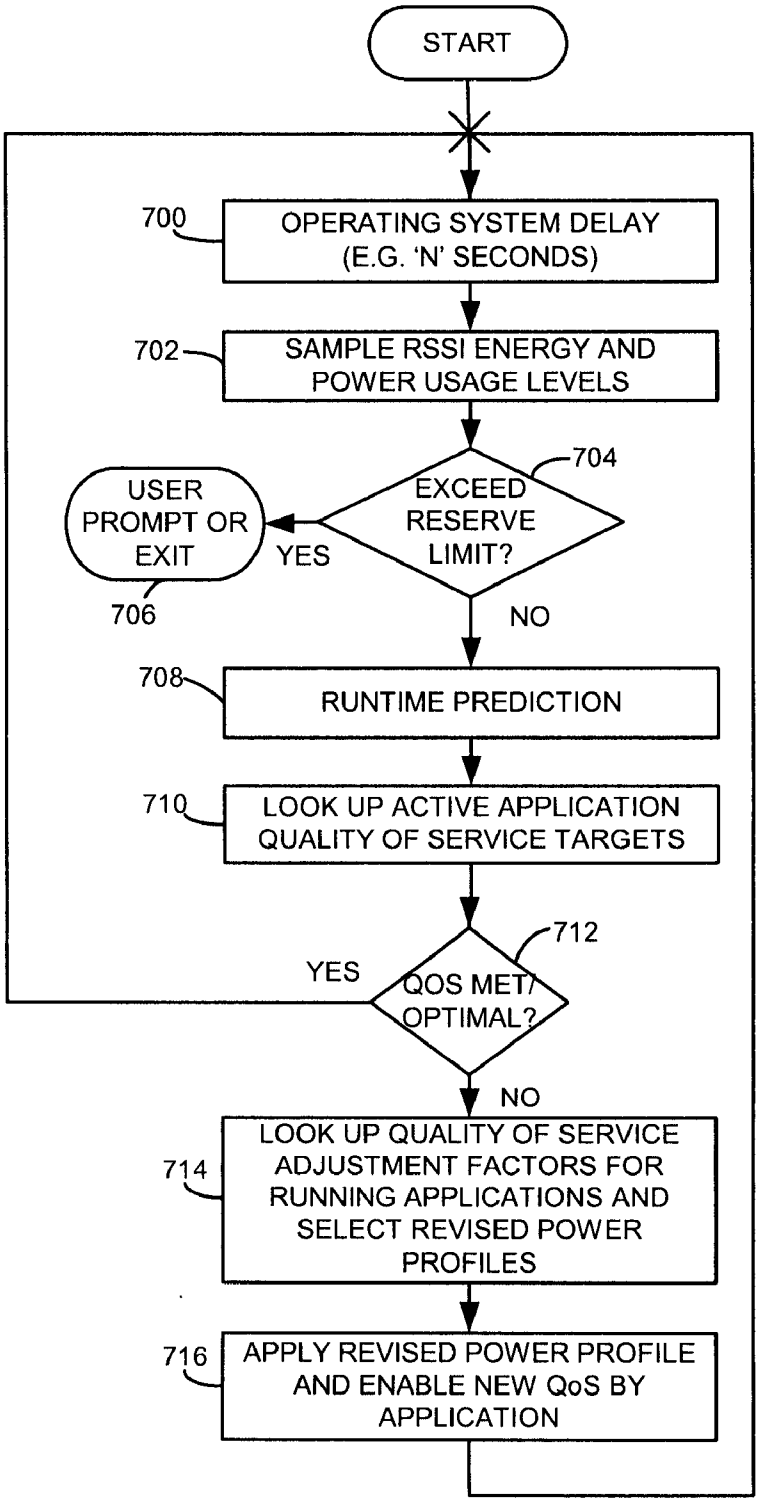

FIG. 7

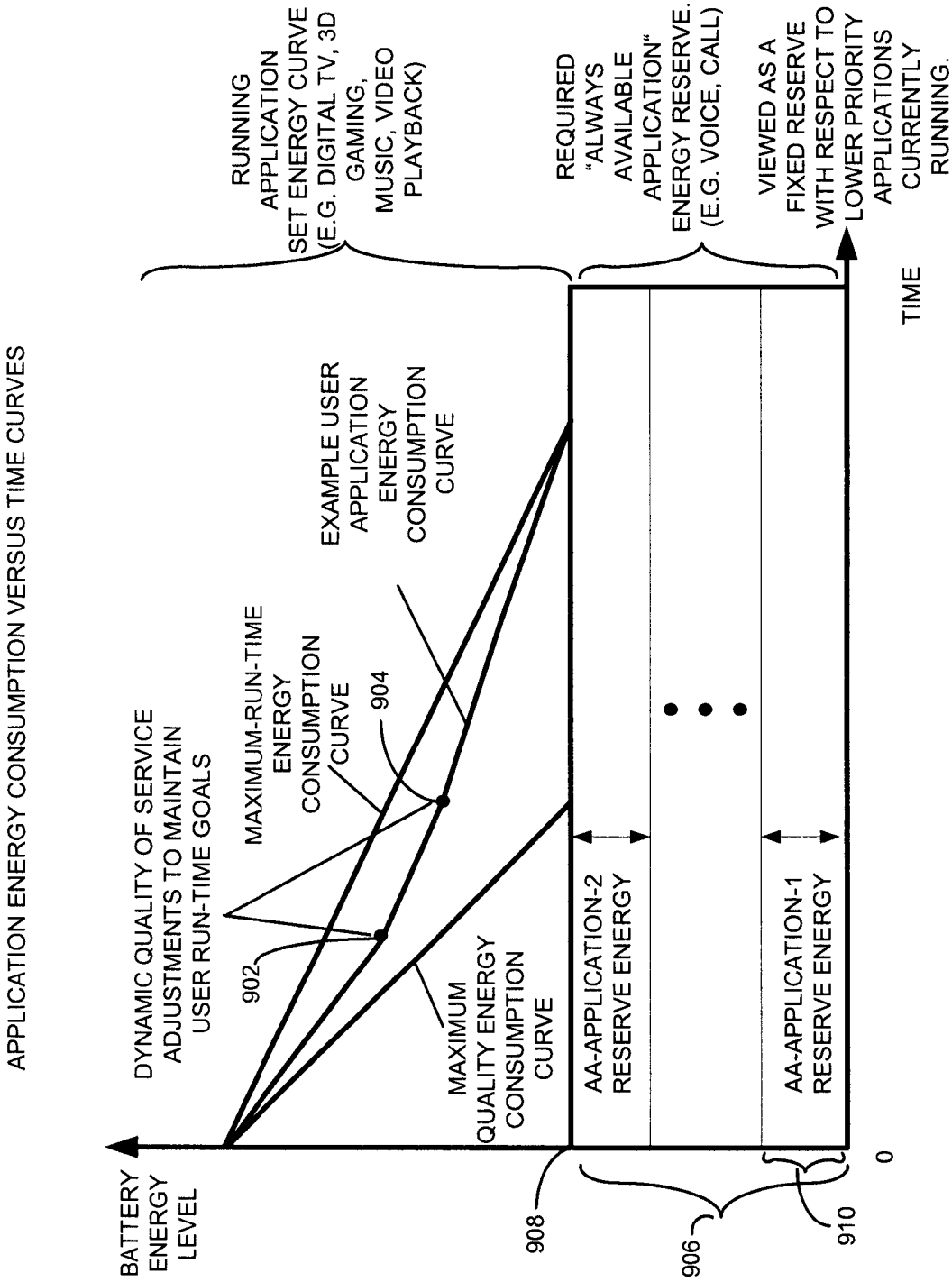
APPLICATION ENERGY CONSUMPTION VERSUS TIME CURVES
BATTERY ENERGY LEVEL
DYNAMIC QUALITY OF SERVICE ADJUSTMENTS TO MAINTAIN USER RUN-TIME GOALS
902
MAXIMUM-RUN-TIME ENERGY CONSUMPTION CURVE
904
EXAMPLE USER APPLICATION ENERGY CONSUMPTION CURVE
MAXIMUM QUALITY ENERGY CONSUMPTION CURVE
908
906
910
AA-APPLICATION-2 RESERVE ENERGY
AA-APPLICATION-1 RESERVE ENERGY
RUNNING APPLICATION SET ENERGY CURVE (E.G. DIGITAL TV, 3D GAMING, MUSIC, VIDEO PLAYBACK)
REQUIRED "ALWAYS AVAILABLE APPLICATION" ENERGY RESERVE. (E.G. VOICE, CALL)
VIEWED AS A FIXED RESERVE WITH RESPECT TO LOWER PRIORITY APPLICATIONS CURRENTLY RUNNING.
0
TIME

FIG. 9

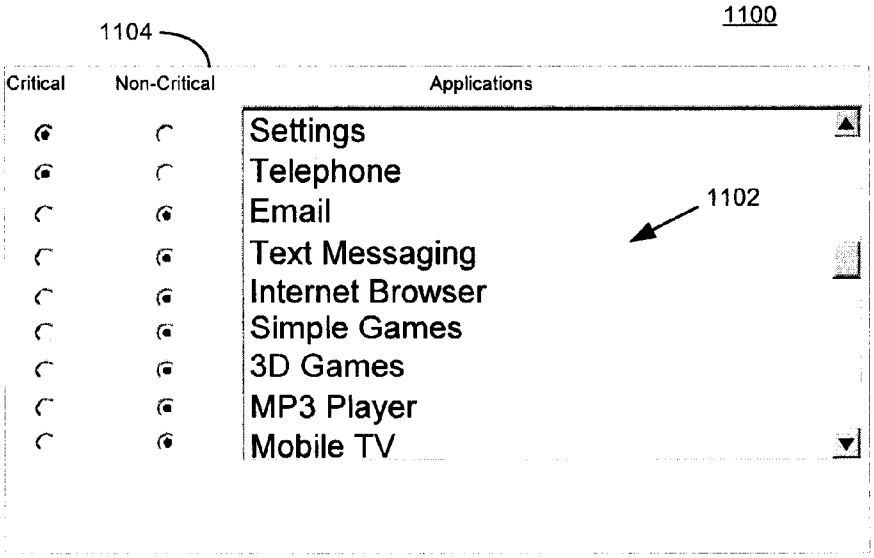
1100
1104
Critical
Non-Critical
Applications
Settings
Telephone
Email
Text Messaging
Internet Browser
Simple Games
3D Games
MP3 Player
Mobile TV
1102

FIG. 11

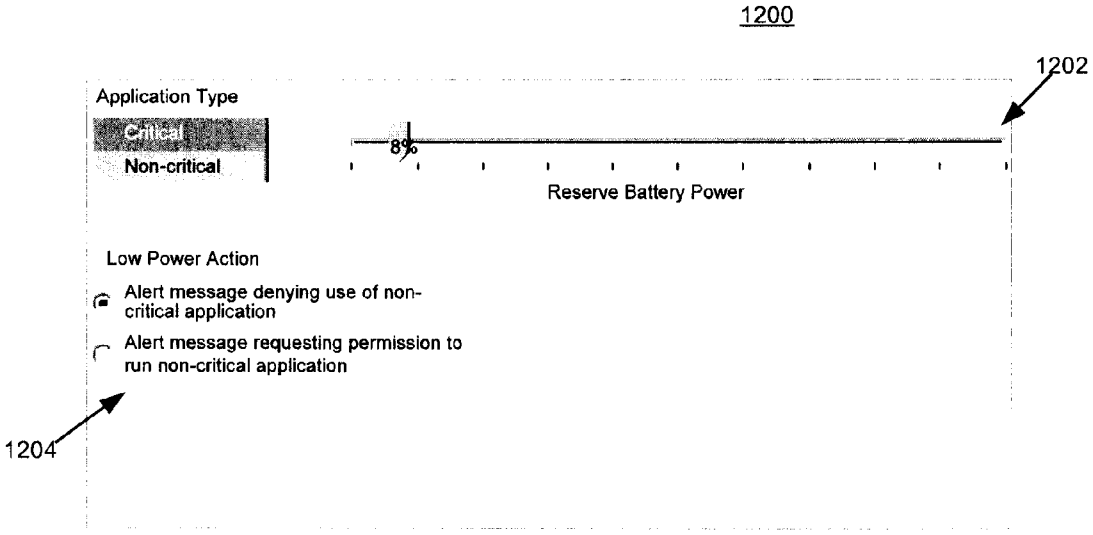
1200
1202
Application Type
Critical
Non-critical
8%
Reserve Battery Power
Low Power Action
Alert message denying use of non-critical application
Alert message requesting permission to run non-critical application
1204

FIG. 12

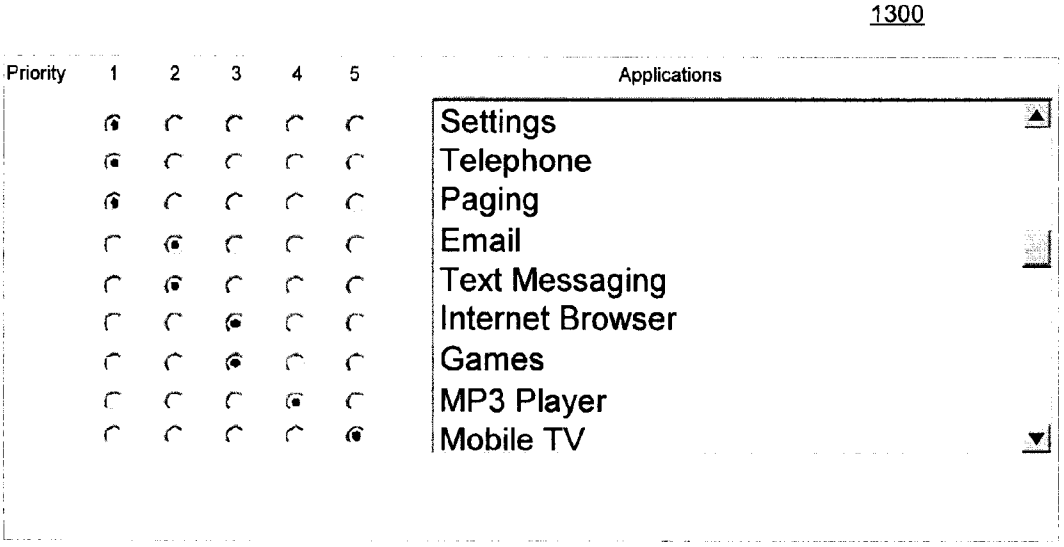
1300
Priority
1
2
3
4
5
Applications
Settings
Telephone
Paging
Email
Text Messaging
Internet Browser
Games
MP3 Player
Mobile TV

FIG. 13

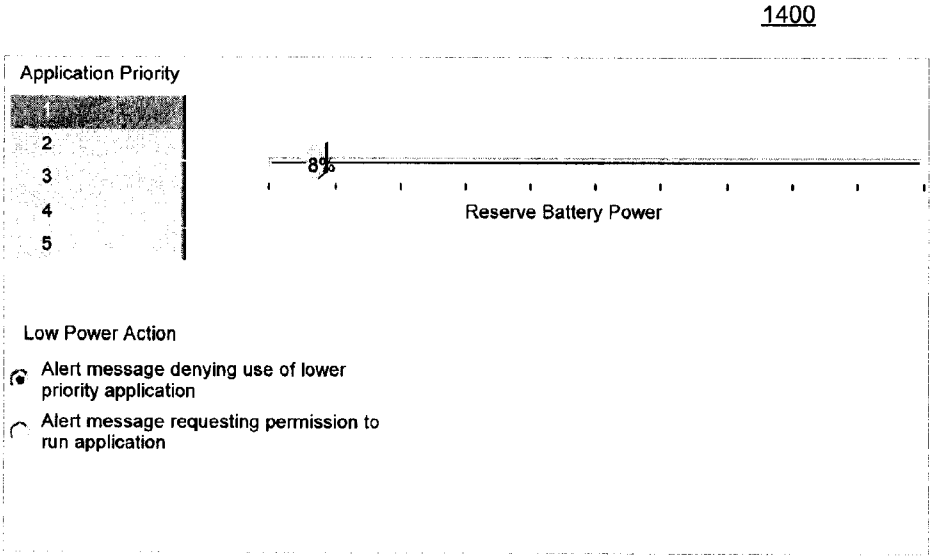
1400
Application Priority
1
2
3
4
5
8%
Reserve Battery Power
Low Power Action
Alert message denying use of lower priority application
Alert message requesting permission to run application

FIG. 14

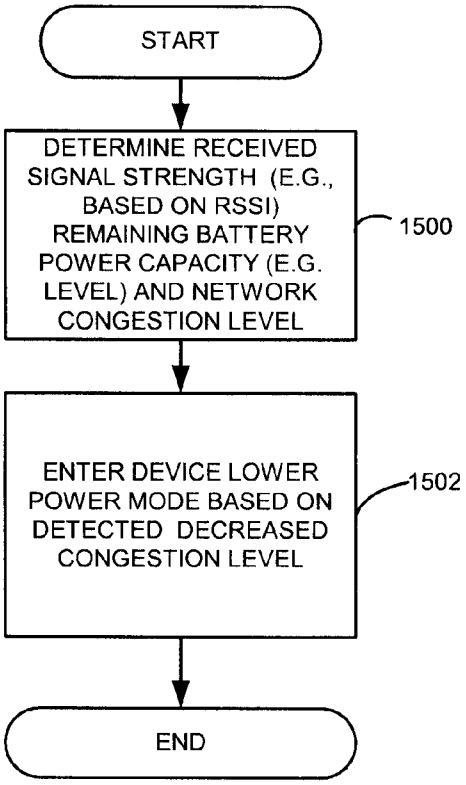
START
DETERMINE RECEIVED SIGNAL STRENGTH (E.G., BASED ON RSSI) REMAINING BATTERY POWER CAPACITY (E.G. LEVEL) AND NETWORK CONGESTION LEVEL
1500
ENTER DEVICE LOWER POWER MODE BASED ON DETECTED DECREASED CONGESTION LEVEL
1502
END

FIG. 15

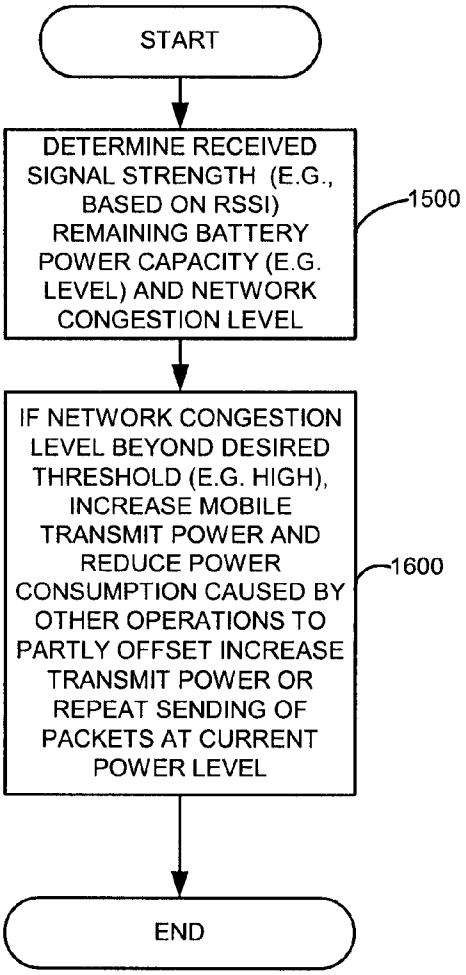
START
DETERMINE RECEIVED SIGNAL STRENGTH (E.G., BASED ON RSSI) REMAINING BATTERY POWER CAPACITY (E.G. LEVEL) AND NETWORK CONGESTION LEVEL
1500
IF NETWORK CONGESTION LEVEL BEYOND DESIRED THRESHOLD (E.G. HIGH), INCREASE MOBILE TRANSMIT POWER AND REDUCE POWER CONSUMPTION CAUSED BY OTHER OPERATIONS TO PARTLY OFFSET INCREASE TRANSMIT POWER OR REPEAT SENDING OF PACKETS AT CURRENT POWER LEVEL
1600
END

FIG. 16

PORTABLE DEVICE WITH PRIORITY BASED POWER SAVINGS CONTROL AND METHOD THEREOF

FIELD OF THE DISCLOSURE

[0001] The disclosure relates generally to devices having batteries, and more particularly to battery powered devices that employ power saving management operations.

BACKGROUND OF THE DISCLOSURE

[0002] Portable devices, such as digital audio and/or video players, cell phones, cameras, camcorders, or any other suitable portable devices, have limited battery capacity. In the case of a wireless cell phone device, the device can also operate in environments with differing network signal strengths. When the capacity of a battery drops below a threshold, known portable devices can operate in a low battery condition and reduce power consumption such as by, for example, dimming displays. In addition, low battery power modes can result in the shutting down of certain features of the device at varying levels of operation. For example, integrated circuits are known to go into low power states when a battery level has reached a low battery threshold level. Clock frequencies to certain functional blocks within the integrated circuit or the entire integrated circuit may be put in a low power mode. This may be carried out, for example, by varying clock frequencies to various circuits and lowering supply voltages to various internal circuits to an integrated circuit, such as an application specific integrated circuit, general purpose processor, baseband processor or any other circuit as desired. However, users are typically most concerned with the amount of play time of a digital audio or video playing device or the talk time remaining of a cell phone for the ability to use the portable device for at least an emergency call. However, in areas with low network signal strength, it may take more units of battery capacity per unit of talk time to provide suitable communication levels. Accordingly, having functional blocks or circuits "power down" in a low battery level condition may be too late when the wireless telephone is in a low signal strength environment since there may not be enough battery capacity to transmit at a high enough level with a base station or other wireless device.

[0003] In addition, portable devices are known that have many different software applications and features, such as the ability to play games, play digital media, have cameras, camcorder functionality, email applications, voice communication capabilities, and other features. However, each feature can consume differing amounts of power and may have a different metric that is important for the given application or feature. For example, when playing a game on a portable device, the amount of time to play the game may be an important metric to a user and for digital audio playing device, the amount of time that a song(s) can be listened to may be an important metric, the amount of talk time may be important for a voice communication feature in a cell phone and the number or size of emails that can be received may be relevant for an email feature. Known devices may allow a user to set a threshold of remaining battery capacity so that when the battery capacity reaches the minimum level set, certain power reduction operations take place in an effort to save battery power. However, some users may be more concerned with the available features and less concerned with the battery condition.

[0004] Therefore, a need exists for an improved power management operation in portable devices and/or portable wireless devices.

BRIEF DESCRIPTION OF THE DRAWINGS

[0005] The invention will be more readily understood in view of the following description when accompanied by the figures below and wherein like reference numerals represent like elements:

[0006] FIG. **1** is a block diagram illustrating one example of a system employing a wireless portable device in accordance with one embodiment of the invention;

[0007] FIG. **2** is a block diagram illustrating one example of a portable device in accordance with one embodiment of the invention;

[0008] FIG. **3** is a flowchart illustrating one example of a method for dynamically controlling a functional processing capability feature of a portable device in accordance with one embodiment of the invention;

[0009] FIG. **4** is a block diagram illustrating one example of a portion of a portable device in accordance with one embodiment of the invention;

[0010] FIG. **5** is a flowchart illustrating one example of a method for dynamically controlling a functional processing capability feature of a portable device in accordance with one embodiment of the invention;

[0011] FIG. **6** is a block diagram illustrating data used to provide a new functional processing capability feature level, such as a new quality of service level in accordance with one embodiment of the invention;

[0012] FIG. **7** is a table illustrating examples of quality of service settings based on priority definitions in accordance with one embodiment of the invention;

[0013] FIG. **8** is a flowchart illustrating one example of an application power level adjustment scheme in accordance with one embodiment of the invention;

[0014] FIG. **9** is a diagram illustrating maximum quality energy consumption curves and maximum runtime energy consumption curves;

[0015] FIG. **10** is a flowchart illustrating one example of a method for dynamically controlling a functional processing capability feature of a portable device in accordance with one embodiment of the invention;

[0016] FIG. **11** diagrammatically illustrates one example of a user interface in accordance with one embodiment of the invention;

[0017] FIG. **12** diagrammatically illustrates one example of a user interface in accordance with one embodiment of the invention;

[0018] FIG. **13** diagrammatically illustrates one example of a user interface in accordance with one embodiment of the invention;

[0019] FIG. **14** diagrammatically illustrates one example of a user interface in accordance with one embodiment of the invention;

[0020] FIG. **15** is a block diagram illustrating one example of a method for controlling power consumption of a portable device in accordance with one embodiment of the invention; and

[0021] FIG. **16** is a block diagram illustrating one example of a method for controlling power consumption of a portable device in accordance with one embodiment of the invention.

DETAILED DESCRIPTION OF THE DISCLOSURE

[0022] Briefly, in one embodiment, a portable device includes a controller that dynamically controls functional processing capability features of the device to provide power for a higher priority feature at the expense of a lower priority functional processing capability feature consistent with the data representing user prioritized functional processing capability features. The controller dynamically controls functional processing capabilities based on a remaining power capacity of a battery, and a power consumption level of the portable device and the user prioritized functional processing capability features. As such, a user can prioritize which functional processing capability features of the portable device take priority over others and the controller will take into account the battery capacity and power consumption rate and provide the highest priority feature in view of this information.

[0023] For example, based on a user's desired need for a specific amount of talk time if, for example, the user has prioritized the voice feature of the device, the controller calculates the power consumption that would be used by the voice feature based on the assessment, and the controller turns those features off as required to meet the talk time level set by the user. The controlling of the features may also take into account, for example, received signal strength indication (RSSI) if desired, or other information if desired. Stored control data, such as a lookup table that indicates which parametric settings can be controlled for the device may be employed to suitably turn on and off features or otherwise adjust functional processing capability features of the device to provide power for the higher priority feature at the expense of a lower priority functional processing capability feature.

[0024] In one example, a wireless portable device is also disclosed that includes a wireless signal strength determinator that determines a received signal strength of the wireless device and a controller that adjusts the functional processing capability feature of the wireless device based on the determined received signal strength and based on battery capacity information. Received signal strength is typically a quality metric for a communication "channel". However, as used herein it can refer to any type of quality metric of any channel that may be applicable to a wireless device, such as a "voice-recognition channel" with varying levels of power usage dependent on ambient noise levels, or a "data storage channel" where different streams may consume more or less power depending on the data rate that must be output to the channel, and based on the fragmentation state of the media. In this way, received signal strength information is used as a further input to determine how to best adjust functional processing capability features of the device. If desired, the portable device can also take into account network congestion information and adjust functional processing capability feature of the portable device based on the received signal strength, battery capacity information and network congestion information. A controller may be operative to determine an amount of power that will be used during the use of a given feature and the controller may also enter an emergency call mode prior to an out-of-power condition, to preserve power for an emergency call in the instance where the portable device employs cell phone technology, for example. As such, the controller may be operative to determine an amount of power that will be used to provide a functional processing capability feature and to reduce processing capability features to preserve power for an emergency call.

[0025] In addition, if desired, the portable device may also determine a power usage rate of the device based on current operational conditions of the device and predict an amount of time that an application can continue to run, such as a game, or any other suitable application, based on the power usage rate. The portable device may determine whether a desired application quality of service level can be maintained for a desired application run-time length and if so, adjust power consumption of the device or adjust a quality of service level provided by the application, in an attempt to meet the desired application run-time. This may include shutting down the application to maintain a minimum battery power energy reserve so that the device may be used for emergency purposes or to run other higher priority applications. Quality of service of an application may include, for example, the image resolution level that is output by the application to a display for a game or for outputting video at a certain rate from a suitable video source such as memory or any other suitable aspect. As such, the application may continue to run, but may be controlled so that the processor executing the application and/or circuits used by the application output information at a different quality level as experienced, for example, by a user.

[0026] FIG. **1** illustrates one example of a system **10** that employs a portable device **12**, in this case a wireless portable device, that communicates through suitable network communications with one or more network elements **14** and other portable devices **16**, if desired. For purposes of illustration only and not limitation, the system will be described as a wireless communication system, such as a wireless cellular communication system that can communicate with web servers, if desired, but may be any other suitable communication network or combination of communication networks as desired. In addition, the portable device **12** will be described, in this example, as a wireless portable device such as, but not limited to, a wireless cell phone with any suitable features, a wireless digital audio and/or video player, a laptop computing device, an email communication device, or any other suitable portable device that utilizes, for example, a battery. For purposes of illustration only, the portable device **12** will be described herein as a cell phone having suitable features such as voice communication features using known cell phone communication circuits, camera features, digital audio storage and playback features, video storage and playback features, email features, and any other suitable features as desired.

[0027] As shown, the portable device **12** includes a display **14** and an antenna **18** for wirelessly communicating with the wireless network element **15**, such as a base station, base site controller, or any other suitable network element. The network element **15** may be, for example, a server or group of servers that, as known in the art, employ one or more processors and associated memory and any suitable interfaces or circuits to communicate the information described herein. Although the network element **15** is shown as having an antenna **20** it will be understood that the network element **15** may be a group of elements that communicate with one another and that the antenna **20** may

be part of a base station, for example, and another part of the network element **15** may be a server or circuit in operative communication with the base station where the base station can wirelessly communicate information as described herein. The portable device **12** communicates with a network **22** via a wireless communication link **24**, as known in the art. The network **22** may include one or more wireless networks including wireless wide area networks, wireless local area networks, the Internet, intranets, or any other suitable network or networks. The portable device **16** for purposes of illustration only, will be referred to as a same type of portable device **12** that may communicate via a link **28** either directly with portable device **12** via, for example, a short range wireless communication link such as a Bluetooth or any other suitable link and may also utilize a wireless wide area network link **30** to communicate with the network **22** or any other suitable device or devices. However, any suitable communication technique may be employed.

[0028] The portable device **12**, in this example a wireless portable device, includes a controller **32** that is operative to adjust a functional processing capability feature of the portable device **12** based on a determined received signal strength and battery capacity information. As such, it serves as a type of signal strength and battery capacity based dynamic feature controller. A functional processing capability feature may include a device feature wherein processing of data occurs and the processing of data can be adjusted. For example, a functional processing capability feature may include a user perceptible feature that is based on the execution of software application (e.g., any executable code such as, but not limited to, applets or executable code in any form) where the control of circuits that effect the processing of data. Accordingly, functional processing capability features may be, for example, an email feature, a game playing feature, a video playback feature, an audio playback feature, an audio recording feature, voice communication feature, the quality of service provided to a user by a particular application, or any other suitable functional processing capability feature. As to the quality of service, an application for example, can be controlled to provide higher quality features for a user or low quality features for a user. For example, in the context of a 3D game, the application is controlled as described herein, for example, to perhaps render in a higher resolution mode or use fewer primitives to represent objects depending upon user priority settings and battery capacity and/or received signal strength indication information. Another example may be for a video playback feature, reducing the quality of resolution output or frame rate for the display. In one example, the controller **32** adjusts the functional processing capability features of the device by controlling, at an application level, operation of an application operating on the device based on a determined signal strength and battery capacity level of the device. An application may be, for example, a software module or modules executing on one or more processors such as, but not limited to, CPU cores, DSP cores, graphics processing cores or other processors. The controller **32** may be implemented, for example, as a processor executing one or more suitable software modules that cause the processor or processors to carry out the operations described herein. Alternatively, the controller **32** may be implemented as discrete logic in the form of an application specific integrated circuit, or state machines or any other suitable structure or may be implemented by any suitable combination of hardware, software, and firmware as known in the art.

[0029] FIG. **2** illustrates in block diagram of one example of the portable device **12**, such as a wireless handset device, such as a cell phone or any other suitable device as noted above. As shown, the device **12** may include a communication structure **200** that may include a plurality of buses or other interconnections as desired to allow the various blocks to communicate with one another. The portable device **12**, in this example, includes one or more speakers **202**, input/output interfaces **204**, such as keypads, graphic user interfaces, or any other suitable interfaces, one or more displays, one or more frame buffers **208**, memory **210**, a camera **212**, a battery **214**, a multimedia processor **216**, a baseband processor **218**, a wireless transceiver **220** and the controller **32**.

[0030] The multimedia processor **216** may be, for example, a multimedia core that is separate from or integrated with the baseband processor **218** or controller **32** as desired. It will be recognized that the functional blocks illustrated in FIG. **2** may be incorporated as any suitable structure, such as one or more integrated circuits or other structures as known in the art. The multimedia processor **216** may be, for example, a graphics processing core in combination with audio and video processing circuitry to allow the generation of graphics and/or video for display on one or more displays **14** and **206** and employs the frame buffer **208** to store intermediate data and final data for display as known in the art. As shown, the controller **32** may be incorporated in the multimedia processor or baseband processor or may be a stand alone integrated circuit if desired. The baseband processor **218**, as known in the art, suitably processes received signals or signals to be transmitted via wireless transceiver **220** and may include, for example, any necessary wireless telephone processing circuitry to process voice or circuitry to process data information that is received or sent via the wireless transceiver **220**. The battery **214** is operatively coupled to the various elements to supply power when the device is operated in a battery mode. As used herein, a battery can include any suitable structure that has a limited power capacity. For example, the battery **214** may be a charged capacitor, fuel cell, lithium based power source or any suitable portable limited power source and may include one or more limited capacity power sources, such as a plurality of discrete power sources that are electrically coupled together, or may take any suitable form as known in the art.

[0031] The frame buffer **208** may be employed in memory **210** or other memory and may take any suitable form and may be included, for example, in the multimedia processor **216** or as part of any other module as desired. The frame buffer **208** and memory **210** may take any suitable form including, but not limited to, ROM, RAM, optical storage structures, or any suitable digital storage medium. The memory **210**, or any other suitable memory, may contain the executable instructions that when executed cause the controller or any processing device to operate as indicated herein. It will be recognized that the blocks shown in the figure are meant to show functional blocks and may be suitably incorporated and combined as desired. As such, the memory may include suitable registers or the processors may include the registers or any suitable structure may be used as understood in the art. As known in the art, the camera **212** may be any suitable image providing circuit including

a camcorder or any other suitable structure that provides an image to, for example, the multimedia processor **216** for processing and display on one or more displays **14** and **206** as known in the art. It will be recognized that the functional blocks shown in FIG. **2** are merely examples and that any suitable functions may be employed in a portable device as known in the art. Also, the controller need not utilize RSSI information, but instead, or in combination, may incorporate user priority settings to control the functional processing capability features of the device. It may also use RSSI information in addition to user priority information and battery capacity information as noted above.

[0032] FIG. **3** illustrates one example of a method for dynamically controlling a functional processing capability feature of the portable device that may be implemented using one or more of the blocks shown in FIG. **2**. In addition, any other suitable element including a network element **15** remote from the device **12** may perform the operations. It will also be recognized that the order of operations of the methods described herein may be suitably changed as recognized by one of ordinary skill in the art depending upon a desired outcome. As shown, the method starts in block **302** when the wireless portable device has power and is in an "on" state. In block **304**, the method includes determining a received signal strength for the portable device. This may be done, for example, by a received signal strength determinator, as known in the art, which may be part of the wireless transceiver **220** or any other suitable logic that determines a received signal strength by the portable device and may be in the form of received signal strength indication (RSSI) which may be determined either by processing received signals or receiving a value indicating the signal strength from an external device such as another mobile device or from the network if desired. Based on the received signal strength information, the method includes, as shown in block **306**, adjusting a functional processing capability feature of the portable device and based on battery capacity information. The battery capacity information may be obtained, for example, by the controller **32** or from any other suitable battery capacity detection or determination circuit or may be stored in a register or any other memory location. The battery capacity information may be, for example, information representing how much remaining power is available from the battery at a given point in time. The battery capacity information may also include information indicating the capacity in terms of the amount of energy (E.G., joules of energy) available from the battery. This can be represented in any suitable manner such as power per time such as a number of microwatts that are available per unit time given a current or expected operating load of the device, or it may simply be the number of ampere-hours which would be independent of any current or expected load on the device, or other suitable representation. The effective energy from a battery is usually not a linear function of time or load, so this data can be looked up through a table, or queried from the battery itself (for "smart" batteries).

[0033] Adjusting functional processing capability feature of the device may be performed, for example, by the controller **32** or any other suitable element and may include, for example, selecting which software application will operate on the device based on the determined received signal strength and battery capacity information. For example, a phone or voice application may be given priority over an email application and as such, the email application may be shut down or limited to receiving only emails from specific designated senders as set, for example, through a graphic user interface. This may require some communication with a server to ensure that the server held back any e-mail from senders not on the current list of acceptable senders. The priority based functional processing capability feature control acts, for example, to shut down if desired, lower priority applications to allow enough battery capacity to operate the primary or higher priority applications.

[0034] Alternatively, functional processing capability features of the device may be adjusted at an application level so that a given application is controlled so that it provides a different quality of service to the user based on the determined received signal strength and battery capacity information. Examples of such operations are also provided below.

[0035] FIG. **4** is a block diagram illustrating the controller **32** as an application level power management system **400**. The system may be within the portable device **12** and in this example, includes memory containing battery performance data **402**The battery performance data **402** may be historical data of the capacity consumed by a particular application using particular operating parameters (e.g., processor clock and voltage settings, RSSI, other applications running) for a relevant unit (e.g., per unit of talk time). In this example, the battery performance data would be a array of data with multiple entries that could be pre-populated and then updated over time with actual usage information. The manufacturer can provide this information as well (e.g., performance vs. loading and versus battery age). The system then keeps track of loading levels and battery age. The battery performance degrades over time, and battery management systems (e.g., in laptop computers) keep track of how often a battery is discharged and charged, and maintain an updated amp*hours (or capacity) rating. Table **402** can contain data allowing the device to predict battery energy capacity for different power consumption levels (i.e. for different current or power draw levels) across different temperatures and for different wear levels of the batteries (note that maximum stored charge typically drops after multiple charge/discharge cycles since many batteries are in fact consumables with limited lifetime—e.g. 2 years). These battery tables can generally be pre-computed (e.g. manufacturer tables). The application power sensor **426** can be used to measure application power, or this can be inferred by the derivative (rate of change over time) of the battery energy level **406**, so application power levels need not be stored in the table. It can also hold data indicating how much power different applications/services would consume, in various configurations of those apps/services.

[0036] The device may include a battery energy level monitor **404**, memory containing received signal strength information **406**, auxiliary sensors such as temperature sensors **408** that provide temperature information **409** to the controller **32** and memory containing network congestion information **410**. A graphic user interface **412** is shown which allows a user to select on a per application basis for example, whether the controller should control features to allow the maximum application runtime that the user desires or a maximum quality of service that the application provides or any suitable level therebetween. The graphic **414** presented on a display provides selectable application runtime information **416** within a range of the controller either providing a maximum quality of service level by the appli-

cation or a maximum application run length time. The desired application quality of service information is selected by the user and shown as information **418** and is provided to the controller. Alternatively, the user specified runtime length for each application may be provided as shown as data **420** as selected through a suitable graphic user interface or other suitable interface. In this example, the controller **32** is a suitably programmed processor or set of processors that include, for example, an application processing portion **422** that executes the application software **424** such as a game, an email application, voice application, digital audio playback application, camera application, or any other suitable code used in conjunction with a feature selectable by the user. The controller also includes an application power sensor module **426** that may be for example, software executed by the controller in addition to a total power calculator and application runtime predictor module **428** and quality of service selector **430** both of which may be implemented as software modules executed by the controller **32**.

[0037] The battery performance data **402** can be data, for example, prestored in memory for the given battery that is present in the portable device. The battery performance data **402** may be provided, for example, by a battery manufacturer or from any other suitable source and indicates for the particular battery type, and at a given voltage level, the amount of power that the battery can provide. The battery energy level monitor **404** monitors the present voltage level and provides a current battery level **406** which may then be used by the total power calculator and application runtime predictor **428** to determine how much battery capacity the battery can currently provide by, for example, using the battery level **406** to look up the corresponding power that the battery can provide. It will be recognized, however, that any other suitable technique may be used to determine the battery capacity information. The received signal strength information **406** may be used to determine how to control various applications or functional processing capability features as further described below. The application power sensor **426** may be, for example, a current sense circuit or voltage sense circuit for the application processor **422** to determine how much power is being consumed when executing the application software **424**. The application power usage information **440** is also provided to the total power calculator and application runtime predictor **428**. The total power calculator and application runtime predictor **428** determines the amount of time, for example, that the current application **424** can be run at its current level based on the current amount of power usage **440**, and the battery capacity information. The total power calculator and application runtime predictor then predicts, for example, the runtime length of the application (functional processing capability features provided by the application) and selects a suitable quality of service to meet the runtime goal information **418** set by the user. The quality of service selection then determines whether the application processor **422** needs to dynamically control the processing by the application processor of the application software **424** by providing, for example, setting information **442** for the application processor. The received signal strength indicator **406** serves as a wireless signal strength determinator that determines a received signal strength of the portable device. The auxiliary sensor information **409** may be used to better predict remaining battery capacity. For example, if the temperature of the device or controller is high, more leakage and more power consumption may occur.

[0038] The total power calculator and application runtime predictor **428** serves as a battery capacity determinator and generates battery capacity information for use in determining the estimated runtime that can be provided by the current battery capacity. In one embodiment, the controller **32** adjusts the functional processing capability features of the portable device by selecting which application will operate on the device based on the determined received signal strength and battery capacity information. For example, when a low signal strength is detected, the controller **32** may increase power consumption by increasing the transmit power of the wireless transceiver **220** and may also shut off applications or control, at an application level, the operation of an application to reduce the power consumed by one or more applications. The total power calculator and application runtime predictor estimates how much power will be used under a given operating condition.

[0039] In the example where the graphic user interface **412** provides, for example, a bar graph or other suitable graphic user interface to allow a user to set a talk time threshold, the user may set, for example, a minimum fifteen minute talk time threshold for an emergency call mode, for example. The controller **32** sets the functional processing capability feature based on the user settable talk time threshold by, for example, shutting down all currently operating applications if the remaining battery capacity threshold is reached in order to preserve the desired talk time designated by the settable talk time threshold. The controller **32** leaves "on" the circuitry and other applications associated with the voice communication to facilitate the voice operation, but may shut down or otherwise lower power consumption with all other operations. This may enable a user to set a minimum emergency call time period by refraining from running other applications (e.g., operate in its camera mode, allow music to be played back, etc.) when the reserve threshold time is met. When the reserved power level is reserved for an emergency call, the controller **32** determines an estimate of the amount of power (e.g., battery capacity) that will be used to provide the functional processing capability feature that is selected by the user and reduces the other processing capability features to preserve power for an emergency call. An emergency call may be a call, for example, that is a 911 call. The device is controlled to reserve an emergency call power level and shuts down other applications that if left to run, would reduce the battery power to a point where an emergency call could not be carried out or an important call would not be received (such as from a designated sender such as a spouse or child).

[0040] FIG. **5** illustrates one example of a method according to one embodiment of the invention that allows a user to reserve an emergency call period by setting, for example, an emergency call power threshold and control the device to dynamically control functional processing capability features of the device in a way that attempts to maximize the runtime of an application until the emergency call threshold is met.

[0041] Referring also to FIG. **9**, an application energy consumption versus time curve diagram illustrates dynamic functional processing capability feature adjustments (of which quality of service adjustments are one example) made by the controller **32** at set thresholds **902** and **904**, such as the application runtime information **416** (see FIG. **4**). The

reserve battery energy level **906** may be used, for example, for voice calls. The available energy above this level may be used for playing games, using cameras or other features. However, once the battery energy level **908** is met, the controller **32** does not allow certain applications or features (e.g., a game application) to be executed. Instead, in this mode of operation controller **32** may only allow a voice mode to be activated. Within the battery level range **906** are further prioritization of applications. For example, the emergency call level **910** may be the highest priority level in that no other applications are allowed to run once this battery capacity level has been reached to allow the device at least to be used for emergency calls for safety reasons. Lesser priority levels may be set within battery level range **906** for other applications. For example, a e-mail communication application may have a lesser priority than the emergency call level **910** and a music play back application may have a priority level less than the e-mail communication application but more than exemplary game application priority level described above. In this exemplary embodiment, once battery energy level **908** is met or reached, the exemplary game application will be shut down stopping further game application play. As the battery energy level **908** transitions through to emergency call level **910** (as a result of battery power consumption), music playback application will be the next application shut down followed by the e-mail communication application. Thereby, upon reaching battery level **910** only voice communications will be able to be performed. It will be recognized that the device may be configured so that any suitable application or feature may serve as the highest priority feature. For example, one other mode might be "shut off everything NOT related to my game". For example, if a user is on a plane (or just don't want any calls) and wants to play a game or listen to music the user interface allows the user to select a mode to shut off the radio frequency portion of the phone and prioritize certain applications over the phone-call portion while optimizing battery life. Or if a map is downloaded to the phone and it is a high priority map (the only map available is the one on the phone), the user may not want the radio frequency transmitting portions on and consuming power since they may want the map to be available as highest priority.

[0042] Referring back to FIG. **5**, the method **500** includes determining the received signal strength and remaining battery power capacity (as shown in block **304**). As shown in block **502**, the method includes determining the available device quality of service levels based on the RSSI and determined remaining battery capacity. This is shown in further detail by blocks **504** and **506**. As shown this may include, for example, receiving the user configurable input quality of service levels through the graphic user interface **412**. The user may set the quality of service levels on a per application basis or any suitable basis. This may include selecting a given application for a maximum available runtime or to instead maximize the quality of service irrespective of the amount of power it may consume. As such, the graphic user interface **412** is used to receive the user input and stores in a lookup table (or other suitable storage mechanism) the quality of service level and corresponding power control data for different quality of service levels on a per application basis or other suitable basis. The corresponding power control data may include, for example, the operational clock rates and supply voltage levels for given processing cores or application specific integrated circuits that are used by the application, such as one or more graphics processing cores if the application is a game. Any other suitable power control information may be used to reduce or increase power consumption for a given application. Although this example is described with reference to controlling power on a per application basis, it will be recognized that the power is controlled on any functional processing capability feature basis.

[0043] As shown in block **508**, if the determined quality of service or functional processing capability feature utilizes power for a given runtime length that is above the emergency call threshold, meaning that there is enough power to both run the application at a quality of service setting as designated by the user, the method continues to block **510** to control the device to adjust the current quality of service setting to a new setting level based on predicted future power usage levels at the new setting. As such, if it is predicted that the desired quality of service level that is set by the user can only be maintained by, for example, increasing power usage then power settings are changed to meet the quality of service setting. However, as shown in block **512**, if the quality of service feature that has been selected and the amount of power to meet that quality of service level is not available in comparison to an emergency call threshold, the device will enter the emergency call mode and effectively shut down all applications to reserve remaining power for voice communications (e.g., emergency calls), should one need to be made. As such, the controller can shut down functional processing capability features of the wireless device to reduce power consumption to preserve power for an emergency call. The controller **32**, or processor that provides the GUI, when it receives the user configurable input quality of service levels through the graphic user interface, stores the configuration information as functional processing capability feature setting data that includes, for example, clock settings and/or associated voltage level settings for circuits within the device as required to meet a given quality of service setting.

[0044] Also, in one example, to effect a functional processing capability feature, when the device is in an emergency call mode, the controller reduces the display capability of the wireless device by shutting down one of multiple displays or uses a smaller display portion of a single display during the emergency call mode to conserve power. As such, the functional processing capability of the device is changed since it need only process data for a display in a smaller portion of a screen or output to a single display instead of multiple displays. Block **514** shows in more detail one example of controlling the device to adjust functional processing capability features that use a lookup table that contains the settings for the device such as register settings that define clock frequencies and power supply voltage level settings, for example, for various circuits within the device are stored in a lookup table. To adjust the power consumption level of, for example, a particular processing core or portions within a processing core, these values are written to control registers for the various circuits. This control is based on both remaining battery capacity and a received signal strength indication as noted above. It will be recognized that the operation can be changed to allow a user to de-select an emergency power mode so that a game can be played or other feature can be used if desired.

[0045] FIG. **6** is a block diagram illustrating one example of functional processing capability feature setting data. On

a dynamic basis, such as multiple times per second or any other suitable period, the controller **32** samples the RSSI information **406** and also determines the battery capacity level. As shown 6 for a setting **600** where the received signal strength indication is high and the battery capacity is determined to be high, and network congestion information **410** indicates that there is low network congestion, a new quality of service setting or functional processing capability feature level for application **1** is set to the highest of quality service level for that application. Another table can be used that has the specific clock frequency settings, supply voltage settings or other control settings. When conditions change such as where the received signal strength is still high is shown by settings **602**, but the battery capacity is decreased to a low level. A different application, shown as App. **2**, may be set to a low quality service level so that for example a game that is being played if it is determined to be App. **2** may operate in a lower quality manner by the controller **32** causing a frame rate change from 30 frames per second being output to 15 frames per second being output, or may change a graphics resolution level so that the graphics images are less clear which may take less processing capacity to create and hence less current draw to save power since the battery capacity is low. As such, as shown in this particular example, received signal strength, battery capacity and network congestion information is used to determine the functional processing capability feature level for a particular application. In another example, if the network congestion is high and the signal strength level is low, the device may need to increase power consumption for the application that controls voice communication to output a higher transmit signal level in an attempt to provide a necessary level of communication with the network. This may be done at the expense of another application which may be shut off to allow the voice application to take priority. Alternatively, the device may enter a reduced power mode in response to the network congestion information indicating that a decrease in network congestion has occurred since this may indicate that it may take less power to transmit a signal in a lower network congestion situation. Other functional processing capability features of the device may also be controlled based on network congestion, received signal strength and battery capacity.

[0046] FIG. **7** is a flowchart illustrating another example of a method of dynamically controlling a functional processing capability feature of a portable device in accordance with one embodiment to the invention. As shown in block **700**, the method includes controlling the sample rate of an RSSI/signal energy check to occur periodically as desired such as every few seconds or other suitable period. As shown in block **702**, the method includes sampling an RSSI energy and current power usage levels of the device. As shown in block **704**, the method includes determining if the reserved energy level (see FIG. **9**) has been exceeded. This may be done for example by determining the current battery capacity and determining from the power usage levels of the device if the battery capacity level will fall below the reserve energy level. If so, as shown in block **706**, the method includes notifying a user or exiting the application. However, as shown in block **704** if the reserve time is not exceeded, the method includes predicting how long a particular application can run at the current power usage level based on a current quality of service setting at which the application is operating **708**. As shown in block **710**, the method includes sampling the current power being consumed by the current application setting and also setting a quality of service target for the application. As such, block **710** refers to looking up the QoS Target for the "Working Set" (or active set) of running applications for the comparison in block **712**. Run-length is a QoS target—if it is not met in as shown in block **712**, then adjustments are made as shown in blocks **714** and **716** to accommodate this and try to extend run-time. For example, as shown in block **712**, the method includes determining whether the quality of service that was set has met an optimal quality of services as desired by the user. This is done using FIG. **6**, and the another table containing desired clock frequency settings and/or power supply voltage settings as noted above. Inputs **418**, **420** sampled as shown in block **710** are used to guide the adjustment.

[0047] If the quality of service setting is already at an optimal setting, the method begins over again. However, if the quality of service does not meet the optimal quality of services level, the method includes, as shown in block **714**, looking up the quality of service adjustment factors in a look-up table for the current running applications and selecting revised power profiles for each of the applications based on the information in the look-up table. By way of example, the look-up table may include the information shown in FIG. **6** as well as additional information as to how to set circuits or functional blocks of the device to change power consumption levels of the various applications to allow a quality of service to be met for a higher priority application. For example, if the priority application is a game being executed, and another application such as a camera application is active, the camera application can be controlled so that a lower quality resolution image is taken by the camera to provide enough power to run the game at a higher quality resolution level. As shown in block **716**, the method includes applying the revised power profile which may include for example setting suitable register settings to control clock frequencies of circuits or supply voltages of circuits as known in the art to enable the new quality of service to be provided by the application.

[0048] FIG. **8** illustrates another method for dynamically controlling operation of a device to provide power savings. Unlike the processes described above, no received signal strength indication is necessary. This method may also be carried out by the controller **32** or any other suitable structure. As shown in block **800**, the method includes determining remaining power capacity of the battery. As shown in block **802**, the method includes determining a power consumption level of the device such as by determining the current power used by the elements of the device and based on user or otherwise prioritized functional process capability features, and in response to the remaining power capacity of the battery and the power consumption rate of the portable device, dynamically controlling the device as shown in **804**. The operation of the device is based on user feature priority settings to provide power to run higher priority features at the expense of a lower priority functional processing capability feature consistent with the user prioritized functional processing capability features. The method may also include obtaining data representing user prioritized functional processing capability features such as from a storage location in the device, but can be received wirelessly by the device from the network or other wireless device. In this example, a user, through a graphical user interface, or any other suitable

interface can classify applications that are available on the portable device as being higher priority or lower priority as illustrated for example in FIG. **10**. In this example, as the battery level drops, the device runs applications that are of a higher priority while terminating or not allowing execution of lower priority applications. A user may also configure how much battery power to reserve for critical applications such as for emergency **911** calls, or other suitable operations. The graphical user interface **412** can also provide data that allows the user to specify an action to be taken once the battery power level has dropped to a threshold level. For example, a user may choose to disable a use of a non-critical applications or allow the device to instead provide a warning to the user that the threshold has been reached.

[0049] By was of illustration, through a user interface, the user may set for example the priority level for a given device function so that user settings **1000** may be entered through a graphic user interface. The graphic user interface may also for example allow the user to set the priority level **1002** of the various device functions (also referred to as applications). In this example, the voice or phone function has been set at the highest priority and the user setting is for ten minutes as shown by quality of service settings **1004** so that the device will attempt to allow at least a minimum of 10 minutes of talk time as the priority. As the power capacity of the device battery decreases, lower priority functions are either shut down or the quality of service of a feature is reduced in an attempt to conserve battery power. In this example, a digital audio player play time is set for 10 minutes (and/or a volume level can be set) the resolution of the video, such as from a camera or video playback circuit such as an MPEG decoder may be set, the e-mail application may be set to allow only one megabyte of e-mail data to be received or just headers to be received and, for device functions such as games, the frames per second of output resolution on a display may be set to a particular setting. As such the prioritized features **1004** may include data that represents a talk time threshold, such as 10 minutes and the controller **32** dynamically controls the functional process capability features of the device to provide power for a voice communication feature at the expense of a lower priority feature, such as a game playing feature, consistent with the talk time threshold as the remaining power capacity of the battery decreases. The controller **32**, in response to the remaining power capacity of the battery, a power consumption rate of the portable device and user prioritized functional processing capability features, dynamically controls the functional processing capability features to provide power for a higher priority feature at the expense of a lower priority functional processing capability feature consistent with the user prioritized information.

[0050] FIG. **11** illustrates one example of a graphic user interface **1100** that provides selectable priority information shown as "critical" or "noncritical" for various applications (e.g., functional processing capability features) of the device shown as **1102**. As such, the user interface **1100** provides selectable functional processing capability feature priority data **1104** when selected, provides the selected feature priority dated to memory for storage as the data representing the user prioritized functional processing capability features.

[0051] FIG. **12** illustrates another example of another portion of the graphic user interface **1200** that indicates for a high priority application type, the user is able to set the reserve battery power level as a percentage of total battery power as shown by the graphic **1202**. The graphic user interface **1200** also provides selectable notification information **1204** to allow the user to select whether to provide an alert message that denies use of noncritical application or a message requesting permission to run a noncritical application.

[0052] FIG. **13** illustrates another example of a graphic user interface **1300** that provides feature priority data but in a more prioritized manner to allow, for example, five priority settings per application. FIG. **14** illustrates a graphic user interface **1400** for providing selectability of reserve battery power levels for a given application priority setting.

[0053] If desired, the method may also include dynamically controlling operation of the device based on the priority information, based on the battery capacity and based on received signal strength information. For example, if the received signal strength information indicates that the signal strength is decreasing, the controller **32** may shut off a lower priority application to allow additional power to be used for a higher transmit power during the high priority voice operation. Other control techniques will be recognized by one of ordinary skill in the art.

[0054] As shown in FIGS. **13** and **14** a user can reserve battery power based on priority. Using a graphical user interface, such as a control panel, the user reserves battery power based on application priority. For example, priority **1** applications can reserve 20% battery power. When the battery power has been drained to this level, only priority **1** applications are used. Priority **2** applications may be configured to require 40% battery power and when there is greater than 40% battery power, priority **2** or higher applications are allowed to be run.

[0055] FIG. **15** illustrates another method for providing power control in a portable device which also takes into account network congestion level as previously described with reference to FIG. **6**. As shown in block **1500**, the method may include continuing to receive signal strength information and remaining battery power capacity along with the network congestion level information. As shown in block **1502**, the method includes entering a lower power mode of the device based on the detected decreased congestion level. For example, if the network congestion level has gone down since the last assessment, the device under control of the controller, enters into a low power mode since less transmit power is required and the device can go into a power saving mode as desired.

[0056] FIG. **16** illustrates another method that includes as shown in block **1600**, if the network congestion levels is beyond the desired threshold such as indicating that the network congestion level has increased, the controller causes an increase in the signal transmit power of the device and reduced power consumption is caused by the decrease in other feature capabilities to partly offset the increase in transmit power. Alternatively, a controller repeatedly sends packets at current power levels based on the indication that the remaining battery capacity is at a suitable level and the network congestion level has increased, for example. Alternatively, where there is high network congestion, the network may signal the portable device indicating a high congestion condition and the information, in addition to the received signal strength indication and battery capacity, is used to trigger a lower power mode for the device since the device does not attempt to send data during high network congestion since the likelihood of a successful transmission is lower.

[0057] As noted above, among other advantages, the user may prioritize applications or operations of other features of the portable device and based on the users need for a specific amount of talk time or runtime of an application, the controller calculates the power consumption of the desired

feature alone or in combination with signal strength. Based on this assessment the device may turn those features or applications off as required to meet the talk time or runtime setting or may suitably reduce the quality of service of an application to meet the runtime requirements. In addition, reserve power may be maintained if desired and during the reserve time only basic operation of the device may be employed to conserve power for emergency calls or other operations. Other advantages will be recognized by those of ordinary skill in the art.

[0058] The above detailed description of the invention and the examples described therein have been presented for the purposes of illustration and description only and not by limitation. It is therefore contemplated that the present invention cover any and all modifications, variations or equivalents that fall within the spirit and scope of the basic underlying principles disclosed above and claimed herein.

What is claimed is:

1. A portable device comprising:

a battery;

a controller, operatively coupled to the battery, and responsive to (i) a remaining power capacity of a battery and (ii) a power consumption rate of the portable device and based on prioritized functional processing capability features of the portable device, dynamically control functional processing capability features of the device to provide power for a higher priority feature at the expense of a lower priority functional processing capability feature consistent with the prioritized functional processing capability features.

2. The portable device of claim **1** wherein the data representing user prioritized features comprises data representing a talk time threshold and wherein the controller is operative to dynamically control functional processing capability features of the device to provide power for a voice communication feature at the expense of a lower priority feature consistent with the talk time threshold as a power capacity of the battery decreases.

3. The portable device of claim **1** comprising a user interface operative to provide selectable functional processing capability feature priority data and to provide selected feature priority data to the memory for storage as the data representing prioritized functional processing capability features.

4. The portable device of claim **1** wherein the controller is also operative to dynamically control operation of the device to provide power for a higher priority functional processing capability feature at the expense of a lower priority feature consistent with the data representing user prioritized features as a power capacity of the battery decreases based on received signal strength information.

5. A wireless portable device comprising:

a wireless signal strength determinator operative to determine a received signal strength of the portable device; and

a controller, operatively coupled to the wireless signal strength determinator, and operative to adjust a functional processing capability feature of the wireless portable device based on the determined received signal strength and battery capacity information.

6. The wireless device of claim **5** wherein the controller adjusts the functional processing capability feature of the device by controlling, at an application level, operation of an application operating on the device based on the determined received signal strength and battery capacity information.

7. The wireless device of claim **5** comprising:

a battery; and

a battery capacity determinator operatively coupled to the battery and operative to generate the battery capacity information based on a remaining battery capacity of the battery.

8. The wireless device of claim **5** wherein the controller adjusts the functional processing capability features of the device by selecting which application will operate on the device based on the determined received signal strength and battery capacity information.

9. The wireless device of claim **5** comprising a user interface operative to provide a user settable talk time threshold and wherein the controller is operative to set the functional processing capability feature based on the user settable talk time threshold to reduce functional processing capability feature to preserve a desired talk time indicated by the user settable talk time threshold.

10. The wireless device of claim **5** wherein the controller is operative to determine an amount of power that will be used to provide a functional processing capability feature and is operative to reduce processing capability features to preserve power for an emergency call.

11. The wireless device of claim **10** wherein the controller is operative to shut down functional processing capability features of the wireless device to reduce power consumption to preserve power for the emergency call.

12. The wireless device of claim **5** comprising memory, operatively coupled to the controller, that stores data representing functional processing capability feature setting data.

13. The wireless device of claim **11** wherein the controller reduces display capability of the wireless device when in an emergency call mode.

14. A portable device comprising:

a wireless signal strength determinator operative to determine a received signal strength of the wireless device; and

a controller, operatively coupled to the wireless signal strength determinator, operative to adjust a functional processing capability feature of the wireless device based on the determined received signal strength, battery capacity information and network congestion information.

15. The wireless device of claim **14** comprising a wireless receiver operative to receive the network congestion information from a wireless network communication signal.

16. The wireless device of claim **14** wherein the controller adjusts the functional processing capability feature of the device by controlling, at an application level, operation of an application operating on the device based on the determined received signal strength and battery capacity information.

17. The wireless device of claim **14** comprising:

a battery; and

a battery capacity determinator operatively coupled to the battery and operative to generate the battery capacity information based on a remaining battery capacity of the battery.

18. The wireless device of claim **14** wherein the controller is operative to adjust the functional processing capability feature of the device by selecting which application will operate on the device based on the determined received signal strength and battery capacity information.

19. The wireless device of claim **14** comprising a user interface operative to provide a user settable talk time threshold and wherein the controller is operative to set the functional processing capability feature based on the user settable talk time threshold to preserve a desired talk time indicated by the user settable talk time threshold.

20. The wireless device of claim **14** wherein the controller is operative to determine an amount of power that will be used to provide a functional processing capability feature and is operative to enter an emergency call mode prior to an out of power condition, to preserve power for an emergency call.

21. The wireless device of claim **20** wherein the controller is operative to shut down functional processing capability features of the wireless device to reduce power consumption to preserve power for the emergency call.

22. The wireless device of claim **14** comprising memory, operatively coupled to the controller, that stores data representing functional processing capability feature setting data.

23. The wireless device of claim **21** wherein the controller reduces display capability of the wireless device when in an emergency call mode.

24. A method comprising:

obtaining data representing user prioritized functional processing capability feature; and

based on user prioritized functional processing capability features of a portable device and in response to a remaining power capacity of a battery in the device and a power consumption rate of the portable device, dynamically controlling operation of device to provide power for a higher priority functional processing capability feature at the expense of a lower priority functional processing capability feature consistent with the user prioritized functional processing capability features.

25. The method of claim **24** wherein the user prioritized functional processing capability features comprises data representing a talk time threshold and wherein the method includes dynamically controlling operation of the device to provide power for a higher priority functional processing capability feature at the expense of a lower priority functional processing capability feature consistent with the talk time threshold as a power capacity of the battery decreases.

26. The method of claim **24** comprising providing selectable functional processing capability feature priority data and storing data in memory representing selected user prioritized functional processing capability features.

27. The method of claim **24** wherein dynamically controlling operation of the device to provide power for a higher priority functional processing capability feature at the expense of a lower priority feature consistent with the data representing user prioritized functional processing capability features as a power capacity of the battery decreases is also done based on received signal strength information.

28. A method comprising:

determining a received signal strength for a portable device; and

adjusting a functional processing capability feature of the portable device based on the determined received signal strength and battery capacity information.

29. The method of claim **28** comprising adjusting the functional processing capability feature of the device by controlling, at an application level, operation of an application operating on the device based on the determined received signal strength and battery capacity information.

30. The method of claim **28** wherein adjusting the functional processing capability features of the device comprises selecting which application will operate on the device based on the determined received signal strength and battery capacity information.

31. The method of claim **28** comprising using a user settable talk time threshold and setting the functional processing capability feature based on the user settable talk time threshold to in an effort to preserve a desired talk time indicated by the user settable talk time threshold.

32. The method of claim **28** comprising determining an amount of power that will be used to provide a functional processing capability feature and is operative to reduce processing capability features to preserve power for an emergency call.

33. The method of claim **28** comprising shutting down functional processing capability features of the wireless device to reduce power consumption to preserve power for the emergency call.

34. The method of claim **32** comprising reducing display capability of the wireless device when in the emergency call mode.

35. The method of claim **28** further comprising adjusting a functional processing capability feature of the portable device based on network congestion information.

36. The method of claim **35** comprising causing the portable device to enter a reduced power mode in response to the network congestion information indicating a decrease in network congestion.

37. The method of claim **35** comprising determining if the network congestion information indicates a network congestion level at or beyond a desired high level threshold and if so, increasing signal transmit power of the portable device and reducing power consumption caused by other features, to partly offset the additional power consumption caused by the increase in transmit power.

38. The method of claim **35** comprising determining if the network congestion information indicates a network congestion level at or beyond a desired high level threshold and if so, repeating a sending of packets at a current power level.

39. The method of claim **28** comprising determining a power usage rate of the device based on a current operational condition of the device, predicting an amount of time that an application can continue to run based on the power usage rate; determine whether a desired application quality of service level can be maintained for a desired application run-time; if so, adjusting power consumption of the device and a quality of service level provided by the application in an attempt to meet the desired application run-time.

40. The method of claim **39** wherein adjusting power consumption of the device and a quality of service level provided by the application in an attempt to meet the desired application run-time comprises shutting down the application to maintain a minimum battery power energy reserve.

* * * * *