US 20090207817A1

(19) United States

(12) Patent Application Publication

Montemurro et al.

(10) Pub. No.: US 2009/0207817 A1

(43) Pub. Date: Aug. 20, 2009

(54) POLICY-BASED DATA ROUTING FOR A MULTI-MODE DEVICE

(76) Inventors: **Michael Montemurro**, Toronto (CA); **Nicholas Alfano**, Stratford-Upon-Avon (GB); **John-Luc Bakker**, Keller, TX (US); **Richard George**, Waterloo (CA); **Brian Alexander Oliver**, Fergus (CA)

Correspondence Address:
ECKERT SEAMANS CHERIN & MELLOTT
600 GRANT STREET, 44TH FLOOR
PITTSBURGH, PA 15219

(21) Appl. No.: **12/032,145**

(22) Filed: **Feb. 15, 2008**

Publication Classification

(51) **Int. Cl.**
H04Q 7/00 (2006.01)

(52) **U.S. Cl.** **370/338**

(57) **ABSTRACT**

Communication devices capable of at least two communication modes (e.g. WLAN, WMAN and WWAN and/or wired modes) can be configured to optimize communications using a policy-based mechanism to configure connections and routes. A rules engine evaluates its policies on a state change (e.g. network availability, time of day, etc.) to configure a routing table and, together with communication APIs, provides an appropriate connection to an application for its respective communications. Policies may be responsive to various factors such as Radio Access Technology (high/low bandwidth), cost, presence, time of day, location, application type and quality of service (QoS) requirements among others to optimize communications.

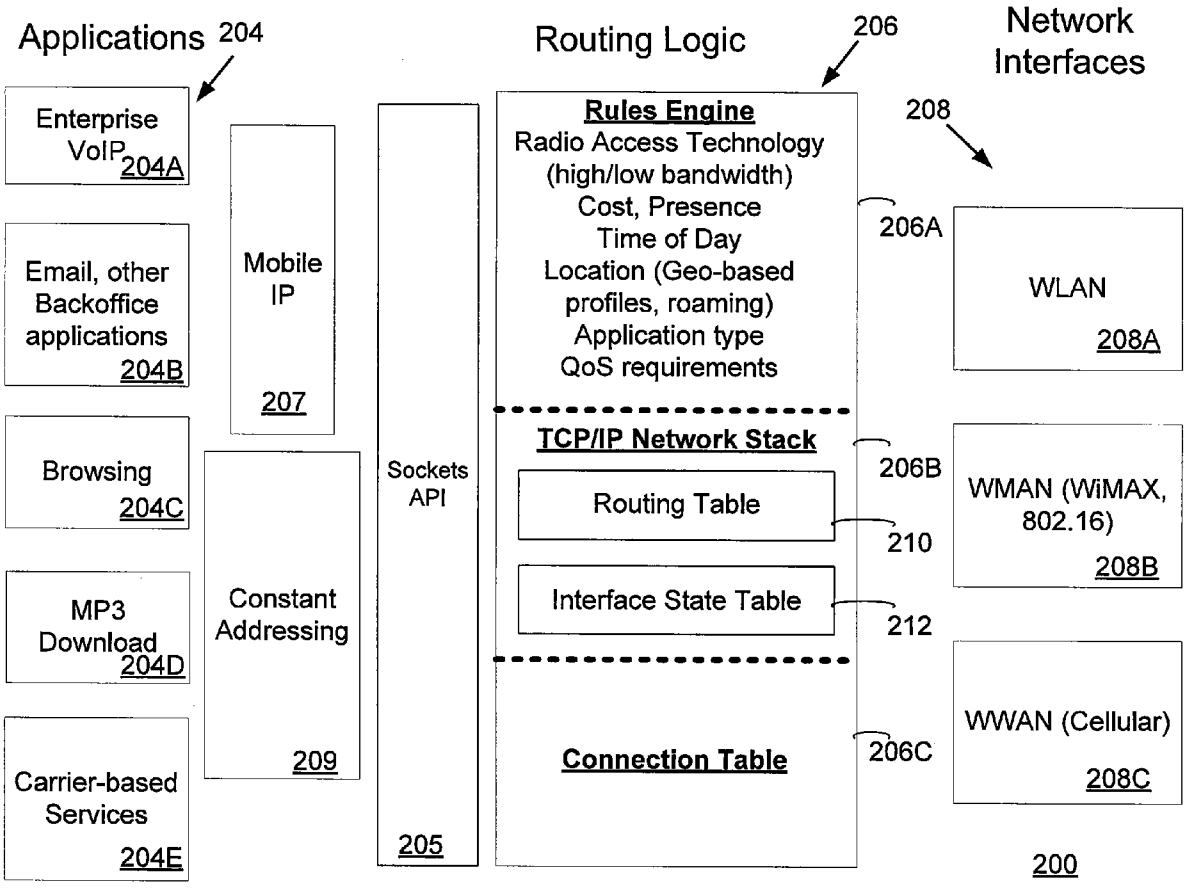

MOTOROLA-LENOVO EXHIBIT 1007

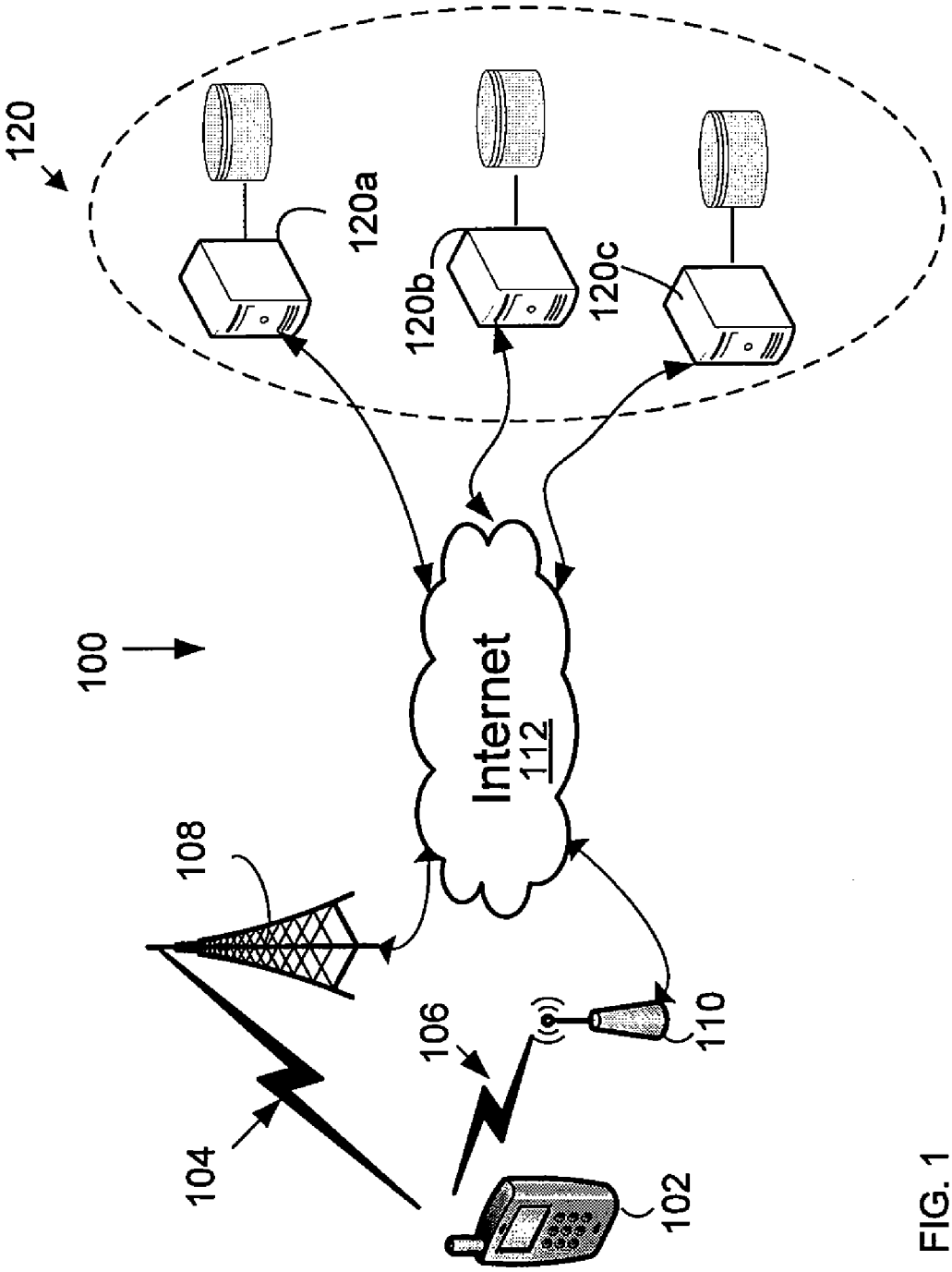

FIG. 1

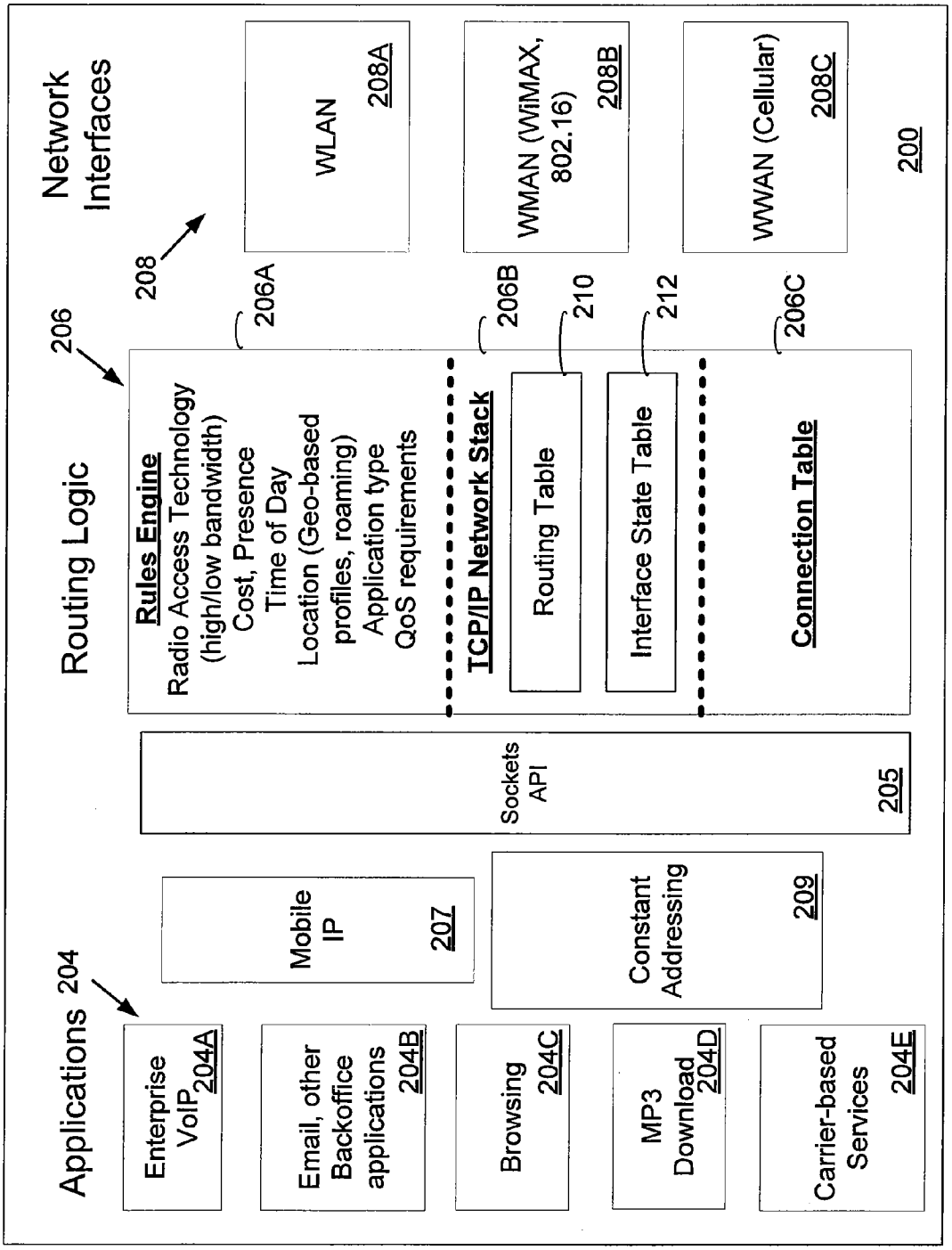
Network Interfaces
208
WLAN
208A
WMAN (WiMAX, 802.16)
208B
WWAN (Cellular)
208C
200
206
Routing Logic
206A
Rules Engine
Radio Access Technology (high/low bandwidth)
Cost, Presence
Time of Day
Location (Geo-based profiles, roaming)
Application type
QoS requirements
206B
TCP/IP Network Stack
210
Routing Table
212
Interface State Table
206C
Connection Table
Sockets API
205
Applications
204
Mobile IP
207
Constant Addressing
209
Enterprise VoIP
204A
Email, other Backoffice applications
204B
Browsing
204C
MP3 Download
204D
Carrier-based Services
204E

Figure 2

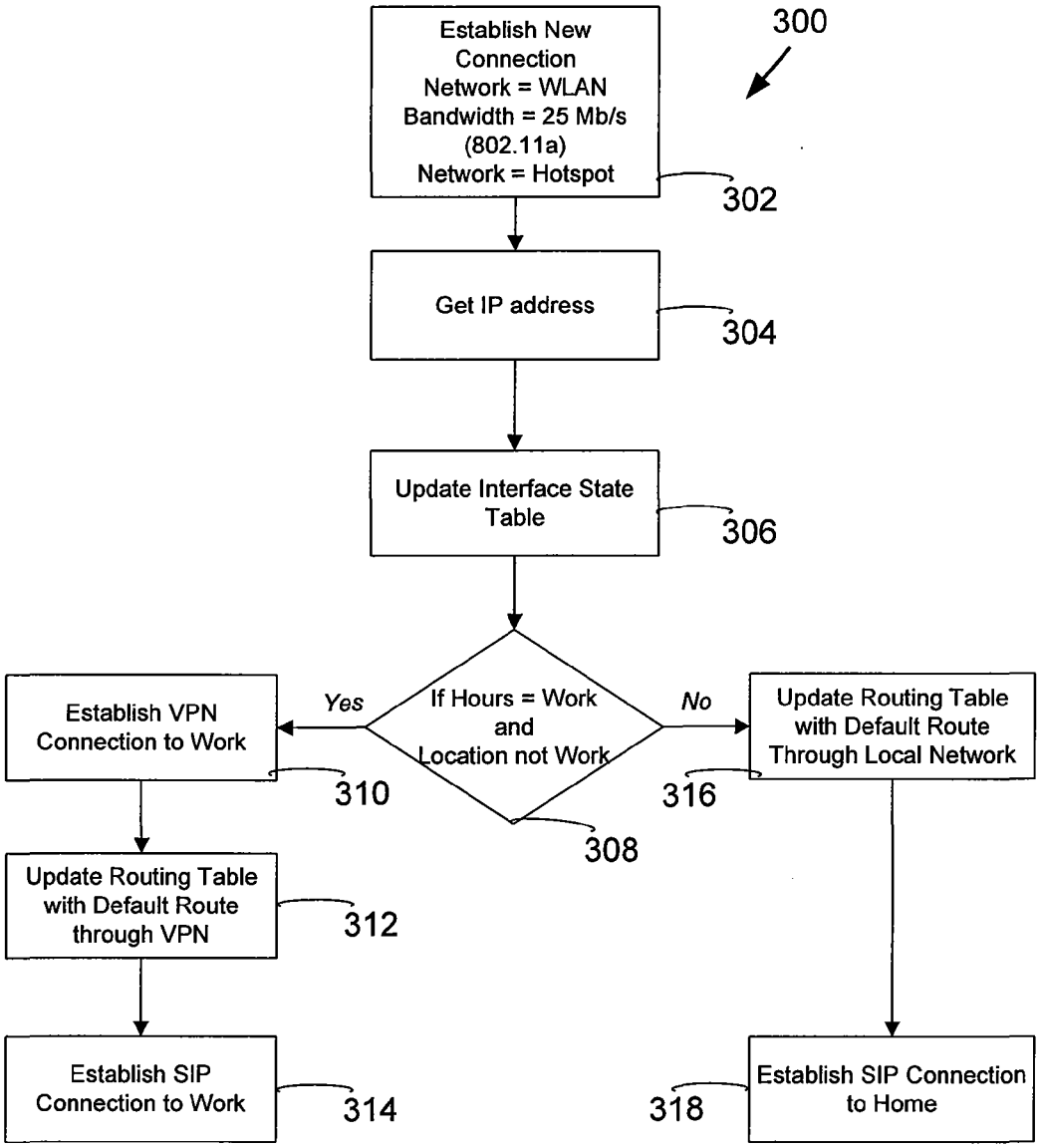
300
Establish New Connection Network = WLAN Bandwidth = 25 Mb/s (802.11a) Network = Hotspot
302
Get IP address
304
Update Interface State Table
306
If Hours = Work and Location not Work
308
Yes
No
Establish VPN Connection to Work
310
Update Routing Table with Default Route Through Local Network
316
Update Routing Table with Default Route through VPN
312
Establish SIP Connection to Work
314
Establish SIP Connection to Home
318

Figure 3

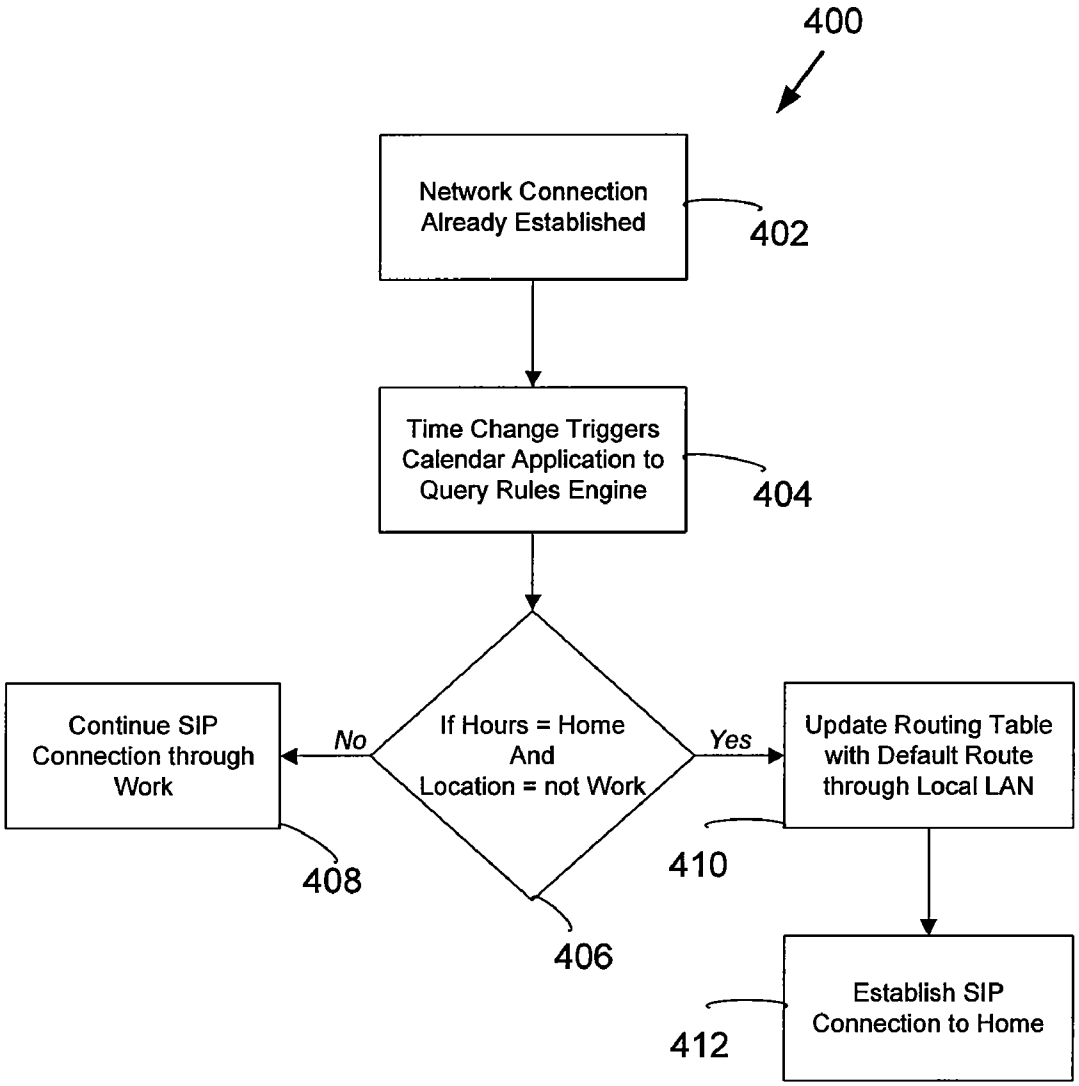
400
Network Connection Already Established
402
Time Change Triggers Calendar Application to Query Rules Engine
404
If Hours = Home And Location = not Work
406
No
Yes
Continue SIP Connection through Work
408
Update Routing Table with Default Route through Local LAN
410
Establish SIP Connection to Home
412

Figure 4

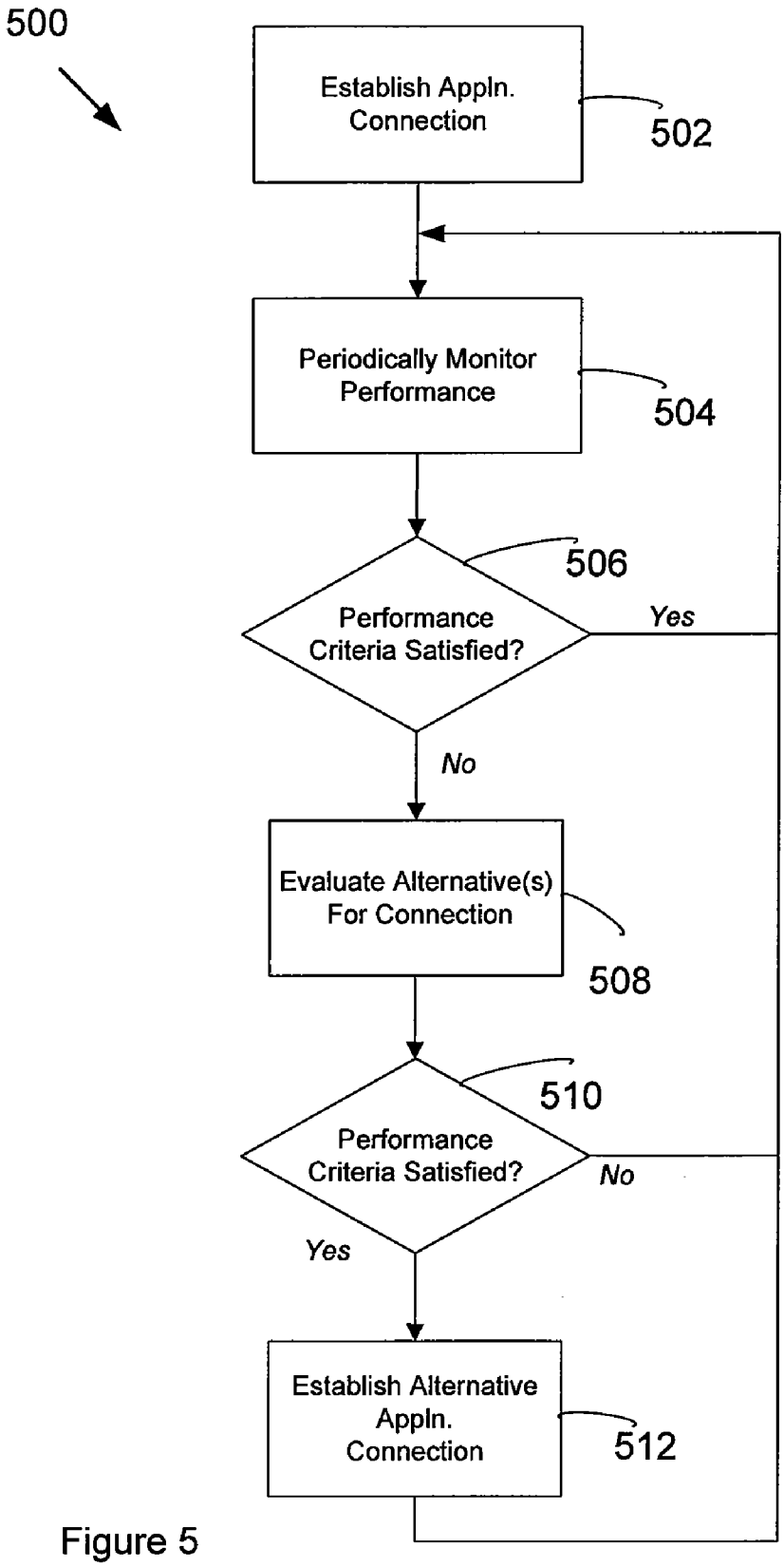
500
Establish Appln. Connection
502
Periodically Monitor Performance
504
506
Performance Criteria Satisfied?
Yes
No
Evaluate Alternative(s) For Connection
508
510
Performance Criteria Satisfied?
No
Yes
Establish Alternative Appln. Connection
512

Figure 5

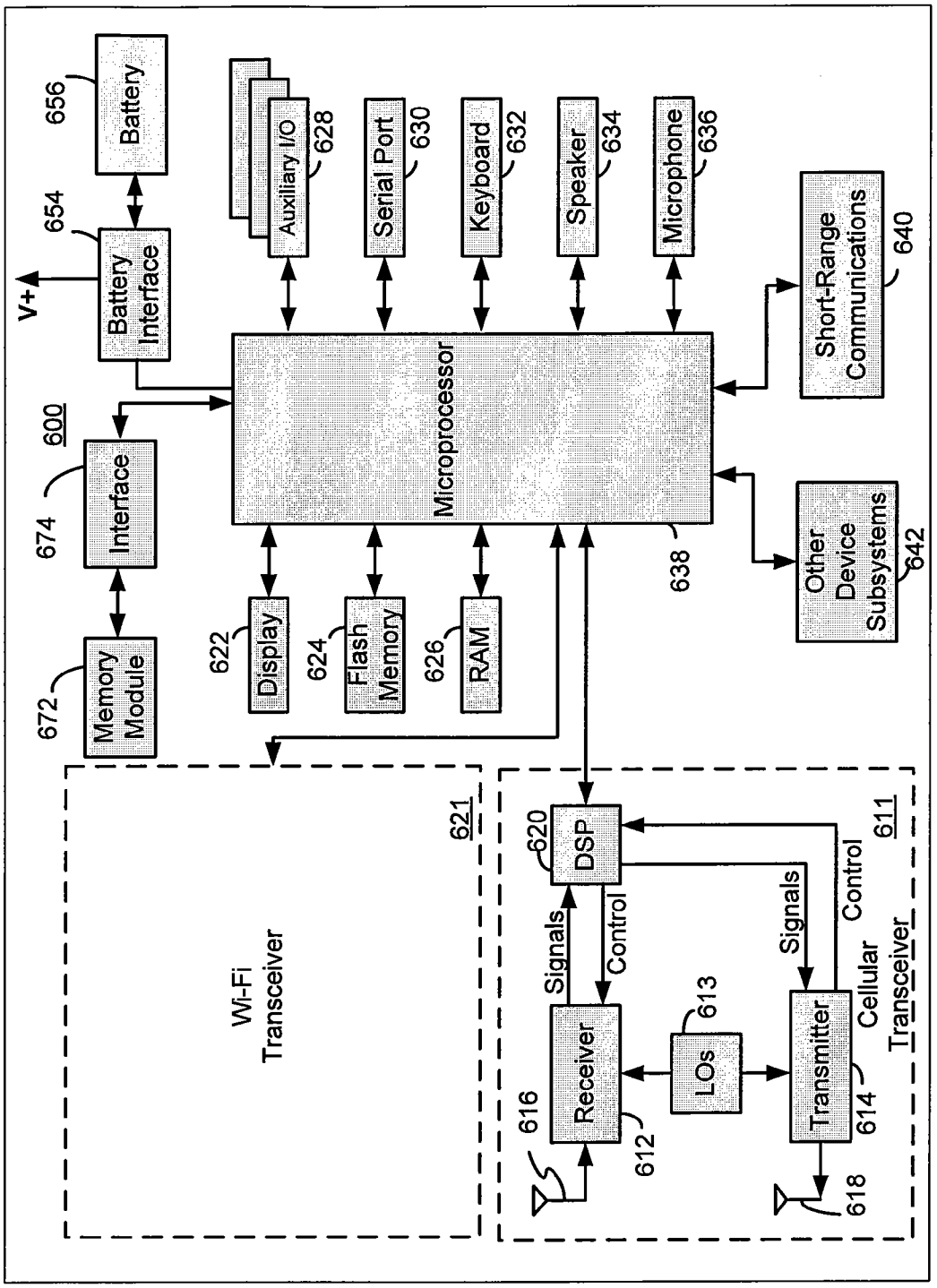
600
656
Battery
654
Battery Interface
V+
674
Interface
672
Memory Module
Auxiliary I/O
628
Serial Port
630
Keyboard
632
Speaker
634
Microphone
636
Microprocessor
638
Short-Range Communications
640
Other Device Subsystems
642
622
Display
624
Flash Memory
626
RAM
Wi-Fi Transceiver
621
620
DSP
Signals
Control
Signals
Control
611
Receiver
616
612
LOs
613
Transmitter
614
618
Cellular Transceiver

Figure 6

POLICY-BASED DATA ROUTING FOR A MULTI-MODE DEVICE

FIELD

[0001] The present invention relates generally to a system and method for operation of a multi-mode wireless communication device and more particularly to policy-based routing of communications among two or more modes of wireless communication.

BACKGROUND OF THE INVENTION

[0002] Due to the proliferation of wireless networks, there are a continually increasing number of wireless devices in use today. These devices include mobile telephones, smart phones, personal digital assistance (PDAs) with wireless communication capabilities, two-way pagers and the like. Concurrently with the increase of available wireless devices, software applications running on such devices have increased their utility. For example, the wireless device may include an application that retrieves a weather report for a list of desired cities or an application that allows a user to shop for groceries.

[0003] With the advent of dual or multi-mode devices (for example, devices with radio access technologies that provide access to wireless local area networks (WLAN) (e.g. access technologies under the Wi-Fi brand), wireless metropolitan area network (WMAN) (e.g. access technologies under the WiMAX brand) and wireless wide area networks (WWAN) (e.g. cellular technologies like GSM/GPRS EDGE, UTMS, HSPA, CDMA, WCDMA, etc.) applications can have the ability to offer different usage models depending on the mode of wireless operation selected. Selection among the different radio access technologies may be driven by the different properties of the technologies such as bandwidth, range, cost, and power consumption, among other considerations. Selection may be an initial selection of a technology or a re-selection/evaluation particularly in view of a change to real-time conditions.

[0004] For instance, on a dual mode device, carrier voice traffic content can be accessed over GSM radio, while enterprise voice traffic content can be accessed over a WLAN radio. For a browsing application on the device, website content can be accessed from a WLAN, WMAN or WWAN (e.g. GPRS or EDGE) network. There are costs associated with application access from these different networks. There are also quality considerations such as the speed at which content can be delivered, or in the case of streaming media, the quality of service at which the content is delivered. It is therefore desirable to have a mechanism that seeks to optimize communications for multi-mode capable devices, that is, that seeks to improve communications for multi-mode capable devices.

BRIEF DESCRIPTION OF THE DRAWINGS

[0005] An embodiment of the invention will now be described by way of example only with reference to the following drawings in which:

[0006] FIG. **1** is a block diagram showing an example communication network;

[0007] FIG. **2** is a block diagram of policy-based data routing for multi-mode operations of a device for the communication network infrastructure of FIG. **1**;

[0008] FIGS. **3** to **5** are flowcharts showing operations of policy-based data routing; and

[0009] FIG. **6** is a block diagram of a representative mobile device that may be configured with multi-mode applications as described.

[0010] For convenience, like numerals in the description refer to like structures in the drawings.

DETAILED DESCRIPTION OF THE PREFERRED EMBODIMENT

[0011] Wireless communication devices capable of communicating in at least two network communication modes (e.g. WLAN such as Wi-Fi, WMAN such as WiMAX and WWAN such as GSM/GPRS cellular and wired modes (e.g. LAN, among others)) can be configured to optimize communications using a policy-based mechanism to configure connections and routes. A rules engine evaluates its policies on a state change (e.g. network availability, time of day, etc.) to configure a routing table and, together with communication APIs, provides an appropriate connection to an application for its respective communications. Policies may be responsive to various factors such as Radio Access Technology, high/low bandwidth, cost, presence, time of day, location, application type and quality of service (QoS) requirements among others, to optimize communications.

[0012] Referring to FIG. **1**, an example communication network **100** is illustrated generally. Communication network **100** comprises a mobile wireless communication device **102**, or simply mobile device **102**, coupled for wireless communication via at least one wireless communication network (e.g. **104** and **106**) to at least one of a plurality of backend servers **120***a*, **120***b* and **120***c* (collectively **120**). For simplicity, the drawings and description refer to a single mobile wireless communication device **102** whereas in practice and as would be understood to a person of ordinary skill, a plurality of such devices are typically present in the network **100**. A particular mobile device **102** may comprise various computing devices such as a desktop computer, a laptop or other portable computer, a smart phone, a personal digital assistant (PDA), and the like.

[0013] In the example network **100**, mobile device **102** is capable of wireless communication in accordance with WLAN or WMAN (e.g. Wi-Fi or WiMAX) and WWAN (e.g. GSM Cellular) standards. As such, it may communicate through cellular network **104** and a representative base station **108** coupled to the Internet **112** and/or through WLAN or WMAN network **106** and its access point **110** also coupled to Internet **112**. Servers **120** are also coupled to Internet **112**. Though shown as communicating through the public Internet **112**, other network configurations will be apparent to persons of ordinary skill in the art. For example, one or more backend servers **120** may be accessible to device **102** over a LAN, such as an enterprise LAN (not shown).

[0014] For simplicity, various network infrastructure (e.g. for wireless carriers and enterprises, including gateways, firewalls, etc.) is not shown. By way of example, there may be an application gateway (not shown) comprising a gateway server, a provisioning server, a discovery server and an application repository. The gateway server may be in communication with both the provisioning server and the discovery server. The gateway server is further in communication (e.g. via a public network like Internet **112** or a private network) with at least some of the plurality of the backend servers **120** that provide desired services such as Web services, database services, as well as other event source services. The gateway server may act as a message broker between the device **102**

and the backend servers **120**. By way of example, a Web service may provide media content (e.g. music or other audio, video, etc.) for downloading to the mobile device **102**. The service may provide notifications of new content and an interface to obtain same where these notifications are push asynchronously and unsolicited to device **102** via a Push server (not shown). Notifications may be relatively light in their communication requirements while content downloading is relatively heavy (higher bandwidth and costs). A database service may have similar requirements when exchanging large amounts of data with the device **102**.

[0015] Further services provided to device **102** by network infrastructure that is not shown may include:

- **[0016]** Administrative and Management Service dealing with policies, such as those specifying allowed applications for users, services available to applications and more;
- **[0017]** Provisioning Service controls and manages which applications users can download to a mobile devices;
- **[0018]** Data Optimization Service transforms data for efficient wireless transmission and use on mobile devices;
- **[0019]** Connection Service provides TCP/IP and HTTP-based connectivity between the device and other applications e.g. for browsing;
- **[0020]** Application Integration Service supports the integration of and data transmission between device applications and backend servers **120**;
- **[0021]** Application Repository centrally manages published applications; and
- **[0022]** Mobile IP Home and Foreign Agent Services permitting a mobile device to attach to an IP network via a home and foreign network and continue to receive packets sent to the device's home network IP address. When the device is attached via a foreign network, a home agent on the device's home network captures and encapsulates packets for the device and tunnels them to the device via a foreign agent on the foreign network.

[0023] Multi-mode component-based applications for execution in a network communication infrastructure supporting component-based applications and tools for programming same are described in U.S. patent application Ser. No. 11/763630, filed Jun. 16, 2007 by the present assignee herein and entitled "Device For Communicating In Multiple Modes Using Multi-Mode Applications" which is incorporated herein by reference.

[0024] With the advent of dual-mode and multi-mode devices combining communication technologies, applications can be developed and operated to provide different usage models that may vary depending on the mode of operation that is available at runtime. FIG. **2** illustrates, in accordance with an embodiment thereof, a block diagram of policy-based data routing for multi-mode operations of device **102** for communication network infrastructure of FIG. **1**.

[0025] FIG. **2** shows a view of a run-time store (e.g. RAM) **200** of device **102** comprising, broadly, a plurality of applications **204**, routing logic **206** and network interfaces **208**. It is understood that store **200** may include other software (instructions and data) than is shown, including, for example, an operating system and other interfaces. In the example that is FIG. **2**, applications **204** include enterprise VoIP application **204**A for voice over IP communications in an enterprise data network such as a LAN; email and other back office applications **204**B that communicate typically non-voice data; browsing application **204**C such as a Web browser, MP3 Download **204**D for acquiring audio or other media files and carrier-based services **204**E such as SMS and voice communications over a carrier network.

[0026] For convenience and the present example, networks **104** and **106** are primarily IP-based. Applications **204** may require connection oriented communications e.g. using transmission control protocol (TCP) at the transport layer over the IP network (TCP/IP) and/or connectionless communication e.g. using User Datagram Protocol (UDP) over the IP network.

[0027] Routing logic **206** includes a rules engine **206**A (sometimes called an inference engine) as a policy-based mechanism using rules to configure TCP/IP network stack **206**B and connection table **206**C to coordinate communications for applications **204** using communications interfaces (also referenced as network interfaces) **208**. An IT administrator, for example, can create a policy to add a WLAN network profile to a device (a WLAN profile is configured with the SSID, security credentials, etc.). The IT Administrator can also create a policy to disable or enable an application for a user. A rule is a specific policy that is entered in the "rules engine" for carrying out the policy.

[0028] In the example device **102**, network interfaces **208** include an interface for each of WLAN **208**A, WMAN **208**B and WWAN **208**C network communications. Though not shown, other network interfaces could include short-range wireless interfaces (e.g. BlueTooth® wireless) and interface (s) for wired network communications (e.g. serial interfaces such as USB, RS 232, etc.). Though the examples are discussed in relation to multiple wireless modes, persons of ordinary skill in the art will appreciate that the multi-mode configurations and operations described herein can also include wired modes.

[0029] Rules engine **206**A configures the communication operations with a set of rules/policies that could include various factors such as radio access technology (e.g. for high/low bandwidth properties), cost, presence, time of day, location (e.g. geo-based policies, network roaming), destination IP address, application type, and Quality of Service (QoS) requirements, among others. A natural language example of a policy rule could be "the MP3 download application **204**D runs on the lowest cost network **104** and **106** available". Another example could be that "the CRM application (i.e. one of **204**B) only synchronizes the sales contact database (e.g. **120**B) over a WLAN network **106**".

[0030] The TCP/IP network stack **206**A includes a routing table **210** and an interface state table **212**. The interface state table **212** updates as device **102** connects and disconnects with the access network **104** or carrier network **106**. In a similar manner, the routing table **210** updates according to which interfaces **208** are available. For instance, if both the WLAN and WWAN radios (FIG. **6**) of device **102** are connected to their respective networks **104** and **106**, there will be a route associated with each network **104** and **106** that would look like:

Source IP	Destination IP	Device Interface (208)
192.168.1.20	0.0.0.0	WLAN (208A)
67.69.20.142	0.0.0.0	WWAN (208C)

[0031] When an IP packet is destined for transmission, the TCP/IP network stack software **206**B matches the IP header of the packet to an entry in the routing table **210**. That match will determine which network interface **208** will be used for transmission of the packet.

[0032] Connection table **206**C manages connections from applications **204** on the device to remote applications on devices coupled via the networks **104** and **106**. Connection table **206**C has a respective entry corresponding to each application connection. For instance, a connection to a remote enterprise server (e.g. for email or back office application **204**B) would have its own specific entry in the connection table. The entries include the source IP, the destination IP, and the TCP or UDP port number. An example connection table looks like:

Source IP	Destination IP	Local Port	Remote Port
192.168.1.20	129.24.36.244	1023	21 (MP3 download by FTP)
67.69.20.142	29.164.236.32	NNN	NNNN (enterprise appln.)

[0033] Typically, communications for applications **204** are performed in one of two ways. One is socket-based using a socket-based application programming interface (API) **206** for communications. The application "delegates" communication details (set-up and tear down, etc. and management) to the socket. The other is a raw protocol connection where an application builds IP packets for transmission to another device on the network **104** or **106**. A socket-based connection uses the connection table and the routing table to determine how an IP packet will be transmitted on a network **104** and **106**. A raw connection uses only the routing table **210** to determine how an IP packet will be transmitted on the network **104** or **106**. The connection is maintained by the particular application and not by the connection table **206**C and its associated software.

[0034] In accordance with the present embodiment, rules engine **206**A configures (i.e. modifies, periodically in response to changes of state and the evaluation of its rules) connection table **206**C and routing table **210** to optimize the flow of communications over multiple communications modes (e.g. interfaces **208** and respective networks **104** and **106**).

[0035] On a state change (for example, based on a time of day, or the connecting/disconnecting of device **102** with a specific network **104** and **106**), rules engine **206**A executes and modifies, as applicable, the routing table **210** to ensure that data goes out the most appropriate network (via respective interface **208**). Rules engine **206**A also interacts with the connection API's to determine which interface would be best used to service a particular application.

[0036] Though not shown, a user interface may be provided on the device for a user and/or device administrator to configure rules for rules engine **206**A. Rules may be configured off-device (e.g. by a user and/or administrator) and transferred to the device via a communications interface. Such a transfer may be in association with the installation of an application or service provisioning of the device or upon an update or other event. For example, a group of devices maybe administered by an enterprise administrator and rules therefore defined by the administrator for such devices.

[0037] Device **102** optionally has mobile IP capabilities (e.g. via component **207**) to permit the device to attach to the Internet (IP network) via a home and one or more foreign networks (not shown). Mobile IP capabilities allow a mobile device to receive packets sent to its home network IP address when the device is attached via a foreign network and has a different IP address (a care-of-address) on that network. A home agent on the home network can intercept packets for the device, encapsulate and tunnel them to the mobile device via a foreign agent maintaining the care-of-address for the device. The mobile device may register the care-of-address of the foreign network with the device's home agent upon attaching via the foreign network. Applications may communicate transparently as the device moves between addresses on different networks and need not be aware of the device's IP address.

[0038] Device **102** optionally has other constant addressing capabilities (e.g. via component **209**) such as a unique personal identifier addressing (PIN) capability that permits routing of a message using the device's PIN through at least a portion of the network. Such addressing permits an application communicating via the network such as sending and receiving messages to avoid any dependency or need to be aware of an underlying IP address of a connection and thus preserve transparency during an access technology switch. Network infrastructure associates the device's constant PIN and varying IP address as the device moves about the IP network. One commercial example is PIN to PIN messaging using the BlackBerry® PIN and BlackBerry® network infrastructure provided by Research In Motion Ltd. Thus components **209** and **207** each provide network addressing transparency to applications.

[0039] FIGS. **3** and **4** illustrate representative operations for multiple mode communications. Briefly, for a routed application such as Session Initiation Protocol (SIP) using UDP (e.g. VoIP **204**A) or an HTTP application (e.g. Browser **204**C) using TCP, the routing table controls how the traffic flows across the network. A time-based rule and/or a location-based rule can be formulated where during work hours, all SIP and HTTP traffic is directed through the corporate network (or a virtual private network (VPN) connection if the user is remote from work). However once work hours end, a rule could be triggered, for example, by a calendar application, to change the default route so that traffic is routed across the local LAN rather than the corporate network. If the user is at work, there could be another rule to disable this default route change.

[0040] FIG. **3** is a flowchart illustrating operations **300** updating routing table **210** on the establishment of a new connection via wireless network **106**. At step **302**, a WLAN network connection is establish via network **106**. An IP address is obtained (step **304**) and the interface state table **212** is updated (step **306**). At step **308**, a rule is evaluated by engine **206**A. The example rule evaluates time and location information for the device **102**. Other information as discussed above may be utilized in rules. FIG. **3** illustrates simplified operations, on the assumption that the device is not at the work location. At step **310**, for a yes decision, where the

device is not at work but it is a typical work hour, a virtual private network (VPN) connection is established via Internet **112** between the device **102** and an enterprise server (not shown). The routing table **210** is updated (step **312**). At step **314** a SIP connection to the user's appropriate "work" server (e.g. an enterprise SIP server **120**) is established for SIP services. If device **102** was at work, meaning within the physical confines of an office, plant or campus having appropriate access security requirements, operations may determine such information and a VPN is not likely required when connecting.

[0041] For a no decision at step **308**, for example when it is not a work hour and the user's device **102** is not at work, the routing table **210** is updated (step **316**). At step **318**, a SIP connection to the user's appropriate "home" server (e.g. a backend server **120** providing SIP services) is established for SIP services when the user is not working.

[0042] FIG. **4** is a flowchart illustrating operations **400** for updating routing table **210** when a connection is already established (step **402**) but a time event has occurred (step **404**). At step **406**, the rules engine evaluates a time and location based rule as per step **308**. At step **408**, for a no decision, the existing SIP connection through work is maintained. At step **410**, for a yes decision, the routing table is updated to reference the local LAN through which the device is connecting rather than through the enterprise network and a SIP connection is establish with a server (**120**) providing such services when the user is at "home".

[0043] FIG. **5** illustrates operations **500** for switching access technologies when performance criteria fall below required standards that were meet at the time of establishment of the connection. At step **502**, a connection is established for an application using an access technology that meets performance criteria such as may be maintained by the Rules Engine. Such an establishment may be in accordance with operations **300**, for example, but need not be. The TCP/IP Stack **206**B and Connection table **206**C are updated accordingly.

[0044] Periodically (no specific wait period is shown), performance criteria are monitored and action taken as applicable (steps **504** and **506**). If the criteria are not maintained (via No branch from step **506**), alternatives for the present connection, such as an alternative access technology or different instance of the same type of access technology (e.g. a different WLAN network or subnetwork via an alternative access point, PPP connection or GSM APN) can be evaluated (step **508**). If a better alternative does not exist (via No branch at step **510**), operations **500** may continue (e.g. via loop back to step **504**). Otherwise, a connection via a selected alternative can be established (step **512**) and operations **500** continued. Concerning the frequency of monitoring (step **504**), such may depend on the particular radio access technology or other indicators. It may be adaptive (such as through measuring an increase in response time between HTTP request/response, etc.) As monitoring comes with some overhead and battery consumption, skipping unnecessary 'monitor cycles' can be beneficial.

[0045] Should the first connection fail (e.g. be dropped, for example), then operations **500** may operate to choose a technology and connection that is a best available alternative to re-establish the connection using the rules engine **206**A, network stack, etc. as applicable.

[0046] Should the requested service (e.g. after receiving an indication from the network, for example through receipt of a SIP **380** (Alternative Service)) indicate a need to connect using an alternative technology (e.g. due to invocation of emergency services), then operations **500** may operate to choose a technology and connection that is a best available alternative to re-establish the connection using the rules engine **206**A (based on example rules that take into account the service requested (e.g. a SIP request containing a known emergency identifier)), network stack, etc. as applicable.

[0047] For some applications and in some embodiments, access technology and network stack specifics, etc., may need to be reflected in the application protocol that is using the connection. For example, SIP's P-Access-Network-Info header [RFC 3455] needs to be populated. Hence, an application may interact with the rules engine **206**A (e.g. via a query or other mechanism) to acquire access network information.

[0048] Some access technology switches will result in IP address changes. If an application using the connection needs to be aware of the IP address, the change may not be transparent and may need to be communicated to (or otherwise discoverable by) the application. For example, if a tunnel destination IP address changes, such address may need to be provided to the application or any other component responsible for maintaining and advising remote agents and the like. Where an application is not aware of the IP address, the dynamic switching of the access technology can be transparent. Transparency assumes the new access technology offers similar performance service levels to the prior access technology. In other case where the differences are significant (e.g. between GSM/GPRS and WAN 802.11 technologies), an application may need to tailor its behaviour to account for the new access technology in use. Buffer sizes, retransmission timers etc. may need to be changed.

[0049] As mentioned above, Mobile IP or a constant addressing protocol may be useful for making access technology changes transparent to applications. Thus the rules engine can be use to select an initial mode of communication to establish a connection, for example, choosing among various available access technologies at run-time and for switching a mode of communication for an established connection monitoring performance or other criteria.

[0050] FIG. **6** is a detailed block diagram of an embodiment of a handheld wireless communication device **600** that may be configured as a mobile device **102** as described. Handheld device **600** is preferably a two-way communication device having at least voice and advanced data communication capabilities, including the capability to communicate with other computer systems. Depending on the functionality provided by handheld device **600**, it may be referred to as a data messaging device, a two-way pager, a cellular telephone with data messaging capabilities, a wireless Internet appliance, personal digital assistant (PDA), smart phone, BlackBerry or a data communication device (with or without telephony capabilities). In the present embodiment, handheld device **600** has both Wi-Fi transceiver and cellular transceiver capabilities. As such device **600** may communicate in respect modes with any one of a plurality of access points and base station transceiver systems (not shown) within its geographic coverage area.

[0051] Handheld device **600** may incorporate a cellular transceiver (communication subsystem) **611**, which includes a receiver **612**, a transmitter **614**, and associated components, such as one or more (preferably embedded or internal) antenna elements **616** and **618**, local oscillators (LOs) **613**,

and a processing module such as a digital signal processor (DSP) **620**. As will be apparent to those skilled in field of communications, particular design of communication subsystem **611** depends on the communication network in which handheld device **600** is intended to operate.

[0052] Handheld device **600** may send and receive communication signals over the network after required network registration, authentication or activation procedures have been completed. Signals received by antenna **616** through the network are input to receiver **612**, which may perform such common receiver functions as signal amplification, frequency down conversion, filtering, channel selection, and analog-to-digital (A/D) conversion. A/D conversion of a received signal allows more complex communication functions such as demodulation and decoding to be performed in DSP **620**. In a similar manner, signals to be transmitted are processed, including modulation and encoding, for example, by DSP **620**. These DSP-processed signals are input to transmitter **614** for digital-to-analog (D/A) conversion, frequency up conversion, filtering, amplification and transmission over communication network via antenna **618**. DSP **620** not only processes communication signals, but also provides for receiver and transmitter control. For example, the gains applied to communication signals in receiver **612** and transmitter **614** may be adaptively controlled through automatic gain control algorithms implemented in DSP **620**.

[0053] Network access is associated with a subscriber or user of handheld device **600**, and therefore handheld device **600** comprises a memory module **672**, memory module card or a Removable User Identity Module (R-UIM) or Subscriber Identity Module (SIM/USIM), to be inserted in or connected to an interface **674** in order to operate in the network. Alternatively, memory module **672** may be a non-volatile memory that is programmed with configuration data by a service provider so that mobile station **600** may operate in the network. Since handheld device **600** is a mobile battery-powered device, it also includes a battery interface **664** for receiving one or more rechargeable batteries **666**. Such a battery **666** provides electrical power to most if not all electrical circuitry in handheld device **600**, and battery interface **664** provides for a mechanical and electrical connection for it. The battery interface **664** is coupled to a regulator (not shown in FIG. **6**) that provides power V+to all of the circuitry.

[0054] Handheld device **600** may include a Wi-Fi transceiver **621** that may comprise similar components/chipsets to subsystem **611** adapted for one or more Wi-Fi protocols. Though Wi-Fi is shown, WiMAX is one alternative transceiver. In some embodiments, device **600** may be capable of both Wi-Fi and WiMAX communications in accordance with software-defined radio ("cognizant radio") techniques.

[0055] Handheld device **600** includes a microprocessor **638** that controls overall operation of mobile station **600**. Communication functions, including at least data and voice communications, are performed through communication subsystem **611**. Microprocessor **638** also interacts with additional device subsystems such as a display **622**, a flash memory **624**, a random access memory (RAM) **626**, auxiliary input/output (I/O) subsystems **628**, a serial port **630**, a keyboard **632**, a speaker **634**, a microphone **636**, a short-range communications subsystem **640**, and any other device subsystems generally designated at **642**. Some of the subsystems shown in FIG. **6** perform communication-related functions, whereas other subsystems may provide "resident" or on-device functions. Notably, some subsystems, such as keyboard **632** and display **622**, for example, may be used for both communication-related functions, such as entering a text message for transmission over a communication network, and device-resident functions such as a calculator or task list. Operating system software used by microprocessor **638** is preferably stored in a persistent store such as flash memory **624**, which may alternatively be a read-only memory (ROM) or similar storage element (not shown). Those skilled in the art will appreciate that the operating system, specific device applications or parts thereof, may be temporarily loaded into a volatile store such as RAM **626**.

[0056] Microprocessor **638**, in addition to its operating system functions, preferably enables execution of software applications on handheld device **600**. A predetermined set of applications that control basic device operations, including at least data and voice communication applications, will normally be installed on handheld device **600** during its manufacture. A preferred application that may be loaded onto handheld device **600** may be a personal information manager (PIM) application having the ability to organize and manage data items relating to a user such as, but not limited to, e-mail, calendar events, voice mails, appointments, and task items. Naturally, one or more memory stores are available on handheld device **600** and memory module **672** to facilitate storage of PIM data items and other information.

[0057] The PIM application preferably has the ability to send and receive data items via the wireless network. In a preferred embodiment, PIM data items are seamlessly integrated, synchronized, and updated via the wireless network, with the mobile station user's corresponding data items stored and/or associated with a host computer system thereby creating a mirrored host computer on handheld device **600** with respect to such items. This is especially advantageous where the host computer system is the mobile station user's office or enterprise computer system. Additional applications may also be loaded onto handheld device **600** through network, an auxiliary I/O subsystem **628**, serial port **630**, short-range communications subsystem **640**, or any other suitable subsystem **642**, and installed by a user in RAM **626** or preferably a non-volatile store (not shown) for execution by microprocessor **638**. Such flexibility in application installation increases the functionality of handheld device **600** and may provide enhanced on-device functions, communication-related functions, or both. For example, secure communication applications may enable electronic commerce functions and other such financial transactions to be performed using handheld device **600**.

[0058] In a data communication mode, a received signal such as a text message, an e-mail message, or web page download, or message according to another application **204** will be processed by applicable communication subsystem **611** or **621** and input to microprocessor **638**. Microprocessor **638** will preferably further process the signal, in accordance with an associated application, for output to display **622** or alternatively to auxiliary I/O device **628**. A user of handheld device **600** may also compose data items in accordance with an associated application, such as e-mail messages, for example, using keyboard **632** in conjunction with display **622** and possibly auxiliary I/O device **628**. Keyboard **632** is preferably a complete alphanumeric keyboard and/or telephone-type keypad. These composed items may be transmitted over a communication network through communication subsystem **611** or **621**.

[0059] For voice communications, the overall operation of handheld device **600** is substantially similar, except that the received signals would be output to speaker **634** and signals for transmission would be generated by microphone **636**. Alternative voice or audio I/O subsystems, such as a voice message recording subsystem, may also be implemented. Although voice or audio signal output is preferably accomplished primarily through speaker **634**, display **622** may also be used to provide an indication of the identity of a calling party, duration of a voice call, or other voice call related information, as some examples.

[0060] Serial port **630** in FIG. **6** is normally implemented in a personal digital assistant (PDA)-type communication device for which synchronization with a user's desktop computer as a desirable, albeit optional, component. Serial port **630** enables a user to set preferences through an external device or software application and extends the capabilities of handheld device **600** by providing for information or software downloads to handheld device **600** other than through a wireless communication network. The alternate download path may, for example, be used to load an encryption key onto handheld device **600** through a direct and thus reliable and trusted connection to thereby provide secure device communication. As well, it may be used as described above as a mode for applications **204**.

[0061] Short-range communications subsystem **640** is an additional optional component that provides for communication between handheld device **600** and different systems or devices, which need not necessarily be similar devices. For example, subsystem **640** may include an infrared device and associated circuits and components, or a Bluetooth™ communication module to provide for communication with similarly enabled systems and devices. Bluetooth™ may be used as described above as a mode for applications **204**.

[0062] Though described primarily in association with wireless mode operations, persons of ordinary skill in the art will appreciate that devices **102** may be configured for multi-mode operation selecting among different wireless modes and wired modes with suitable changes to the network infrastructure. Applications **204** may be configured for operations in accordance with multiple wireless modes, wired modes and both wireless and wired modes. Operations may be configured to select different modes of a same type of network communication as well. For example, to choose among available Wi-Fi networks or available cellular networks from different cellular service providers.

[0063] Although specific embodiments of the invention have been described herein, it will be understood by those skilled in the art that variations may be made thereto without departing from the spirit of the invention or the scope of the appended claims.

1. A multi-mode communication device comprising:

at least two communication interfaces configured to enable the device to communicate in at least two modes of communication; and

a processor and memory coupled to the processor for storing instructions for execution by the processor at runtime, said instructions defining:

at least one application configured for communication using at least one of said modes of communication; and

a routing component for routing communications for the at least one application among the communication interfaces, said routing component configured using rules to select a particular communication interface at runtime.

2. The multi-mode communication device of claim **1** wherein the routing component comprises a rules engine configurable by said rules.

3. The multi-mode communication device of claim **1** wherein the rules are responsive to at least one of Radio Access Technology type, bandwidth, cost, presence, time of day, location, application type and quality of service requirements.

4. The multi-mode communication device of claim **1** wherein the routing component operates to at least one of:

a) select an initial mode of communication in accordance with the rules to establish a connection for one of said applications; and

b) monitor said connection for switching the initial mode in accordance with the rules.

5. The multi-mode communication device of claim **4** wherein the instructions provide network address transparency to at least some of the applications in accordance with at least one of Mobile IP protocols and constant addressing techniques.

6. The multi-mode communication device of claim **1** wherein the routing component configures at least one of a routing table and connection table to route said communications via a particular communication interface in accordance with the evaluation of the rules at runtime.

7. The multi-mode communication device of claim **6** wherein the instructions define a communication API for handling communications on behalf of applications, said communication API routing said communications in accordance with the routing table and connection table.

8. The multi-mode communication device of claim **1** wherein a one of said two modes of communication operates in accordance with a mobile telephone standard and a second of said two modes of communication operates in accordance with a wireless LAN (WLAN) standard.

9. A method of multi-mode communication for a device comprising at least two communication interfaces configured to communicate in at least two modes of communication; and a processor and memory coupled to the processor for storing instructions for execution by the processor at runtime, said instructions defining at least one application configured for communication using at least one of said modes of communication; said method comprising:

routing communications for the at least one application among the communication interfaces using rules to select a particular communication interface at runtime.

10. The method of claim **9** wherein the rules are responsive to at least one of radio access technology type, bandwidth, cost, presence, time of day, location, application type and quality of service requirements.

11. The method of claim **9** comprising providing said rules to a rules engine of a routing component defined by said instructions.

12. The method of claim **9** wherein the instructions define a routing table and connection table for routing said communications and wherein the method comprises configuring at least one of the routing table and the connection table to route said communications via a particular communication interface in accordance with the evaluation of the rules at runtime.

13. The method of claim **12** wherein the instructions define a communication API for handling communications on

behalf of applications, said communication API routing said communications in accordance with the routing table and connection table.

14. The method of claim **13** comprising at least one of:

a) selecting an initial mode of communication in accordance with the rules to establish a connection for one of said applications; and

b) monitoring said connection for switching the initial mode in accordance with the rules.

15. The method of claim **13** comprising providing network address transparency to at least some of the applications in accordance with at least one of Mobile IP protocols and constant addressing techniques

16. A computer-readable storage medium having computer executable instructions stored thereon for routing communications for a device comprising at least two communication interfaces configured to communicate in at least two modes of communication; and a processor for executing said computer executable instructions at runtime; said computer executable instructions operable to route communications among the communication interfaces using rules to select a particular communication interface at runtime for at least one application executed by the device.

17. The computer-readable storage medium of claim **16** wherein the rules are responsive to at least one of radio access technology type, bandwidth, cost, presence, time of day, location, application type and quality of service requirements.

18. The computer-readable storage medium of claim **16** wherein the computer executable instructions are operable to interpret said rules at runtime using a rules engine.

19. The computer-readable storage medium of claim **18** wherein the computer executable instructions are operable to define a routing table and connection table for routing said communications and to configure at least one of the routing table and the connection table to route said communications via a particular communication interface in accordance with the evaluation of the rules at runtime.

20. The computer-readable storage medium of claim **19** wherein the computer executable instructions are operable to define a communication API for handling communications on behalf of the application, said communication API routing said communications in accordance with the routing table and connection table.

21. The computer-readable storage medium of claim **19** wherein the computer executable instructions are operable to at least one of:

a) select an initial mode of communication in accordance with the rules to establish a connection for one of said applications; and

b) monitor said connection for switching the initial mode in accordance with the rules.

* * * * *