**IN THE UNITED STATES DISTRICT COURT**
**FOR THE EASTERN DISTRICT OF TEXAS**
**MARSHALL DIVISION**

| | | |
|---|---|---|
| PICTIVA DISPLAYS INTERNATIONAL LTD. and KEY PATENT INNOVATIONS LIMITED, | § | |
| *Plaintiffs*, | § | |
| v. | § | CASE NO. 2:23-CV-00495-JRG |
| SAMSUNG ELECTRONICS CO., LTD. and SAMSUNG ELECTRONICS AMERICA, INC., | § | |
| *Defendants*. | § | |

**MEMORANDUM CLAIM CONSTRUCTION OPINION AND ORDER**

In this patent suit, Plaintiffs Pictiva Displays International, Ltd. and Key Patent Innovations Limited (together, "Pictiva") allege that Defendants Samsung Electronics Co., Ltd., and Samsung Electronics America, Inc., (together, "Samsung") infringe the claims of six (6) patents generally related to devices that use organic light emitting diodes, or "OLEDs." From those patents, the parties present roughly two (2) dozen disputes about the scope of terms or phrases. Having considered the parties' briefing, later filings submitted by the parties,[1] and arguments of counsel at a February 4, 2025 hearing, the Court resolves the disputes as follows.

## I. BACKGROUND

### A. U.S. Patent 6,949,389

U.S. Patent No. 6,949,389 (the "'389 Patent") relates to "encapsulation" of OLED devices.

[1] Samsung's Notice of Supplemental Evidence Re Claim Construction (Dkt. No. 256) and Pictiva's Response (Dkt. No. 276).

Encapsulation "protect[s] the OLED device from damaging environmental effects—primarily from oxygen or moisture." '389 Patent at 1:8–10. One type of encapsulation, "direct thin-film encapsulation," uses "alternating and repeating layers of an organic layer . . . and a barrier layer," which is called a "polymer multilayer," or PML. *Id.* at 1:20–22.

Figure 1 (below) shows "a typical PML encapsulation structure formed over an OLED device." '389 Patent at 3:20–21. A planarization layer 106 is formed on top of an OLED structure 104. *Id.* at 1:30–31. The planarization layer is an organic layer that provides a planar surface for the deposition of the PML structure 112a. *Id.* at 1:31–33. The PML structure 112a has a barrier layer 108 and another planarization layer 110. *Id.* at 1:34–35. The barrier layers "provide[] the necessary environmental isolation from the corrosive effects of oxygen and moisture." *Id.* at 1:38–40.

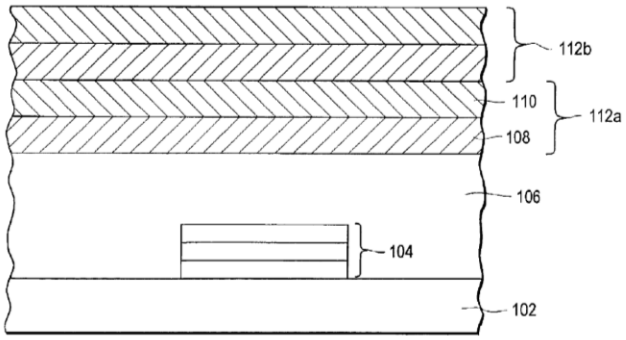


FIG. 1 (PRIOR ART)

Although direct thin film encapsulation provides cost-reduction, reliability, and structural benefits over other methods, '389 Patent at 1:48–50, the patent describes a few problems with the process. "One of the problems . . . occurs with the barrier layer," which "should ideally not contain any point defects (i.e. pin holes) in its surface—otherwise its usefulness as a barrier layer is severely compromised." '389 Patent at 1:56–60. Moreover, typical PML techniques cover the

electrical contact pads during the process, so "additional processing must be performed for removal of the PML structure over these areas." *Id.* at 2:17–23.

The patent addresses the additional-processing problem by, instead of a blanket deposition of a layer over many OLED devices on a single glass sheet, depositing at least one planarization layer in "a pattered manner," hardening the planarization layer in the regions covering the OLED devices, removing the planarization layer where it has not hardened, and selectively depositing the barrier layer over the hardened regions. *See* '389 Patent at [57].

The disputed terms concern Claims 34 and 41, which recite:

> 34. A method of encapsulating a plurality of devices fabricated upon a substrate, the steps of said method comprising:
>
> fabricating a plurality of devices on a substrate;
>
> **selectively depositing** at least one **planarization layer upon said devices**; and
>
> selectively depositing at least one barrier layer over said **planarization layer**.
>
> 41. A method of encapsulating a plurality of devices fabricated upon a substrate, the steps of said method comprising:
>
> fabricating a plurality of devices on a substrate;
>
> depositing a mask on top of said substrate, such that mask openings are placed on top of said devices;
>
> **depositing at least one planarization layer upon said mask and said plurality of devices**;
>
> **removing said mask from said substrate**; and
>
> **selectively depositing** at least one barrier layer over said planarization layer.

'389 Patent at 10:65–11:5, 11:26–36 (disputed terms in bold).

**B. U.S. Patent 8,341,547**

U.S. Patent No. 8,341,547 (the "'547 Patent") "relates to an optoelectronic device which can emit electromagnetic radiation during operation and has a desired color impression in the switched off state." '547 Patent at 1:13–15. Figures 1A and 1B (below) show an embodiment of the claimed device during operation and in the switched off state, respectively. The device has an organic layer sequence 1, which emits electromagnetic radiation 15 having a first wavelength spectrum during operation, and a structured layer 2 downstream of the organic layer sequence 1 and in the path of the radiation 15. The first region 2A has a wavelength conversion layer 3 that converts some of the radiation 15 into radiation 16 having a second wavelength spectrum. The second region 2B has a filter layer 4, which is opaque to radiation having a third wavelength spectrum, which corresponds to at least one part of the second wavelength spectrum. '547 Patent at [57].

FIG 1A

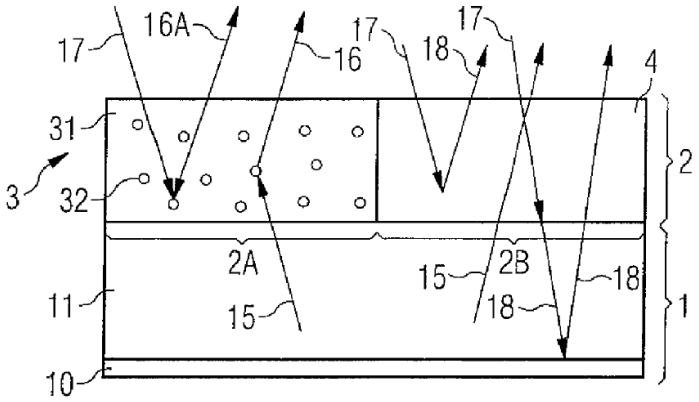

FIG 1B

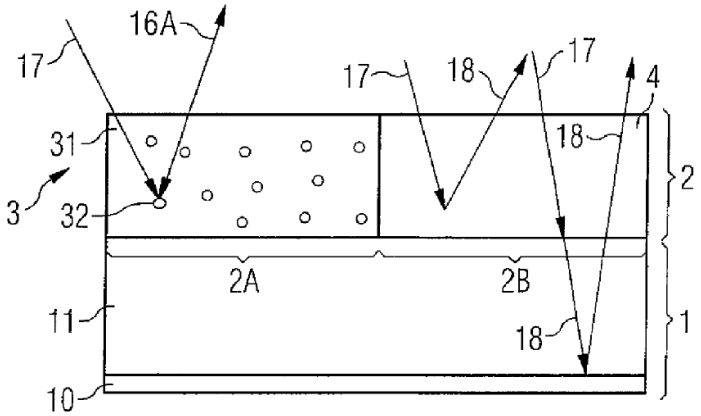


In the switched-off state shown in Figure 1B, radiation 17 is incident on the device from outside. The wavelength conversion layer 3 converts the radiation 17 into electromagnetic radiation 16A. The filter layer 4 filters the incident electromagnetic radiation 17 into radiation 18. Consequently, through combination of a yellowish portion of the electromagnetic radiation 16A and a bluish portion of the electromagnetic radiation 18, an observer of the device sees a whitish color impression in the switched-off state. ’547 Patent at 11:16–29.

The disputed terms from this patent relate to Claims 1 and 11. Claim 1 recites:

1. An optoelectronic device, comprising:

**an organic layer sequence which emits an electromagnetic radiation having a first wavelength spectrum during operation**; and

a structured layer disposed downstream of the organic layer sequence in a beam path of the electromagnetic radiation emitted by the organic layer sequence and including first and second regions;

wherein the first regions each include a wavelength conversion layer configured to convert at least partially electromagnetic radiation having a first wavelength spectrum into an electromagnetic radiation having a second wavelength spectrum;

wherein the second regions each include **a filter layer which is**

> **at least partially opaque to an electromagnetic radiation having a third wavelength spectrum which corresponds to at least one part of the second wavelength spectrum**;
>
> wherein the first and second regions of the structured layer are arranged laterally in a beam path of the optoelectronic device; and
>
> wherein **the filter layer is transparent to the electromagnetic radiation having the first wavelength spectrum**.

'547 Patent at 14:55–15:11 (disputed terms in bold). Claim 11, which depends from Claim 1, further requires "an encapsulation one of disposed upstream and disposed downstream of the structured layer in the beam path of the electromagnetic radiation emitted by the organic layer sequence." *Id.* at 16:21–24.

### C. U.S. Patent 8,558,223

U.S. Patent No. 8,558,223 (the "'223 Patent") explains that "[t]he electron conductivity in [an organic electronic] component is often the decisive variable for the efficiency and serviceable life of the component." '223 Patent at 1:25–27. The recombination of electrons and holes[2] in the component's highly conductive layer form excitons that causes substances to emit radiation. The luminescence of that radiation depends directly upon the exciton density, which in turn depends upon the recombination of electrons and holes. *Id.* at 1:28–32.

When purely crystalline layers are used as the highly conductive layer, they have regions of different conductivity. *Id.* at 1:23–35. Those regions may have non-uniform electron flow as charge carriers always select the path of least resistance. *Id.* at 1:38–40. Such non-uniformity can cause unwanted effects, such as overheating and damage at locations with elevated electron flow.

[2] In semiconductors, electrons are negatively charged particles, while a hole is the absence of an electron, which acts as a positively charged particle.

*Id*. Further, regions with higher electron flow emit more radiation and are brighter than regions with lower electron flow. *Id.* at 1:42–45.

The ’223 Patent teaches how to form an electron-conducting layer with more electrons than an electron-conducting layer that was not formed by using the method. “These electrons can be available for electron transportation in the organic electronic component.” ’223 Patent at 2:11–12. “By increasing the ‘free’ electrons, the electron conductivity in the component is significantly improved,” which “leads to an increase in efficiency and serviceable life” of the component.” *Id.* at 2:12–15.

Claim 1 recites:

> 1. An organic electronic component, comprising:
>
> a substrate,
>
> a first electrode,
>
> a second electrode,
>
> an electron-conducting layer which is arranged in such a way that it is electrically conductively connected to at least one of the electrodes,
>
> wherein the electron-conducting layer is obtained by joint vaporization of a **metal complex**, which comprises a central metal atom, with an organic compound, wherein the organic compound comprises a heteroaromatic compound which is conjugated with an aromatic compound via a C–C bond.

’223 Patent at 19:11–23 (disputed term in bold). “Metal complex” also appears in Claim 10, and the parties dispute the scope of various terms from certain dependent claims. Additionally, Samsung challenges some of those dependent claims as indefinite.

**D. U.S. Patent 8,723,164**

U.S. Patent No. 8,723,164 (the “’164 Patent”) relates to balancing the ratio of electrons to

holes in emission layers to optimize the device's efficiency. As the patent explains:

> Electronic devices, such as organic light-emitting diodes (OLEDs), consist of a sequence of several functional organic layers. Emission layers thereby have a matrix material, which is doped with emitter molecules. In the emission layer, excitons are formed by a recombination of electrons and "holes," which lead to light emission. In order to obtain a high efficiency of the electronic device, the ratio between electrons and "holes" which are transported in the emission layer is decisive. A nonbalanced ratio between hole and electron transport results in a low radiation efficiency of the device.

'164 Patent at 1:20–29.

The patent teaches a device that "has an improved charge carrier and an improved charge carrier balance in the organic functional layer, and an adaptable ratio between the hole and electron transport." '164 Patent at 2:1–4. The organic functional layer of the invention has first, second, and third matrix materials. Each of the three matrix materials has a Lowest Unoccupied Molecular Orbital (LUMO) and Highest Occupied Molecular Orbital (HOMO) that are limited relative to the LUMOs and HOMOs of the other layers. Specifically, each of the independent claims requires:

> at least one organic functional layer [that] has at least a first matrix material, a second matrix material, and a third matrix material, and the third matrix material has a Lowest Unoccupied Molecular Orbital (LUMO), which is energetically lower than the LUMO of the second matrix material and the LUMO of the first matrix material, and wherein the second matrix material has a Highest Occupied Molecular Orbital (HOMO), which is energetically higher than the HOMO of the first matrix material and the HOMO of the third matrix material . . . .

'164 Patent at 9:10–20 (Claim 1), 10:41–59 (Claim 16). "By the adjustment of the charge carrier mobility with the aid of the three matrix materials, it is possible to purposefully influence the position of the recombination zone," *id.* at 3:31–34, which increases the efficiency and service life of the device.

### E. U.S. Patent 9,257,492

U.S. Patent No. 9,257,492 (the "'492 Patent") teaches "a method for producing a passive electronic component." '492 Patent at 1:17–18. The disclosure focuses on applying various layers of the component "in a structured fashion," which "makes it possible . . . to dispense with the . . . planar application of the corresponding layers and subsequent complex structuring of the layers." *Id.* at 2:7–11. As the patent explains:

> [T]hat the dielectric and/or the electrode layer and/or subsequently further layers or materials are "applied in a structured fashion" means, in various embodiments, that the desired structure is already formed during the application of the corresponding layer. The area to be coated is thus coated only in partial regions dependent on the desired structure.
>
> This is in contrast to planar application of the corresponding layers and subsequent structuring of the layers, as is the case for example in a photolithographic method.

'492 Patent at 1:66–2:7.

Claim 1 recites:

> 1. A method for producing a **passive electronic component**, comprising:
>
> forming a first electrically conductive layer on a substrate,
>
> forming a second electrically conductive layer on the first electrically conductive layer,
>
> forming a first trench in the first and second electrically conductive layers such that the substrate is exposed in the first trench, wherein the first trench separates a first contact region from a second contact region,
>
> **applying a dielectric in a structured fashion** to the second electrically conductive layer in the first contact region and at least partly to the substrate in the first trench such that the dielectric electrically insulates the first contact region from the second contact region, and

> **applying an electrically conductive electrode layer in a structured fashion to the dielectric above the first contact region and to the second contact region**.

'492 Patent at 20:27–43 (disputed terms in bold).

### F. U.S. Patent 11,828,425

U.S. Patent No. 11,828,425 (the "'425 Patent") discloses an OLED with an organic layer sequence with a radiation-emitting region that generates electromagnetic radiation in the spectral range from infrared radiation to UV radiation during operation. The radiation exit area is structured to give the electromagnetic radiation a directional emission profile. The encapsulation seals the organic layer sequence against environmental influences. '425 Patent at [57].

The parties have only one dispute from the patent's claims, which relates to Claim 1:

> 1. A device comprising:
>
> an organic light-emitting diode comprising:
>
> an organic layer sequence,
>
> a radiation exit area, and
>
> an encapsulation,
>
> wherein the organic layer sequence and the encapsulation are disposed on a carrier,
>
> wherein **the organic layer sequence comprises at least one radiation-emitting region configured to generate electromagnetic radiation in a spectral range from infrared radiation to UV radiation during operation**,
>
> wherein the organic layer sequence comprises an electron transport layer that is n-doped; and
>
> wherein the organic layer sequence comprises an emission layer comprising an iridium-containing compound.

'425 Patent at 87:60–88:9 (disputed term in bold). Specifically, the dispute relates to whether the radiation-emitting region must be configured to generate radiation across the entire spectral range

between infrared and ultraviolet, or just somewhere within that range.

## II. LEGAL STANDARDS

### A. Generally

"[T]he claims of a patent define the invention to which the patentee is entitled the right to exclude." *Phillips v. AWH Corp.*, 415 F.3d 1303, 1312 (Fed. Cir. 2005) (*en banc*). As such, if the parties dispute the scope of the claims, the court must determine their meaning. *See, e.g.*, *Verizon Servs. Corp. v. Vonage Holdings Corp.*, 503 F.3d 1295, 1317 (Fed. Cir. 2007) (Gajarsa, J., concurring in part); *see also Markman v. Westview Instruments, Inc.*, 517 U.S. 370, 390 (1996), *aff'g,* 52 F.3d 967, 976 (Fed. Cir. 1995) (*en banc*).

Claim construction, however, "is not an obligatory exercise in redundancy." *U.S. Surgical Corp. v. Ethicon, Inc.*, 103 F.3d 1554, 1568 (Fed. Cir. 1997). Rather, "[c]laim construction is a matter of [resolving] disputed meanings and technical scope, to clarify and when necessary to explain what the patentee covered by the claims . . . ." *Id.* A court need not "repeat or restate every claim term in order to comply with the ruling that claim construction is for the court." *Id.*

When construing claims, "[t]here is a heavy presumption that claim terms are to be given their ordinary and customary meaning." *Aventis Pharm. Inc. v. Amino Chems. Ltd.*, 715 F.3d 1363, 1373 (Fed. Cir. 2013) (citing *Phillips,* 415 F.3d at 1312–13). Courts must therefore "look to the words of the claims themselves . . . to define the scope of the patented invention." *Id.* (citations omitted). The "ordinary and customary meaning of a claim term is the meaning that the term would have to a person of ordinary skill in the art in question at the time of the invention, *i.e.,* as of the effective filing date of the patent application." *Phillips*, 415 F.3d at 1313. This "person of ordinary skill in the art is deemed to read the claim term not only in the context of the particular claim in which the disputed term appears, but in the context of the entire patent, including the

specification." *Id.*

Intrinsic evidence is the primary resource for claim construction. *See Power-One, Inc. v. Artesyn Techs., Inc.*, 599 F.3d 1343, 1348 (Fed. Cir. 2010) (citing *Phillips*, 415 F.3d at 1312). For certain claim terms, "the ordinary meaning of claim language as understood by a person of skill in the art may be readily apparent even to lay judges, and claim construction in such cases involves little more than the application of the widely accepted meaning of commonly understood words." *Phillips*, 415 F.3d at 1314; *see also Medrad, Inc. v. MRI Devices Corp.*, 401 F.3d 1313, 1319 (Fed. Cir. 2005) ("We cannot look at the ordinary meaning of the term . . . in a vacuum. Rather, we must look at the ordinary meaning in the context of the written description and the prosecution history."). But for claim terms with less-apparent meanings, courts consider "those sources available to the public that show what a person of skill in the art would have understood disputed claim language to mean . . . [including] the words of the claims themselves, the remainder of the specification, the prosecution history, and extrinsic evidence concerning relevant scientific principles, the meaning of technical terms, and the state of the art." *Phillips*, 415 F.3d at 1314.

**B. Indefiniteness**

"[A] patent is invalid for indefiniteness if its claims, read in light of the specification delineating the patent, and the prosecution history, fail to inform, with reasonable certainty, those skilled in the art about the scope of the invention." *Nautilus, Inc. v. Biosig Instruments, Inc.*, 572 U.S. 898, 901 (2014). The claims "must be precise enough to afford clear notice of what is claimed" while recognizing that "some modicum of uncertainty" is inherent due to the limitations of language. *Id.* at 909. "Indefiniteness must be proven by clear and convincing evidence." *Sonix Tech. Co. v. Publ'ns Int'l, Ltd.*, 844 F.3d 1370, 1377 (Fed. Cir. 2017).

## III. THE LEVEL OF ORDINARY SKILL IN THE ART

The level of ordinary skill in the art is the skill level of a hypothetical person who is presumed to have known the relevant art at the time of the invention. *In re GPAC*, 57 F.3d 1573, 1579 (Fed. Cir. 1995). In resolving the appropriate level of ordinary skill, courts consider the types of and solutions to problems encountered in the art, the speed of innovation, the sophistication of the technology, and the education of workers active in the field. *Id.* Importantly, "[a] person of ordinary skill is also a person of ordinary creativity, not an automaton." *KSR Int'l Co. v. Teleflex Inc.*, 550 U.S. 398, 421 (2007).

Here, neither party addresses the level of ordinary skill in their briefing. Samsung's expert, however, sets forth the level of ordinary skill for each of the patents in his declaration. (Schubert Decl., Dkt. No. 143-1 ¶¶ 43–48). As Pictiva does not appear to dispute those characterizations, the Court adopts them for the purposes of construing the disputed terms.

## IV. THE DISPUTED TERMS

### A. "upon said devices" ('389 Patent, Claim 34); "upon said mask and said plurality of devices" ('389 Patent, Claim 41)

| Pictiva's Construction | Samsung's Construction |
|---|---|
| plain and ordinary meaning, i.e., "upon" means "directly or indirectly on" | "directly on said devices" / "directly on both said mask and said plurality of devices" |

Both claims recite "fabricating a plurality of devices on a substrate." '389 Patent at 11:1, 11:29. Claim 34 then requires "depositing at least one planarization layer *upon said devices*." *Id.* at 11:2–3. Similarly, Claim 41 requires "depositing at least one planarization layer *upon [a previously deposited] mask and said plurality devices*." *Id.* at 11:32–33. The parties dispute whether "upon" includes both "directly on" and "indirectly on."

Asserting that it does, Pictiva cites the specification's description of the prior art showing

an OLED structure formed "on top" of a substrate. (Dkt. No. 134 at 1 (citing '389 Patent at 1:23–47).) Pictiva also says "the patent describes a layer 'over the OLED devices' as being 'deposited upon the OLED devices.'" (Dkt. No. 150 at 1 (citing '389 Patent at 4:56–58).) Pictiva, however, does not proffer extrinsic evidence of a supposed "ordinary meaning" of "upon."

Samsung has two counters. First, the intrinsic record uses "upon" to mean "directly on" devices, while "over" more broadly includes "above, but not directly on." (Dkt. No. 143 at 1.) Second, during prosecution, the applicants disclaimed that "upon" could include "above, but not directly on" in arguments made to overcome U.S. Patent 5,703,433 (Fujii). (*Id.* at 2–3.)

Starting first with Samsung's disclaimer argument, Samsung points to the applicants' arguments in response to the examiner's assertion that Fujii discloses the step of "depositing at least one planarization layer upon said devices." (Dkt. No. 143-10 at 13.) The applicants traversed the assertion by arguing:

> In *Fujii,* the photoresist 4 is deposited on barrier ribs 2. . . . The barrier ribs 2 are not devices but rather, the barrier ribs 2 are insulating separators that separate plasma pixels. . . . In Applicant's specification at, for example, page 6, lines 29–31, devices are described as, for example, active areas on a substrate; in addition, on page 7, lines 3–5, devices are described as, e.g., an OLED display, an organic detector, or an organic solar cell. Since the photoresist 4 is deposited on the barrier ribs 2, *Fujii* does not disclose "depositing at least one planarization layer upon said devices" (underline added) as recited in claim 1.

(*Id.*)

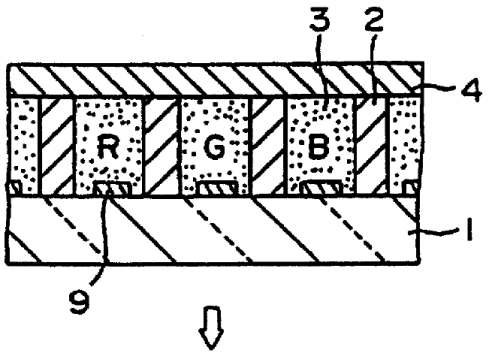

**FIG. 1B of Fujii showing substrate 1, barrier ribs 2, fluorescent substance 3, photoresist 4, and electrodes 9.**

This is not disclaimer as to the meaning of "upon." The applicants' argument was not related to the scope of "upon," but instead whether the "barrier ribs" were "devices." Thus, while this argument may affect the scope of "devices," it does not change the scope of "upon."

In Samsung's view, however, the applicants were arguing the photoresist 4 of Fujii was not in contact with the devices because the specification teaches that, before deposition of the planarization layer, "the fluorescent pastes 3 are dried so as to remove a solvent contained in an organic binder thereof." (Dkt. No. 143 at 2.) This means the volume of the paste has decreased leaving some space between photoresist and the paste. (*Id.* at 2–3.) According to Samsung's expert, Dr. Schubert, for example:

> a POSITA would understand that this evaporation step causes the paste, labeled as 3, to lose volume such that the substance after evaporation remains on the barrier ribs (2) and the substrate (1) but the substance no longer fills the discharge spaces (the cavities holding the material) up to the top of the cavities. Next, *Fujii* states: "Then, the substrate 1 is heated at a temperature in the range from 50° to 80° as shown in FIG. 1(b). Thereafter, a light-hardening type dry film (OSBR film made by Tokyo Ouka Kogyo Kabushiki Kaisha) is laminated on the substrate 1 as a photoresist 4."
>
> . . . Thus, while the applicable "planarization layer" in *Fujii* (the photoresist 4 in Figure 1B) is directly on the barrier ribs 2, it is not directly on the relevant "device" (components 3 and 9 together) because the substance labeled 3 does not fill the entire cavity that photoresist 4 covers.

(Schubert Decl., Dkt. No. 143-1 ¶¶ 51–52.)

Other passages from Fujii, not cited by Dr. Schubert, are consistent with his opinion that the paste 3 "does not fill the entire cavity that photoresist covers" after some shrinkage happens. For example, describing Figure 4(c) (below), the patent explains:

> [A]fter filling with each of the pastes of fluorescent substances 104, it is dried at a temperature of 170° C. During this drying step, the organic solvent of approximately 75% by volume is vaporized from each of the pastes of fluorescent substances 104. Thus, a fluorescent substance 105 for each color resides in a shape as shown in FIG. 5, the fluorescent substance 105 being composed of a mixture of a fluorescent material and a binder.

(U.S. Patent 5,703,433 (Fujii), Dkt. No. 143-11 at 7:56–63.)

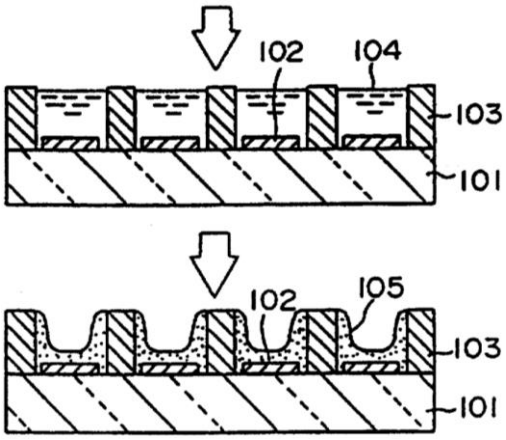


**FIGS. 4B (top) and 4C of Fujii. In FIG. 4B, cavities defined by barrier ribs 103 are filled with "pastes of fluorescent substances 104." As shown in FIG. 4C, after the pastes are dried, they decrease "approximately 75% by volume." (Fujii, Dkt. No. 155-11 at 8:42–63.)**

The problem with Samsung's position is that the applicants' arguments never referred to any empty space between the photoresist 4 and the paste 3 for why Fujii did not teach "depositing at least one planarization layer upon said devices." Nor did they refer to any empty space between the photoresist 4 and the pastes 3. Although the relevant Office Action is not in the record, it is at least equally likely that the examiner was asserting the barrier ribs were "devices." In fact, the applicant's arguments suggest as much by emphasizing the word "devices" in their response. To be sure, the applicants recognized the possibility that "the electrode 9 and the fluorescent substance 3 together *may* comprise a device" but stressed the barrier ribs 2 are not "devices." (Resp. to Office Action, Dkt. No. 134-10 at 13 (emphasis added).) In short, the applicants never had to make a

distinction between why the photoresist 4 was not "upon" the combination of the electrode 9 and the fluorescent substance 3. That is to say, Samsung's disclaimer position relies on an argument the applicants never made, which cannot be disclaimer.

The leaves the Court to determine the "ordinary meaning" of "upon" in light of the specification. To start, neither party presents evidence of whether the lay meaning of "upon" requires direct contact, but that seems unlikely. One would be hard-pressed to say, for example, a person is not "upon" a mattress when only a sheet separates that person from the mattress.

In fact, excerpts from the patent seem to suggest direct contact is not required. The Summary section, for example, describes an embodiment that includes the steps of first "fabricating a plurality of OLED devices on a substrate" and then "depositing *at least one planarization layer* upon said OLED devices." '389 Patent at 2:44–46. It would be difficult to deposit more than one planarization layer directly on the OLED devices. In its response, Samsung says "Fig. 6E and the related description show how multiple 'planarization layers' can, as a group, be directly on 'devices.'" (Dkt. No. at 143 at 2.) However, the Abstract and figure on the patent's first page suggest this language must also apply to Figure 3.

Samsung's other argument relates to the difference in the patent's usage between "upon" and "over." Stressing the presumption that "different terms in the claims connote[] different meanings," Samsung concludes that, because these are different terms, "upon" requires direct contact, but that is a leap to far. (Dkt. No. 143 at 1.) While the Court certainly agrees that "upon" and "over" have different meanings, that alone does not impose a requirement of direct contact with whatever's underneath.

"Upon" is a readily understandable term. Accordingly, the Court will give these terms "plain and ordinary meaning" constructions, but rejects that for a planarization layer to be "upon

said device" or "upon said mask and said plurality of devices" requires direct contact with the mask or devices.

### B. "planarization layer" ('389 Patent, Claims 34, 35, 41, 46)

| Pictiva's Construction | Samsung's Construction |
|---|---|
| plain and ordinary meaning, i.e., "a layer that can provide a planar surface" | "a layer of material that planarizes such that the propagation of defects from one layer to another layer is interrupted and the topography of the underlying layer is not reproduced" |

In their briefing, the parties mainly disputed the last part of Samsung's construction—whether a "planarization layer" must interrupt the propagation of defects from one layer to another. (Dkt. No. 134 at 4 (noting Pictiva's agreement that a "planarization layer" "provide[s] a more planar (or flatter) surface").) At the claim construction hearing, however, Pictiva indicated its agreement to Samsung's construction. (*See* Hr'g Tr., Dkt. No. 186 at 40:24–25.)

The intrinsic record supports that construction. In the prosecution history, for example, the applicants explained how metals reproduce the topography of the underlying layer, and therefore cannot be used as a "planarization layer." ('389 File History, Dkt. No. 143-10 at 16.) The applicants also distinguished a "sealing material 20" of U.S. Patent 6,590,157 because that material "it is not used to interrupt the propagation of defects from layer to another layer." ('389 File History, Dkt. No. 143-12 at 11.) This is consistent with the specification, which explains a barrier layer "should ideally not contain any point defects (i.e. pin holes) in its surface—otherwise its usefulness as a barrier layer is severely compromised. That is primarily the reason that a planar organic layer is typically used as a substrate upon which the barrier layer is deposited." ('389 Patent at 1:57–62; *see also id.* at 2:10–12 (describing the process as "primarily to avoid external partial/dirt-induced pinhole defects"); *id.* at 4:33–35 ("Such an organic layer might provide a planar structure on which

to deposit a barrier layer and to substantially cover point defects (e.g. dirt particles) in lower layers”).)

Given the parties’ agreement and the support provided by the record, the Court construes “planarization layer” as “a layer of material that planarizes such that the propagation of defects from one layer to another layer can be interrupted and the topography of the underlying layer is not reproduced.”[3]

### C. “selectively depositing” (’389 Patent, Claims 34, 35, 41)

| Pictiva’s Construction | Samsung’s Construction |
|---|---|
| plain and ordinary meaning, i.e., “depositing in a selective manner” | “depositing a material in only desired areas, such that no additional processing must be performed for removing unwanted material” |

This dispute concerns the effect of “selectively” on “depositing.” “The parties agree that ‘selectively depositing’ refers to depositing in only certain areas,” but dispute “whether the claims exclude ‘additional processing’ . . . for removing unwanted material.” (Dkt. No. 134 at 5.) Pictiva says “nothing in the embodiments . . . precludes a step of removing some remaining residual materials from the electrical contacts or other areas that should be free of encapsulation in the final assembly.” (Dkt. No. 134 at 5.) Samsung, however, alleges the patent uses “selectively depositing” “in contradistinction to techniques that involve deposition followed by subsequent removal.” (Dkt. No. 143 at 5.)

Pictiva has the better position. The patent merely differentiates between “batch” deposition,

[3] At the hearing, Samsung agreed to modify its proposed construction from “is interrupted” to “can be interrupted” “to try to better reflect the engineering principles” underlying the technology. (Hr’g Tr., Dkt. No. 186 at 35:1–8.)

where the entire surface is covered, and "selective" deposition, where less than the entire surface is covered. (*See* '389 Patent at 1:63–2:16 (explaining the problem with the barrier layer "is exacerbated during the batch fabrication" "where at least one UV-curable organic liquid material is deposited over the entire glass sheet containing the multiple OLED devices").) Nothing in the patent or prosecution history suggests "selectively depositing" excludes later removal of some of the deposited material. Accordingly, the Court construes this term as "depositing a material in desired areas."

### D. Order of Steps: "depositing at least one planarization layer upon said mask and said plurality of devices" and "removing said mask from said substrate" ('389 Patent, Claim 41)

| Pictiva's Construction | Samsung's Construction |
|---|---|
| The step of "removing said mask from said substrate" **need not be** after the step of "depositing at least one planarization layer upon said mask and said plurality of devices." | The step of "removing said mask from said substrate" **must be *after*** the step of "depositing at least one planarization layer upon said mask and said plurality of devices." |

Claim 41 of the '389 Patent recites:

> 41. A method of encapsulating a plurality of devices fabricated upon a substrate, the steps of said method comprising:
>
> fabricating a plurality of devices on a substrate;
>
> depositing a mask on top of said substrate, such that mask openings are placed on top of said devices,
>
> depositing at least one planarization layer upon said mask and said plurality of devices, removing said mask from said substrate; and
>
> selectively depositing at least one barrier layer over Said planarization layer.

'389 Patent at 11:26–36. Pictiva asserts that, because the "depositing" step can include depositing more than one layer, the "removing" step can come before the "depositing." (Dkt. No. 134 at 5–

6.) Even if true, the depositing step requires depositing any layers "upon said mask," which would be impossible if the mask were already removed from the substrate. Thus, as a matter of logic, the Court agrees with Samsung. *See Altiris, Inc. v. Symantec Corp.*, 318 F.3d 1363, 1369 (Fed. Cir. 2003) ("we look to the claim language to determine if, as a matter of logic or grammar, [steps] must be performed in the order written").

### E. "an organic layer sequence which emits an electromagnetic radiation having a first wavelength spectrum during operation" ('547 Patent, Claim 1)

| Pictiva's Construction | Samsung's Construction |
|---|---|
| plain and ordinary meaning, where, "a first wavelength spectrum" denotes a spectral distribution of electromagnetic radiation having a first spectral component(s) and relative intensities." No other parts require construction. | "an organic layer sequence which emits an electromagnetic radiation with a first wavelength spectrum which corresponds to the entire wavelength spectrum of the electromagnetic radiation emitted by the organic layer sequence during operation" (See Dkt. No. 176 at 2) |

The disputed phrase is the first limitation of Claim 1. In their briefing, the parties disputed (1) whether an "organic layer sequence" must include electrodes, and (2) the scope of the recited "first wavelength spectrum."

At the hearing, however, the parties reached agreement on the proper construction. Based on that agreement, the Court construes this phrase as "an organic layer sequence which emits an electromagnetic radiation with a first wavelength spectrum which corresponds to substantially the entire wavelength spectrum of the electromagnetic radiation emitted by the organic layer sequence during operation where substantially the entire wavelength spectrum refers to the entire wavelength spectrum emitted from the organic layer sequence except for the noise at the tail-end of the spectrum." (Hr'g, Tr., Dkt. No. 186 at 61:1–13.)

**F. "the filter layer is transparent to the electromagnetic radiation having the first wavelength spectrum" ('547 Patent, Claim 1)**

**"a filter layer which is at least partially opaque to an electromagnetic radiation having a third wavelength spectrum which corresponds to at least one part of the second wavelength spectrum" ('547 Patent, Claim 1)**

| Terms | Pictiva's Construction | Samsung's Construction |
|---|---|---|
| "the filter layer is transparent to the electromagnetic radiation having the first wavelength spectrum" | plain and ordinary meaning, where "transparent to an electromagnetic radiation having the first wavelength spectrum" means "permitting an electromagnetic radiation having the first wavelength spectrum to pass through substantially without alteration of its spectral components"; no other parts require construction. | "the filter layer is transparent to the electromagnetic radiation having the first entire wavelength spectrum so it permits an electromagnetic radiation having the first wavelength spectrum to pass through in as unimpeded manner as possible and substantially without alteration of its spectral components" (See Dkt. No. 176 at 2) |
| "a filter layer which is at least partially opaque to an electromagnetic radiation having a third wavelength spectrum which corresponds to at least one part of the second wavelength spectrum" | plain and ordinary meaning, i.e., where "at least partially opaque to an electromagnetic radiation" means "at least partially block an electromagnetic radiation"; and "second/third wavelength spectrum" means "spectral distribution of electromagnetic radiation having second/third spectral component(s) and relative intensities" | "a filter layer which is not transparent to an electromagnetic radiation having a third wavelength spectrum which corresponds to at least one part of the second wavelength spectrum" |

For these related phrases, the dispute in the briefing focused on the words "transparent" and "partially opaque." According to Samsung, "the '547 patent defines 'transparent' to mean the 'electromagnetic radiation 15 having a first wavelength that can pass through the filter layer 4 *in an unimpeded manner.*'" (Dkt. No. 143 at 8 (citing '547 Patent at 10:36–42).) Its only objection to

Pictiva's construction for "partially opaque" was that there is no difference in scope relative to its construction for "transparent." (*Id.* at 9.)

At the hearing, the parties announced they resolved these disputes. Based on that announcement, the Court construes:

(1) "transparent to the electromagnetic radiation having the first wavelength spectrum" as "permitting an electromagnetic radiation having the first wavelength spectrum to pass through in a substantially unimpeded manner and substantially without alteration to its spectral components," (Hr'g Tr., Dkt. No. 186 at 63:9–15); and

(2) "at least partially opaque to an electromagnetic radiation" as "at least partially block an electromagnetic radiation." (*Id.* at 63:18–21).

**G. "an encapsulation one of disposed upstream and disposed downstream" ('547 Patent, Claim 11)**

| Pictiva's Construction | Samsung's Construction |
|---|---|
| plain and ordinary meaning to a person of ordinary skill in the art in light of the specification, that is, "an encapsulation that is disposed either upstream or downstream of the structured layer in the beam path of the electromagnetic radiation emitted by the organic layer sequence" | Indefinite |

Claim 11, which depends from Claim 1, recites "an encapsulation one of disposed upstream and disposed downstream of the structured layer in the beam path of the electromagnetic radiation emitted by the organic layer sequence." '547 Patent at 16:21–24. Samsung asserts this claim is indefinite because it recites a structural impossibility. (Dkt. No. 143 at 10.) Specifically, it reads the claim as requiring an encapsulation that is both "upstream" and "downstream." (*Id.*) Pictiva replies the claim requires only one or the other. (Dkt. No. 150 at 4–5.)

The Court agrees with Pictiva. A claim that recites "one of A and B" requires either A *or* B, not both A *and* B, especially when (as Samsung alleges) the latter would be impossible. This is not, as Samsung suggests, a redrafting of the claim language. The claim is not indefinite on this basis, and the Court adopts Pictiva's construction for this term.

### H. "metal complex" ('223 Patent, Claim 1, 2, 10, 11, 13, 14)

| Pictiva's Construction | Samsung's Construction |
|---|---|
| Plain and ordinary meaning, i.e., "a compound containing one or more metal elements that co-ordinate to one or more non-metal elements, fragments or ions, excluding metal oxides" | "a metal complex that is not a compound composed of one or more metal atoms and one or more oxygen atoms" |

These claims require an "electron-conducting layer [that] is obtained by a joint vaporization of a metal complex and an organic compound." '223 Patent at 19:15–19; *see also id.* at 25:15–17 (similar). During prosecution, the examiner alleged U.S. Publication No. 2008/0258610 (Ikeda) anticipated Claim 1 in part because it disclosed a "metal complex." (Dkt. No. 143-14 at 13–14.) In their remarks, the applicants noted Ikeda discloses a metal *oxide* and then distinguished between a metal oxide and a metal complex:

> A person of ordinary skill in the art understands that a metal oxide is a compound composed of <u>one or more metal atoms **and** one or more oxygen atoms</u>.
>
> In direct contrast, Applicants assert that in the presently claimed application, the organic electronic layer is obtained by joint vaporation of a <u>metal complex, which comprises **a** central metal **atom,** with an organic compound</u>.

(*Id.* at 14 (all emphasis in original).)

The parties agree these statements amount to some prosecution-history disclaimer, but dispute the scope of that disclaimer. Samsung says the applicants defined "metal oxide" in the prosecution history as "a compound *composed of* one or more metal atoms and one or more oxygen

atoms." (Dkt. No. 143 at 10 (emphasis added).) Pictiva asserts "composed" is a closed term like "consisting," but Samsung asserts it means "consistently essentially of." (Dkt. No. 134 at 11; Dkt. No. 143 at 12–13.)

The real dispute seems to be whether "metal complex" excludes *any* compound that includes oxygen, and the problem is the overlap in the two "definitions" in the prosecution history. In its brief, for example, Pictiva shows a "rhodium complex" (below) with oxygen atoms in blue, and contends this is a "metal complex" despite the oxygen atoms because of the presence of carbon, but it would be excluded under Samsung's construction despite not being an metal *oxide*.

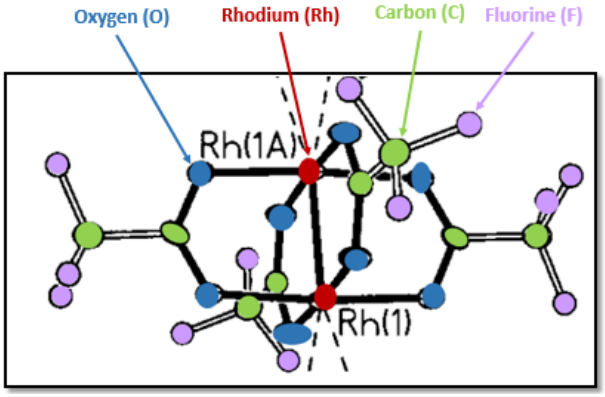


The Court finds too much imprecision to consider this disclaimer of the scope Samsung seeks. For one, Samsung's interpretation of "composing" as "consisting essentially of" just shifts the dispute to the scope of "essentially." Moreover, the "nested" nature of the supposed lexicography-within-disclaimer makes the scope of disclaimer unclear. The applicants intended to disclaim "metal oxides" from the scope of "metal complex," and they did so by describing "metal oxides" as compounds "composed of one or more metal atoms and one or more oxygen atoms." Because that's generally an accurate description, the Court adopts Pictiva's construction.

### I. "wherein the organic compound coordinates to the metal complex due to the joint vaporization" ('223 Patent, Claim 2)

| Pictiva's Construction | Samsung's Construction |
|---|---|
| plain and ordinary meaning, i.e., "wherein the organic compound coordinates to the metal complex attributable directly or indirectly to the joint vaporization" | "wherein the organic compound coordinates to the metal complex attributable directly to the joint vaporization"[4] |

Claim 1 recites "[a]n electron-conducting layer that is obtained by joint vaporization of a metal complex . . . with an organic compound." '223 Patent at 19:18–20. Claim 2, which depends from Claim 1, requires "the organic compound [to] coordinate[] to the metal complex *due to the joint vaporization*." *Id.* at 19:24–26 (emphasis added). The parties dispute the meaning of "due to the joint vaporization." *Id.* at 19:25–26.

In its briefing, Samsung asserted Pictiva's position "inverts causality" by not requiring the coordination to occur *after* the joint vaporization. (Dkt. No. 143 at 13.) Pictiva countered that Samsung's construction read "due to" out of the claim, thus removing any notion of a causal relationship between the "coordination" of the organic compound and vaporization. (Dkt. No. 134 at 13.) Pictiva also said Samsung's construction "requires coordination to occur in the gas phase even though the plain language [of the claim includes] no such restriction." (*Id.*)

The nature of this dispute changed after the briefing. Just before the hearing, Samsung changed its construction in a way that clarifies the dispute is whether coordination to the metal complex is only "directly attributable," or also "indirectly attributable," to the joint vaporization. (*See* Dkt. No. 176 at 2.) The parties agree "due to" requires causation, but Samsung says "due to"

[4] (Defs.' Amended Cl. Constr., Dkt. No. 176 at 2.) Samsung originally proposed a construction of "wherein the organic compound coordinates to the metal complex in the gas phase after the organic compound and the metal complex are jointly vaporized."

requires that causation to be "directly attributable to the joint vaporization." (Hr'g Tr., Dkt. No. 186 at 77:21–78–7.) Thus, says Samsung, "[t]here is one causation; it's the joint vaporization." (*Id.* at 78:1–2.)

Pictiva says "indirectly attributable" means joint vaporization is a necessary but possibly insufficient condition for the coordination to happen. (Hr'g Tr. Dkt. No. 186 at 75:8–12.) Put differently, some intervening events might need to happen. (*Id.* at 76:4–6.) Pictiva says the specification "gives pretty clear guidance as to what 'due to' means," which is that "the joint vaporization of the metal complex with the organic compound will result in interactions so that the compounds coordinate to each other." (*Id.* at 74:21–75:3.) "The coordination is *due to* the joint vaporization because the joint vaporization causes the two compounds to have interactions, and, therefore, they coordinate with each other." (*Id.* at 75:3–6 (emphasis added).)

Pictiva points to the patent's disclosure of coordination of molecules after they impinge on the surface of a film as an example of being "indirectly attributable" to the joint vaporization. (Hr'g Tr. Dkt. No. 186 at 75:17–76:1.) That portion of the patent explains:

> Because of the simultaneous vaporization of metal complexes and organic compounds, both compounds are simultaneously present next to each other in the gas phase. This enables the organic compound to coordinate to the metal complex in the gas phase. The coordination can be effected for example via a heteroaromatic compound in the organic compound. The coordination is also retained during the deposition of the electron-conducting layer.
>
> However, there is also the possibility that the metal complex and the organic compound meet each other first on the surface to be coated or when they impinge on the surface and the organic compound coordinates to the metal complex, whereupon electron-conducting layer is formed.
>
> . . .
>
> When the molecules impinge on the surface, they are still flexible to such an extent that the coordination sites meet each other and the corresponding energy

is released, which means that coordination can occur.

'223 Patent at 13:34–48. Pictiva calls the specification's description of coordination in the gas phase "directly attributable" to the joint vaporization, but the coordination after the molecules impinge on the surface "indirectly attributable" to the joint vaporization.

None of this provides any more clarity than simply relying on the lay meaning of "due to." For example, Samsung agrees the specification's disclosure of coordination of molecules after they impinge on a surface is "due to" the joint vaporization, but calls that "*directly* attributable" to the vaporization. (Hr'g Tr., Dkt. No. 186 at 80:4–12.) Thus, the parties not only disagree about what "due to" means, they disagree about the meaning of "directly attributable" and "indirectly attributable," so a construction that uses these terms appears unhelpful anyway.

Neither party presented any evidence of the lay meaning of "due to." The parties agree, however, that "due to" requires causality. (Dkt. No. 134 at 13 (noting Samsung's expert's "concession" that "due to" indicates a causal relationship); Dkt. No. 155 at 13 (accusing Pictiva's original construction of "inverting causality").) This comports with the Court's understanding of its lay meaning. *See Phillips*, 415 F.3d at 1314 (noting sometimes claim construction "involves little more than the application of the widely accepted meaning of commonly understood words"). Accordingly, the Court will give this term a "plain and ordinary meaning" construction. The Court, however, rejects that "due to" is nothing more than "a necessary but possibly insufficient condition," as Pictiva urged at the hearing, which would remove any notion of causality from the term's meaning. Building a foundation is a necessary-but-insufficient condition for a house, but building the foundation is not the cause of the house.

### J. "coordinate[s]" ('223 Patent, Claims 2, 11, 14)

| Pictiva's Construction | Samsung's Construction |
|---|---|
| plain and ordinary meaning, i.e., "have/has bonding interaction" | "form[s] a dative bond with" or, alternatively, "form[s] a chemical bond between two atoms in which a shared pair has been supplied by one of the two atoms" (See Dkt. No. 176 at 2) |

This dispute centers on whether this term requires a specific type of chemical bond between atoms. Samsung says "coordination" causes a chemical bond in which two electrons are donated by one of the atoms. (Dkt. No. 143 at 14 (citing *coordinate valence*, McGraw-Hill Dict. of Scientific & Tech. Terms, Dkt. No. 143-16 at 486 ("A chemical bond between two atoms in which a shared pair of electrons forms the pair has been supplied by one of the two atoms."); *coordination,* The New Oxford American Dict., Dkt. No. 143-17 at 375 ("the linking of atoms by coordinate bonds"); *id.* at 374–75 (defining "coordinate" as "form a coordinate bond to [an atom or molecule]" (brackets in original))).) These are also called "dative bonds."

In its briefing, Pictiva argued this term is not limited to dative bonds because "[t]he plain language of the claim places no restriction on how the organic molecule 'coordinate[s]' to the metal complex." (Dkt. No. 134 at 13–14.) It accused Samsung of importing the limitation from extrinsic evidence. (*Id*. at 14.)

Pictiva took a different approach at the hearing. Specifically, Pictiva argued Samsung's construction would exclude a disclosed embodiment. (Hr'g Tr., Dkt. No. 186 at 81:6–12 (noting a "dative bond is only one of the disclosed coordination mode[s]").) Pictiva explained that "we say it's coordinate when you have bonding interactions." (*Id.* at 81:13–14.)

The Court agrees with Samsung. Although Pictiva's briefing accuses Samsung of importing limitations, Pictiva never establishes the ordinary meaning of the term in the context of this

patent. Rather, it concludes, without persuasive evidence, that "coordination" can refer to any type of bond. Pictiva does cite a trio of exhibits but fails to explain how they support its position. (Dkt. No. 134 at 14). Moreover, even to the extent the patent discloses different types of bonds, the claims need not cover every disclosed embodiment.

In contrast, Samsung provides extrinsic evidence that shows "coordinates" has a specific meaning to a skilled artisan. While Pictiva properly notes "the claims do not restrict how the organic molecule 'coordinate[s]' to the metal complex," (Dkt. No. 150 at 6,) Samsung has shown "coordinates" provides that restriction. The Court therefore adopts Samsung's construction of "form[s] a chemical bond between two atoms in which a shared pair has been supplied by one of the two atoms."

### K. "chain-like structure" and "network-like structure" ('223 Patent, Claim 12)

| Term | Pictiva's Construction | Samsung's Construction |
|---|---|---|
| "chain-like structure" | Plain and ordinary meaning, i.e., "a structure that resembles a chain" | "a structure where two metal complexes are linked by an organic compound or a structure where two organic compounds are linked by a metal complex" |
| "network-like structure" | Plain and ordinary meaning, i.e., "a structure that resembles a network" | "a structure where more than two metal complexes are linked by an organic compound or a structure where more than two organic compounds are linked by a metal complex" |

Claim 10 recites "[a] method of manufacturing an organic electronic component . . . where the electron-conducting layer is deposited by means of simultaneous vaporization of a metal complex and an organic compound . . . ." '223 Patent at 25:8–9. Claim 12 further requires "the electron-conducting layer [to be] deposited as a chain-like or network-like structure." *Id.* at 26:7–9.

The parties dispute the meaning of "chain-like or network-like structure." Samsung asserts there is no ordinary meaning for these terms, but the patent defines them. (Dkt. No. 143 at 15–16.) Pictiva objects that Samsung's constructions would incorrectly make "chain-like structures" and "network-like structures" mutually exclusive, and that Samsung's constructions would exclude disclosed embodiments. (Dkt. No. 134 at 15–16.)

The best intrinsic evidence of the meaning of these terms comes from Column 11:

> In an embodiment of the organic electronic component, at least parts of the organic compounds bridge two metal complexes together, so that a chain-like structure is formed and/or at least parts of the organic compounds bridge more than two metal complexes together, so that a network-like structure is formed.

'223 Patent at 11:11–16. Accordingly, the Court construes:

- "chain-like structure" as "a structure in which at least parts of organic compounds bridge exactly two metal complexes together"; and
- "network-like structure" as "a structure in which at least parts of organic compounds bridge more than two metal complexes together."

### L. "degree of cross-linking of the electron-conducting layer" ('223 Patent, Claim 13)

| Pictiva's Construction | Samsung's Construction |
|---|---|
| plain and ordinary meaning, i.e., "the extent of cross-linking in the electron-conducting layer" | Indefinite |

Claim 13 recites "[a] method for manufacturing an organic electronic component," '223 Patent at 25:8–9, "wherein the degree of cross-linking of the electron-conducting layer is controlled by the ratio between the metal complex and the organic compound during vaporization," *id.* at 26:10–13. Samsung says "degree of cross-linking" is indefinite for two reasons: (1) it is unclear what is being cross-linked; and (2) the phrase is a term of degree, and the patent provides

no guidance for how to measure the degree. (Dkt. No. 143 at 16–17.)

This term is not indefinite. "[T]he term "cross-linking" standing alone has a well-established meaning in chemistry, and refers to the formation of chemical bonds that connect one polymer chain to another." (Schubert Decl., Dkt. No. 143-1 at 53.) In the context of the patent, a skilled artisan would understand "cross-linking" as referring to the formation of chemical bonds that connect the metal complex to the organic compound. That process is what forms the network-like or chain-like structures. *See* '223 Patent at 13:65–67 ("The degree of cross-linking and *thus the formation* of network-like or chain-like structures can be controlled by the ratio of metal complex to organic compound." (emphasis added)). As for Samsung's term-of-degree argument, infringement does not depend on the degree of cross-linking. Rather, infringement depends on how the degree of cross-linking is controlled. Accordingly, the Court construes this term as "degree of linking between the metal complex and the organic compound in the electron-conducting layer."

**M. "matrix" / "matrix material" ('164 Patent, Claims 1–6, 10, 13–16)**

| Pictiva's Construction | Samsung's Construction |
|---|---|
| "matrix material": plain and ordinary meaning, i.e., a material that forms a continuous phase | matrix: "a continuous phase of the mixture of matrix materials"<br>matrix material: "The first, second, and third matrix materials are different materials and are part of the same matrix" |

This dispute relates more to "matrix material" than to "matrix," which doesn't appear in isolation in the claims. Moreover, the dispute is about the structure of the claims rather than what a "matrix material" is. Each of the independent claims recites:

> at least one organic functional layer; and
>
> a second electrode, wherein the at least one organic functional layer is located between the first electrode and the second electrode,

> and wherein the at least one organic functional layer has at least a first matrix material, a second matrix material, and a third matrix material . . .

'164 Patent at 9:7–12 (Claim 1); *see also id.* at 10:21–26 (Claim 15); *id.* at 10:44–49 (Claim 10).

Samsung reads this language as requiring the first, second, and third matrix material to all be part of the same "organic functional layer." It points to the specification's explanation that a matrix "has at least three matrix materials" and asserts the invention would not work unless those matrix materials are in the same matrix so they can interact. (Dkt. No. 143 at 20 (citing '164 Patent at 4:24–26).) However, Pictiva relies on "patent parlance" and reads this language as meaning each layer of the "at least one layer" could have just one matrix material and meet the limitation. (Dkt. No. 134 at 18.) Pictiva also asserts the specification discloses an embodiment in which the three matrix materials are spread across multiple layers, and that Samsung's expert admits as much. (*Id.* at 18 (citing '164 Patent at 4:16–28, Schubert Depo. Tr., Dkt. No. 134-8 at 102:1–5).)

Nothing in the claim language suggests the applicants were trying to recite that the first, second, and third matrix materials belong to a group of multiple layers. Had that been their intent, it would have been easier to leave "organic functional layer" out of the claim entirely and just recite matrix materials. Also, because "a" and "an" normally means "one or more," *Baldwin Graphic Sys., Inc. v. Siebert, Inc.*, 512 F.3d 1338, 1342 (Fed. Cir. 2008) ("That 'a' or 'an' can mean 'one or more' is best described as a rule"), Claim 1's language as drafted is substantively no different than reciting:

> ~~at least one~~ <u>an</u> organic functional layer; and
>
> a second electrode, wherein the ~~at least one~~ organic functional layer is located between the first electrode and the second electrode, and wherein the ~~at least one~~ organic functional layer has at least a first matrix material, a second matrix material, and a third matrix material . . . .

This aligns with Samsung's construction.

The Court also disagrees with Pictiva that the specification discloses embodiments in which one matrix material exists in each of three different layers. Pictiva points to the description of Figure 3, which explains "[b]oth the emission layer 30 and also the electron transport layer 32 and the hole transport layer 31 can have matrices which are composed of three or more matrix materials." '164 Patent at 6:54–65. However, Plaintiff's citation supports Samsung's position by stating each layer can have a matrix that itself has at least three matrix materials, not that a group of three layers is collectively "composed of three or more matrix materials." That interpretation of this part of the specification is also consistent with the Abstract, which refers to "[t]he organic functional layer compris[ing] a first, a second, and a third matrix material." *See* '164 Patent at [57].

Pictiva also points to the first full paragraph of Column 5, which explains that, "[b]y the adjustment of the charge carrier mobility with the aid of the three matrix materials, it is possible to purposefully influence the position of the recombination zone in an emission layer. The recombination zone can be thereby distributed within one layer or over several layers." '164 Patent at 5:3–7. Pictiva focuses on the phrase "or over several layers," but that's consistent with Samsung's position that each of the layers can have a matrix with first, second, and third matrix materials.

The Court also struggles to see how Dr. Schubert's testimony supports Pictiva's position. At most, he testifies that there can be multiple emission layers, which Samsung does not dispute. (Schubert Depo. Tr., Dkt. No. 134-8 at 109:10–12.) He also says that "[i]n one organic functional layer, there is based on [his] understanding one matrix." (*Id.* at 107:7–8.) But that doesn't speak to whether the claim requires at least three matrix materials in that one matrix.

Having found that the most natural reading of the claim language supports Samsung's position, and that the intrinsic record does not suggest or support an alternative reading, the Court

adopts Samsung's construction for "matrix material."

### N. "charge carrier mobility" ('164 Patent, Claims 4, 16)

| Pictiva's Construction | Samsung's Construction |
|---|---|
| plain and ordinary meaning, i.e., hole mobility (for a hole transport material) and/or electron mobility (for an electron transport material) | Indefinite |

Both claims recite "wherein the first matrix material has a charge carrier mobility which is lower than the charge carrier mobilities of the second and third matrix materials." '164 Patent at 9:34–37; *id.* at 10:58–60. Samsung asserts the "mobility" of a material cannot be compared to the "mobility" of another material in the abstract, because "mobility varies according to temperature, humidity, dopants, and other factors." (Dkt. No. 143 at 21.) Pictiva, however, says a skilled artisan would understand any meaningful comparison of two materials would mean comparing them under substantially the same conditions. (Dkt. No. 134 at 21–22.)

Samsung's position also turns on the difference between measuring a sample of a material verses measuring the material. Specifically, it says "the variance in mobility per sample prevents a comparative measurement." (Dkt. No. 143 at 22.) But the patent explains mobility depends on the *average* distance between charge carrier-transporting molecules in the materials, '164 Patent at 3:17–20, and that a solid-state body is "built up" using a formula provided Miller and Abraham in column 3, *id.* at 38–40.

Samsung's complaints relate more to enablement than claim-construction. Because the meaning of the term is clear, the Court holds "charge carrier mobility" is not indefinite and will adopt Pictiva's construction.

### O. "A method for the production of an electronic device according to claim 1, comprising the steps of:" ('164 Patent, Claim 13)

| Pictiva's Construction | Samsung's Construction |
|---|---|
| plain and ordinary meaning, i.e., "a method for producing an electronic device that has the properties according to claim 1, the method of production includes, but is not limited to, the steps of . . . " "properties according to" means "characteristics described in" | Indefinite |

Claim 1 recites "[a]n electronic device, comprising: a substrate; a first electrode; at least one organic functional layer; and a second electrode . . . .'164 Patent at 9:4–22. Claim 13 recites:

> 13. A method for the production of an electronic device according to claim 1, comprising the steps of:
>
> A) preparation of a substrate;
>
> B) preparation of a first electrode and a second electrode; and
>
> C) placement of at least one organic functional layer between the first electrode and the second electrode,
>
> wherein in method step C), at least the first matrix material, the second matrix material, and the third matrix material are simultaneously applied.

*Id.* at 10:4–13. Samsung contends Claim 13 is an invalid mixed-class claim or, alternatively, a product-by-process claim. (Dkt. No. 143 at 22.)

The Court disagrees. Despite its reference back to Claim 1, Claim 13 is clearly a method claim directed to producing a device with all the limitations of Claim 1. Because Samsung has not shown the scope of the claim is uncertain, the Court will give it a "plain and ordinary meaning" construction.

### P. "applied in a structured fashion" and "applying . . . in a structured fashion" ('492 Patent, Claims 1, 9, 10, 16)

| Pictiva's Construction | Samsung's Construction |
|---|---|
| Plain and ordinary meaning, i.e., with "applied in a structure fashion" as described in '492 Patent at 1:66–2:4. | "The fact that the dielectric and/or the electrode layer and/or subsequently further layers or materials are 'applied in a structured fashion' means, in various embodiments, that the desired structure is already formed during the application of the corresponding layer. The area to be coated is thus coated only in partial regions dependent on the desired structure.<br>This is in contrast to planar application of the corresponding layers and subsequent structuring of the layers, as is the case for a photolithographic method." *See* 1:66–2:7. |

The dispute centers on the second part of Samsung's construction, which Pictiva considers an unjustified negative limitation. (Dkt. No. 134 at 23.) Samsung, however, asserts lexicography that excludes application in a "photolithographic method." (Dkt. No. 143 at 23.) The parties point to the same language from the specification:

> The fact that the dielectric and/or the electrode layer and/or subsequently further layers or materials are "applied in a structured fashion" means, in various embodiments, that the desired structure is already formed during the application of the corresponding layer. The area to be coated is thus coated only in partial regions dependent on the desired structure.
>
> This is in contrast to planar application of the corresponding layers and subsequent structuring of the layers, as is the case for example in a photolithographic method.

'492 Patent at 1:66–2:7.

The Court agrees with Pictiva about the last part of Samsung's construction. The record is not sufficiently developed about the scope of "photolithographic methods" to warrant a blanket

exclusion of those methods from the scope of this claim. Although the patent distinguishes between "applying in a structured fashion" and "application of the corresponding layers and *subsequent* structuring of the layers," the Court declines to adopt that part of Samsung's construction as superfluous. If the adopted construction requires the desired structure to be already formed, that implicitly excludes "subsequent structuring." Accordingly, the Court construes "[applied/applying] in a structured fashion" as "[applied/applying] such that the desired structure is already formed during the application of the corresponding layer."

**Q. "optoelectronic component" ('492 Patent, Claim 10); "passive electronic component" ('492 Patent, Claim 1, 10, 16)**

| Term | Pictiva's Construction | Samsung's Construction |
|---|---|---|
| "optoelectronic component" | Plain and ordinary meaning, i.e., an electrical or electronic component for detecting, sensing, generating, interconverting, modulating, transmitting, responding to, controlling or otherwise interacting with light or optical signals | "an electrical or electronic component that converts optical energy into electrical energy, converts electrical energy into optical energy, or both" |
| "passive electronic component" | For claims 1 and 16, the preamble is not limiting; For claim 10, plain and ordinary meaning, i.e., "an electronic component that is not active" | "an electronic component, such as a capacitor or a resistor, that is neither active nor an optoelectronic component"; phrase is limiting to the extent it is in a preamble |

The disputes about these terms are related, so the Court will address them together. Those disputes concern two different issues: (1) the extent of allowable overlap, if any, between an "optoelectronic component" and a "passive electronic component," and (2) whether the preambles of Claims 1 and 16 are limiting.

*1. The extent of overlap, if any, between an "optoelectronic component" and a "passive electronic component"*

Resolving this issue turns on whether an "optoelectronic component" can be a "passive" component. If it cannot, then these terms have mutually exclusive scope because both parties agree a "passive component" is not an active component. But while the parties generally agree on what an "optoelectronic component" does, they are vague on whether it can be passive.

More generally, they are vague and sometimes inconsistent on what makes a component "active" or "passive." During the hearing, for example, Samsung characterized a device that converts optical energy into electrical energy or vice versa as "active," but had no support for that assertion. (*See* Hr'g Tr., Dkt. No. 186 at 114:13–23.) That position somewhat conflicts with Samsung's proposed construction for "passive electronic component," because there would be no need for Samsung's separate carve out from "that is [not] active." Additionally, Pictiva has not taken an affirmative position on this question. (*See* Dkt. No. 134 at 25–26 ("To the extent that Samsung argues that a passive electronic element inherently excludes optoelectronic components, then that would be covered by the plain meaning of 'passive electronic component' and there is no need for the negative limitation.").)

Ultimately, the Court puts the burden on Samsung, who never addresses the question directly. Faced with Pictiva's suggestion that an optoelectronic component could be passive, Samsung only responds that "Plaintiffs seek to evade the distinction between the terms by asserting that a passive electronic component can be an optoelectronic component." (Dkt. No. 134 at 25; Dkt. No. 143 at 24.) Samsung then blames the patent for failing to provide any examples or description of the overlap of the terms. (*Id.*) But this was Samsung's opportunity to establish that overlap or non-overlap with extrinsic evidence, and Samsung passed on that opportunity.

The Court concludes an "optoelectronic component" can be either an active or passive device. As such the two disputed terms have different scope, but one type of component could meet either the "passive electronic component" or "optoelectronic component" of the same claim—much like a car could be both an automobile and a vehicle. That does not mean, however, that one device of that type could meet both claim limitations. *See Becton, Dickinson & Co. v. Tyco Healthcare Grp., LP*, 616 F.3d 1249, 1254 (Fed. Cir. 2010) ("Where a claim lists elements separately, 'the clear implication of the claim language' is that those elements are 'distinct component[s]' of the patented invention." (quoting *Gaus v. Conair Corp.*, 363 F.3d 1284, 1288 (Fed. Cir. 2004)); *see also Engel Indus., Inc. v. Lockformer Co.*, 96 F.3d 1398, 1404–05 (Fed. Cir. 1996) (concluding that where a claim provides for two separate elements, a "second portion" and a "return portion," these two elements "logically cannot be one and the same"). Pictiva acknowledges as much. (*See* Dkt. No. 134 at 26 (suggesting it would take two components of the same type to meet two different limitations).)

*2. Whether the preambles of Claims 1 and 16 are limiting*

The Court finds the preamble of Claim 1 to be limiting. Claim 1 is a method claim, "[a]nd what a method does is usually recited in its preamble. Accordingly, our claim construction analysis of statements of intended purpose in methods of using apparatuses or compositions has tended to result in a conclusion that such preamble language is limiting." *Eli Lilly & Co. v. Teva Pharm. Int'l GmbH*, 8 F.4th 1331, 1341 (Fed. Cir. 2021) (citing cases). Moreover, the patent is direct to producing a passive electronic component, '492 Patent at [54] ("Method for Producing a Passive Electronic Component"), [57] ("Various embodiments may relate to a method for producing a passive electronic component"), so the preamble gives life and meaning to the claim.

Claim 16's preamble is also limiting. The parties agree that "active" and "passive"

electronic components are mutually exclusive. They also agree the limitations in the body of the claim could read on either active or passive components. The key difference between active and passive components, however, is not found in the body of the claim. Given that, the preamble's recitation of "passive electronic component" imposes a requirement not found in the body of the claim, and gives it life and meaning.

* * *

Because the parties generally agree on the meaning of "optoelectronic component," the Court will give that term a "plain and ordinary meaning" construction. Holding that an "optoelectronic component" could be either active or passive is sufficient to resolve the dispute. The Court also holds the preambles of Claims 1 and 16 are limiting.

**R. "a plurality of capacitors and/or resistors" ('492 Patent, Claim 6)**

| Pictiva's Construction | Samsung's Construction |
|---|---|
| Plain and ordinary meaning, i.e., "more than one capacitor and/or resistor" | Indefinite |

Claim 6 recites "[t]he method as claimed in claim 2, wherein a plurality of capacitors and/or resistors are formed electrically in parallel with one another and/or electrically in series one after another." '492 Patent at 20:64–67. Samsung says this claim is indefinite because the claims from which it depends "do not describe how a resistor is to be formed." (Dkt. No. 143 at 25.) But according to Pictiva, "Claim 6 merely specifies how the resulting plurality of resistors and/or capacitors are to be electrically connected/formed." (Dkt. No. 150 at 26.)

Samsung's challenge—that the claims don't describe how a resister is to be formed—show this is an enablement problem, not a claim-construction dispute. Because there is no dispute over the meaning of capacitor or resister, the Court will give this phrase a "plain and ordinary meaning"

construction.

### S. "a resistance region . . . which has a taper in a direction parallel to the electrically conductive layers" ('492 Patent, Claim 3)

| Pictiva's Construction | Samsung's Construction |
|---|---|
| plain and ordinary meaning, i.e., "a resistance region which has a shape that gradually narrows in a direction parallel to the electrically conductive layers" | Indefinite |

This dispute implicates Claim 1 and Claim 3. Claim 1 recites:

> 1. A method for producing a passive electronic component, comprising:
>
> forming a first electrically conductive layer on a substrate,
>
> forming a second electrically conductive layer on the first electrically conductive layer,
>
> forming a first trench in the first and second electrically conductive layers such that the substrate is exposed in the first trench, wherein the first trench separates a first contact region from a second contact region,
>
> applying a dielectric in a structured fashion to the second electrically conductive layer in the first contact region and at least partly to the substrate in the first trench such that the dielectric electrically insulates the first contact region from the second contact region, and
>
> *applying an electrically conductive electrode layer in a structured fashion to the dielectric above the first contact region and to the second contact region.*

'492 Patent at 20:27–43 (emphasis). Claim 3 then recites:

> 3. The method as claimed in claim 1, wherein, before the dielectric is applied, a second trench and at least one third trench are formed, which delimit a resistance region, which comprises a part of the first and second electrically conductive layers and *which has a taper in a direction parallel to the electrically conductive layers* and which leads into the first contact region on a

first side of the taper.

*Id.* at 20:49–55 (emphasis added).

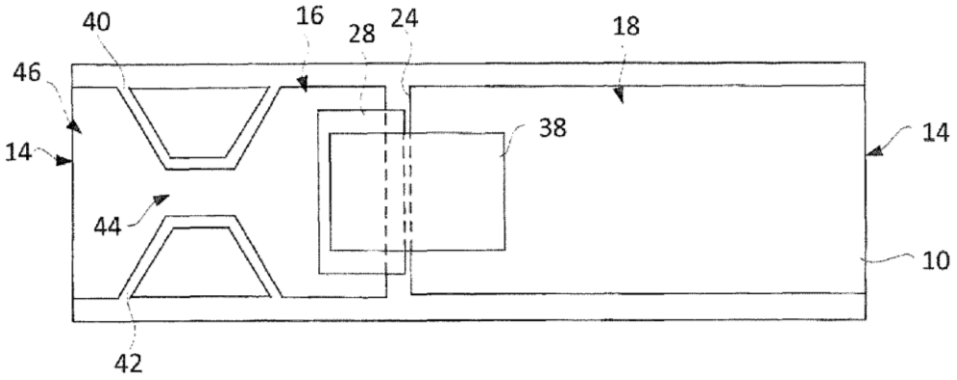


**FIG. 9 of the '492 Patent**

Figure 9 (above) of the patent, which is a plan view, shows an embodiment of the claimed passive electronic component. The component has a second and third trench (40, 42) that expose the substrate 10 and define a tapered resistance region (44). The resistance region leads into a first and third contact regions (16, 46).

Citing *Bicon, Inc. v. Staumann Co.*, 441 F.3d 945, 950 (Fed. Cir. 2006), Samsung argues that because all possible taper directions would satisfy the disputed phrase, the limitation is superfluous and therefore invalid. (Dkt. No. 143 at 26.) Pictiva does not dispute that all possible taper directions would satisfy this language, but stresses that Samsung never argues the meaning of the term is unclear. (Dkt. No. 150 at 9.)

The Court agrees with Pictiva. Even if all possible taper directions would satisfy this language, Samsung does not cite authority that says a claim limitation met by any potential accused device renders the language superfluous.[5] Regardless, the Court gives this term its "plain and

[5] In *Bicon*, the claim at issue recited "[a]n emergence cuff member for use in preserving the interdental papilla during the procedure of placing an abutment on a root member implanted in the

ordinary meaning" as there is no dispute over the meaning of the language.

### T. "second trench" and "third trench" ('492 Patent, Claim 3)

| Pictiva's Construction | Samsung's Construction |
|---|---|
| plain and ordinary meaning | "second trench in the first or second electrically conductive layer, or in both such layers"<br>"third trench in the first or second electrically conductive layer, or in both such layers" |

Claim 1 recites:

> forming a first trench in the first and second electrically conductive layers such that the substrate is exposed in the first trench, wherein the first trench separates a first contact region from a second contact region, [and]
>
> applying a dielectric in a structured fashion to the second electrically conductive layer in the first contact region and at least partly to the substrate in the first trench such that the dielectric electrically insulates the first contact region from the second contact region[.]

'492 Patent at 20:32–40. Claim 3 then recites:

> 3. The method as claimed in claim 1, wherein, before the dielectric is applied, a second trench and at least one third trench are formed, which delimit a resistance region, which comprises a part of the first and second electrically conductive layers and which has a taper in a direction parallel to the electrically conductive layers and which leads into the first contact region on a first side of the taper.

*Id*. at 20:49–55.

---

alveolar bone of a patient in which the abutment has a frusto-spherical basal surface portion." *Bicon*, 441 F.3d at 948. The patentee asserted the "the claim is in no way limited by the abutment," and the preamble "in no way limits the claim because it merely sets forth the purpose or use of the emergence cuff." *Id.* at 949. Thus, the dispute was thus about whether the preamble was limiting as a statement of intended purpose—not whether it was a structural limitation of the claim.

The parties dispute whether the "second trench" and "third trench" of Claim 3 must be formed in the first or second electrically conductive layers recited in Claim 1. According to Pictiva, nothing in the claim language requires that, and Claim 1 is open-ended, so forming the second and third trenches could be done in unrecited steps. (Dkt. No. 134 at 27; Dkt. No. 150 at 9.) Samsung responds that the second and third trenches must be formed in either or both recited layers because those are the only material recited in the claim in which trenches could be formed. (Dkt. No. 143 at 27.)

The Court agrees with Samsung for three reasons. First, as Samsung notes, the claim provides no other layer into which the second and third trench could be formed. While not dispositive, a skilled artisan would consider that when reading the claim, and not conclude the second and third trenches might be formed in some other, unrecited material layer. Second, Claim 3 requires the second and third trenches to be formed *before* Claim 1's step of applying the dielectric, which also suggests the trenches relate to the same layer over which the dielectric is applied in Claim 1. Finally, the second and third trench "delimit a resistance region" in the layers, which suggests the second and third trenches must also be in the first and second electrically conductive layers. Accordingly, the Court adopts Samsung's constructions for these terms.

**U. "applying an electrically conductive electrode layer in a structured fashion to the dielectric above the first contact region and to the second contact region"**

**"an electrically conductive electrode layer, which is applied in a structured fashion to the dielectric above the first contact region and to the second contact region"**

**"an electrically conductive electrode layer, which is applied in a structured fashion on the dielectric above the first contact region and at least partly on the second contact region" ('492 Patent, Claims 1, 10, 16)**

| Pictiva's Construction | Samsung's Construction |
|---|---|

| | |
|---|---|
| plain and ordinary meaning to a person of ordinary skill in the art in light of the specification, with "applying . . . in a structured fashion" as construed above; no other parts require construction.<br>plain and ordinary meaning to a person of ordinary skill in the art in light of the specification, with "applied . . . in a structured fashion" as construed above; no other parts require construction.<br>plain and ordinary meaning to a person of ordinary skill in the art in light of the specification, with "applied . . . in a structured fashion" as construed above; no other parts require construction. | "applying an electrically conductive electrode layer in a structured fashion to the dielectric above, and insulated from, the first contact region, and to the second contact region"<br>"an electrically conductive electrode layer, which is applied in a structured fashion to the dielectric above, and insulated from, the first contact region, and to the second contact region"<br>"an electrically conductive electrode layer, which is applied in a structured fashion on the dielectric above, and insulated from, the first contact region, and at least partly on the second contact region" |

Samsung argues these phrases require application of the electrode in "distinct ways" with respect to the first and second contact regions and, as a result, the electrode layer must be insulated from the first contact region. (Dkt. No. 143 at 27–28.) Samsung walks through its reasoning based on FIG. 7, and then concludes "[a] POSITA would understand the claims this way because applying the electrode layer in a structured fashion 'to the dielectric above' the first contact region would effectuate the claims . . . only if the electrode layer remains insulated from the first contact region." (*Id.*) In its view, Pictiva's construction would render the claims inoperable and "evade[s] the distinction between applying 'to' and applying 'to the dielectric above.'" (*Id.*)

Samsung takes a backwards approach. Rather than disputing the scope of claim terms, Samsung argues that the claims must require the dielectric to be insulated from the first contact region as this is the only way that this limitation can be met. In the end, Samsung may be right, but it raises an infringement question, not one of claim construction. The Court rejects that approach and will give this term a "plain and ordinary meaning" construction.

### V. "the organic layer sequence comprises at least one radiation-emitting region configured to generate electromagnetic radiation in a spectral range from infrared radiation to UV radiation during operation" ('425 Patent, Claim 1)

| Pictiva's Construction | Samsung's Construction |
|---|---|
| plain and ordinary meaning, where "electromagnetic radiation in a spectral range from infrared radiation to UV radiation" refers to electromagnetic radiation having a spectrum of wavelengths that fall anywhere within the spectral range from a wavelength in the infrared radiation range to a wavelength in the UV radiation; no other terms require construction. | "the organic layer sequence comprises at least one radiation-emitting region configured to generate electromagnetic radiation in a spectral range that includes the full spectrum from infrared radiation to UV radiation during operation" |

Samsung frames what it calls "the sole dispute" as whether this limitation requires the generation of electromagnetic radiation in "[1] the full spectrum from infrared radiation to UV radiation or [2] only one wavelength within this range." (Dkt. No. 143 at 29.) Arguing for the former, Samsung relies mainly on the claim language, noting the claim does not state that the range is "between" the IR and UV wavelengths and Claim 6's recitation of a "spectral subrange." (*Id.*) Samsung says that under Pictiva's position this limitation would be meaningless because it encompasses the full spectrum of possible emission wavelengths of an OLED. (*Id.*) Samsung agrees the specification discloses embodiments in which the wavelength may not be the full spectrum, but says these are not the claimed embodiment. (*Id.*)

The Court agrees with Pictiva. For one, Pictiva's position is not the strained reading of the language that Samsung suggests. Samsung implies Pictiva's position requires using the word "between," but it's reasonable to read "from infrared radiation to UV radiation during operation" as simply defining the bounds of the range in which the radiation must be generated.

Claim 6 is not inconsistent with such a reading. That claim recites a color filter "configured to be highly transmissive for a first spectral subrange of the generated electromagnetic radiation

and highly absorb[e]nt for a second spectral subrange of the generated electromagnetic radiation." '425 Patent at 88:37–39. So if, for example, the generated radiation was only in the visible-light spectrum, which the recitation of a color filter suggests, Claim 6 might simply refer to different color filters for that visible light spectrum.

Moreover, the specification undercuts Samsung's construction by providing examples of emission layers with materials that don't generate radiation within the "full spectrum." *See, e.g.*, '425 Patent at 28:50–53 ("[I]t is possible for the emission layer 101 to comprise emitter materials for generating red, green and/or blue light, which emitter materials can be embedded in matrix materials."). Samsung, however, fails to cite an embodiment that aligns with its construction—that is, an embodiment that generates radiation within the full range of both the ultraviolet and infrared spectrums.

Samsung thinks "between" better aligns with Pictiva's position. (*See* Dkt. No. 143 at 29 (asserting Pictiva's construction is incorrect because "[t]he claim does not state that the range is 'between' infrared and UV radiation").) Accordingly, the Court construes this phrase as "the organic layer sequence comprises at least one radiation-emitting region configured to generate electromagnetic radiation with one or more wavelengths in a spectral range anywhere between the lowest frequency of the UV spectrum and the highest frequency of the IR spectrum."

## V. CONCLUSION

| Disputed Term | The Court's Construction |
|---|---|
| "upon said devices" / "upon said mask and said plurality of devices"<br>('389 Patent, Claims 34, 41) | Plain and ordinary meaning |

| | |
|---|---|
| "planarization layer"<br>('389 Patent, Claims 34, 35, 41, 46) | "a layer of material that planarizes such that the propagation of defects from one layer to another layer can be interrupted and the topography of the underlying layer is not reproduced." |
| "selectively depositing"<br>('389 Patent, Claims 34, 35, 41) | "depositing a material in desired areas" |
| "depositing at least one planarization layer upon said mask and said plurality of devices; removing said mask from said substrate"<br>('389 Patent, Claim 41) | The step of "removing said mask from said substrate" must be after the step of "depositing at least one planarization layer upon said mask and said plurality of devices." |
| "an organic layer sequence which emits an electromagnetic radiation having a first wavelength spectrum during operation"<br>('547 Patent, Claim 1) | "an organic layer sequence which emits an electromagnetic radiation with a first wavelength spectrum which corresponds to substantially the entire wavelength spectrum of the electromagnetic radiation emitted by the organic layer sequence during operation where substantially the entire wavelength spectrum refers to the entire wavelength spectrum emitted from the organic layer sequence except for the noise at the tail-end of the spectrum." |
| "transparent to the electromagnetic radiation having the first wavelength spectrum"<br>('547 Patent, Claim 1) | "permitting an electromagnetic radiation having the first wavelength spectrum to pass through in a substantially unimpeded manner and substantially without alteration to its spectral components" |
| "at least partially opaque to an electromagnetic radiation"<br>('547 Patent, Claim 1) | "at least partially block an electromagnetic radiation" |
| "an encapsulation one of disposed upstream and disposed downstream"<br>('547 Patent, Claim 11) | "an encapsulation that is disposed either upstream or downstream of the structured layer in the beam path of the electromagnetic radiation emitted by the organic layer sequence" |

| | |
|---|---|
| "metal complex"<br>('223 Patent, Claim 1, 2, 10, 11, 13, 14) | "a compound containing one or more metal elements that coordinate to one or more non-metal elements, fragments or ions, excluding metal oxides" |
| "wherein the organic compound coordinates to the metal complex due to the joint vaporization"<br>('223 Patent, Claim 2) | Plain and ordinary meaning |
| "coordinate[s]"<br>('223 Patent, Claim 2, 11, 14) | "form[s] a chemical bond between two atoms in which a shared pair has been supplied by one of the two atoms" |
| "chain-like structure"<br>('223 Patent, Claim 12) | "a structure in which at least parts of organic compounds bridge exactly two metal complexes together" |
| "network-like structure"<br>('223 Patent, Claim 12) | "a structure in which at least parts of organic compounds bridge more than two metal complexes together" |
| "degree of cross-linking of the electron-conducting layer"<br>('223 Patent, Claim 13) | "degree of linking between the metal complex and the organic compound in the electron-conducting layer" |
| "matrix material"<br>('164 Patent, Claim 1–6, 10, 13–16) | "The first, second, and third matrix materials are different materials and are part of the same matrix" |
| "charge carrier mobility"<br>('164 Patent, Claim 14, 16) | "hole mobility (for a hole transport material) and/or electron mobility (for an electron transport material)" |
| "A method for the production of an electronic device according to claim 1, comprising the steps of:"<br>('164 Patent, Claim 13) | Plain and ordinary meaning |

| | |
|---|---|
| "applied in a structured fashion" and "applying . . . in a structured fashion"<br>('492 Patent, Cl. 1,9, 10, 16) | "[applied/applying] such that the desired structure is already formed during the application of the corresponding layer." |
| "optoelectronic component"<br>('492 Patent, Claim 10) | Plain and ordinary meaning |
| "passive electronic component"<br>('492 Patent, Claim 1, 10, 16) | Plain and ordinary meaning.<br>The preambles of Claims 1 and 16 are limiting. |
| "a plurality of capacitors and/or resistors"<br>('492 Patent, Claim 6) | Plain and ordinary meaning |
| "a resistance region . . . which has a taper in a direction parallel to the electrically conductive layers"<br>('492 Patent, Claim 3) | Plain and ordinary meaning |
| "second trench" and "third trench"<br>('492 Patent, Claim 3) | "second trench in the first or second electrically conductive layer, or in both such layers"<br>"third trench in the first or second electrically conductive layer, or in both such layers" |
| "applying an electrically conductive electrode layer in a structured fashion to the dielectric above the first contact region and to the second contact region"<br>"an electrically conductive electrode layer, which is applied in a structured fashion to the dielectric above the first contact region and to the second contact region"<br>"an electrically conductive electrode layer, which is applied in a structured fashion on the dielectric above the first contact region and at least partly on the second contact region" ('492 Patent, Cl. 1, 10, 16) | Plain and ordinary meaning |

| | |
|---|---|
| "the organic layer sequence comprises at least one radiation-emitting region configured to generate electromagnetic radiation in a spectral range from infrared radiation to UV radiation during operation"<br>('425 Patent, Claim 1) | "the organic layer sequence comprises at least one radiation-emitting region configured to generate electromagnetic radiation with one or more wavelengths in a spectral range anywhere between the lowest frequency of the UV spectrum and the highest frequency of the IR spectrum" |

The Court **ORDERS** each party not to refer, directly or indirectly, to its own or any other party's claim-construction positions in the presence of the jury. Likewise, the Court **ORDERS** the parties to refrain from mentioning any part of this opinion, other than the actual positions adopted by the Court, in the presence of the jury. Neither party may take a position before the jury that contradicts the Court's reasoning in this opinion. Any reference to claim construction proceedings is limited to informing the jury of the positions adopted by the Court.

## So Ordered this

**Jun 26, 2025**

RODNEY GILSTRAP
UNITED STATES DISTRICT JUDGE