US 20140218517A1

(19) United States

(12) Patent Application Publication

KIM et al.

(10) Pub. No.: US 2014/0218517 A1

(43) Pub. Date: Aug. 7, 2014

(54) **HOME MONITORING METHOD AND APPARATUS**

(71) Applicant: **Samsung Electronics Co., Ltd.**, Suwon-si (KR)

(72) Inventors: **Kyung-Jae KIM**, Suwon-si (KR); **Ji-Hyeon KWEON**, Yongin-si (KR); **Keun-Cheol LEE**, Seoul (KR); **Dong-Seok KIM**, Seoul (KR); **Hyun-Sik KIM**, Suwon-si (KR)

(73) Assignee: **Samsung Electronics Co., Ltd.**, Suwon-si (KR)

(21) Appl. No.: **14/105,690**

(22) Filed: **Dec. 13, 2013**

(30) **Foreign Application Priority Data**

Dec. 14, 2012 (KR) 10-2012-0146251
Sep. 5, 2013 (KR) 10-2013-0106518

Publication Classification

(51) **Int. Cl.**
H04L 12/28 (2006.01)
H04N 7/18 (2006.01)

(52) **U.S. Cl.**
CPC ***H04L 12/2805*** (2013.01); ***H04N 7/181*** (2013.01); *H04L 2012/2849* (2013.01)
USPC **348/143**

(57) **ABSTRACT**

Provided is a home monitoring method and apparatus. A home gateway executes receiving, from a mobile terminal, a request message for requesting home monitoring, providing, to the mobile terminal in response to the request message, monitoring information associated with a camera module included in at least one home device registered in advance and/or a position to be monitored, receiving, from the mobile terminal, selection information indicating a first camera module selected based on the monitoring information, transmitting, to the mobile terminal, image data captured and collected by the first camera module in response to the reception of the selection information, receiving, from the mobile terminal, a control command with respect to the first camera module, and transmitting the control command to a first home device including the first camera module.

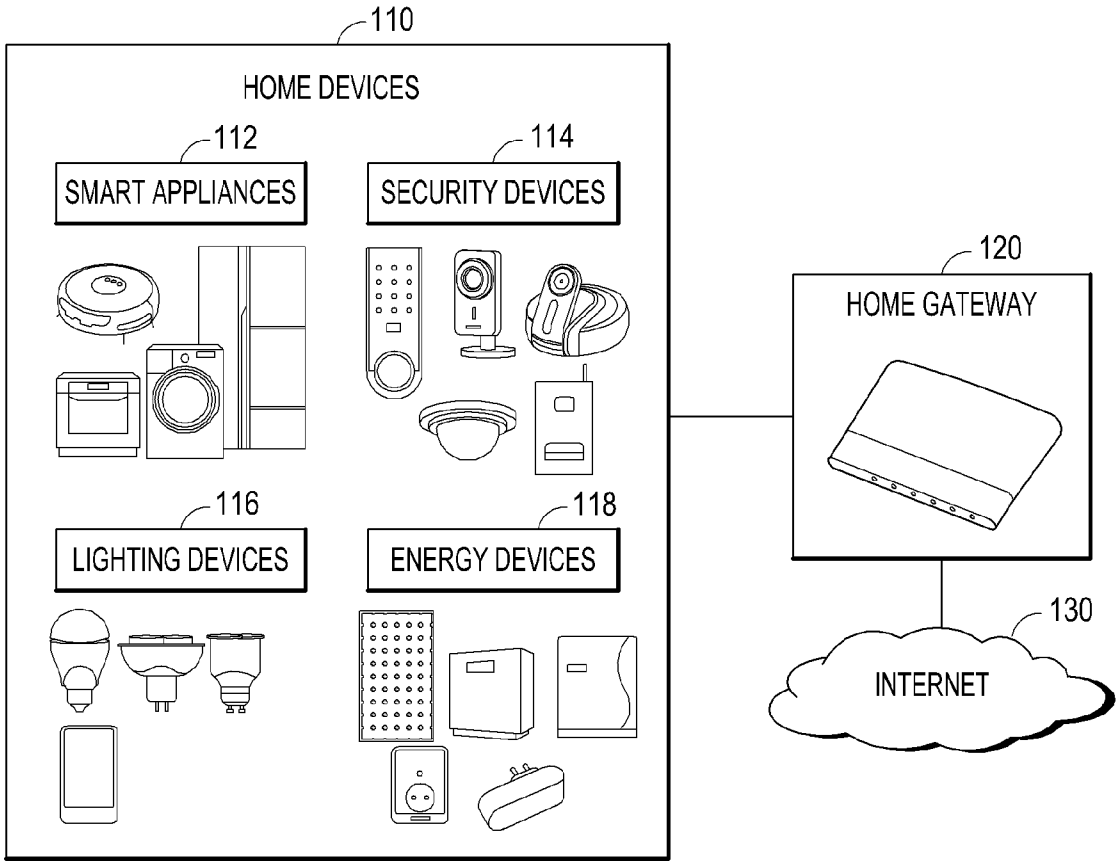

REOLINK 1009

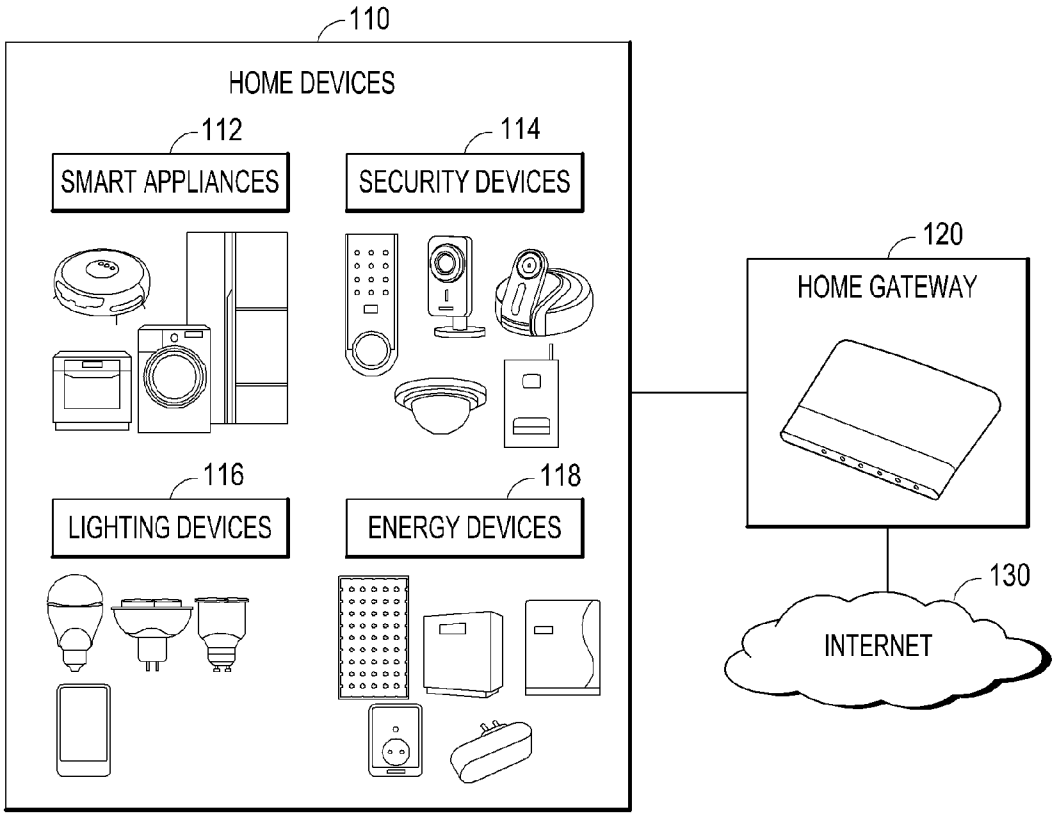
110
HOME DEVICES
112
SMART APPLIANCES
114
SECURITY DEVICES
116
LIGHTING DEVICES
118
ENERGY DEVICES
120
HOME GATEWAY
130
INTERNET

FIG.1

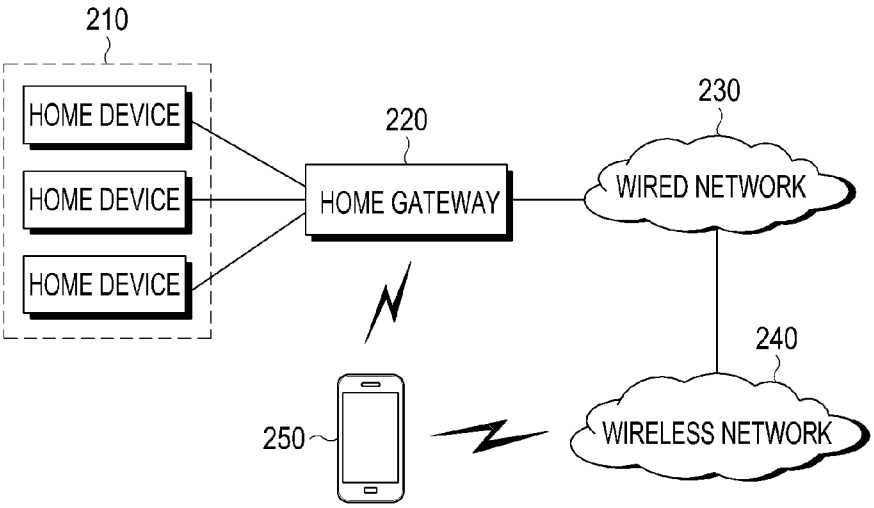
210
HOME DEVICE
HOME DEVICE
HOME DEVICE
220
HOME GATEWAY
230
WIRED NETWORK
240
WIRELESS NETWORK
250

FIG.2

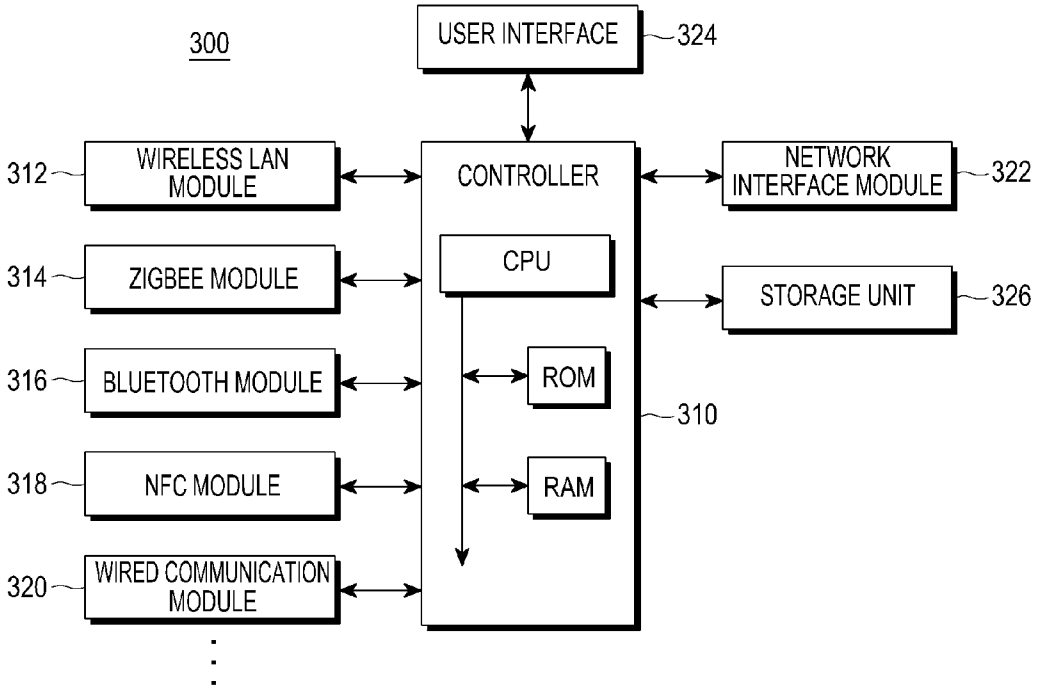
300
USER INTERFACE
324
312
WIRELESS LAN MODULE
CONTROLLER
NETWORK INTERFACE MODULE
322
314
ZIGBEE MODULE
CPU
STORAGE UNIT
326
316
BLUETOOTH MODULE
ROM
310
318
NFC MODULE
RAM
320
WIRED COMMUNICATION MODULE

FIG.3

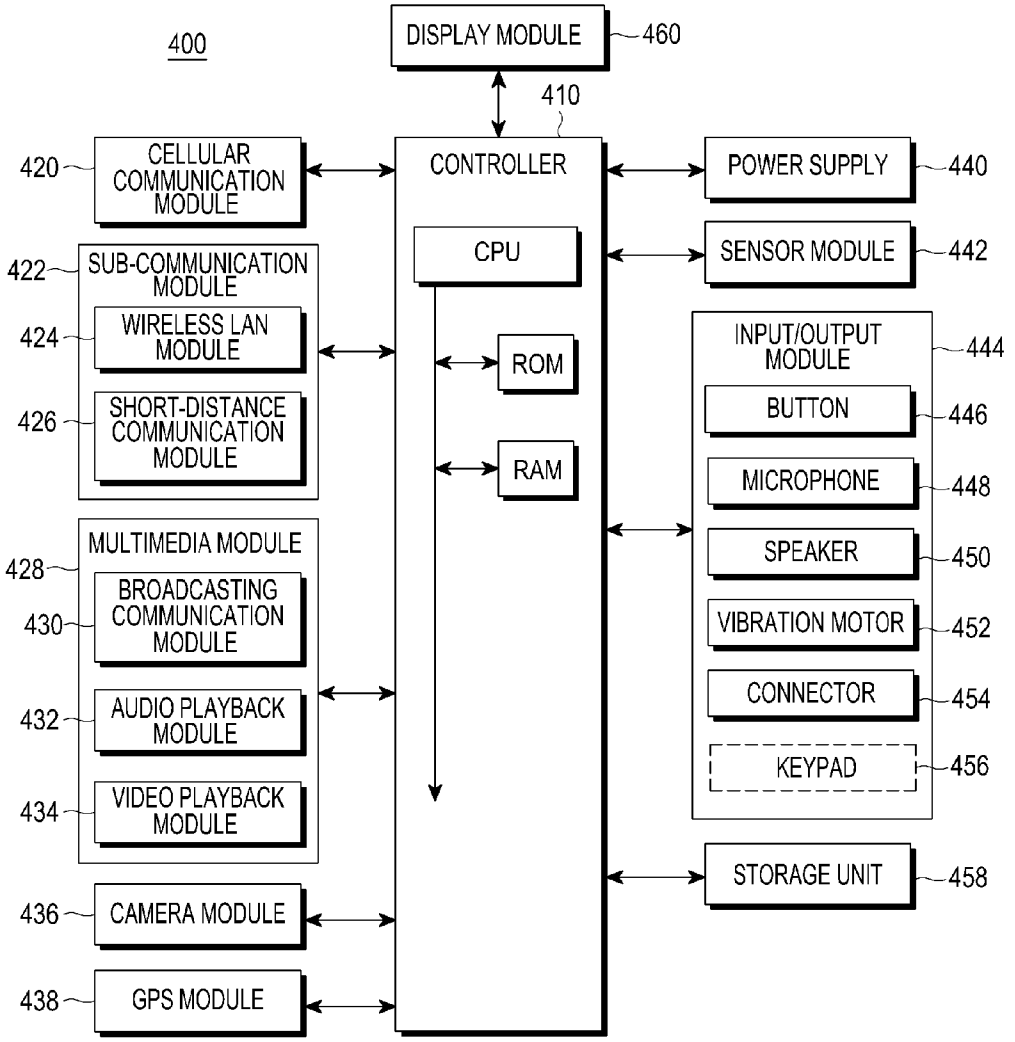
400
DISPLAY MODULE
460
410
CONTROLLER
CPU
ROM
RAM
420
CELLULAR COMMUNICATION MODULE
422
SUB-COMMUNICATION MODULE
424
WIRELESS LAN MODULE
426
SHORT-DISTANCE COMMUNICATION MODULE
428
MULTIMEDIA MODULE
430
BROADCASTING COMMUNICATION MODULE
432
AUDIO PLAYBACK MODULE
434
VIDEO PLAYBACK MODULE
436
CAMERA MODULE
438
GPS MODULE
POWER SUPPLY
440
SENSOR MODULE
442
INPUT/OUTPUT MODULE
444
BUTTON
446
MICROPHONE
448
SPEAKER
450
VIBRATION MOTOR
452
CONNECTOR
454
KEYPAD
456
STORAGE UNIT
458

FIG.4

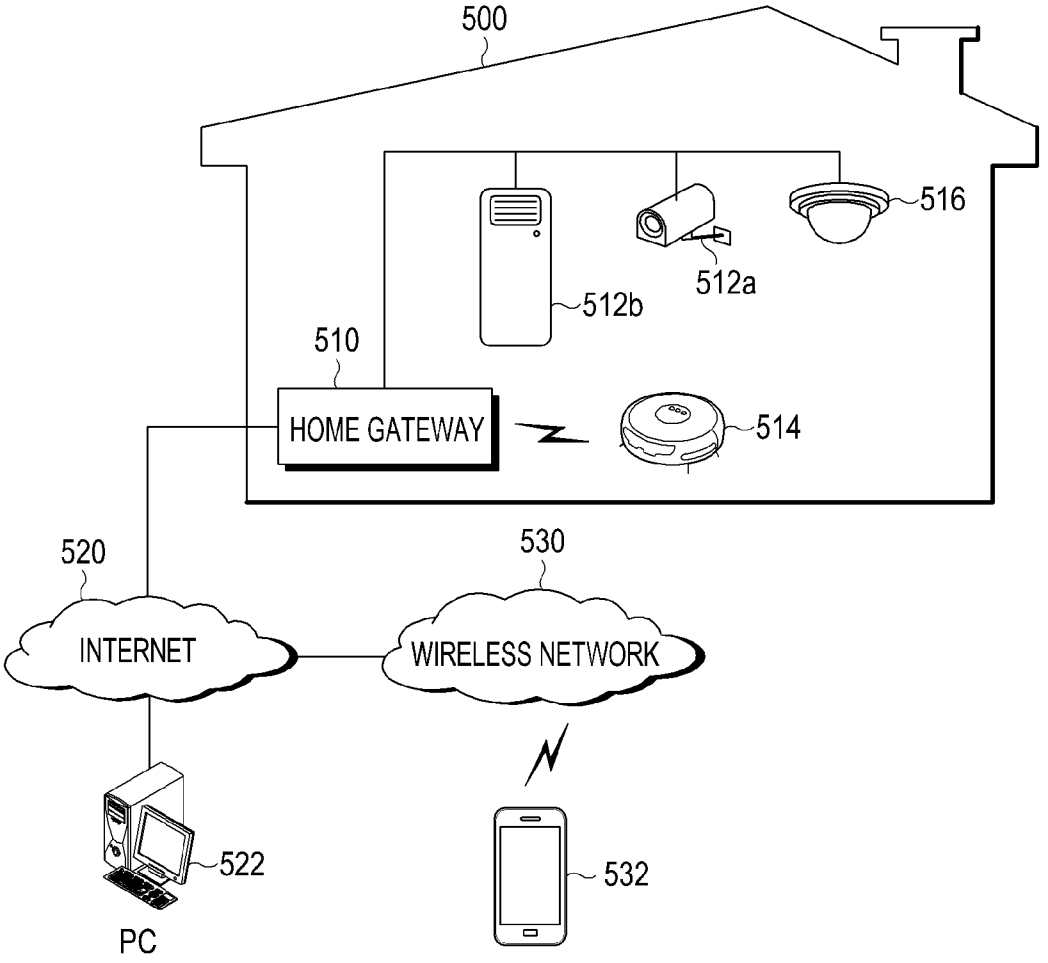
500
516
512a
512b
510
HOME GATEWAY
514
520
530
INTERNET
WIRELESS NETWORK
522
PC
532

FIG.5

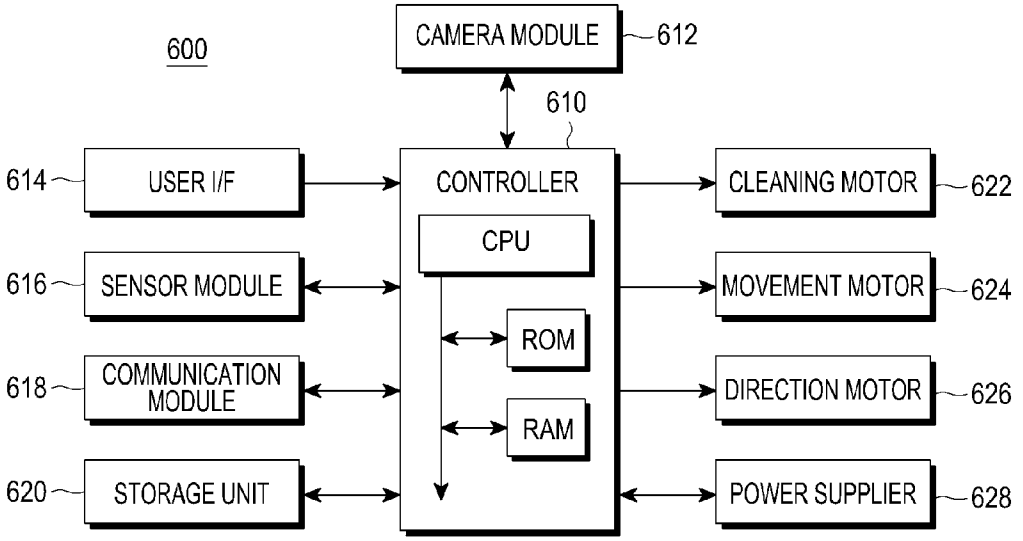
600
CAMERA MODULE
612
610
614
USER I/F
CONTROLLER
CLEANING MOTOR
622
CPU
616
SENSOR MODULE
MOVEMENT MOTOR
624
ROM
618
COMMUNICATION MODULE
DIRECTION MOTOR
626
RAM
620
STORAGE UNIT
POWER SUPPLIER
628

FIG.6

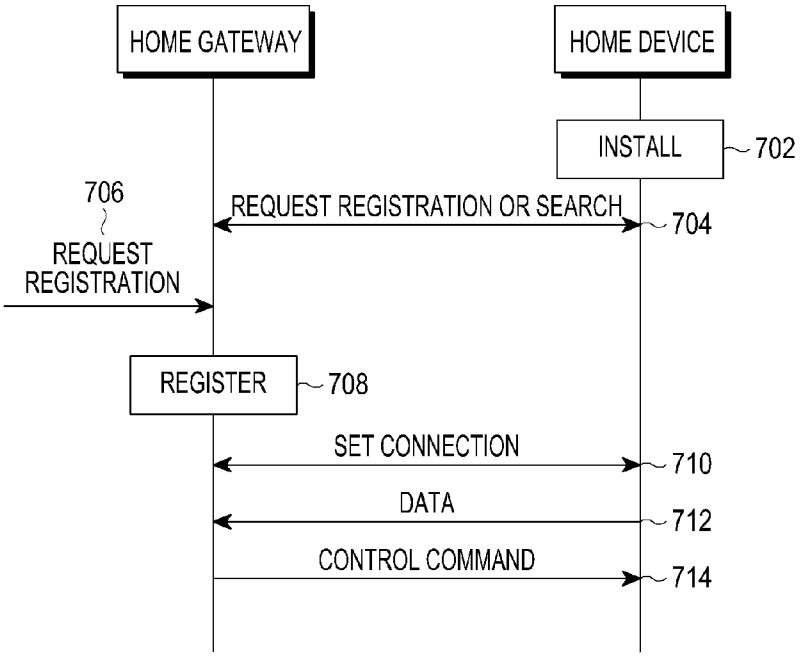
HOME GATEWAY
HOME DEVICE
INSTALL
702
706
REQUEST REGISTRATION OR SEARCH
704
REQUEST REGISTRATION
REGISTER
708
SET CONNECTION
710
DATA
712
CONTROL COMMAND
714

FIG.7

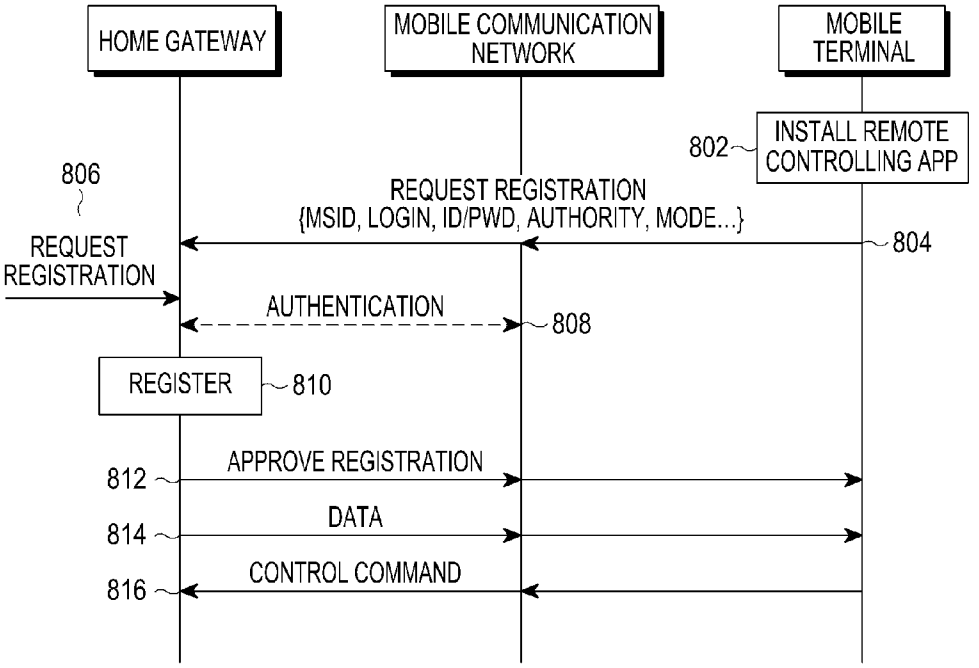
HOME GATEWAY
MOBILE COMMUNICATION NETWORK
MOBILE TERMINAL
802
INSTALL REMOTE CONTROLLING APP
806
REQUEST REGISTRATION
REQUEST REGISTRATION
{MSID, LOGIN, ID/PWD, AUTHORITY, MODE...}
804
AUTHENTICATION
808
REGISTER
810
APPROVE REGISTRATION
812
DATA
814
CONTROL COMMAND
816

FIG.8

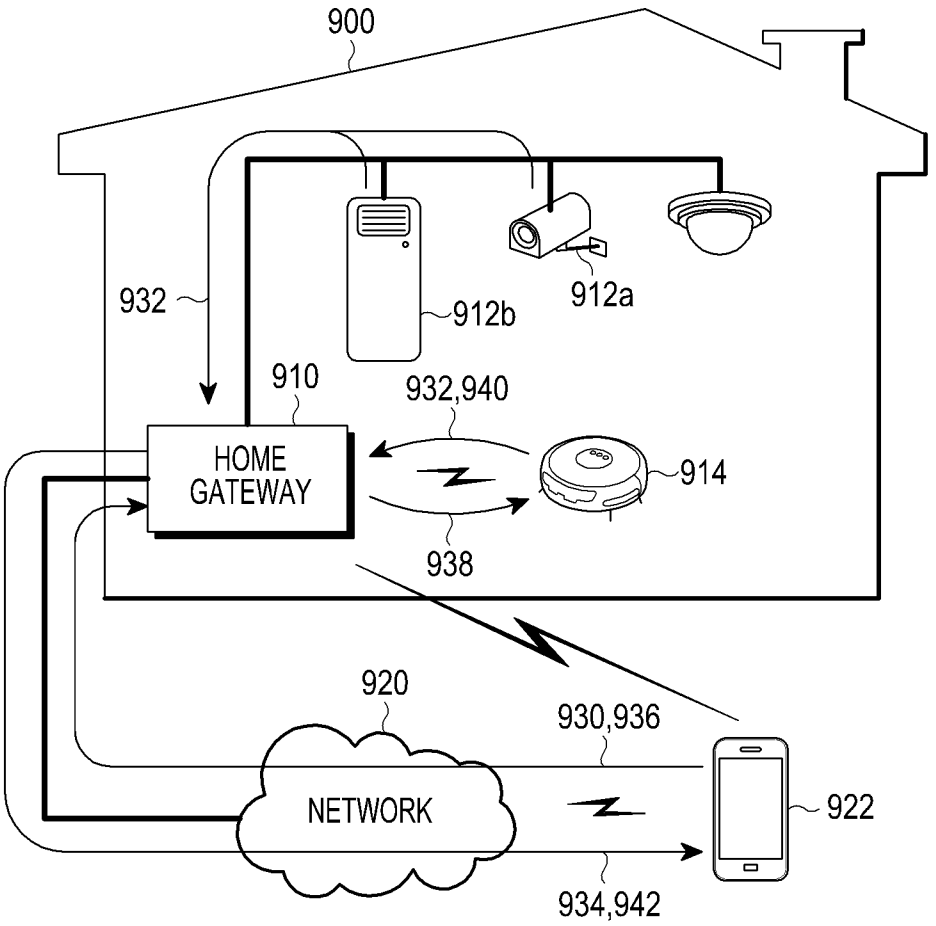
900
932
912b
912a
910
932,940
HOME
GATEWAY
914
938
920
930,936
NETWORK
922
934,942

FIG.9

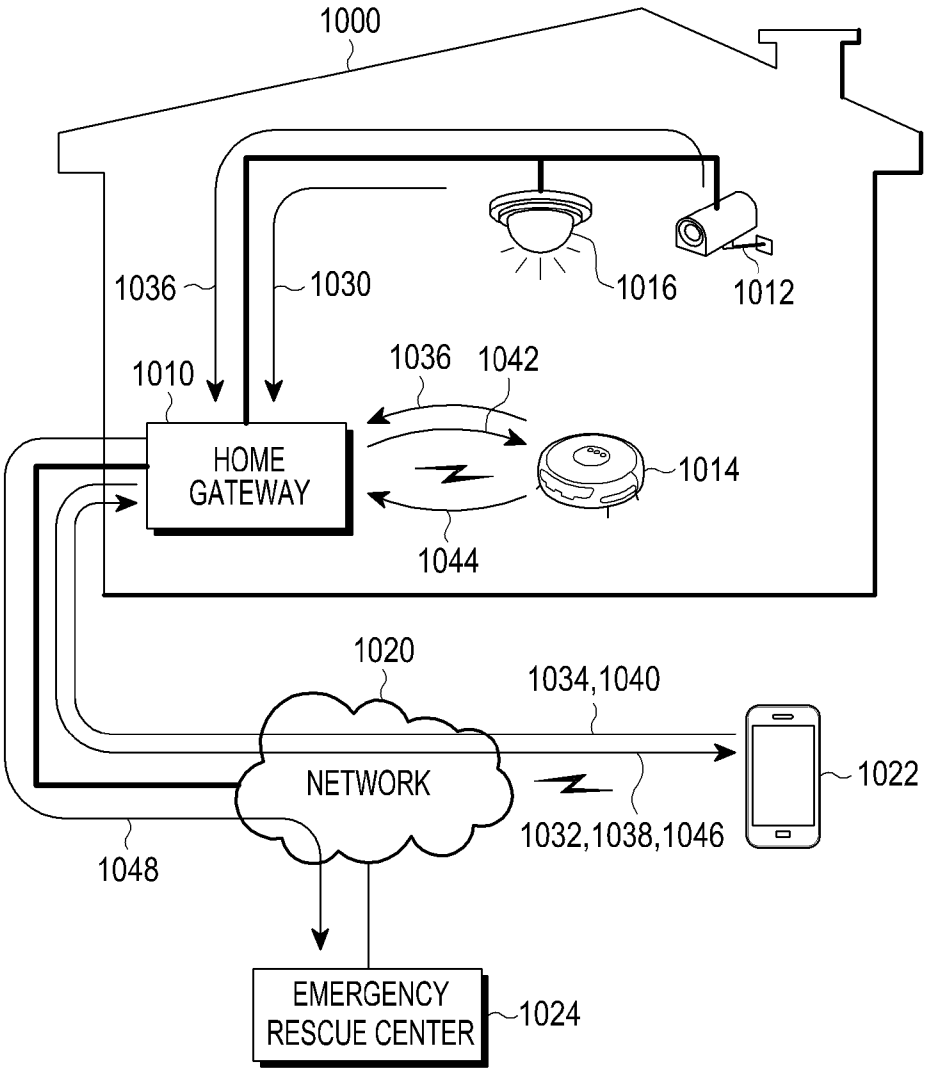
1000
1036
1030
1016
1012
1010
1036
1042
HOME GATEWAY
1014
1044
1020
1034,1040
NETWORK
1022
1032,1038,1046
1048
EMERGENCY RESCUE CENTER
1024

FIG.10

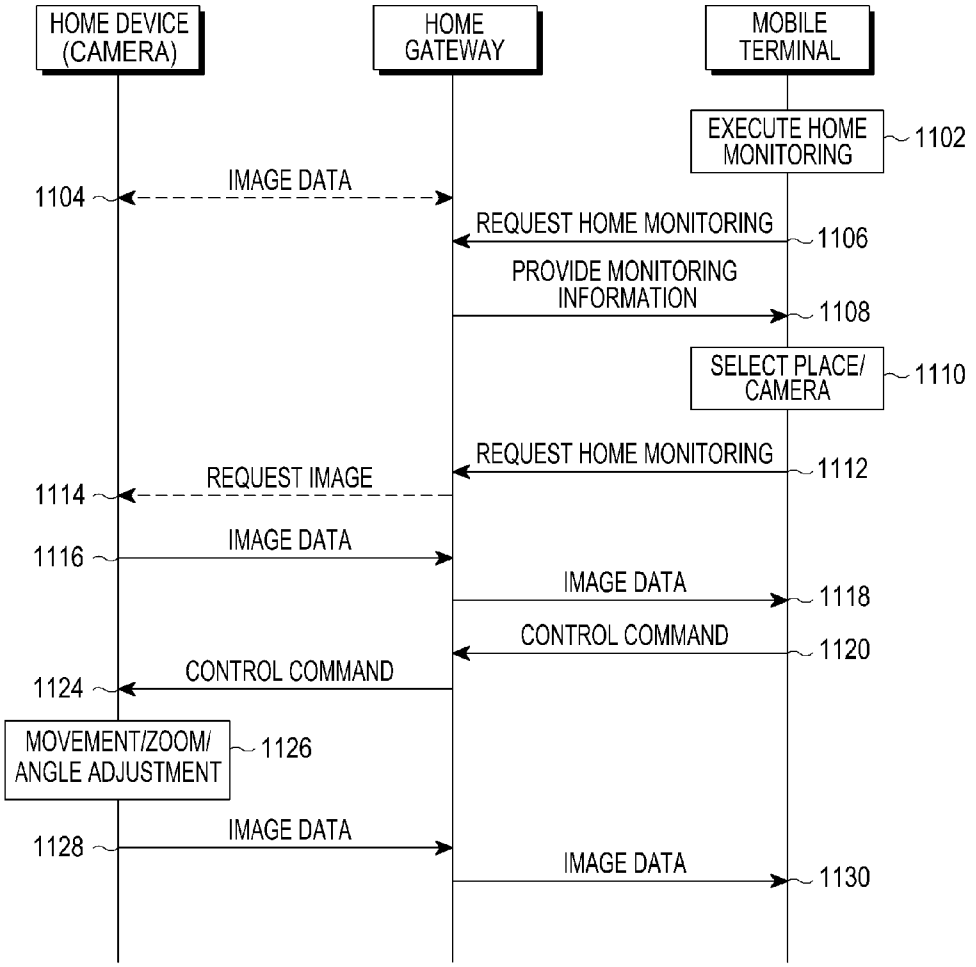
HOME DEVICE (CAMERA)
HOME GATEWAY
MOBILE TERMINAL
EXECUTE HOME MONITORING
1102
1104
IMAGE DATA
REQUEST HOME MONITORING
1106
PROVIDE MONITORING INFORMATION
1108
SELECT PLACE/ CAMERA
1110
REQUEST HOME MONITORING
1112
1114
REQUEST IMAGE
1116
IMAGE DATA
IMAGE DATA
1118
CONTROL COMMAND
1120
1124
CONTROL COMMAND
MOVEMENT/ZOOM/ ANGLE ADJUSTMENT
1126
1128
IMAGE DATA
IMAGE DATA
1130

FIG.11

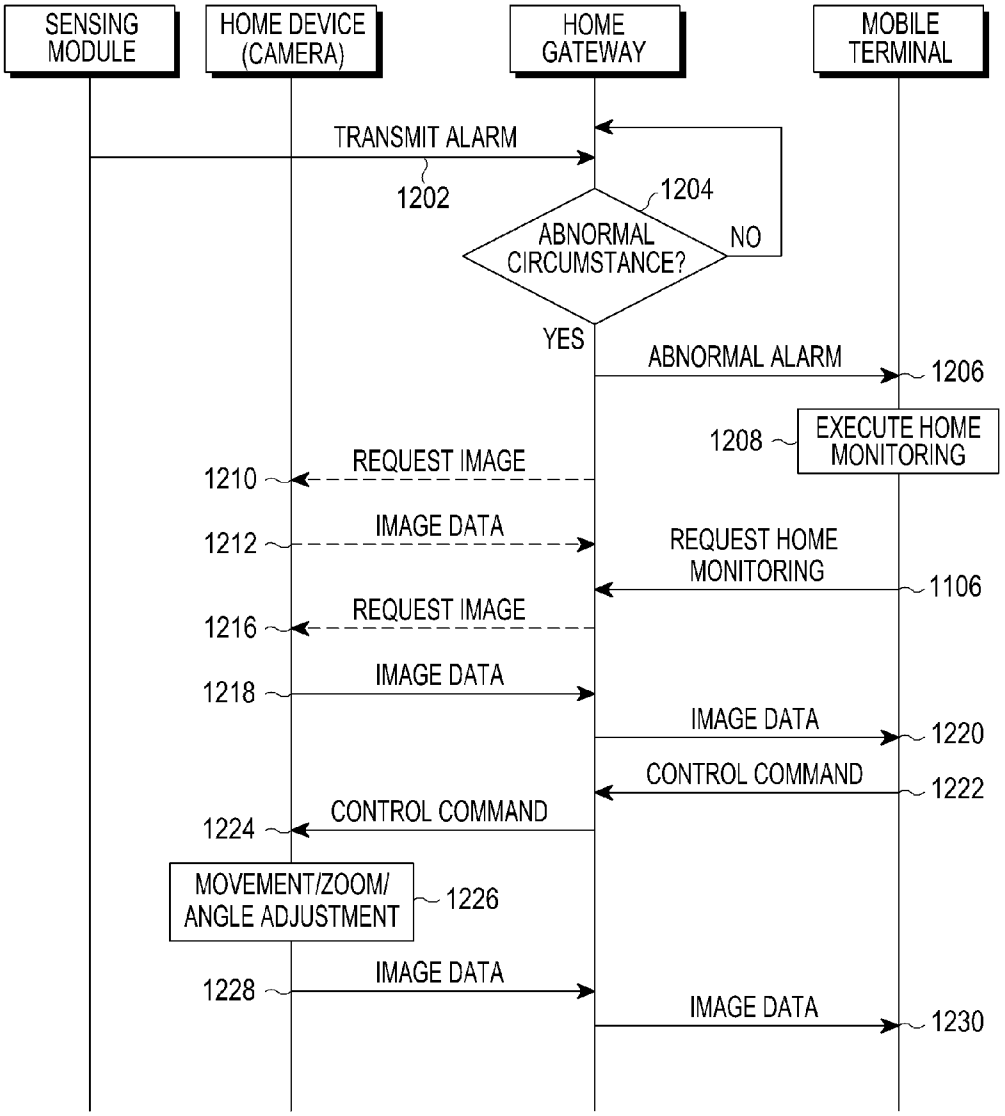
SENSING MODULE
HOME DEVICE (CAMERA)
HOME GATEWAY
MOBILE TERMINAL
TRANSMIT ALARM
1202
1204
ABNORMAL CIRCUMSTANCE?
NO
YES
ABNORMAL ALARM
1206
1208
EXECUTE HOME MONITORING
REQUEST IMAGE
1210
IMAGE DATA
1212
REQUEST HOME MONITORING
1106
REQUEST IMAGE
1216
IMAGE DATA
1218
IMAGE DATA
1220
CONTROL COMMAND
1222
CONTROL COMMAND
1224
MOVEMENT/ZOOM/ ANGLE ADJUSTMENT
1226
IMAGE DATA
1228
IMAGE DATA
1230

FIG.12

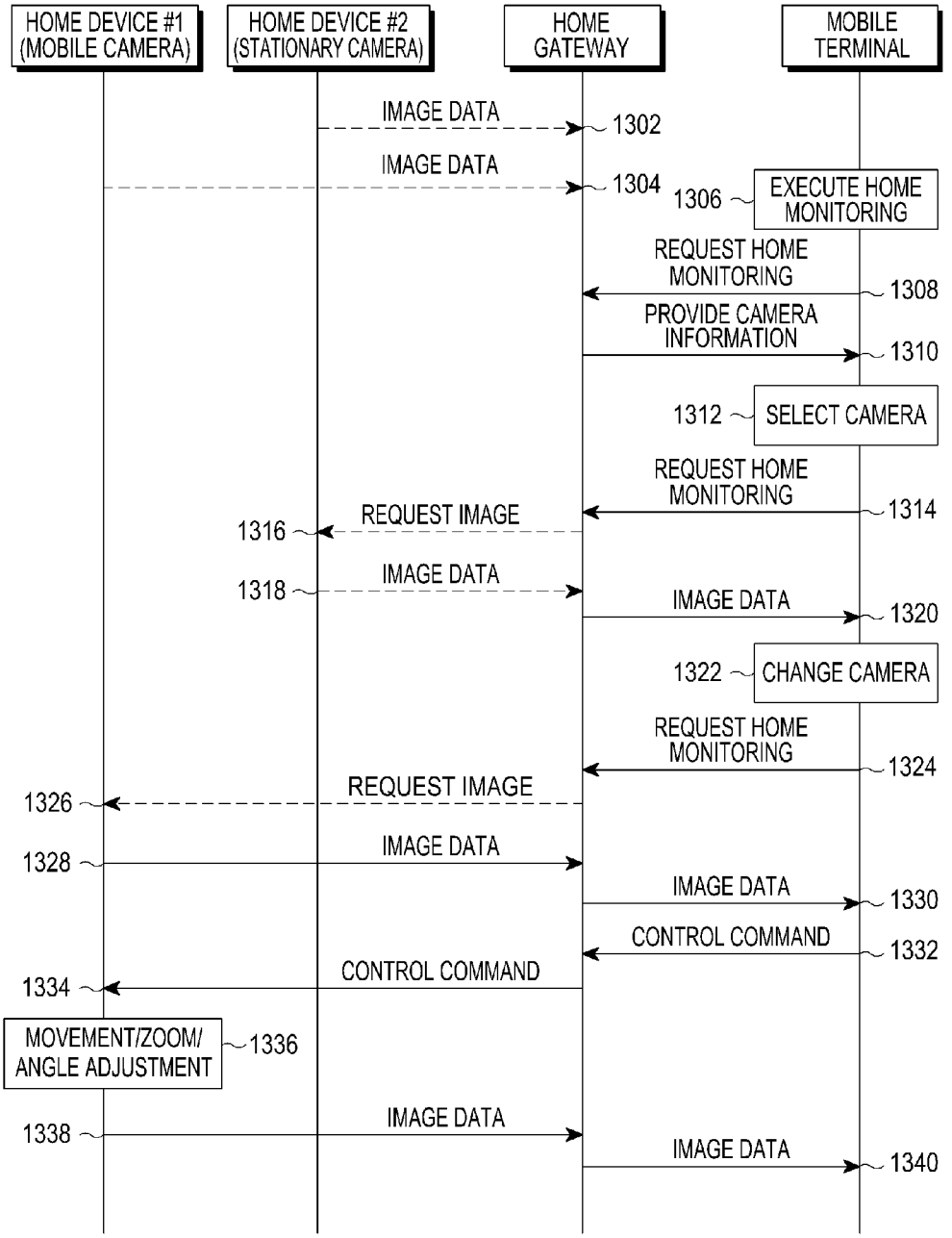
HOME DEVICE #1 (MOBILE CAMERA)
HOME DEVICE #2 (STATIONARY CAMERA)
HOME GATEWAY
MOBILE TERMINAL
IMAGE DATA
1302
IMAGE DATA
1304
1306
EXECUTE HOME MONITORING
REQUEST HOME MONITORING
1308
PROVIDE CAMERA INFORMATION
1310
1312
SELECT CAMERA
REQUEST HOME MONITORING
1314
REQUEST IMAGE
1316
1318
IMAGE DATA
IMAGE DATA
1320
1322
CHANGE CAMERA
REQUEST HOME MONITORING
1324
REQUEST IMAGE
1326
1328
IMAGE DATA
IMAGE DATA
1330
CONTROL COMMAND
1332
CONTROL COMMAND
1334
MOVEMENT/ZOOM/ ANGLE ADJUSTMENT
1336
1338
IMAGE DATA
IMAGE DATA
1340

FIG.13

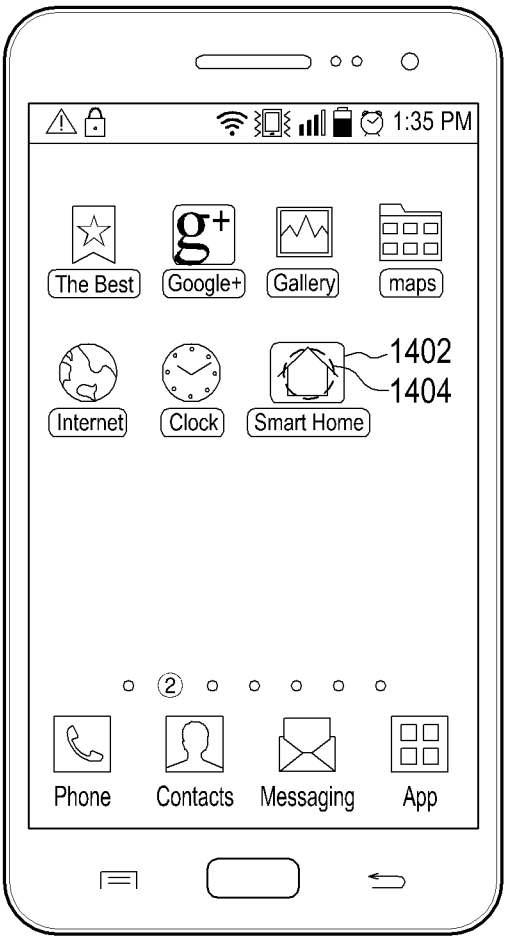
1:35 PM
The Best
Google+
Gallery
maps
Internet
Clock
Smart Home
1402
1404
2
Phone
Contacts
Messaging
App

FIG.14

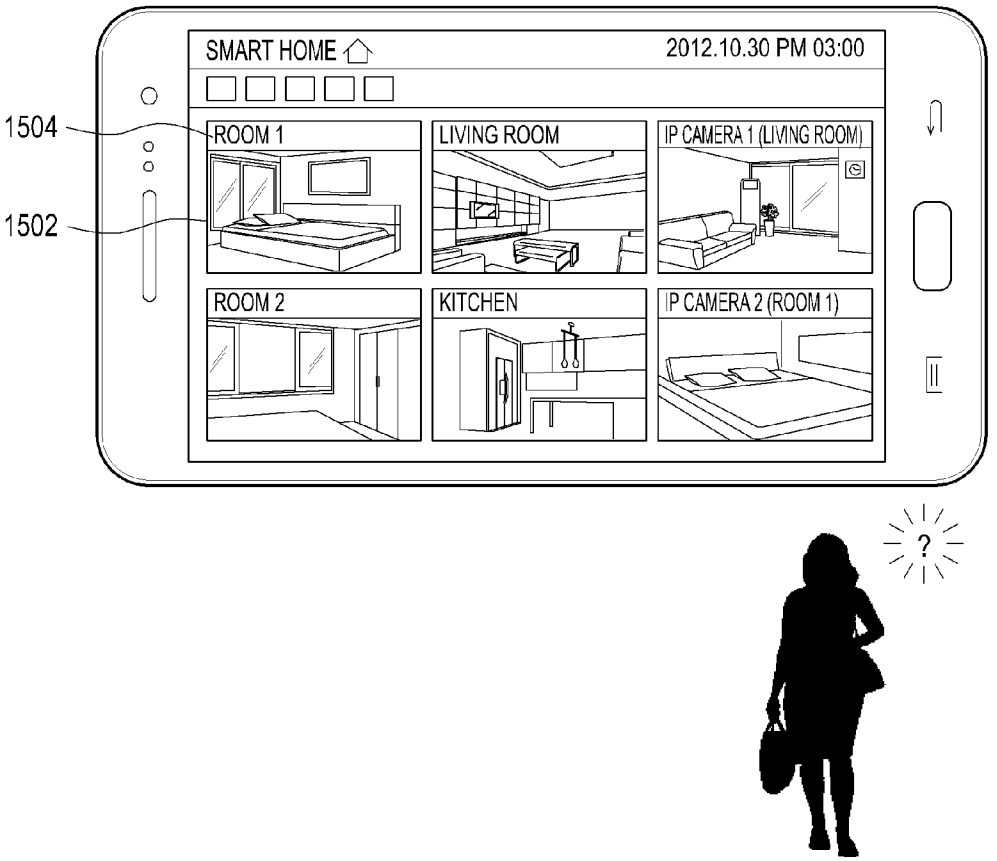
SMART HOME
2012.10.30 PM 03:00
1504
1502
ROOM 1
LIVING ROOM
IP CAMERA 1 (LIVING ROOM)
ROOM 2
KITCHEN
IP CAMERA 2 (ROOM 1)
?

FIG.15

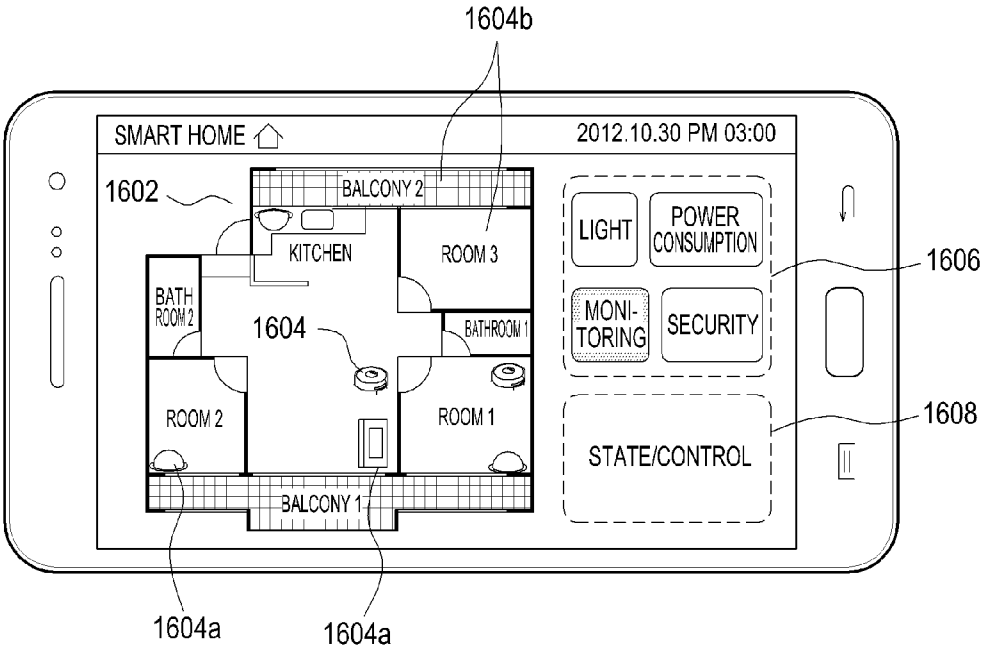
1604b
SMART HOME
2012.10.30 PM 03:00
1602
BALCONY 2
KITCHEN
ROOM 3
BATH ROOM 2
1604
BATHROOM 1
ROOM 2
ROOM 1
BALCONY 1
LIGHT
POWER CONSUMPTION
MONI-TORING
SECURITY
1606
STATE/CONTROL
1608
1604a
1604a

FIG.16

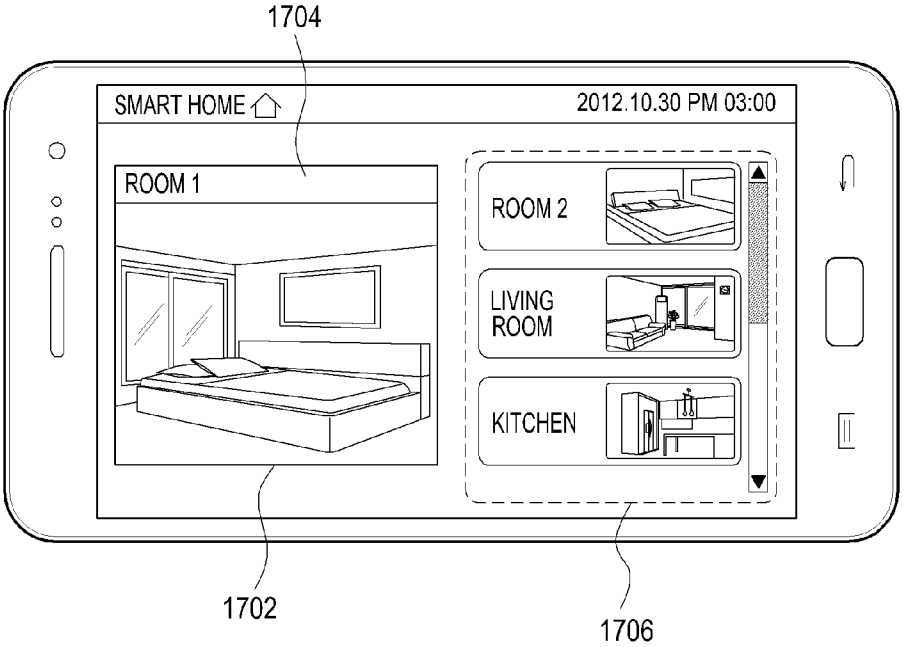
1704
SMART HOME
2012.10.30 PM 03:00
ROOM 1
ROOM 2
LIVING ROOM
KITCHEN
1702
1706

FIG.17

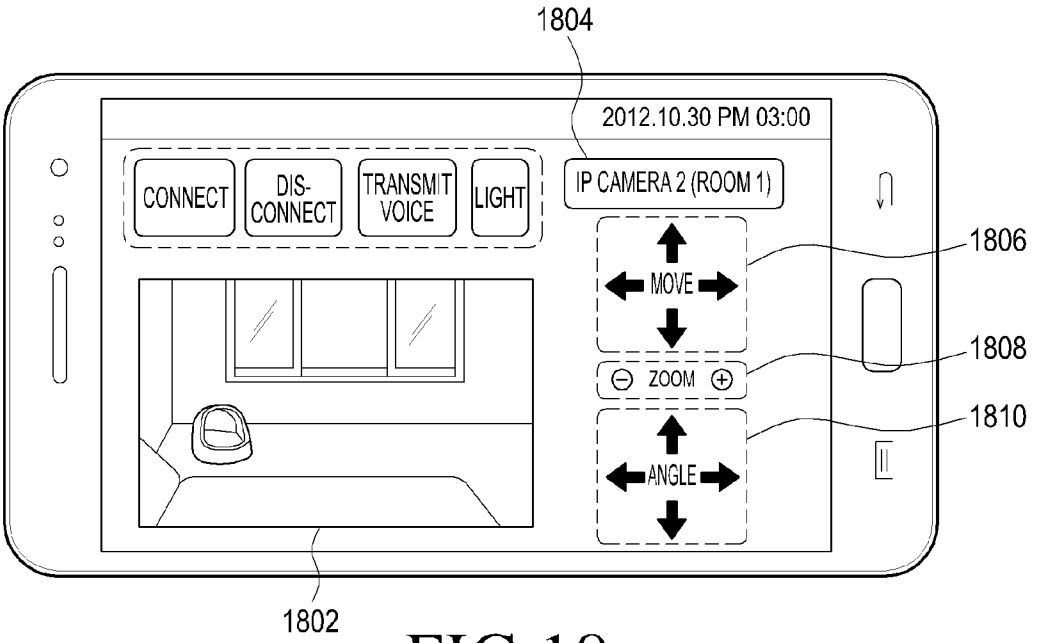

FIG.18

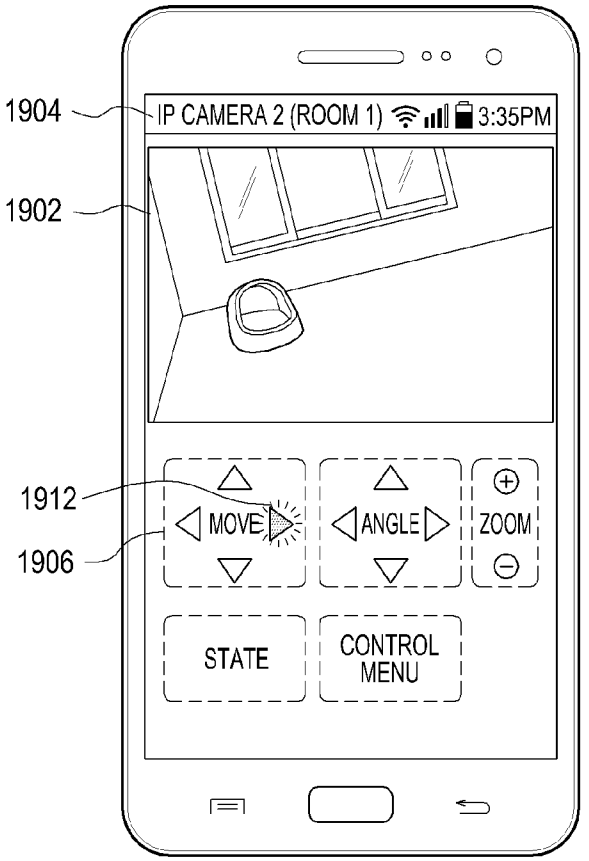

FIG.19A

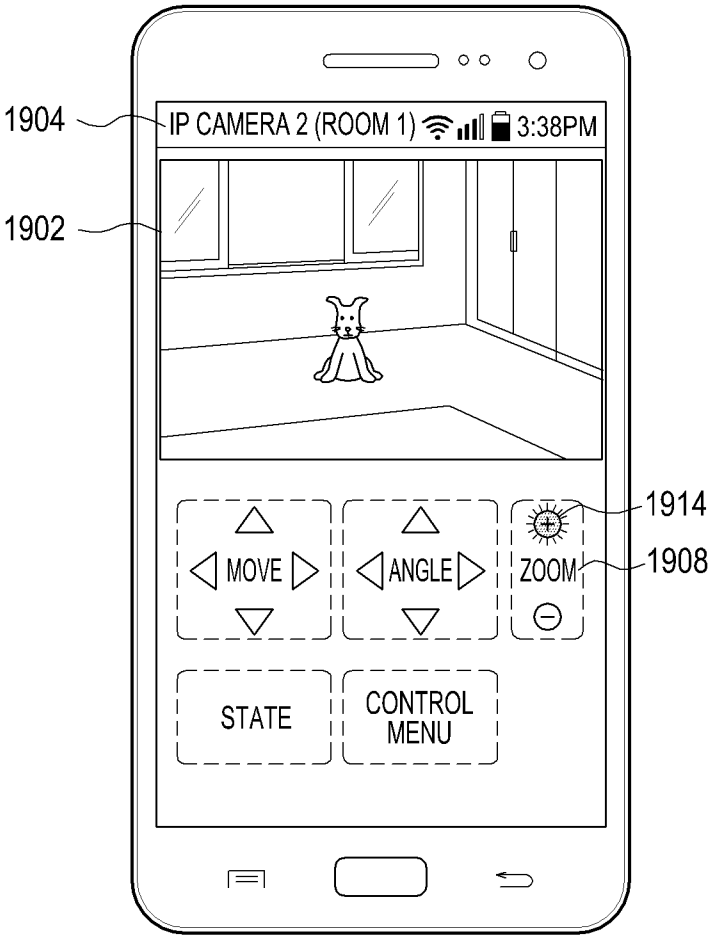
1904
IP CAMERA 2 (ROOM 1)
3:38PM
1902
1914
MOVE
ANGLE
ZOOM
1908
STATE
CONTROL MENU

FIG.19B

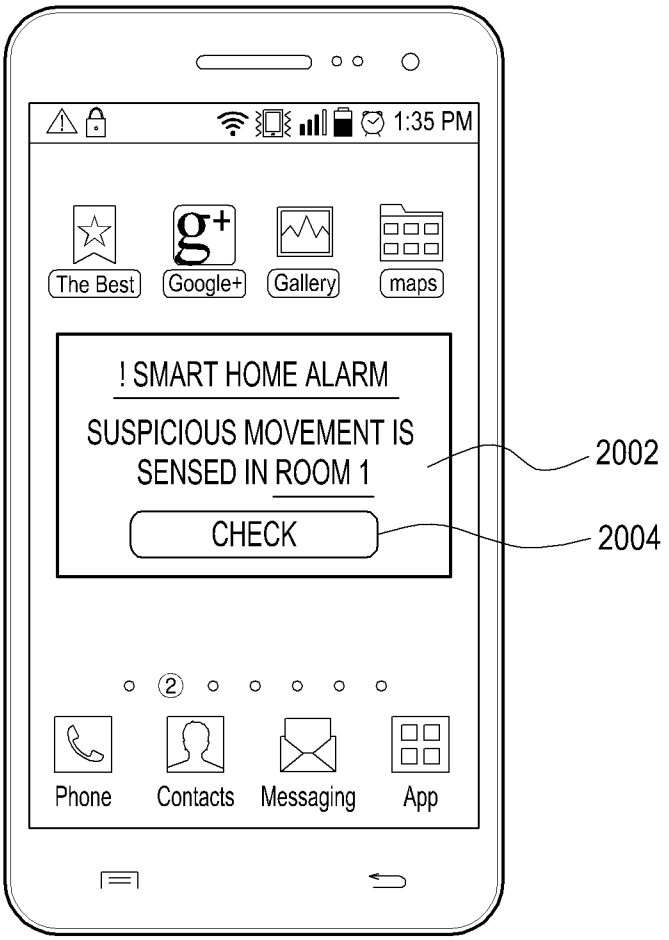
1:35 PM
The Best
Google+
Gallery
maps
! SMART HOME ALARM
SUSPICIOUS MOVEMENT IS SENSED IN ROOM 1
CHECK
2002
2004
Phone
Contacts
Messaging
App

FIG.20

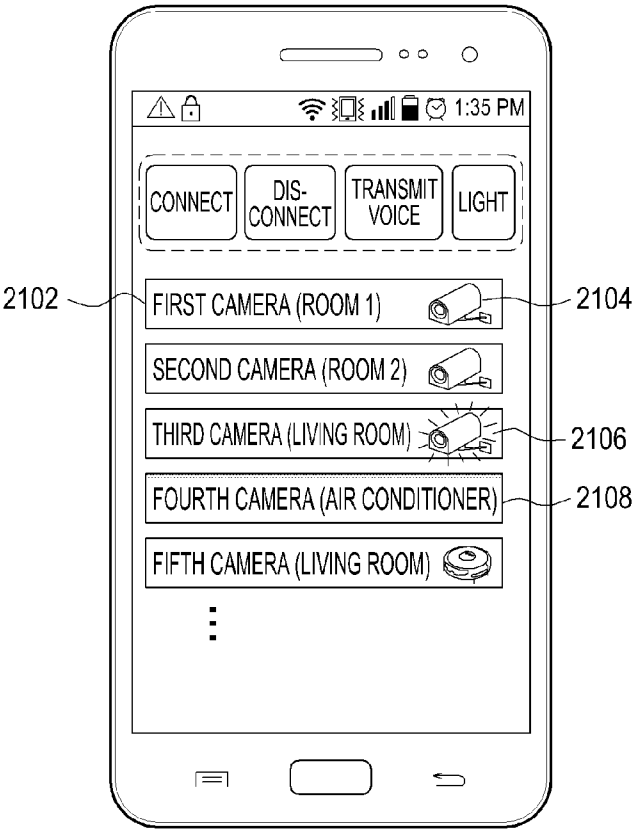
1:35 PM
CONNECT
DIS-CONNECT
TRANSMIT VOICE
LIGHT
2102
FIRST CAMERA (ROOM 1)
2104
SECOND CAMERA (ROOM 2)
THIRD CAMERA (LIVING ROOM)
2106
FOURTH CAMERA (AIR CONDITIONER)
2108
FIFTH CAMERA (LIVING ROOM)

FIG.21

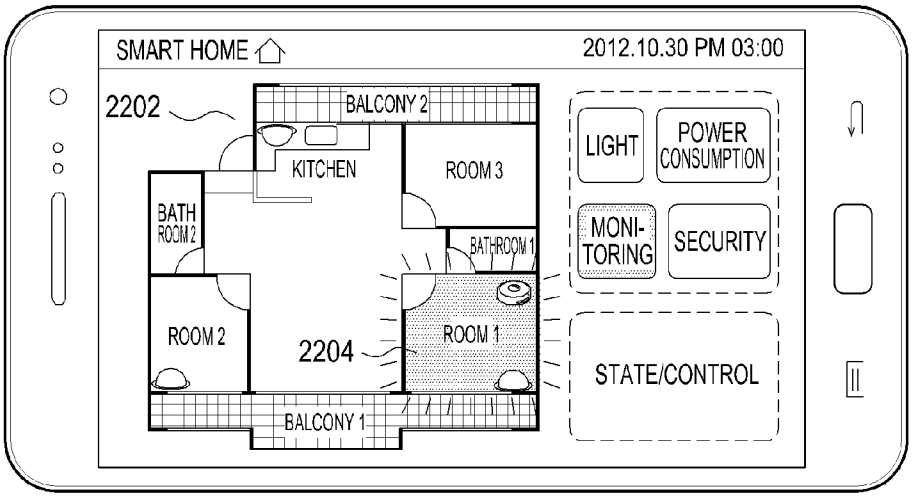
SMART HOME
2012.10.30 PM 03:00
2202
BALCONY 2
KITCHEN
ROOM 3
BATH ROOM 2
BATHROOM 1
ROOM 2
2204
ROOM 1
BALCONY 1
LIGHT
POWER CONSUMPTION
MONI-TORING
SECURITY
STATE/CONTROL

FIG.22

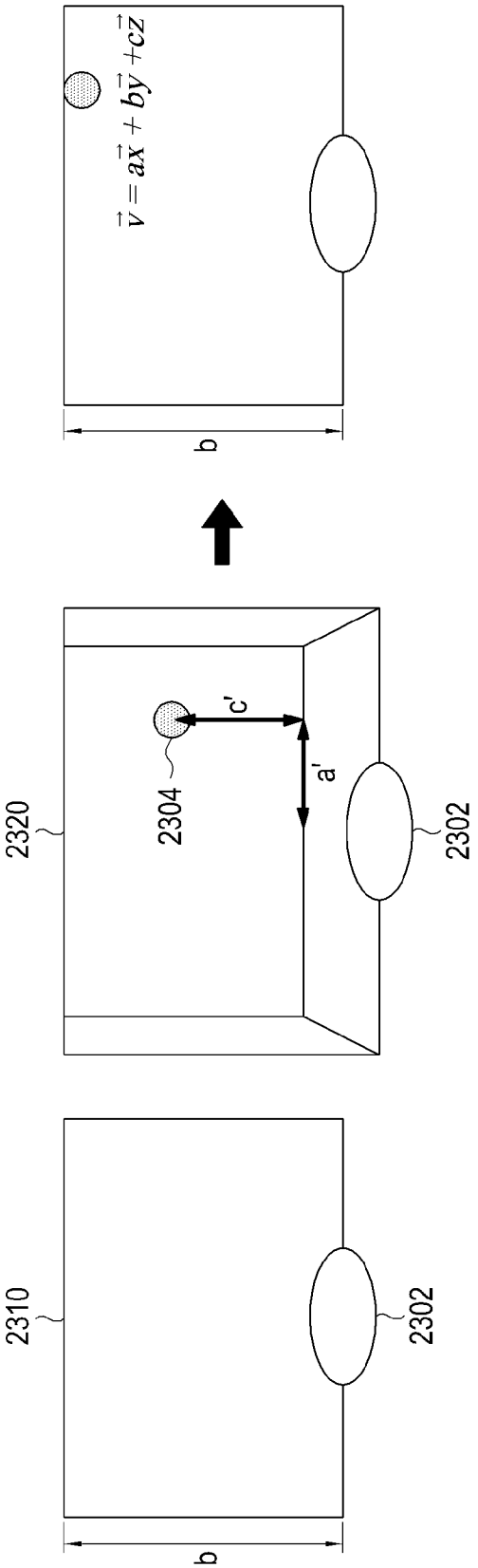

FIG.23

HOME MONITORING METHOD AND APPARATUS

PRIORITY

[0001] This application claims priority under 35 U.S.C. §119(a) to Korean Patent Application filed in the Korean Intellectual Property Office on Dec. 14, 2012 and assigned Serial No. 10-2012-0146251 and a Korean Patent Application filed in the Korean Intellectual Property Office on Sep. 5, 2013 and assigned Serial No. 10-2013-0106518, the contents of which are incorporated herein by reference.

BACKGROUND OF THE INVENTION

[0002] 1. Field of the Invention

[0003] The present disclosure relates to a home network system, and particularly, to a home monitoring method and apparatus using electrical appliances and cameras.

[0004] 2. Description of the Related Art

[0005] A home network system refers to a system that connects home devices installed in a house through a wired or wireless network so as to control the home devices. An advanced home network system integrates home devices through a Home Gateway (HGW or H-GW) and connects the home devices to an external common data network, for example, an Internet Protocol (IP) network (that is, the Internet), so as to provide more various Internet-based services. The home network system may control home devices based on a request from a user and may provide a service desired by the user.

[0006] Recently, types of home devices have gradually diversified, and accordingly, user's requests have diversified and thus, there is a need to provide the best service by taking into consideration various requests from a user.

SUMMARY OF THE INVENTION

Problems to be Solved by the Invention

[0007] Accordingly, an aspect of the present disclosure is to provide a method and apparatus for providing a service for a home network system.

[0008] Another aspect of the present disclosure is to provide a home monitoring method and apparatus through a home network system.

[0009] Another aspect of the present disclosure is to provide a method and apparatus for monitoring circumstances in a house through an electrical appliance and an IP camera in a home network system.

Means for Solving Problems

[0010] In accordance with another aspect of the present disclosure, there is provided a home monitoring method by a home gateway included in a home network system, the method including: receiving, from a mobile terminal, a request message for requesting home monitoring; providing, to the mobile terminal in response to the request message, monitoring information associated with a camera module included in at least one home device registered in advance and/or a position to be monitored; receiving, from the mobile terminal, selection information indicating a first camera module selected based on the monitoring information; transmitting, to the mobile terminal, image data captured and collected by the first camera module in response to the reception of the selection information; receiving, from the mobile terminal, a control command with respect to the first camera module; and transmitting the control command to a first home device including the first camera module.

[0011] In accordance with another aspect of the present disclosure, there is provided a home monitoring method by a mobile terminal that is registered in a home gateway included in a home network system, the method including: transmitting a request message for requesting home monitoring to the home gateway; receiving, from the home gateway, monitoring information associated with a camera module included in at least one home device registered in advance and/or a position to be monitored, in response to the transmission of the request message; transmitting, to the home gateway, selection information indicating a first camera module selected based on the monitoring information; receiving, from the home gateway, image data captured and collected by the first camera module, in response to the transmission of the selection information; and transmitting, to the home gateway, a control command input by a user with respect to the first camera module.

[0012] In accordance with another aspect of the present disclosure, there is provided a home gateway apparatus that supports home monitoring in a home network system, the apparatus including: a network interface module that receives a request message for requesting home monitoring from a mobile terminal through wireless and wired networks, provides, to the mobile terminal, monitoring information associated with a camera module included in at least one home device registered in advance and/or a position to be monitored, in response to the request message, receives, from the mobile terminal, selection information indicating a first camera module selected based on the monitoring information, transmits, to the mobile terminal, image data captured and collected from the first camera module in response to the reception of the selection information, and receives a control command with respect to the first camera module from the mobile terminal; and at least one communication module that is configured to enable communication with a camera module included in at least one home device registered in the home network system, and that transmits the control command to a first home device equipped with the first camera module.

[0013] In accordance with another aspect of the present disclosure, there is provided a mobile terminal apparatus that executes home monitoring through a home gateway included in a home network system, the mobile terminal apparatus including: a mobile communication module that transmits a request message for requesting home monitoring to the home gateway through wireless and wired networks, receives, from the home gateway, monitoring information associated with a camera module included in at least one home device registered in advance and/or a position to be monitored, in response to the transmission of the request message, transmits, to the home gateway, selection information indicating a first camera module selected based on the monitoring information, receives, from the home gateway, image data captured and collected by the first camera module, in response to the transmission of the selection information, and transmits, to the home gateway, a control command input by a user with respect to the first camera module; and a display module that displays the image data.

BRIEF DESCRIPTION OF THE DRAWINGS

[0014] FIG. **1** illustrates a simplified structure of a home network system according to an embodiment of the present disclosure.

[0015] FIG. **2** illustrates a simplified configuration of a home network system that is capable of connecting with a mobile terminal according to an embodiment of the present disclosure.

[0016] FIG. **3** is a block diagram illustrating a schematic configuration of a home gateway according to an embodiment of the present disclosure.

[0017] FIG. **4** is a block diagram illustrating a schematic configuration of a mobile terminal according to an embodiment of the present disclosure.

[0018] FIG. **5** illustrates a schematic configuration of a home network system that supports home monitoring according to an embodiment of the present disclosure.

[0019] FIG. **6** illustrates a configuration of a mobile home device that is equipped with a camera according to an embodiment of the present disclosure.

[0020] FIG. **7** is a message flowchart illustrating a registration procedure of a home device according to an embodiment of the present disclosure.

[0021] FIG. **8** is a message flowchart illustrating a registration procedure of a mobile terminal according to an embodiment of the present disclosure.

[0022] FIG. **9** illustrates a home monitoring procedure that is performed in a home network system according to an embodiment of the present disclosure.

[0023] FIG. **10** illustrates a home monitoring procedure that is performed in a home network system according to another embodiment of the present disclosure.

[0024] FIG. **11** is a message flowchart illustrating a home monitoring procedure according to an embodiment of the present disclosure.

[0025] FIG. **12** is a message flowchart illustrating a home monitoring procedure according to another embodiment of the present disclosure.

[0026] FIG. **13** is a message flowchart illustrating a home monitoring procedure according to another embodiment of the present disclosure.

[0027] FIG. **14** illustrates a User Interface (UI) for executing a remote controlling application in a mobile terminal for home monitoring according to an embodiment of the present disclosure.

[0028] FIG. **15** illustrates a configuration of a screen for home monitoring of a remote controlling application according to an embodiment of the present disclosure.

[0029] FIG. **16** illustrates a configuration of a screen for home monitoring of a remote controlling application according to another embodiment of the present disclosure.

[0030] FIG. **17** illustrates a display of image data according to an embodiment of the present disclosure.

[0031] FIG. **18** illustrates a display of image data according to another embodiment of the present disclosure.

[0032] FIGS. **19***a* and **19***b* are screens illustrating a control of a mobile camera according to an embodiment of the present disclosure.

[0033] FIG. **20** illustrates an alarm for an abnormal circumstance associated with a home network system in a mobile terminal according to an embodiment of the present disclosure.

[0034] FIG. **21** illustrates a configuration of a screen for home monitoring of a remote controlling application according to another embodiment of the present disclosure.

[0035] FIG. **22** illustrates a display of an abnormal circumstance associated with a home network system in a mobile terminal according to another embodiment of the present disclosure.

[0036] FIG. **23** illustrates calculation of a movement vector of a mobile home device according to an embodiment of the present disclosure.

DETAILED DESCRIPTION OF THE EXEMPLARY EMBODIMENTS

[0037] Hereinafter, various embodiments of the present disclosure will be described in detail with reference to the accompanying drawings. Further, in the following description of the present disclosure, a detailed description of known functions and configurations incorporated herein will be omitted when it may make the subject matter of the present disclosure rather unclear. Then, terms described later are defined in consideration of the functions of the present disclosure, but may vary according to the intention or convention of a user or operator. Therefore, the definition needs to be determined based on the overall contents of the present specifications.

[0038] FIG. **1** illustrates a simplified structure of a home network system according to an embodiment of the present disclosure.

[0039] Referring to FIG. **1**, a home network system is configured to include home devices **110** having a control and communication function and a Home GateWay (HGW) **120**. The home devices **110** are located inside (or outside) a house, and include smart appliances **112**, security devices **114**, lighting devices **116**, energy devices **118**, and the like. For example, the smart appliances **112** correspond to a Television (TV), an air-conditioner, a refrigerator, a washing machine, a robot-cleaner, a humidifier, and the like. The security devices **114** correspond to a door-lock, a security camera, a Closed Circuit Television (CCTV), and a security sensor that senses a contact, a sound, a movement, and the like, the lighting devices **116** correspond to a Light Emitting Diode (LED), a lamp, and the like, and the energy devices **118** may correspond to a heater, a power meter, a power socket, an electrical outlet, a multiple-tap, and the like. In addition, the home devices **110** may include a Personal Computer (PC), an IP camera, an Internet phone, a wired/wireless phone, a mobile phone used in a home, a curtain or blind that may be electrically controlled, and the like.

[0040] The home devices **110** may be capable of performing communication with the home gateway **110** according to a wired or wireless communication scheme, and may be configured to receive a control command from the home gateway **120**, to operate based on the control command, and to transmit requested information and/or data to the home gateway **120**.

[0041] The home gateway **120** may be embodied as an independent apparatus, or an apparatus equipped with a home gateway function. For example, the home gateway **120** may be embodied as a television, a cellular phone, a tablet computer, a set-top box, a robot cleaner, or a personal computer. The home gateway **120** may be equipped with corresponding communication modules for performing communication with the home devices **110** based on a wired or wireless communication scheme, so as to register and store information associated with the home devices **110**, to manage and control operations, supportable functions, and states of the home devices **110**, and to collect and store required informa-

tion from the home devices **110**. Particularly, the home gateway **120** may be connected with a data network such as the Internet, that is, an IP network **130**, and allows a connection by a communication terminal through the Internet **130** and transfers a control signal received from the communication terminal to a corresponding home device. Also, the home gateway **120** may communicate with the communication terminal using a wireless communication scheme such as WiFi (Wireless Fidelity), Zigbee, Bluetooth, an NFC (Near Field Communication), and z-wave.

[0042] The home network system configured as described above may provide a home entertainment service, such as an Internet TV (IPTV) through the Internet **130**, a Video on Demand (VoD) and the like, a home data communication service such as data sharing, Voice over IP (VoIP), a video phone, and the like, and a home automation service such as remote control of an electrical appliance, a remote meter reading, crime prevention, disaster prevention and the like. That is, the home network system may connect all types of home devices used inside and outside a house through a single network for a control.

[0043] Meanwhile, a user may connect with a home gateway included in the home network system from the outside of the house using a communication terminal such as a mobile terminal, or may remotely connect with each home device through the home gateway. The mobile terminal may be, for example, a Personal Digital Assistant (PDA) including a communication function, a Smart Phone, a feature phone, a tablet Personal Computer (PC), a notebook and the like, and may access a home network system directly or through a provider's network and the Internet.

[0044] FIG. **2** illustrates a simplified configuration of a home network system that is capable of connecting with a mobile terminal according to an embodiment of the present disclosure.

[0045] Referring to FIG. **2**, the home devices **110** in the home network system connects with the home gateway **120** through a wired or wireless communication scheme. The home gateway **120** may connect with a wired network **230** such as the Internet. A registered mobile terminal **250** may connect with a wireless network **240** including a wireless access network and a provider core network, and may access the home gateway **220** through the wired network **230**. A wireless network **240** may be a 2G (Generation) or 3G cellular communication system, 3GPP (3rd Generation Partnership Project), a 4 G communication system, LTE (Long-Term Evolution), WiMAX (World Interoperability for Microwave Access), and the like. Also, the mobile terminal **250** may directly communicate with the home gateway **220** using a wireless communication scheme such as WiFi, Zigbee, Bluetooth, an NFC, and z-wave.

[0046] FIG. **3** is a block diagram illustrating a schematic configuration of a home gateway according to an embodiment of the present disclosure. A home gateway may be configured to include at least one of the illustrated component elements.

[0047] Referring to FIG. **3**, a home gateway **300** may be connected with home devices (not illustrated) using at least one communication module **312** through **314**. The communication modules **312** through **314** include at least one of a wireless LAN module **312** such as WiFi, a Zigbee module **314**, a Bluetooth module **316**, an NFC module **318**, and a wired communication module **320**. Also, the home gateway **300** includes a controller **310**, a network interface module **322**, a User Interface (UI) **324**, and a storage unit **326**.

[0048] The controller **310** includes a CPU (Central Processing Unit), a Read-Only Memory (ROM) storing a control program for controlling the home gateway **300**, and a Random Access Memory (RAM) used as a storage area for works performed in the home gateway **300**. The controller **310** may communicate with home devices through the communication modules **312** through **320** by executing programs stored in the ROM or RAM or application programs that may be stored in the storage unit **326**, and may generate and transmit a control command to the home devices or may store information collected from the home devices in the storage unit **326**.

[0049] The user interface **324** includes an output module such as a display, a speaker, and a notification lamp, and an input module such as a touch screen, a keypad, and a microphone, and may be used when a user directly controls the home gateway **300**, registers or deletes home devices in/from the home gateway **300**, or controls home devices through the home gateway **300**.

[0050] The network interface **322** may be, for example, an Internet communication module, and may connect the home gateway **300** to an external network.

[0051] The storage unit **326** is configured to store a program code, data, or information required for an operation of the home gateway **300**, under a control of the controller **310**, and may store a high capacity data transferred from external devices or home devices when needed. Also, the storage unit **326** may further store at least one of additional information required for controlling a home network system, for example, an arrangement plan (or a map) including an arrangement of sections included in a house (such as, a room, a kitchen, a living room, a bathroom, and the like), information associated with home devices included in a home network system, information associated with at least one target position to be secured and monitored, and movement commands for controlling a movement of a mobile home device.

[0052] FIG. **4** is a block diagram illustrating a schematic configuration of a mobile terminal according to an embodiment of the present disclosure. A mobile terminal may be configured to include at least one of the illustrated component elements.

[0053] Referring to FIG. **4**, a mobile terminal **400** is configured to include a controller **410**, a cellular mobile communication module **420**, a sub-communication module **422**, a multimedia module **428**, a camera module **436**, a GPS (Global Positioning System) module **438**, an input/output module **444**, a sensor module **442**, a storage unit **458**, a power supplier **440**, and at least one display module **460**. The sub-communication module **130** includes at least one of a wireless LAN module **424** and a short-distance communication module **426**, and the multimedia module **428** includes at least one of a broadcasting communication module **430**, an audio playback module **432**, and a video playback module **434**. The camera module **436** includes at least one camera, and the input/output module **444** includes at least one of a button set **446**, a microphone **448**, a speaker **450**, a vibration motor **452**, a connector **454**, and a keypad **456**.

[0054] The controller **410** includes a CPU, a ROM storing a control program for controlling the mobile terminal **400**, and a RAM used as a storage area for storing a signal or data input from the outside of the mobile terminal **400** or for storing works performed in the mobile terminal **400**, and may control other component elements of the mobile terminal **400**.

[0055] The cellular mobile communication module **420** connects the mobile terminal **400** to an external apparatus

(particularly, a base station of a cellular system) through at least one or a plurality of antennas (not illustrated), using a wireless access technology based on a cellular communication protocol according to a control of the controller **410**. The cellular mobile communication module **420** transmits/receives a wireless signal including a voice call, a video call, a Short Messaging Service (SMS) message, or a Multimedia Messaging Service (MMS) message to/from another apparatus that is capable of performing communication.

[0056] The wireless LAN module **424** may connect with the Internet according to a control of the controller **410** in a place where a wireless AP (access point) (not illustrated) is installed. The short-distance communication module **426** may execute a wireless short-distance communication between the mobile terminal **400** and an external apparatus according to a control of the controller **410**. A short-distance communication scheme may include Bluetooth, Zigbee, IrDA (infrared data association) and the like.

[0057] The display **460** displays information associated with various applications (for example, calling, data transmission, broadcasting, a camera, and the like) that may be executed by the controller **410**, and may be configured as a touch screen that provides a user interface that is configured to be adjusted to the same. The controller **410** may enable a soft key displayed on the touch screen **460** to be selected or may execute an application or a function corresponding to the soft key, in response to a user gesture sensed on the touch screen. The user gesture includes a touch by a finger or an instrument, motion recognition by a body part, and the like.

[0058] A user located in the outside may desire a home network system configured as described above to execute a monitoring function with respect to the circumstances in a house. In this case, the user may connect with a home gateway using a mobile terminal or a computing apparatus, and may monitor the circumstances in the house by controlling at least one of the registered home devices through the home gateway.

[0059] FIG. **5** illustrates a schematic configuration of a home network system that supports home monitoring according to an embodiment of the present disclosure.

[0060] Referring to FIG. **5**, a home network system **500** includes a home gateway **510**, at least one stationary home device **512***a* and **512***b* (commonly called **512**) equipped with a camera module (or a stationary camera), and at least one mobile home device equipped with a camera module (or a mobile camera) **514**. The stationary home device **512** may be a Closed Circuit Television (CCTV) installed in a predetermined location such as a wall or a ceiling, an electrical appliance equipped with a camera module such as an air-conditioner or refrigerator, and the like, and may be connected with the home gateway **510** through a wired interface or may be connected with the home gateway **510** through a wireless interface.

[0061] The mobile home device **514** may be a robot cleaner, a mobile toy, or the like that includes a movement function, and may be connected with the home gateway **510** through a wireless interface and moves based on a control of the home gateway **510**. At least one of the home devices **512** and **514** includes a function of sensing a movement through a camera or a sensor, and may report a movement sensing result to the home gateway **510**. Also, at least one of the home devices **512** and **514** may be equipped with a light such as an LED so as to capture an image in a dark room.

[0062] In addition, one or more sensing modules **516** that are installed in a position that requires monitoring may be connected with the home gateway **510** through a wired or wireless interface. The sensing module **516** may be a door sensor that senses intrusion through a front door, a magnetic sensor that senses breaking into a window, a ultrasonic sensor, a gas sensor that senses a leakage of gas from a gas range or the like, a heat sensor that senses a fire, a movement sensor that senses a movement of an intruder or a pet, a microphone that senses an abnormal sound, and the like, and may include a signal transmitting module that monitors occurrence of various abnormal circumstances, and wiredly or wirelessly transmits an abnormal signal including corresponding identification information when a corresponding abnormal circumstance is sensed. For example, the sensing module **516** may be installed in a fixed position that requires monitoring or may be included in a mobile home device. The abnormal signal may be collected by the home gateway **510** or may be directly transferred to the home devices **512** and **514** equipped with a camera.

[0063] The home gateway **510** registers information associated with the home devices **512** and **514**, and manages states. When providing the stationary home device **512**, the home gateway **510** may register and manage a position where the home device **512** is installed, for example, a first CCTV in a main room, and second and third CCTVs in a living room. When providing the mobile home device **514**, the home gateway **510** registers and manages a docking position of the home device **514** (for example, a charger of a robot cleaner), and additionally senses and traces a current position of the home device **514** using an RF (Radio Frequency) tag, a sensor, a camera included in the home device **514**, and the like.

[0064] Also, the home gateway **510** may transmit, to the home device **514**, a movement command for controlling a movement, and may store a history of the movement command together with time information. For example, the home gateway **510** stores movement commands that instruct the home device **514** to move from a docking position to at least one position to be monitored, and to return to the docking position again. The at least one position to be monitored may be, for example, a place where a stationary sensing module is not installed, a place that is vulnerable to security, or a place where a child or a pet exists, and may be set by a user. As another example, the home gateway **510** may set the home device **514** to patrol a path between a docking position and a position (or positions) to be monitored when the home network system is operated in a security mode.

[0065] The home gateway **510** may collect image data captured through cameras included in the home devices **512** and **514**. Collecting the image data may be continuously executed in real time or may be begun based on a predetermined event condition. The image data may be stored in the home gateway **510** or an external storage apparatus during a predetermined period of time or until it is deleted by a user.

[0066] A user may connect with the home gateway **510** through the Internet **520** using a personal computer **522** in an office, and may check image data collected by the home gateway **510**. Also, the user may connect with the home gateway **510** through a wireless network **530** and the Internet **520** using a mobile terminal **532** in a mobile environment, and may determine image data collected by the home gateway **510**.

[0067] When directions of cameras included in the stationary home devices **512** are adjustable, a user transmits a control command to the home gateway **510** through the personal computer **522** or the mobile terminal **532**, and the home

gateway **510** transfers the control command to a corresponding home device **512**. The control command may include at least one of an upper/lower/left/right side adjusting command for adjusting directions of stationary cameras and a zooming-in/out (Zoom In/Out) command. Then, the home device **512** controls a camera lens in response to the control command, and transfers image data captured through the controlled camera lens to the home gateway **510**.

[0068] Also, the user transmits, to the home gateway **510**, a control command for controlling a movement of a mobile camera (or a mobile home device **514** equipped with a camera module) **514** through the personal computer **522** or the mobile terminal **532**, and the home gateway **510** transfers the control command to a corresponding home device **514**. The control command includes a left/right rotation command, a forward/backward movement command, and/or a zooming in/out command for a movement of the home device **514**. Then, the home device **514** controls or moves a camera lens in response to the control command, and transfers image data captured through the controlled camera lens to the home gateway **510**.

[0069] FIG. **6** illustrates a configuration of a mobile home device that is equipped with a camera according to an embodiment of the present disclosure. Here, a configuration of a home device embodied as a robot cleaner is illustrated. The robot cleaner may be configured to include at least one of the illustrated component elements.

[0070] Referring to FIG. **6**, a robot cleaner **600** is configured to include a controller **610**, a camera module **612**, a user interface **614**, a sensor module **616**, a communication module **618**, a storage unit **620**, a cleaning motor **622**, a movement motor **624**, a direction motor **626**, and a power supplier **628**.

[0071] The controller **610** includes a CPU, a ROM storing a control program for controlling a cleaning function and a movement of the robot cleaner **600**, and a RAM used as a storage area for storing a signal or data input from the outside of the robot cleaner **600** or for storing works performed in the robot cleaner **600**, may control a function of the robot cleaner **600** based on a stored control program or a control command received from the outside, and may control the communication module **618** to transmit image data collected by the camera module **612** to a designated destination.

[0072] The camera module **612** is fixedly mounted on a predetermined position on an outer side of the robot cleaner **600**, and provides image data generated by capturing an ambient image. The camera module **612** may be configured to mechanically adjust a direction of a photography lens, and may adjust a direction of the photography lens to an upper/lower/left/right side by a predetermined degree, or may execute zooming in/out, in response to the control command from the controller **610**.

[0073] The user interface **614** is configured to include a key input unit to set on/off of a power of the robot cleaner **600**, an unique function of the robot (for example, a cleaning function and the like), and a display unit indicating a state, a function, a communication state, and the like of the robot cleaner **600**. The sensor module **616** is configured to include a heat sensor, a motion sensor, or the like, and reports, to the controller **610**, that a motion is sensed when the motion is sensed within a detectable range. The communication module **618** is configured to include a mobile communication module and/or a wireless LAN communication module, and may transmit and receive a wireless signal to/from a home gateway and/or an external apparatus. In particular, the communication module **618** receives a control command from a home gateway through a wireless LAN or Zigbee, and may transmit image data collected by the camera module **612** to the home gateway through a wireless LAN or a mobile communication scheme.

[0074] The storage unit **620** may store image data captured by the camera module **612** under a control of the controller **610** during a predetermined period of time or up to a predetermined capacity, and may temporarily store data processed for image monitoring by the robot cleaner **600**. Also, the storage unit **620** may further include at least one of additional information required for a movement of the robot cleaner **600**, for example, an arrangement plan including an arrangement of a room, a kitchen, a living room, and a bathroom in a house, information associated with a docking position, for example, a charging system, information associated with at least one target position to be monitored, and movement commands for a movement between the docking position and the target position.

[0075] The cleaning motor **622** is operated based on a control of the controller **610** and executes a cleaning function of the robot cleaner **600**. The movement motor **624** is operated based on a control of the controller **610**, so as to enable the robot cleaner **600** to move forward or backward. The direction motor **626** is operated based on a control of the controller **610**, so as to enable the robot cleaner **600** to change a direction of a movement. The power supplier **628** supplies a voltage stored in a rechargeable battery to each operation circuit required for driving the robot cleaner **600**, and charges the rechargeable battery with power supplied from the outside.

[0076] In the home network system configured as shown in FIG. **5**, a home gateway registers information associated with home devices installed inside/outside a house, and controls and manages the registered home devices. For example, when a new home device is installed, the home gateway collects and stores at least one of information associated with the home device, for example, an identifier of the home device, positional information, capacity information, and state information. The information associated with the home device may be directly obtained from the home device through a service discovery procedure between the home gateway and the home device, may be received by the home gateway from a server on the Internet based on identification information provided from the home device, or may be directly input to the home gateway by a user or a system administrator. For example, when a user purchases and installs a new home device, and inputs, into the home gateway, identification information provided through instructions, for example, a serial number, a model number, a Quick Response (QR) code, the home gateway may connect with a server of a manufacturer on the Internet based on the identification information so as to obtain the information associated with the home device.

[0077] FIG. **7** is a message flowchart illustrating a registration procedure of a home device according to an embodiment of the present disclosure.

[0078] Referring to FIG. **7**, a home device is installed and power is supplied first in step **702**. Alternatively, a user determines to register a previously installed home device in a home gateway. In step **704**, the home gateway executes a search procedure for a home device. For example, when providing that the home device is connected with the home gateway through WiFi, the home gateway executes a search procedure for a new device around the home gateway, periodically or in response to a request from a user. When a home device is detected by the home gateway through the search procedure,

the home gateway may receive information associated with the home device from the home device. The information associated with the home device includes at least one of an identifier of the home device, capacity information, and state information. For example, when the home device is a security camera, the capacity information includes whether an angle of the security camera is adjustable, whether the security camera supports zooming in/out, and the like. The state information includes a position where the security camera is installed.

[0079] As an optional embodiment, in step **706**, the home gateway receives a registration request associated with a home device to be registered, directly from a user through an its own user interface, a control console connected by an external interface, or a computer on the Internet, and receives an input of information associated with the home device from the user. As another embodiment, the home gateway may obtain identification information associated with a home device and/or state information from the home device or a user, and may obtain capacity information associated with the home device by connecting with a server of a manufacturer on the Internet based on the identification information.

[0080] In step **708**, the home gateway stores the information associated with the home device, and manages the home device as a registered home device. As an optional embodiment, the home gateway may receive an input of additional information associated with the home device directly from a user or from a remote control terminal through the Internet or WiFi. The additional information may include at least one of, for example, a name or a nickname of the home device, and a position where the home device is installed.

[0081] As another optional embodiment, the home gateway may receive an input of additional information associated with a mode and/or authority of the home device directly from a user or from a remote control terminal through the Internet or WiFi. The additional information includes, for example, a level of access right with respect to the home device. The level of the access right includes, for example, a priority of authority, allowing only an access through a home gateway, allowing an access by a registered remote control terminal, allowing an access by a remote control terminal registered in the home gateway, or the like.

[0082] In step **710**, the home gateway sets a connection with the home device when needed. Setting of the connection may be executed based on a procedure determined in a communication scheme between the home gateway and the home device, that is, WiFi, Zigbee, Bluetooth, NFC, or a wired communication scheme. As described above, when a connection between the home gateway and the home device is set, in step **712**, the home device may transmit data to the home gateway through the set connection when needed. As an embodiment, when the home device is a security camera or an electrical appliance equipped with a security camera function, the home device transmits captured image data to the home gateway in real time. Also, when needed, in step **714**, the home gateway transmits a control command to the home device. As an example, the home gateway transmits an angle adjusting command and/or zooming in/out command for a security camera included in a home device, and the home device adjusts an angle of a camera lens or executes zooming in/out in response to the command, and continuously transmits image data captured in the adjusted condition. As another embodiment, when the home device is an air-conditioner, the control command may include a desired temperature, a desired wind intensity, an operation time, a scheduled time, and the like. According to a communication scheme that is applied, the home device may provide the home gateway with a result of execution of the control command as a response.

[0083] In the home network system configured as shown in FIG. **5**, a user registers a Personal Computer (PC) or a mobile terminal (Mobile Station (MS)) for remote controlling in the home gateway, and the home gateway restrictively allows remote controlling by the registered PC or mobile terminal. As an example, the user may register, in the home gateway, a mobile terminal to be used for remote controlling, manually or through use of a mobile communication network or WiFi, and the home gateway receives and stores information associated with the mobile terminal, for example, an identifier of the mobile terminal, authority for remote controlling, and information associated with a user mode. The information associated with the mobile terminal may be obtained directly from the mobile terminal through a connection between the home gateway and the mobile terminal, may be received by the home gateway from a server of a wireless communication system based on identification information provided from the mobile terminal, or may be input directly to the home gateway from a user or a system administrator.

[0084] FIG. **8** is a message flowchart illustrating a registration procedure of a mobile terminal according to an embodiment of the present disclosure.

[0085] Referring to FIG. **8**, a mobile terminal installs a remote controlling application (hereinafter referred to as an app) that supports controlling of a home network system in step **802**. As an optional embodiment, installation of the remote controlling app may be limited to only a mobile terminal of a user that passes a predetermined authentication procedure. As an example, the home gateway provides an authentication code, and the home gateway, a server of a manufacturer of the home gateway, or a server for providing a remote controlling app allows downloading of the remote controlling app only to a mobile terminal of a user who inputs the authentication code. As another optional embodiment, the remote controlling application may restrictively provide a function based on an authority level of a mobile terminal. As an example, the remote controlling app may selectively provide, based on an authority level permitted by the home gateway, at least one of the functions of inquiring about information through the home gateway, receiving an alarm from the home gateway, partially controlling home devices, and completely controlling home devices.

[0086] In step **804**, the mobile terminal executes the remote controlling app, and transmits, to the home gateway, a registration request message through the remote controlling app. The remote controlling app may be transferred to the home gateway through the Internet, or may be directly transferred to the home gateway through WiFi. The registration request message includes an identifier of the mobile terminal (for example, an MSID (MS Identifier) or IMSI (International Mobile Subscriber Identify)), a login ID and password, authority information, and mode information. The authority information indicates a level of access right with respect to a home network system, for example, allowing inquiring about information through the home gateway, allowing receiving of an alarm from the home gateway, partially allowing controlling on home devices, and completely allowing controlling on home devices.

[0087] As an optional embodiment, in step **806**, the home gateway receives the registration request associated with the mobile terminal to be registered, from a user through an its own user interface, a control console connected by an external interface, or a computer on the Internet, and receives an input of information associated with the mobile terminal, for example, authority information and/or mode information from the user.

[0088] As an optional embodiment, in step **808**, the home gateway connects with a subscriber server of a mobile communication network based on identification information associated with the mobile terminal obtained from the mobile terminal or a user, so as to authenticate the mobile terminal. When the authority information of the mobile terminal is not input, the home gateway may generate authority information associated with the mobile terminal based on a result of the authentication.

[0089] In step **810**, the home gateway stores the information associated with the mobile terminal, and manages the mobile terminal as a registered mobile terminal. In step **812**, the home gateway transmits, to the mobile terminal, a registration approval message indicating that registration of the information associated with the mobile terminal succeeds.

[0090] In step **814**, when needed, the home gateway may transmit, to the mobile terminal, data required for remote controlling. As an embodiment, the home gateway transmits, to the mobile terminal, image data captured by at least one security camera installed inside/outside a house, in real time, periodically, or in an event triggering manner. As another embodiment, the home gateway transmits, to the mobile terminal, state information associated with a light in/around a house, power consumption, and an open/shut state of a door, in real time, periodically, or in an event triggering manner. In step **816**, when needed, the mobile terminal transmits, to the home gateway, a control command for the home gateway or at least one home device. As an example, the mobile terminal requests the home gateway to transmit image data captured by a security camera installed in a predetermined position in real time. As another embodiment, the mobile terminal transmits an angle adjusting command and/or a zooming in/out command to a security camera through the home gateway.

[0091] FIG. **9** illustrates a home monitoring procedure that is performed in a home network system according to an embodiment of the present disclosure.

[0092] Referring to FIG. **9**, a home network system **900** includes a home gateway **910**, at least one stationary home device **912***a* and **912***b* (commonly called **912**) equipped with a camera, and at least one mobile home device **914** equipped with a camera. The stationary home device **912** may be a CCTV installed in a predetermined position such as a wall or a ceiling, an electrical appliance equipped with a camera module such as an air-conditioner or a refrigerator, and the like, and may be connected with the home gateway **910** through a wired interface or may be connected with the home gateway **910** through a wireless interface. The mobile home device **914** may be a robot cleaner, a mobile toy, or the like that includes a movement function, and may be connected with the home gateway **910** through a wireless interface.

[0093] The home gateway **910** may operate the home network system **900** in a security mode based on a request from a user or a predetermined setting. When the security mode is begun, the home device **912** and **914** equipped with a camera begins capturing image data, and stores the image data or reports the image data to the home gateway **910**. As an embodiment, when the security mode is begun, the home gateway **910** instructs the mobile home device **914** to move to a predetermined position that is set in advance, for example, a window in a kitchen, a back door, or the like, and to execute capturing image data and a sensing function, in response to a request from a user. In particular, the mobile home device **914** may be used for strengthening monitoring of a position where a stationary sensing module is not installed and is vulnerable to security.

[0094] When a user who is located outside the home network system **900** desires to check circumstances inside/around a house, the user may executes a remote controlling app that supports home monitoring through a mobile terminal **922** and selects a home monitoring function. Then, in step **930**, the mobile terminal **922** connects with the home gateway **910** directly or through a network **920**, and transmits a request message for requesting home monitoring to the home gateway **910**. In step **932**, the home gateway **910** collects image data from at least one home device **912** and **914** equipped with a camera, in response to the request message. In step **934**, the home gateway **910** transmits, to the mobile terminal **922**, the image data collected from the at least one home device **912** and **914**. The mobile terminal **922** displays the image data so that a user checks the image data.

[0095] As an embodiment, the home gateway **910** collects the image data from all of the home devices **912** and **914** equipped with a camera in a system, and provides the image data to the mobile terminal **922**. As another embodiment, the home gateway **910** collects the image data from at least one home device **912** and **914** registered in advance for home monitoring, and provides the image data to the mobile terminal **922**.

[0096] The image data may be transferred in an original resolution or in a form of a compressed small resolution, based on a setting of a remote controlling app executed in the mobile terminal **922**. When the home device **912** and **914** transmits image data to the home gateway **910** in real time, and the home gateway **910** stores the image data, the home gateway **910** transmits, to the mobile terminal **922**, the image data collected in real time without a request for transmission of the image data. As another embodiment, when the home gateway **910** receives a request message for requesting home monitoring from the mobile terminal **922**, the home gateway **910** requests at least one home device **912** and **914** to transmit image data and receives the image data from the home device **912** and **914** in response to the request.

[0097] In step **936**, the mobile terminal **922** transmits, to the home gateway **910**, a control command for selecting an image of another camera, or for adjusting a position, an angle, a zoom of a predetermined camera. In step **938**, the home gateway **910** transfers the control command to a home device (for example, the home device **914**) equipped with a selected camera. The home device **914** transfers, to the home gateway **910**, image data captured after moving or controlling a camera lens in response to the control command in step **940**, and the home gateway **910** transfers the image data to the mobile terminal **922** in step **942**. The mobile terminal **922** displays the image data so that the user checks the image data.

[0098] FIG. **10** illustrates a home monitoring procedure that is performed in a home network system according to another embodiment of the present disclosure.

[0099] Referring to FIG. **10**, a home network system **1000** includes a home gateway **1010**, at least one stationary home device **1012** equipped with a camera, and at least one mobile

home device **1014** equipped with a camera. The stationary home device **1012** may be a CCTV installed in a predetermined position such as a wall or a ceiling, an electrical appliance equipped with a camera module such as an air-conditioner or a refrigerator, and the like, and may be connected with the home gateway **1010** through a wired interface or may be connected with the home gateway **1010** through a wireless interface.

[0100] The mobile home device **1014** may be a robot cleaner, a mobile toy, or the like that includes a movement function, and may be connected with the home gateway **1010** through a wireless interface. At least one of the home devices **1010** and **1014** includes a function of sensing a movement through a camera or a sensor, and may report a movement sensing result to the home gateway **1010**. Also, at least one of the home devices **1012** and **1014** may be equipped with a light such as an LED so as to capture an image in a dark room.

[0101] One or more sensing modules **1016** may be installed in a position that is determined to be monitored or may be included in the mobile home device **1014**, and may be connected with the home gateway **1010** through a wired or wireless interface. The sensing module **1016** may be a door sensor that senses intrusion through a front door, a magnetic sensor that senses breaking into a window, a ultrasonic sensor, a gas sensor that senses a leakage of gas from a gas range or the like, a heat sensor that senses a fire, and a movement sensor that senses a movement of an intruder or a pet, and may include a signal transmitting module that wiredly or wirelessly transmits an abnormal signal including corresponding identification information when an abnormal circumstance is sensed while a home network system operates in a security mode. The abnormal signal may be collected by the home gateway **1010** or may be directly transferred to the home devices **1012** and **1014** equipped with a camera.

[0102] The home gateway **1010** may operate the home network system **1000** in a security mode based on a request from a user or a predetermined setting. When the security mode is begun, the home device **1010** and **1014** equipped with a camera begins capturing image data, and stores the image data or reports the image data to the home gateway **910**. The home gateway **1010** may store movement commands that instruct the mobile home device **1014** to arrive on at least one target position that requires additional monitoring, for example, a position where a sensing module is not installed, a position having a high probability of intrusion, a place where a child or pet exists, or the like, together with time information. The mobile home device **1014** may be configured to execute capturing image data and a sensing operation by patrolling a path between a docking position and at least one target position when a security mode operates. The mobile home device **1014** may store the movement commands by itself.

[0103] In the security mode, the sensing module **1016** begins a sensing operation.

[0104] In step **1030**, the sensing module **1016** senses an abnormal circumstance, and transmits, an abnormal signal including its identification information to the home gateway **1010**. As an optional embodiment, when the home gateway **1010** is capable of identifying an identity or a position of the sensing module **1016** through a wired or wireless connection, transmission of the identification information may be omitted.

[0105] In step **1032**, the home gateway **1010** transmits an alarm message associated with an abnormal circumstance to at least one registered mobile terminal **1022** in response to the reception of the abnormal signal, and the mobile terminal **1022** may display or output a warning message in response to the reception of the alarm message from the home gateway **1010**. As an optional embodiment, the home gateway **1010** determines whether to inform the mobile terminal **1022** of an abnormal circumstance sensed by the sensing module **1016**, based on scenarios registered in advance. As an embodiment, when a user goes out, the user may register, in the home gateway **1010**, a scenario in which a child or a pet is located in a main room. Then, the home gateway **1010** determines heat or a movement sensed from the main room as a normal circumstance, and determines not to transmit an alarm message to the mobile terminal **1022**. As another embodiment, when food is being cooked or is scheduled to be cooked in a kitchen, a user may register, in the home gateway **1010**, a scenario in which heat is generated in a kitchen. Then, the home gateway **1010** determines heat or a movement sensed from the kitchen as a normal circumstance, and determines not to transmit an alarm message to the mobile terminal **1022**. When a circumstance besides the registered scenario happens, the home gateway **1010** determines to inform the mobile terminal **1022** of an abnormal circumstance. As another embodiment, when a circumstance corresponding to a registered abnormal scenario happens, such as sensing that a front door or a window is open, sensing a movement, and the like, the home gateway **1010** determines to inform the mobile terminal **1022** of an abnormal circumstance.

[0106] In step **1034**, the mobile terminal **1022** executes a remote controlling app that supports home monitoring, automatically or based on an input of a user (a touch or a voice), in response to the reception of the alarm message from the home gateway **1010**, so as to connect with the home gateway **1010** through the network **1020**, and to transmit, to the home gateway **1010**, a request message for requesting home monitoring.

[0107] The home gateway **1010** collects image data from at least one home device **1012** and **1014** equipped with a camera, in response to the request message in step **1036**, and transmits the collected image data to the mobile terminal **1022** in step **1038**. The mobile terminal **1022** displays the image data so that a user checks the image data.

[0108] As an embodiment, the home gateway **1010** collects image data from the at least one home device **1012** and **1014** that is registered in advance and located in an identical space (for example, a room) where the sensing module **1016** that senses an abnormal circumstance exists, and provides the collected image data to the mobile terminal **1022**. As another embodiment, the home gateway **1010** collects image data from all of the home devices **1012** and **1014** equipped with a camera, and provides the image data to the mobile terminal **1022**. As another embodiment, the home gateway **1010** collects the image data from at least one home device **1012** and **1014** registered in advance for home monitoring, and provides the image data to the mobile terminal **1022**.

[0109] The image data may be transferred in an original resolution or in a form of a compressed small resolution, based on a setting of a remote controlling app executed in the mobile terminal **1022**. When the home device **1012** and **1014** transmits image data to the home gateway **1010** in real time, and the home gateway **1010** stores the image data, the home gateway **1010** transmits, to the mobile terminal **1022**, the image data collected in real time without a request for transmission of the image data. As another embodiment, when the

home gateway **1010** receives a request message for requesting home monitoring from the mobile terminal **1022**, the home gateway **1010** requests at least one home device **1012** and **1014** to transmit image data and receives the image data from the home device **1012** and **1014** in response to the request.

[0110] In step **1040**, the mobile terminal **1022** transmits, to the home gateway **1010**, a control command for selecting an image of another camera, or for adjusting a position, an angle, a zoom of a predetermined camera. In step **1042**, the home gateway **1010** transfers the control command to a home device (for example, the home device **1014**) equipped with a selected camera. The home device **1014** transfers, to the home gateway **1010**, image data captured after moving or controlling a camera lens in response to the control command in step **1044**, and the home gateway **1010** transfers the image data to the mobile terminal **1022** in step **1046**. The mobile terminal **1022** displays the image data so that a user checks the image data.

[0111] When an abnormal signal is received from the sensing module **1016**, the home gateway **1010** may transmit an alarm message to the mobile terminal **1022** and may transmit an alarm message to an emergency rescue center **1024** in step **1048**. The alarm message includes information associated with an abnormal circumstance and a location where an abnormal circumstance occurs (a home address and the like), and may be transmitted to the emergency rescue center **1024** through the network **1020** such as the Internet. Contacts (a phone number, a destination IP address, and the like) of the emergency rescue center **1024** may be set in advance in the home gateway **1010** by a user or a manufacturer. The emergency rescue center **1024** may be, for example, a police station, a police box, a fire station, a 119 center, a fire station, or a security office or a private security service company of an apartment, a building, and the like corresponding to a building complex or a collective housing.

[0112] FIG. **11** is a message flowchart illustrating a home monitoring procedure according to an embodiment of the present disclosure.

[0113] Referring to FIG. **11**, in step **1102**, a mobile terminal executes a remote controlling app including a home monitoring function in response to a request from a user (a touch input or a voice command) or according to an execution condition set in advance. When the remote controlling app is executed, the remote controlling app connects with a home gateway to execute a login procedure or determines a login procedure performed in advance to permit a connection with the home gateway. In step **1104**, the home gateway collects and stores image data from at least one home device that includes a camera module and is installed in a home network system, in real time or periodically, irrespective of a request for home monitoring from the mobile terminal.

[0114] In step **1106**, the mobile terminal transmits a home monitoring request message to the home gateway through the remote controlling app. The home monitoring request message includes at least one of a login ID and password for a connection with the home gateway, an identifier of the mobile terminal, and authentication information obtained in advance. As an optional embodiment, when a request for a section where a user desires to monitor (room 1/room 2/kitchen/living room and the like) is input, the home monitoring request message may further include information associated with the section where the user desires to monitor.

[0115] In step **1108**, the home gateway determines authority of the mobile terminal in response to the home monitoring request message, and when the mobile terminal has an authority level that is capable of receiving image data for home monitoring, transfers, to the mobile terminal, monitoring information associated with positions to be monitored in a house and/or at least one home device including a camera module. The monitoring information may include positions that may be monitored or is being monitored (for example, a room/living room/kitchen and the like) and camera information associated with each installed camera module. The camera information includes at least one of a position, a type (for example, a mobile/stationary type and the like) and a state (for example, an activated/deactivated state, a state of being charged, a movable state, a wireless signal intensity measured by a home gateway, and the like). The monitoring information may further include a thumbnail still image or thumbnail video of image data collected by each camera module.

[0116] In step **1110**, the mobile terminal identifies the monitoring information through the remote controlling app, and selects a place or camera that is desired to be checked. In step **1112**, the mobile terminal transmits, to the home gateway, the home monitoring request message including indication information that indicates the selected place or camera.

[0117] When image data is not reported from a home device associated with a place or a camera module requested by the indication information, the home gateway requests the home device corresponding to the indication information to transmit the image data in response to the home monitoring request message in step **1114**. When it is determined that a home device having a camera module does not exist in the place requested by the indication information, the home gateway transmits an image request including a command that instructs a home device having a camera module and a moveable means, for example, a robot cleaner or a mobile toy, to move to the requested place and to collect an image. In step **1116**, the home gateway receives image data from a corresponding home device. When the home gateway collects image data from a home device in real time, step **1114** may be omitted.

[0118] In step **1118**, the home gateway transmits, to the mobile terminal, image data associated with a place or a camera requested by the mobile terminal, and the mobile terminal displays the image data to enable a user to check the image data. As an embodiment, the image data may be transmitted to the mobile terminal, together with a name of a corresponding place, camera information associated with a corresponding camera module, or identification information of a home device equipped with a camera module. The mobile terminal may display the image data together with the name of the place, camera information, and/or identification information.

[0119] As an optional embodiment, when the mobile terminal transmits information associated with a section (room 1/room 2/kitchen/living room and the like) for which monitoring is desired, through the home monitoring request message of step **1106**, steps **1108** through **1112** may be omitted, and the home gateway may proceed with step **1118** so as to transmit, to the mobile terminal, image data captured by a camera installed in a corresponding section.

[0120] While displaying the image data, the mobile terminal may receive an input of a command for controlling a predetermined camera from a user. The control command includes at least one of adjusting an angle of a camera, zooming in/out, and moving a home device equipped with a camera, and may further include indication information indicat-

ing a camera that is desired to be controlled. As an optional embodiment, the control command may further include a command for controlling an operation of a predetermined home device equipped with a camera. As an embodiment, when the home device is a moveable robot cleaner, the mobile terminal receives, from a user, an input of a command for executing cleaning through a voice or manipulating a screen, and generates a control command corresponding to the input command.

[0121] The mobile terminal transmits, to the home gateway, a control command input by a user with respect to a predetermined home device in step **1120**, and the home gateway transmits the control command to the corresponding home device in step **1124**. In step **1126**, the home device adjusts an angle of a camera to an upper/lower/left/right side, executes zooming in/out, executes left/right rotation, or executes forward/backward movement, in response to the control command. As an embodiment, when the home device is a robot cleaner and the control command instructs to generate an alarm sound, the robot cleaner outputs an alarm sound in response to the control command from the home gateway. Although it will not be illustrated, as an optional embodiment, the home device reports, to the home gateway, an execution result (a progress of execution, execution being completed, and execution being impossible) associated with the control command, and the home gateway transfers the execution result to the mobile terminal.

[0122] The home device executes an operation associated with the control command, and continuously transmits image data to the home gateway in step **1128**, and the home gateway transfers the image data to the mobile terminal so that the mobile terminal displays the image data in step **1130**. The image data may be transmitted to the mobile terminal, together with camera information associated with a corresponding camera module or identification information associated with a corresponding home device.

[0123] FIG. **12** is a message flowchart illustrating a home monitoring procedure according to another embodiment of the present disclosure.

[0124] Referring to FIG. **12**, in step **1202**, at least one of the sensing modules installed in a home network system senses a corresponding abnormal circumstance, and reports an alarm including identification information of itself to a home gateway through a wired or wireless interface. In step **1204**, the home gateway determines whether to inform at least one registered mobile terminal of the abnormal circumstance, in response to the alarm report. As an example, the home gateway may determine to inform a mobile terminal of abnormality when the generation of the alarm does not belong to a normal scenario registered in advance. When it is determined that the alarm belongs to the normal scenario, the home gateway does not inform the mobile terminal of the abnormal circumstance, and stores a sensed state (a movement, heat, a temperature, and the like) and a sensed position (a window, a room, a kitchen, a front door, and the like) associated with the alarm, together with time information. As another example, the home gateway may determine to inform a mobile terminal of abnormality when the generation of the alarm belongs to an abnormal scenario registered in advance.

[0125] In step **1206**, the home gateway may inform at least one registered mobile terminal of an alarm message indicating the abnormal circumstance associated with the alarm. As an embodiment, the home gateway may inform, of the alarm, only at least one mobile terminal that has an access right set to allow reception of an alarm from among the registered mobile terminals. The alarm message of the abnormal circumstance may include information associated with a sensed state (a movement, heat, a temperature, and the like) and a sensed position (a window, a room, a kitchen, a front door, and the like) associated with the alarm.

[0126] When the home gateway does not collect and store image data in real time from at least one home device that includes a camera module and is installed in a house, the home gateway requests at least one home device in a home network system to start capturing and transmitting image data in response to the report of the alarm in step **1210**. As an embodiment, the home gateway may request image data from a home device located in an identical space where the alarm is generated and/or an adjacent place, based on positional information associated with home devices registered in advance. As another embodiment, the home gateway requests all of the home devices equipped with a camera module in the system to collect and report image data.

[0127] When the sensing module that senses the abnormal circumstance in step **1202** is installed in a mobile home device including a camera module, the home gateway instructs the corresponding mobile home device to interrupt patrolling and to continuously collect image data at a corresponding place. When a home device including a camera module does not exist in a place/space where abnormality is sensed, the home gateway may instruct a mobile home device including a camera module, for example, a robot cleaner or a mobile toy, to move to the place where the abnormality is sensed and to collect and report an image, in step **1216**. To this end, the home gateway may store movement commands in advance for moving a mobile home device from a docking position to predetermined positions. As another embodiment, the movement commands may be stored in a mobile home device, and the mobile home device may execute the movement commands based on a previously set rule, when the mobile home device is operated in a security mode.

[0128] In step **1212**, the home gateway begins receiving image data from a corresponding home device, and stores the received image data.

[0129] As another embodiment, the home gateway may request all of the home devices including a camera module to capture and report image data, in response to the reception of the alarm of step **1202**. The home gateway analyzes the reported image data, and combines a result of analysis of the image data and states of sensing modules so as to determine whether an abnormal circumstance occurs. As an example, the home gateway determines whether a person exists in a house, and may determine whether a person enters through a normal path based on states of the sensing modules. When it is determined as an abnormal circumstance, the home gateway may operate based on a determined procedure. As an example, the home gateway transmits a text/video to at least one registered mobile terminal, and/or transmits an alarm message to a police station or a security company.

[0130] As another embodiment, when an abnormal circumstance is sensed by a sensing module, the home device may immediately capture image data and begins to report the image data to the home gateway. To this end, the home device may be configured to enable communication with a sensing module, or to include a sensing module.

[0131] In step **1208**, the mobile terminal executes a predetermined alarm operation in response to the reception of the alarm message. As an embodiment, the mobile terminal dis-

plays, on a screen, a text message, for example, "a movement is sensed in a front door", and may execute an additional alarm operation such as flashing an LED, generating an alarm sound, generating a vibration and the like. As another embodiment, the mobile terminal may automatically execute a remote controlling app for home monitoring in response to the reception of the alarm message. As another embodiment, the mobile terminal displays a shortcut icon for executing a remote controlling app on a screen in response to the reception of the alarm message, and executes the remote controlling app in response to a user input on the shortcut. When the remote controlling app is executed, the remote controlling app connects with the home gateway to execute a login procedure or determines a login procedure performed in advance to permit a connection with the home gateway.

[0132] In step **1214**, the mobile terminal transmits a home monitoring request message to the home gateway through the remote controlling app. The home monitoring request message includes at least one of a login ID and password for a connection with the home gateway, an identifier of the mobile terminal, and authentication information obtained in advance. In step **1216**, after authenticating a connection of the mobile terminal, when the home gateway does not collect image data from a home device located in a place where abnormality is sensed, the home gateway requests a corresponding home device to transmit image data in response to the home monitoring request message, and receives the image data from the home device in step **1218**. When the home gateway collects image data from a home device in real time, step **1216** may be omitted.

[0133] In step **1220**, the home gateway transmits, to the mobile terminal, the image data collected by the corresponding home device, and the mobile terminal displays the image data to enable a user to check the image data. According to an embodiment, the image data may be transmitted to the mobile terminal, together with camera information associated with a corresponding camera module or identification information of a home device equipped with a camera module. The mobile terminal may display the image data together with the camera information and/or the identification information. As another embodiment, when an abnormal circumstance is sensed in step **1204**, the home gateway immediately proceeds with step **1220** so as to begin transmission of image data to the mobile terminal.

[0134] While displaying the image data, the mobile terminal may receive an input of a command for controlling a camera from a user. The control command instructs at least one of adjusting an angle of a camera, zooming in/out, and moving a home device equipped with a camera, and may further include indication information indicating a camera that is desired to be controlled.

[0135] The mobile terminal transmits, to the home gateway, the control command input by the user in step **1222**, and the home gateway transmits the control command to the home device in step **1224**. In step **1226**, the home device adjusts an angle of a camera to an upper/lower/left/right side or executes zooming in/out, execute left/right rotation, or executes forward/backward movement, in response to the control command. The home device executes an operation associated with the control command, and continuously transmits image data to the home gateway in step **1228**, and the home gateway transfers the image data to the mobile terminal in step **1230** so that the mobile terminal displays the image data. The image data may be transmitted to the mobile terminal, together with camera information associated with a corresponding camera module or identification information associated with a corresponding home device.

[0136] FIG. **13** is a message flowchart illustrating a home monitoring procedure according to another embodiment of the present disclosure.

[0137] Referring to FIG. **13**, in step **1306**, a mobile terminal executes a remote controlling app including a home monitoring function in response to a request from a user or according to an execution condition set in advance. In steps **1302** and **1304**, a home gateway collects and stores image data from at least one home device that includes a camera module and is installed in a home network system, in real time or periodically, irrespective of a request for home monitoring from the mobile terminal. Here, a home device #**1** equipped with a mobile camera and a home device #**2** equipped with a stationary camera are illustrated.

[0138] In step **1308**, the mobile terminal transmits a home monitoring request message to the home gateway through the remote controlling app. In step **1310**, the home gateway determines authority of the mobile terminal in response to the home monitoring request message, and when the mobile terminal has an authority level that is capable of receiving image data for home monitoring, transfers, to the mobile terminal, camera information associated with at least one home device that includes a camera module and is located in a house.

[0139] In step **1312**, the mobile terminal identifies the camera information through the remote controlling app, and selects the home device #**2** equipped with a camera of which an image is desired to be checked. In step **1314**, the mobile terminal transmits, to the home gateway, the home monitoring request message including indication information that indicates the selected camera (or the home device #**2**).

[0140] In step **1316**, when the home gateway does not collect image data from the home device #**2**, the home gateway requests the home device #**2** to transmit image data in response to the home monitoring request message, and receives image data from the home device #**2** in step **1318**. When the home gateway collects image data from the home device #**2** in real time, step **1316** may be omitted.

[0141] In step **1320**, the home gateway transmits, to the mobile terminal, image data collected by the home device #**2**, and the mobile terminal displays the image data to enable a user to check the image data. According to an embodiment, the image data may be transmitted to the mobile terminal, together with camera information associated with a corresponding camera module or identification information of the home device #**2**. The mobile terminal may display the image data together with the camera information and/or the identification information.

[0142] While displaying the image data, the mobile terminal receives a request for changing the image data into image data of another camera from the user in step **1322**. As an embodiment, the user inputs, into the mobile terminal, a command for changing from the home device #**2** equipped with a stationary camera into the home device #**1** equipped with a mobile camera. That is, when the user determines that the user has difficulty in fully checking a desired portion from an image captured by the stationary camera of the home device #**2**, the user determines changing a camera so as to capture the desired portion through use of the mobile camera of the home device #**1**. In step **1324**, the mobile terminal transmits, to the home gateway, the home monitoring request

message including indication information that indicates another camera to be used (or the home device #**1**).

[0143] In step **1326**, when the home gateway does not collect image data from the home device #**1**, the home gateway requests the home device #**1** to transmit image data in response to the home monitoring request message, and receives image data from the home device #**2** in step **328**. When the home gateway collects image data from the home device #**1** in real time, step **1326** may be omitted.

[0144] In step **1330**, the home gateway transmits, to the mobile terminal, image data collected by the home device #**1**, and the mobile terminal displays the image data to enable the user to check the image data. According to an embodiment, the image data may be transmitted to the mobile terminal, together with camera information associated with a corresponding camera module or identification information of the home device #**1**. The mobile terminal may display the image data together with the camera information and/or the identification information.

[0145] The mobile terminal transmits, to the home gateway, a control command for controlling a camera, which is input by the user while the mobile terminal displays image data, in step **1332**, and the home gateway transmits the control command to the home device #**1** in step **1334**. In step **1336**, the home device #**1** adjusts an angle of a camera to an upper/lower/left/right side, executes zooming in/out, executes left/right rotation, or executes forward/backward movement, in response to the control command. The home device #**1** executes an operation associated with the control command, and continuously transmits image data to the home gateway in step **1338**, and the home gateway transfers the image data to the mobile terminal in step **1340** so that the mobile terminal displays the image data. The image data may be transmitted to the mobile terminal, together with camera information associated with a corresponding camera module or identification information associated with the home device #**1**.

[0146] FIG. **14** illustrates a User Interface (UI) in a mobile terminal, for executing a remote controlling app according to an embodiment of the present disclosure. As illustrated in the diagram, the mobile terminal provides an application/widget icon **1402** for executing an installed remote controlling app, and executes the remote controlling app when sensing a user gesture **1404**, for example, a touch, on the icon **1402**.

[0147] As another embodiment, the mobile terminal provides an icon for inputting a voice command, and executes a remote controlling app so as to execute a corresponding home monitoring function when a user gesture is sensed on the icon or a voice command, for example, "Show me the living room", "Let me see my living room", or the like, is input.

[0148] FIG. **15** illustrates a configuration of a screen for home monitoring of a remote controlling app according to an embodiment of the present disclosure.

[0149] As illustrated in the diagram, when execution of a home monitoring function is requested by a user, and an authority level of a mobile terminal that is capable of inquiring about image data captured by a camera is approved by a home gateway, the remote controlling app displays thumbnail images **1502** of image data captured by camera modules installed in a home network system in a form of a lattice or a list. Each thumbnail image **1502** may be a thumbnail video captured in real time by a corresponding camera module, a thumbnail still image extracted based on the thumbnail video, or a thumbnail still image periodically collected from a camera module.

[0150] Each thumbnail image **1502** may be displayed, together with a title area including camera information corresponding to a corresponding camera module. The camera information includes at least one of a position (for example, a room/living room/kitchen and the like), a type (for example, a mobile type/stationary type and the like), and a state (for example, an activated/deactivated state/state of being charged/movable state and the like) of a corresponding camera module. For example, a first thumbnail image may be displayed together with a title of "room 1" or "room1, stationary type", and a second thumbnail image may be displayed together with a title of "IP camera 1(living room)" or "IP camera 1(living room), mobile type".

[0151] As an optional embodiment, each thumbnail image **1502** may be displayed together with a symbol indicating that an abnormal circumstance is sensed from a section (rooms, a kitchen, a living room, a front door and the like) where a corresponding camera module is installed. That is, when an alarm message indicating that an abnormal circumstance is sensed in a predetermined position is received from the home gateway, the mobile terminal may display a symbol indicating the abnormal circumstance (sensing a door open, a movement, heat or the like) by flashing the symbol, together with a title of a corresponding thumbnail image of a corresponding section. As another embodiment, a thumbnail image associated with the abnormal circumstance may be displayed together with a flashing outline.

[0152] As an optional embodiment, only image data captured by a few of a plurality of cameras installed in the home network system may be provided from the home gateway to the mobile terminal. Then, the mobile terminal may deactivate a thumbnail image of a camera that is not approved (for example, shading). FIG. **16** illustrates a configuration of a screen for home monitoring of a remote controlling app according to another embodiment of the present disclosure. Although a user interface of a remote controlling app executed in a smart phone is illustrated herein, a user interface of home monitoring according to an embodiment of the present disclosure may also be displayed through various types of electric devices such as a phone, a Tablet PC, a TV, and the like.

[0153] Referring to FIG. **16**, a remote controlling app displays an arrangement plan **1602** of a house where a home network system is installed, when execution of a home monitoring function is requested by a user. The arrangement plan **1602** displays distinguished sections of an entire house, for example, rooms, a living room, a kitchen, a balcony, a front door, and the like, and includes symbols **1604** and **1604*a*** indicating camera modules or home devices equipped with a camera module in positions where camera modules are installed in each section.

[0154] Each symbol **1604** and **1604*a*** may be a small image similar to an actual shape of a corresponding camera module or home device, or may be a small image indicating a type (stationary or mobile type) of a corresponding camera module. Each symbol **1604** and **1604*a*** may be represented in a color image or a black-and-white image so as to indicate whether a corresponding camera module is activated (or whether the camera module is inquirable). When an abnormal circumstance is sensed by a sensing module in a predetermined section or an adjacent sensing module, and a report associated with an abnormal circumstance is received from a home gateway to a mobile terminal, the mobile terminal may

display the abnormal circumstance by flashing or brightly displaying the symbols **1604** or **1604***a* in a corresponding position.

[0155] The remote controlling app may display additional function keys **1608** for controlling a home network system, together with the arrangement plan **1602**. The function keys **1608** may provide functions, for example, controlling a light, monitoring power consumption, monitoring an image, controlling security, and the like. Also, the remote controlling app may further display a state/control area **1606**. The state/control area **1606** may selectively provide a display of a state, a display of a control key and the like for controlling/managing a home network system according to an authority level of the mobile terminal.

[0156] When a desired camera is selected by the user in a screen configuration for home monitoring, the remote controlling app may enlarge and display an image captured by the selected camera. As an example, when a user gesture is sensed on one of the thumbnail images **1502** of the screen of FIG. **15**, or when a user gesture is sensed on one of the camera symbols **1604** and **1604***a* in the screen of FIG. **16**, the remove controlling app determines to enlarge and display an image of a corresponding camera. As an embodiment, when a user gesture is sensed on a thumbnail image of a deactivated camera, the mobile terminal may not execute any operation or may display a message indicating that inquiring about an image is impossible.

[0157] As an optional embodiment, when a user gesture is sensed in a section where a camera does not exist (for example, the section **1604***b* of FIG. **16**), the mobile terminal may transmit, to the home gateway, a message requesting an image of a corresponding section. Then, the home gateway instructs a home device equipped with a mobile camera module to move to a corresponding section and to record an image. The home gateway traces a position of the home device and transmits information associated with the position to the mobile terminal, and the mobile terminal moves a corresponding symbol **1604** along the movement of the home device and displays the same.

[0158] As an optional embodiment, when a touch and drag is sensed on the symbol **1604** corresponding to the home device equipped with a mobile camera module, the mobile terminal transfers a movement command associated with the touch and drag to the home gateway. The home gateway transfers the movement command to the home device, so that the home device moves according to the touch and drag.

[0159] As an optional embodiment, when a voice command, for example, "show me the living room" or "Let me see my living room", is input, in a state in which a voice function is activated, the mobile terminal may execute the remote controlling app, and may display, on a screen, an image of a section corresponding to the voice command in an enlarged size.

[0160] FIG. **17** illustrates a display of image data according to an embodiment of the present disclosure. As illustrated in the diagram, when a touch on a predetermined area or a voice command is input in a remote controlling app, a video **1702** that is being captured by a selected camera is displayed on a screen of a mobile terminal in an enlarged size, together with a title area **1704** including camera information associated with the video **1702**. The camera information includes at least one of a position (for example, a room/living room/kitchen and the like), a type (for example, a mobile type/stationary type and the like), and a state (for example, an activated/deactivated state/state of being charged/movable state and the like) of a corresponding camera module.

[0161] Together with the selected video **1702**, a list area **1706** indicating a list of other camera modules may be further displayed. The list area **1706** includes a title including camera information corresponding to each camera module, and additionally includes a thumbnail image of a corresponding image data.

[0162] FIG. **18** illustrates a display of image data according to another embodiment of the present disclosure. As illustrated in the diagram, a video **1802** captured by a controllable camera is displayed in an enlarged size, together with a title area **1804** including camera information associated with the video **1802**. The camera information includes at least one of a position (for example, a room/living room/kitchen and the like), a type (for example, a mobile type/stationary type and the like), and a state (for example, an activated/deactivated state/state of being charged/movable state and the like) of a corresponding camera module.

[0163] When a camera module corresponding to the video **1802** is a mobile camera, and an authority level of a mobile terminal that is capable of controlling a mobile camera is approved by a home gateway, a movement control area **1806** through which an input of a movement command for a camera module is received may be displayed together with the video **1802**. The movement control area **1806** includes at least one of a forward/backward movement key and a left/right rotation key. In addition, together with the video **1802**, at least one of a zoom control area **1808** and an angle control area **1810** for a corresponding camera module may be further displayed. The zoom control area **1808** includes zooming in/output keys of a camera module, and the angle control area **1810** includes upper/lower/left/right side keys for adjusting an angle of a camera module.

[0164] When the authority level of the mobile terminal that is capable of controlling a camera is not approved by the home gateway, at least one of the control areas **1806**, **1808**, and **1810** may be deactivated (for example, shading). As an embodiment, when the mobile terminal does not have authority for moving a mobile camera, the movement control area **1806** is displayed to be deactivated, and the mobile terminal may not respond to an input on the mobile control area **1806**.

[0165] As an optional embodiment, when a user gesture is sensed in at least one of the control areas **1806**, **1808**, and **1810**, the mobile terminal transmits a corresponding control command to the home gateway, and waits for an execution result (execution being completed or execution being impossible) associated with the control command from the home gateway. In this example, a corresponding control area or all control areas **1806**, **1808**, and **1810** may be deactivated during a predetermined waiting time after transmission of the control command. When the home gateway receives the execution result, the mobile terminal activates a corresponding control area so that a user may input a next control command.

[0166] FIGS. **19***a* and **19***b* are screens illustrating a control of a mobile camera according to an embodiment of the present disclosure. As illustrated in the diagram, a video area **1902** displays a video through a mobile camera, a title area **1904** displays camera information associated with a mobile camera, and the movement control area **1806** includes at least one of a forward/backward key and a left/right rotation key.

[0167] As illustrated in FIG. **19***a*, when a user gesture **1912** is sensed on one of the keys included in the movement control area **1806**, for example, a right rotation key, a control com-

mand corresponding to the user gesture **1912** is transferred to a mobile camera (or a mobile home device equipped with a camera module) from a mobile terminal through a home gateway.

[0168] Referring to FIG. **19***b*, a mobile camera (or a mobile home device equipped with a camera module) captures an image that is rotated to the right side in response to a control command corresponding to the user gesture **1912**, and image data corresponding to the captured image is displayed on the video area **1902** of a mobile terminal through a home gateway.

[0169] Similarly, when a user gesture **1914** is sensed on one of the keys included in the zoom control area **1908**, for example, a zoom-in key, image data that is zoomed in may be displayed in the video area **1902** of the mobile terminal.

[0170] FIG. **20** illustrates an alarm for an abnormal circumstance associated with a home network system in a mobile terminal according to an embodiment of the present disclosure.

[0171] As illustrated in the diagram, the mobile terminal displays a warning message **2002** associated with an alarm message on a screen, when receiving the alarm message associated with an abnormal circumstance from the home gateway. The warning message **2002** may provide positional information associated with a section where an abnormal circumstance occurs, for example, "a suspicious movement is sensed in room 1". In addition, a shortcut key **2004** for executing a remote controlling app may be displayed, together with the warning message **2002**.

[0172] When a user gesture is sensed on the shortcut icon **2004**, the mobile terminal executes a remote controlling app, and the remote controlling app provides a screen configuration for home monitoring, for example, the screen of FIG. **15** or FIG. **16**. In the screen configuration for home monitoring, a thumbnail image or a camera symbol associated with an abnormal circumstance may be displayed to be flashing or in a distinguishing color so as to indicate that an abnormal circumstance occurs. When the remote controlling app is executed by the shortcut icon **2004**, the remote controlling app may automatically execute a designated function, for example, displaying image data associated with a section where an abnormal circumstance occurs, and the like.

[0173] FIG. **21** illustrates a configuration of a screen for home monitoring of a remote controlling app according to another embodiment of the present disclosure.

[0174] As illustrated in the diagram, the remote controlling app displays monitoring items **2102** of image data captured by camera modules installed in a home network system, in a form of a lattice or a list. Each monitoring item **2102** includes at least one of a name of a corresponding camera module, a position (for example, a room/living room/kitchen and the like), a type (for example, a mobile type/stationary type and the like), and a state (for example, an activated/deactivated state/state of being charged/movable state and the like) of the corresponding camera module, in a form of text or a form of a small image **2104**.

[0175] As an optional embodiment, each monitoring item **2106** may be displayed together with a symbol (flashing or the like) indicating that an abnormal circumstance is sensed from a section (a rooms a kitchen, a living room and the like) where a corresponding camera module is installed. As another optional embodiment, a monitoring item **2108** of a camera that fails to obtain an approval for being inquired or that abnormally operates, may be displayed to be deactivated (for example, shading).

[0176] FIG. **22** illustrates a display of an abnormal circumstance associated with a home network system in a mobile terminal according to another embodiment of the present disclosure.

[0177] As illustrated in the diagram, a remote controlling app displays, in an arrangement plan **2202** of a house in which a home network system is installed, distinguished sections of an entire house, such as a room, a living room, a kitchen, a balcony and the like, and displays a section **2204** where an abnormal circumstance occurs to be distinguished so that a user identifies the same. As an example, when a sensing sensor of a window of room 1 senses damage in a window and reports the damage to a home gateway, the home gateway transmits, to a mobile terminal, an alarm message associated with the window of room 1. The remote controlling app of the mobile terminal displays a section **2204** corresponding to room 1 in the arrangement plan **2202** to be flashing or in a distinguishing color, and additionally displays a warning message such as "a suspicious movement is sensed in room 1", in response to the alarm message.

[0178] When a user gesture is sensed in the section **2204** corresponding to room 1, the remote controlling app receives, from the home gateway, image data associated with one of the cameras installed in room 1, and displays the image data on a screen as shown in FIG. **17** or FIG. **18**.

[0179] The home network system configured as described in the above may strengthen monitoring of an area where is vulnerable to security in a house, using a mobile home device such as a robot cleaner or a mobile toy. The mobile home device may be configured to include a camera module, and to execute a sensing function such as a movement sensing and/or sound sensing.

[0180] In a security mode, a mobile home device and stationary sensing modules in a house begin execution of monitoring. When a movement or a sound is sensed through the mobile home device or the stationary sensing module, the home gateway begins collecting image data through cameras (mobile and stationary types) included in a house, and may analyze image data collected by the cameras and sensed data sensed by sensing modules. As an example, the home gateway may determine whether a person exists in a house based on image data, and may determine whether an abnormal circumstance occurs based on whether states of sensing modules and home devices are changed, and the like. When a result of the analysis determines that an abnormal circumstance occurs, the home gateway operates based on a predetermined procedure. That is, the home gateway transmits a text/image to a mobile terminal of a registered user, and reports abnormality to the police or the security company.

[0181] When a security mode is executed, the home gateway instructs a mobile home device to move to at least one target position set in advance so as to execute image monitoring and sensing. To this end, the home gateway receives, in advance, an input of information associated with a place where a sensing module is not installed or a position having a high probability of intrusion, and executes patrol monitoring with respect to positions set by a user when the security mode is executed. When sensing an abnormal circumstance, the mobile home device begins recording image data at a corresponding position. When an abnormal circumstance is sensed

by another sensing module, the mobile home device begins recording image data and moves to a place where the abnormal circumstance occurs.

[0182] The mobile home device receives, from the home gateway, information associated with target positions such as a place where a child or a pet is located, moves to a corresponding target position, executes monitoring, and reports image data (a video or a still image) to the home gateway. The home gateway may transfer the reported image data to a registered mobile terminal of a user.

[0183] The home gateway stores positional information of target objects to be monitored, for example, electrical appliances, in a form of a vector based on an entrance or a center of a corresponding section. The mobile home device may store map data associated with sections in a house or may receive the same from the home gateway, and may move to the target objects based on the vector.

[0184] The home gateway may extract a movement vector for a movement to a desired target object using a distance from an entrance of each section to a wall and an image of a mobile home device. As another embodiment, a mobile home device directly calculates a movement vector and reports the movement vector to the home gateway.

[0185] FIG. **23** illustrates calculation of a movement vector of a mobile home device according to an embodiment of the present disclosure.

[0186] Referring to FIG. **23**, the reference numeral **2310** illustrates a ground plan of one section in a house, for example, a room, and the reference numeral **2320** illustrates an image captured at an entrance **2302** of the section **2310** by a camera of a mobile home device. A target object **2304** to be monitored, for example, a gas valve, may be located on a wall facing the entrance **2302**, and an actual distance from the entrance **2302** to the wall is b.

[0187] As illustrated in the reference numeral **2320**, in an image captured by the mobile home device, a horizontal distance from the entrance **2302** to the target object **2304** is measured to be a' and a height from a floor to the target object **2304** is measured to be c'. The measured values indicate lengths in the captured image and thus, may be converted into an actual distance using a screen magnification per unit distance m. The screen magnification per unit distance m is a value determined based on a camera magnification of a mobile home device.

[0188] The mobile home device or a home gateway may calculate, based on b, a', and c', a movement vector from the entrance **2302** to the target object **2304** as shown in Equation 1.

$$\vec{v}=a\vec{x}+b\vec{y}+c\vec{z}\quad a=a'\div(m/b)\quad \vec{c}=c'\div(m/b) \qquad \text{Equation 1}$$

[0189] As another embodiment, the movement vector may be calculated as shown in Equation 2.

$$\vec{v}=a\vec{x}+b\vec{y}+c\vec{z}\quad a=a'\div f(m,b)\quad \vec{c}=c'\div f(m,b) \qquad \text{Equation 2}$$

[0190] Here, f( ) is a function for calculating a ratio of a distance on a screen to an actual distance, and may be determined based on a type of a camera.

[0191] A movement vector calculated as described above indicates 3D positional information associated with the target object **2304** in the section **2310**.

[0192] When a mobile home device operates in a security mode, or receives an instruction from a user or the home gateway, the mobile home device moves to the target object **2304** based on the movement vector, and captures the target object **2304** by adjusting an angle and a zoom magnification of a camera module. The captured image is transmitted to the home gateway and/or the mobile terminal, so that the user observes the target object **2304** in detail.

[0193] When a user desires to check circumstances in a house, the present disclosure operated as described above provides image data through a mobile terminal so as to promote user's convenience, and controls a mobile camera for a place that is not monitored by a stationary camera so that the user readily views an image of a desired place. Also, when an abnormal movement occurs in the house, a user outside the house may readily recognize the abnormality through the mobile terminal, and checks circumstances in the house through image data and thus, dangerous circumstances that may occur in the house may be prevented.

[0194] Although specific exemplary embodiments have been described in the detailed description of the present disclosure, various modifications may be made without departing from the scope of the present disclosure. Therefore, the scope of the present disclosure should not be defined as being limited to the embodiments, but should be defined by the appended claims and equivalents thereof.

What is claimed is:

1. A home monitoring method by a home gateway included in a home network system, the method comprising:

receiving, from a mobile terminal, a request message for requesting home monitoring;

providing, to the mobile terminal in response to the request message, monitoring information associated with a camera module included in at least one home device registered in advance and/or a position to be monitored;

receiving, from the mobile terminal, selection information indicating a first camera module selected based on the monitoring information;

transmitting, to the mobile terminal, image data captured and collected by the first camera module in response to the reception of the selection information;

receiving, from the mobile terminal, a control command with respect to the first camera module; and

transmitting the control command to a first home device including the first camera module.

2. The method of claim **1**, further comprising:

receiving an abnormal signal indicating that an abnormal circumstance is sensed, from at least one sensing module registered in the home network system;

transmitting, to the mobile terminal, a warning message indicating that an abnormal circumstance occurs in response to the reception of the abnormal signal; and

transmitting, to the mobile terminal, image data captured by a second camera module located in a section where the abnormal circumstance is sensed.

3. The method of claim **1**, wherein the monitoring information includes at least one of identification information of a place to be monitored, a position, a type, and a state of each camera module, a thumbnail still image or a thumbnail video of image data collected by each camera module.

4. The method of claim **1**, wherein the control command includes at least one of an adjusting command for adjusting a direction and a zooming-in/out command for a stationary camera, and a left/right rotation command, a forward/backward movement command, and a zooming in/out command for a mobile camera.

5. The method of claim **2**, further comprising:

receiving, from the mobile terminal, a control command with respect to the second camera module; and

transmitting the control command to a second home device including the second camera module.

6. The method of claim **2**, wherein, when the occurrence of the abnormal signal does not belong to at least one normal scenario registered in advance, the method includes determining transmission of the warning message to the mobile terminal in response to the reception of the abnormal signal.

7. The method of claim **2**, further comprising at least one of:

storing movement commands to enable at least one mobile home device that is included in the home network system and includes a camera module to arrive on at least one position set in advance; and

controlling at least one mobile home device including a camera module to move to a position where the abnormal circumstance is sensed, in response to the reception of the abnormal signal.

8. The method of claim **1**, further comprising:

receiving, from at least one sensing module registered in the home network system, an abnormal signal indicating that an abnormal circumstance is sensed;

commanding at least one camera module included in the home network system to record and report image data, in response to the reception of the abnormal signal;

determining whether the abnormal circumstance occurs by analyzing the image data collected from the at least one camera module and a state of the at least one sensing module included in the home network system; and

transmitting, to the mobile terminal, a warning message indicating that an abnormal circumstance occurs and/or the image data when it is determined that the abnormal circumstance occurs.

9. The method of claim **1**, further comprising at least one of:

storing movement commands to enable at least one mobile home device that is included in the home network system and includes a camera module to arrive on at least one position set in advance;

controlling the at least one mobile device to move to the at least one position set in advance so as to record image data and execute a sensing function when a security mode is executed; and

controlling the at least one mobile device to patrol between a docking position and the at least one position set in advance so as to record image data and execute a sensing function when the security mode is executed.

10. A home monitoring method by a mobile terminal that is registered in a home gateway included in a home network system, the method comprising:

transmitting a request message for requesting home monitoring to the home gateway;

receiving, from the home gateway, monitoring information associated with a camera module included in at least one home device registered in advance and/or a position where sensing is to be performed, in response to the transmission of the request message;

transmitting, to the home gateway, selection information indicating a first camera module selected based on the monitoring information;

receiving, from the home gateway, image data captured and collected by the first camera module, in response to the transmission of the selection information; and

transmitting, to the home gateway, a control command input by a user with respect to the first camera module.

11. The method of claim **10**, further comprising:

receiving, from the home gateway, a warning message indicating that an abnormal circumstance is sensed by at least one sensing module registered in the home network system;

executing an alarm operation to enable a user to recognize that the abnormal circumstance occurs in the home network system, in response to the reception of the warning message; and

receiving, from the home gateway, image data captured by a second camera module located in a section where the abnormal circumstance is sensed, together with the warning message, and displaying the image data on a screen.

12. The method of claim **10**, wherein the monitoring information includes at least one of a position, a type, and a state of each camera module registered in the home network system, a thumbnail still image or a thumbnail video of image data collected by each camera module.

13. The method of claim **12**, further comprising:

displaying thumbnail images of image data collected by a plurality of camera modules registered in the home network system, based on the monitoring information;

displaying a title area including at least one of a position, a type, and a state of each camera module, together with each thumbnail image;

displaying, in an enlarged size, image data of a corresponding third camera module when a user gesture is sensed on one of the thumbnail images or titles;

displaying a title area including at least one of a position, a type, and a state of the third camera module, together with image data provided in the enlarged size; and

displaying at least one of a list area including a thumbnail image of image data collected by at least one different camera module and a title area, and a control area that receives an input of a control command for the third camera module, together with the image data provided in the enlarged size.

14. The method of claim **10**, wherein the control command includes at least one of an adjusting command for adjusting a direction and a zooming-in/out command for a stationary camera, and a left/right rotation command, a forward/backward movement command, and a zooming in/out command for a mobile camera.

15. The method of claim **11**, wherein executing the alarm operation comprises at least one of:

displaying a text message on a screen;

flashing a Light Emitting Diode (LED);

generating a warning sound;

generating a vibration;

automatically executing a remote controlling application for home monitoring; and

displaying a shortcut for executing the remote controlling application.

16. A home gateway apparatus that supports home monitoring in a home network system, the apparatus comprising:

a network interface module that receives a request message for requesting home monitoring from a mobile terminal, provides, to the mobile terminal, monitoring informa-

tion associated with a camera module included in at least one home device registered in advance and/or a position to be monitored, in response to the request message, receives, from the mobile terminal, selection information indicating a first camera module selected based on the monitoring information, transmits, to the mobile terminal, image data captured and collected from the first camera module in response to the reception of the selection information, and receives a control command with respect to the first camera module from the mobile terminal; and

at least one communication module that is configured to enable communication with a camera module included in at least one home device registered in the home network system, and that transmits the control command to a first home device equipped with the first camera module.

17. The apparatus of claim **16**, wherein, when an abnormal signal indicating that an abnormal circumstance is sensed is received from at least one sensing module registered in the home network system through the communication module, the network interface module transmits, to the mobile terminal, a warning message indicating that an abnormal circumstance occurs in response to reception of the abnormal signal, and transmits, to the mobile terminal, image data captured by a second camera module located in a section where the abnormal circumstance is sensed, together with the warning message.

18. The apparatus of claim **16**, further comprising:

a storage unit that stores movement commands to enable at least one mobile home device that is included in the home network system and includes a camera module to arrive on at least one position set in advance; and

a controller that controls at least one mobile home device including a camera module to move to a position where the abnormal circumstance is sensed, in response to the reception of the abnormal signal.

19. The apparatus of claim **16**, further comprising:

a storage unit that stores movement commands to enable at least one mobile home device that is included in the home network system and includes a camera module to arrive on at least one position set in advance; and

a controller that controls the at least one mobile device to move to the at least one position set in advance so as to record image data and to execute a sensing function when a security mode is executed, and that controls the at least one mobile device to patrol between a docking position and the at least one position set in advance so as to record image data and to execute a sensing function when the security mode is executed.

20. A mobile terminal apparatus that executes home monitoring through a home gateway included in a home network system, the mobile terminal apparatus comprising:

a mobile communication module that transmits a request message for requesting home monitoring to the home gateway through wireless and wired networks, receives, from the home gateway, monitoring information associated with a camera module included in at least one home device registered in advance and/or a position to be monitored, in response to the transmission of the request message, transmits, to the home gateway, selection information indicating a first camera module selected based on the monitoring information, receives, from the home gateway, image data captured and collected by the first camera module, in response to the transmission of the selection information, and transmits, to the home gateway, a control command input by a user with respect to the first camera module; and

a display module that displays the image data.

21. The mobile terminal apparatus of claim **20**, further comprising:

a controller that receives, from the home gateway through the mobile communication module, a warning message indicating that an abnormal circumstance is sensed by at least one sensing module registered in the home network, executes an alarm operation to enable a user to recognize that the abnormal circumstance occurs in the home network system, in response to the reception of the warning message, receives, from the home gateway, image data captured by a second camera located in a section where the abnormal circumstance is sensed, together with the warning message, and controls the display module to display the image data.

* * * * *