2009

USP 32 THE UNITED STATES PHARMACOPEIA

NF 27 THE NATIONAL FORMULARY

Volume 1

By authority of the United States Pharmacopeial Convention, meeting at Washington, D.C., March 9–13, 2005. Prepared by the Council of Experts and published by the Board of Trustees

Official from May 1, 2009

The designation on the cover of this publication, "USP NF 2009," is for ease of identification only. The publication contains two separate compendia: *The United States Pharmacopeia*, Thirty-Second Revision, and *The National Formulary*, Twenty-Seventh Edition.

THE UNITED STATES PHARMACOPEIAL CONVENTION
12601 Twinbrook Parkway, Rockville, MD 20852

Dr. Falk Pharma Ex. 1016
IPR Petition - USP 8,771,729

SIX-MONTH IMPLEMENTATION GUIDELINE

The *United States Pharmacopeia–National Formulary* and its *Supplements* become official **six months** after being released to the public. The *USP–NF*, which is released on November 1 of each year, becomes official on May 1 of the following year.

This change was adopted to give users more time to bring their methods and procedures into compliance with new and revised *USP–NF* requirements.

The table below describes the new official dates. The 2008 *USP31–NF26*, and the *Supplements* and *Interim Revision Announcements (IRAs)* to that edition, will be official until May 1, 2009, at which time the *USP32–NF27* becomes official.

Publication	Release Date	Official Date	Official Until
USP32–NF27	Nov. 1, 2008	May 1, 2009	May 1, 2010 (except as superceded by *Supplements, IRAs,* and *Revision Bulletins*)
First Supplement	Feb. 1, 2009	Aug. 1, 2009	May 1, 2010 (except as superceded by *Second Supplement, IRAs,* and *Revision Bulletins*)
Second Supplement	June 1, 2009	Dec. 1, 2009	May 1, 2010 (except as superceded by *IRAs* and *Revision Bulletins*)
USP33–NF28	Nov. 1, 2009	May 1, 2010	May 1, 2011 (except as superceded by *Supplements, IRAs,* and *Revision Bulletins*)

IRAs will continue to become official on the first day of the second month of the *Pharmacopeial Forum (PF)* issue in which they are published as final. For instance, *IRAs* published as final in the May-June *PF* (issue 3) will become official on June 1. This table gives the details of the *IRAs* that will apply to *USP31–NF26* and *USP32–NF27.*

*IRA**	Release Date	Official Date	Revises
Jan. 1, 2009 *IRA, PF* 35(1)	Jan. 1, 2009	Feb. 1, 2009	*USP31–NF26* and its *Supplements*
Mar. 1, 2009 *IRA, PF* 35(2)	Mar. 1, 2009	April 1, 2009	*USP31–NF26* and its *Supplements*
May 1, 2009 *IRA, PF* 35(3)	May 1, 2009	June 1, 2009	*USP32–NF27*
July 1, 2009 *IRA, PF* 35(4)	July 1, 2009	Aug. 1, 2009	*USP32–NF27* and *First Supplement*
Sept. 1, 2009 *IRA, PF* 35(5)	Sept. 1, 2009	Oct. 1, 2009	*USP32–NF27* and *First Supplement*
Nov. 1, 2009 *IRA, PF* 35(6)	Nov. 1, 2009	Dec. 1, 2009	*USP32–NF27* and its *Supplements*
Jan. 1, 2010 *IRA, PF* 36(1)	Jan. 1, 2010	Feb. 1, 2010	*USP32–NF27* and its *Supplements*
Mar. 1, 2010 *IRA, PF* 36(2)	Mar. 1, 2010	April 1, 2010	*USP32–NF27* and its *Supplements*

*NOTE—Beginning January 1, 2007, USP ceased identifying *IRAs* numerically (*First, Second,* etc.) and instead now designates them by the date on which they are published.

Revision Bulletins published on the USP website will continue to become official immediately upon publication, unless the *Revision Bulletin* specifies otherwise.

Revisions that contain a specific official date shall continue to become official upon such specified date, which supercedes the general official date for the publication.

For more information about the change in official dates, please visit the USP website at http://www.usp.org.

NOTICE AND WARNING

Concerning U.S. Patent or Trademark Rights—The inclusion in *The United States Pharmacopeia* or in the *National Formulary* of a monograph on any drug in respect to which patent or trademark rights may exist shall not be deemed, and is not intended as, a grant of, or authority to exercise, any right or privilege protected by such patent or trademark. All such rights and privileges are vested in the patent or trademark owner, and no other person may exercise the same without express permission, authority, or license secured from such patent or trademark owner.

Concerning Use of USP or NF Text—Attention is called to the fact that *USP* and *NF* text is fully copyrighted. Authors and others wishing to use portions of the text should request permission to do so from the Secretary of the USPC Board of Trustees.

Copyright © 2008 The United States Pharmacopeial Convention
12601 Twinbrook Parkway, Rockville, MD 20852

All rights reserved.

ISSN: 0195-7996
ISBN: 1-889788-69-2

Printed in the United States by United Book Press, Baltimore, Maryland

Dr. Falk Pharma Ex. 1016
IPR Petition - USP 8,771,729

substance under examination is used without drying. Use a quantity of powder recommended in the operating manual for the pycnometer. Seal the test cell in the pycnometer, and purge the pycnometer system with the test gas according to the procedure given in the manufacturer's operating instructions. If the sample must be degassed under vacuum, follow the recommendations in the individual monographs and the instructions in the operating manual for the pycnometer.

The measurement sequence above describes the procedure for the gas pycnometer shown in *Figure 1*. If the pycnometer differs in operation or in construction from the one shown in *Figure 1*, follow the operating procedure given in the manual for the pycnometer.

Repeat the measurement sequence for the same powder sample until consecutive measurements of the sample volume, V_s, agree to within 0.2%. Unload the test cell and measure the final powder weight, w. Calculate the pycnometric density, ρ, of the sample according to *Equation 2*.

Change to read:

⟨701⟩ DISINTEGRATION

This general chapter is harmonized with the corresponding texts of the *European Pharmacopoeia* and/or the *Japanese Pharmacopoeia*. The texts of these pharmacopeias are therefore interchangeable, and the methods of the *European Pharmacopoeia* and/or the *Japanese Pharmacopoeia* may be used for demonstration of compliance instead of the present general chapter. These pharmacopeias have undertaken not to make any unilateral change to this harmonized chapter.

Portions of the present general chapter text that are national *USP* text, and therefore not part of the harmonized text, are marked with symbols (♦♦) to specify this fact.

This test is provided to determine whether tablets or capsules disintegrate within the prescribed time when placed in a liquid medium at the experimental conditions presented below. ♦Compliance with the limits on *Disintegration* stated in the individual monographs is required except where the label states that the tablets or capsules are intended for use as troches, or are to be chewed, or are designed as extended-release dosage forms or delayed-release dosage forms. Determine the type of units under test from the labeling and from observation, and apply the appropriate procedure to 6 or more dosage units.♦

For the purposes of this test, disintegration does not imply complete solution of the unit or even of its active constituent. Complete disintegration is defined as that state in which any residue of the unit, except fragments of insoluble coating or capsule shell, remaining on the screen of the test apparatus or adhering to the lower surface of the disk, if used, is a soft mass having no palpably firm core.

APPARATUS

The apparatus consists of a basket-rack assembly, a 1000-mL, low-form beaker, 138 to 160 mm in height and having an inside diameter of 97 to 115 mm for the immersion fluid, a thermostatic arrangement for heating the fluid between 35° and 39°, and a device for raising and lowering the basket in the immersion fluid at a constant frequency rate between 29 and 32 cycles per minute through a distance of not less than 53 mm and not more than 57 mm. The volume of the fluid in the vessel is such that at the highest point of the upward stroke the wire mesh remains at least 15 mm below the surface of the fluid and descends to not less than 25 mm from the bottom of the vessel on the downward stroke. At no time should the top of the basket-rack assembly become submerged. The time required for the upward stroke is equal to the time required for the downward stroke, and the change in stroke direction is a smooth transition, rather than an abrupt reversal of motion. The basket-rack assembly moves vertically along its axis. There is no appreciable horizontal motion or movement of the axis from the vertical.

Basket-Rack Assembly—The basket-rack assembly consists of six open-ended transparent tubes, each 77.5 ± 2.5 mm long and having an inside diameter of 20.7 to 23 mm and a wall 1.0 to 2.8 mm thick; the tubes are held in a vertical position by two plates, each 88 to 92 mm in diameter and 5 to 8.5 mm in thickness, with six holes, each 22 to 26 mm in diameter, equidistant from the center of the plate and equally spaced from one another. Attached to the under surface of the lower plate is a woven stainless steel wire cloth, which has a plain square weave with 1.8- to 2.2-mm apertures and with a wire diameter of 0.57 to 0.66 mm. The parts of the apparatus are assembled and rigidly held by means of three bolts passing through the two plates. A suitable means is provided to suspend the basket-rack assembly from the raising and lowering device using a point on its axis.

The design of the basket-rack assembly may be varied somewhat, provided the specifications for the glass tubes and the screen mesh size are maintained. The basket-rack assembly conforms to the dimensions found in *Figure 1*.

Disks—The use of disks is permitted only where specified or allowed ♦in the monograph. If specified in the individual monograph,♦ each tube is provided with a cylindrical disk 9.5 ± 0.15 mm thick and 20.7 ± 0.15 mm in diameter. The disk is made of a suitable transparent plastic material having a specific gravity of between 1.18 and 1.20. Five parallel 2 ± 0.1-mm holes extend between the ends of the cylinder. One of the holes is centered on the cylindrical axis. The other holes are centered 6 ± 0.2 mm from the axis on imaginary lines perpendicular to the axis and parallel to each other. Four identical trapezoidal-shaped planes are cut into the wall of the cylinder, nearly perpendicular to the ends of the cylinder. The trapezoidal shape is symmetrical; its parallel sides coincide with the ends of the cylinder and are parallel to an imaginary line connecting the centers of two adjacent holes 6 mm from the cylindrical axis. The parallel side of the trapezoid on the bottom of the cylinder has a length of 1.6 ± 0.1 mm, and its bottom edges lie at a depth of •1.5 to 1.8 mm• (RB 1-Aug-2008) from the cylinder's circumference. The parallel side of the trapezoid on the top of the cylinder has a length of 9.4 ± 0.2 mm, and its center lies at a depth of 2.6 ± 0.1 mm from the cylinder's circumference. All surfaces of the disk are smooth. If the use of disks is specified ♦in the individual monograph,♦ add a disk to each tube, and operate the apparatus as directed under *Procedure*. The disks conform to dimensions found in *Figure 1*[1].

PROCEDURE

♦**Uncoated Tablets**—♦Place 1 dosage unit in each of the six tubes of the basket and, if prescribed, add a disk. Operate the apparatus, using ♦water or♦ the specified medium as the immersion fluid, maintained at 37 ± 2°. At the end of the time limit specified ♦in the monograph,♦ lift the basket from the fluid, and observe the tablets: all of the tablets have disintegrated completely. If 1 or 2 tablets fail to disintegrate completely, repeat the test on 12 additional tablets. The requirement is met if not fewer than 16 of the total of 18 tablets tested are disintegrated.

♦**Plain-Coated Tablets**—Apply the test for *Uncoated Tablets*, operating the apparatus for the time specified in the individual monograph.

Delayed-Release (Enteric-Coated) Tablets—Place 1 tablet in each of the six tubes of the basket and, if the tablet has a soluble external sugar coating, immerse the basket in water at room temperature for 5 minutes. Then operate the apparatus using simulated gastric fluid TS maintained at 37 ± 2° as the immersion fluid. After 1 hour of operation in simulated gastric fluid TS, lift the basket from the fluid, and observe the tablets: the tablets show no evidence

[1]The use of automatic detection employing modified disks is permitted where the use of disks is specified or allowed. Such disks must comply with the requirements for density and dimension given in this chapter.

Dr. Falk Pharma Ex. 1016
IPR Petition - USP 8,771,729

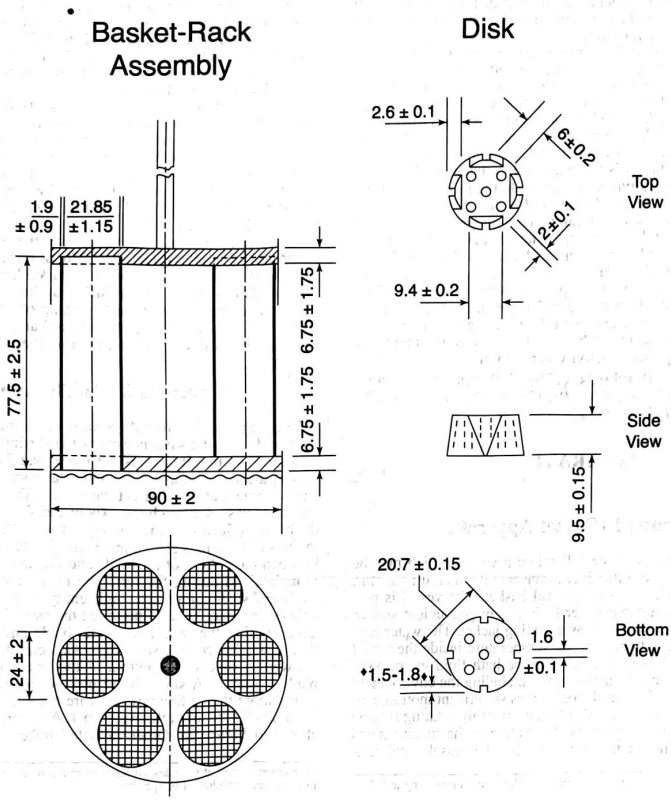

Figure 1. Disintegration apparatus. (All dimensions are expressed in mm.)• (RB 1-Aug-2008)

of disintegration, cracking, or softening. Operate the apparatus, using simulated intestinal fluid TS maintained at 37 ± 2° as the immersion fluid, for the time specified in the monograph. Lift the basket from the fluid, and observe the tablets: all of the tablets disintegrate completely. If 1 or 2 tablets fail to disintegrate completely, repeat the test on 12 additional tablets: not fewer than 16 of the total of 18 tablets tested disintegrate completely.

Buccal Tablets—Apply the test for *Uncoated Tablets*. After 4 hours, lift the basket from the fluid, and observe the tablets: all of the tablets have disintegrated. If 1 or 2 tablets fail to disintegrate completely, repeat the test on 12 additional tablets: not fewer than 16 of the total of 18 tablets tested disintegrate completely.

Sublingual Tablets—Apply the test for *Uncoated Tablets*. At the end of the time limit specified in the individual monograph: all of the tablets have disintegrated. If 1 or 2 tablets fail to disintegrate completely, repeat the test on 12 additional tablets: not fewer than 16 of the total of 18 tablets tested disintegrate completely.

Hard Gelatin Capsules—Apply the test for *Uncoated Tablets*. Attach a removable wire cloth, which has a plain square weave with 1.8- to 2.2-mm mesh apertures and with a wire diameter of 0.60 to 0.655 mm, as described under *Basket-Rack Assembly*, to the surface of the upper plate of the basket-rack assembly. Observe the capsules within the time limit specified in the individual monograph: all of the capsules have disintegrated except for fragments from the capsule shell. If 1 or 2 capsules fail to disintegrate completely, repeat the test on 12 additional capsules: not fewer than 16 of the total of 18 capsules tested disintegrate completely.

Soft Gelatin Capsules—Proceed as directed under *Hard Gelatin Capsules*.♦

⟨711⟩ DISSOLUTION

This general chapter is harmonized with the corresponding texts of the *European Pharmacopoeia* and/or the *Japanese Pharmacopoeia*. These pharmacopeias have undertaken not to make any unilateral change to this harmonized chapter.

Dr. Falk Pharma Ex. 1016
IPR Petition - USP 8,771,729