[19] **China National Intellectual Property Administration**

[12] **Specification for Publication of Invention Patent Application**

[51] Int. Cl.
H01L31/042 (2006.01)
H01L31/072 (2006.01)

[21] Application No. 200610153054.7

[43] Publication Date April 18, 2007 **[11] Publication No.** CN 1949545A

[22] Application Date 2006.9.21

[21] Application No. 200610153054.7

[71] Applicant Beijing Solar Energy Inst. Co., Ltd.

Address No. 3, Huayuan Road, Haidian District, Beijing 100083

[72] Inventors LI Xudong, LI Hailing, XU Ying, SONG Shuang, HENG Yang

1 page of Claims 2 pages of Specification
1 page of Accompanying Drawings

[54] Title

CRYSTALLINE SILICON SOLAR CELL WITH NOVEL STRUCTURE

[57] Abstract

A crystalline silicon solar cell adopting an emitting region on a back surface of thin film silicon belongs to a photovoltaic cell with a novel structure. The crystalline silicon solar cell is characterized in that a layer of silicon thin film is deposited on a back surface of an N-type monocrystalline silicon substrate to form a heterogeneous PN junction so as to replace a homogeneous PN junction prepared on a front surface of the cell by a conventional diffusion method. The silicon thin film deposited in the present invention can be an amorphous thin film, a microcrystalline thin film, or a nanocrystalline thin film. The heterogeneous PN junction in the present invention can be a P-type silicon thin film directly deposited on the N-type monocrystalline silicon, or can also be a P-type silicon thin film deposited on a layer of intrinsic silicon thin film which is first deposited on the N-type monocrystalline silicon. By adopting the cell structure in the present invention, cell efficiency can reach 20% or above.

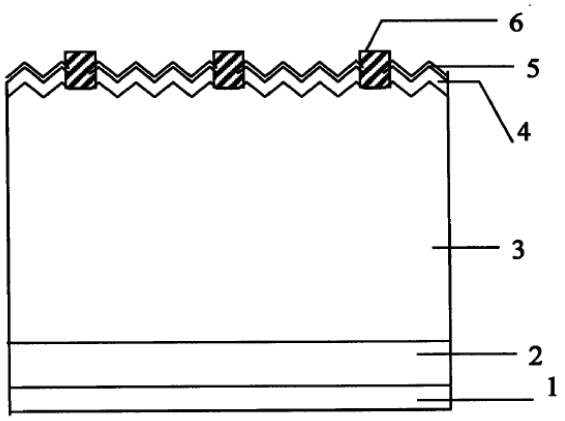

Schematic diagram of a solar cell with a novel structure

1. A heterojunction solar cell, characterized in that an emitting region is on a back surface of the cell, and a heterogeneous PN junction is formed at the same time.
2. The solar cell of claim 1, characterized in that the solar cell is structurally a positive electrode/anti-reflection layer/surface textured N-type crystalline silicon/silicon thin film/back electrode.
3. The solar cell of claim 1, characterized in that the emitting region is on the back surface of the cell.
4. The solar cell of claim 1, characterized by the heterogeneous PN junction.
5. The solar cell of claim 3, characterized in that the heterogeneous PN junction can be structurally an N-type crystalline silicon/P-type silicon thin film, or can also be an N-type crystalline silicon/intrinsic silicon thin film/P-type silicon thin film.
6. The solar cell of claim 4, characterized in that the silicon thin film can be an amorphous silicon thin film, a microcrystalline silicon thin film, or a nanocrystalline silicon thin film.

Crystalline Silicon Solar Cell with Novel Structure

I. Technical Field

The present invention relates to a novel structure of a solar cell and belongs to the field of solar energy applications.

II. Background Art

Crystalline silicon solar cells account for more than 90% of photovoltaic market shares in the global world. Such cells generally adopt P-type crystalline silicon to form an N-type emitting region through high-temperature diffusion and belong to homogeneous PN junction solar cells. However, such cells have the disadvantages that the high-temperature diffusion may cause more defects in silicon materials, and when pollution is caused in a high-temperature process, cell efficiency will be greatly reduced. Thus, higher requirements are put forward for both materials and a production environment. In addition, back surfaces of such cells are free of effective passivation and an effective light trapping structure. Thus, recombination on the back surfaces is relatively serious, and a part of light penetrates an active region of the cells and is not absorbed. These disadvantages are reasons that limit improvement of the efficiency of conventional solar cells.

In recent years, an amorphous silicon/crystalline silicon heterojunction solar cell (HIT cell) has been developed by Sanyo in Japan. Such cell adopts an N-type monocrystalline silicon wafer and deposits an amorphous silicon thin film on a surface of the silicon wafer. An emitting region is a P-type amorphous silicon thin film deposited on a front surface of the silicon wafer. A front surface structure of the cell is a metal grid/transparent conductive thin film (TCO)/P-type amorphous silicon/intrinsic amorphous silicon/monocrystalline silicon wafer. The structure makes full use of a good surface passivation effect of the amorphous silicon, and the efficiency of the prepared cell reaches 20% or above.

Adoption of N-type silicon has the advantages that the N-type silicon wafer generally has a long minority carrier lifetime, and the silicon wafer with high quality is easy to obtain. The N-type silicon is also more tolerant to impurities than the P-type silicon. For solar cells, P-type silicon cells will have efficiency attenuation to a certain degree after long-term exposure to light, and the attenuation is related to boron-oxygen defects in materials. After the N-type silicon is used, the problem no longer exists.

Adoption of the amorphous silicon emitting region has the advantage that the amorphous silicon has a good surface passivation effect. Moreover, a deposition temperature is low (200°C), and a process is relatively simple, such that a high-temperature process is avoided, and the manufacturing cost of the cell is reduced.

However, the HIT cell also has weaknesses. Because the amorphous silicon emitting region is on the front surface, a thickness of the amorphous silicon thin film is limited (generally 20 μm), such that incident light loss is increased when the thickness is increased. However, it is generally believed that the amorphous thin film with the thickness of 50 μm or above can achieve a good surface passivation effect. When the amorphous emitting region is too thin, the situation of complete depletion of carriers in the emitting region may even occur, leading to reduction of the cell efficiency. In addition, because the transparent conductive thin film needs to be used on the front surface of the cell, about 10% of light loss (generally, the transmittance of the transparent conductive thin film is up to 90%) will also be caused.

In view of the problems of the conventional homojunction cells and the HIT cells, the present invention provides a novel cell structure: a crystalline silicon solar cell adopting an emitting region on a back surface of thin film silicon. The solar cell adopts an amorphous silicon (which can also be microcrystalline silicon or nano-silicon) heterojunction emitting region and deposits the emitting region on a back surface of a silicon wafer. The cell first avoids light loss caused by the amorphous silicon layer and the transparent conductive thin film on the front surface, such that the cell efficiency can be improved by 10% or above, compared to the HIT cell. In addition, the thickness of a thin film silicon layer is not limited, which can provide better surface passivation. A thin film silicon/metal structure on a back surface of the cell can also provide a good light trapping effect.

According to the cell with the novel structure, because a PN junction is placed on the back surface of the cell, requirements for the minority carrier lifetime are high, and thus, high-quality crystalline silicon materials need to be used. However, improvement of the cell efficiency and simplification of processes can make up for

adverse influence caused by increase of material costs.

III. Summary of the Invention

The purpose of the present invention is to overcome the disadvantages of existing cell structures so as to obtain a crystalline silicon solar cell having an emitting region on a back surface with high conversion efficiency and a simple manufacturing process.

The present invention is achieved by the following technical solutions. A layer of silicon thin film is deposited on a back surface of N-type monocrystalline silicon to form an emitting region (a P-type silicon thin film can be deposited on a layer of intrinsic silicon thin film which is first deposited on the back surface of the N-type monocrystalline silicon, or a P-type silicon thin film can be directly deposited on the N-type monocrystalline silicon). The silicon thin film can be prepared by any deposition method, and the silicon thin film can be an amorphous silicon thin film, a microcrystalline silicon thin film, or a nanocrystalline silicon thin film. Compared with conventional homojunction P-type crystalline silicon solar cells, the use of the structure not only effectively avoids influence of boron-oxygen defects in P-type cells, but also effectively passivates the back surface. In addition, a metal electrode layer on the back surface can re-reflect light that penetrates the cell back into the cell, thereby increasing an absorption rate of the light by the cell. Compared with foreign amorphous silicon/crystalline silicon heterojunction solar cells (HIT cells), the emitting region of the structure is on the back surface of the cell, and a front surface no longer requires a transparent conductive thin film to collect current, such that efficiency loss caused by absorption of incident solar energy by a silicon thin film and the transparent conductive thin film on the front surface can be avoided. By adopting the cell structure in the present invention, cell efficiency can reach 20% or above.

IV. Brief Description of the Drawings

The accompanying drawing is a structural schematic diagram of such a novel solar cell. In the figures: (1) back electrode; (2) silicon thin film prepared by a deposition method; (3) N-type crystalline silicon; (4) highly doped N^+ layer; (5) anti-reflection layer; (6) positive electrode.

V. Detailed Description of Embodiments

Technical solution: A high-quality N-type monocrystalline silicon wafer (3) with a thickness of less than 300 μm and a resistivity of 5–500 Ωcm is adopted. After surfaces are cleaned and textured by a standard industrial process, a highly doped N^+ layer (4) with a sheet resistance of 100–300 Ω/□ is first diffused on the front surface (the layer is used for passivating the front surface of a cell by using changes in doping concentration and for providing good ohmic contact to a front surface electrode). A thin film (5) having an anti-reflection effect, such as SiN or SiO_2, etc., with a thickness of 70–120 nm, is deposited or grows on the N^+ layer. A silicon thin film (2), such as amorphous silicon, microcrystalline silicon, or nanocrystalline silicon, with a thickness of 20-200 nm, is deposited on the back surface of the N-type monocrystalline silicon wafer (3). Finally, a positive electrode (6) is prepared on the anti-reflection layer (5), and a negative electrode (1) is prepared on the silicon thin film.

A technical means adopted in the present invention is to achieve an emitting region by depositing the silicon thin film on the back surface of the cell. Compared with a P-type silicon wafer diffused N-type emitting region used in most factories at present, the N-type silicon can effectively reduce the generation of boron-oxygen defects under illumination and resulting attenuation of conversion efficiency. In addition, a PN junction is prepared by a low-temperature deposition method, which avoids a conventional diffusion process at 800-1000°C. Such high-temperature process will cause more defects or contamination in a silicon material, which will affect the improvement of cell efficiency. In addition, the silicon thin film deposited on the back surface of the silicon wafer, whether it is amorphous silicon, microcrystalline silicon, or nanocrystalline silicon, can achieve a passivation effect on the back surface, thereby improving the cell efficiency. At least one surface of the front surface or the back surface of the structure can be subjected to texturing treatment to reduce light reflection and improve a light trapping effect, which is conducive to improving the photoelectric conversion efficiency of the cell. An anti-reflection film can be prepared on the texturing surface to further improve the photoelectric conversion efficiency of the cell.

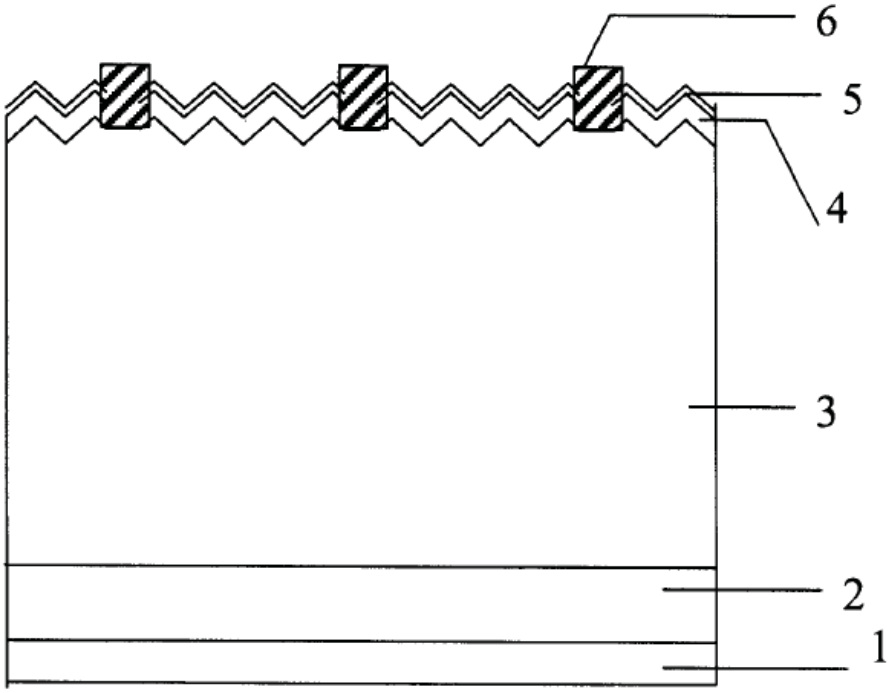

Schematic diagram of a solar cell with a novel structure