(19) Japan Patent Office (JP)

(12) Gazette of Unexamined Patent Applications (A)

(11) Publication Number H07-106611

(43) Publication Date April 21, 1995

(51) Int.Cl.[6]	ID Codes	Int. Ref. Nos.	FI	Theme Codes (Ref.)
H01L 31/04				
		7376-4M	H01L 31/04	A

Examination Request Not Yet Received No. of Claims 5 OL (Total of 10 Pages)

(21) Application No. H05-243040
(22) Filing Date September 29, 1993

(71) Applicant
390022998
Tonen Corporation
1-1-1, Hitotsubashi, Chiyoda-ku, Tokyo

(72) Inventor
Yasunori SAGAWA
Tonen Corporation, Research & Development Center, 1-3-1, Nishitsurugaoka, Oi-machi, Irima-gun, Saitama-ken

(72) Inventor
Yoshinori OKAYASU
Tonen Corporation, Research & Development Center, 1-3-1, Nishitsurugaoka, Oi-machi, Irima-gun, Saitama-ken

(74) Agent
Attorney Kohei KUBOTA (and 1 other)

(54) [Title of the Invention]
BSF-Type Solar Cell Production Method

(57) [Abstract]
[Problem]
To provide a method that enables the stable production of BSF-type solar cells with high photoelectric conversion efficiency.
[Solution]
Provided is a method for producing a BSF-type solar cell comprising an n^- single crystal silicon (Si) substrate 1, a p-type poly-Si layer 2 on the light-entering side of the substrate, and an n^+ poly-Si layer 5 on the opposite side forming an HL junction with the Si substrate, the method characterized by forming the n+ poly-Si layer by thermal CVD using $B_2H_6/SiH_4/SiF_4$ as a feedstock gas. Because the production of suspended particles in the film-forming chamber can be prevented despite the use of halogen atom-emitting SiF_4 and the substrate heating temperature can be reduced despite the use of thermal CVD, this method improves the film quality of the n^+ poly-Si layer and enables the stable production of BSF-type solar cells with high photoelectric conversion efficiency.

1: n^- single crystal silicon substrate
2: p-type polysilicon layer
5: n^+ polysilicon layer

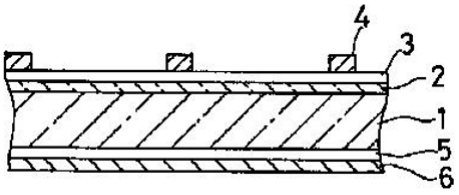

[Claims]

[Claim 1] A method for producing a BSF-type solar cell provided with an n-type or p-type silicon substrate, a p-type or n-type silicon layer provided on the light-entering side of the silicon substrate and forming a p-n junction with the silicon substrate, and an n^+ or p^+ silicon layer provided on the opposite side of the silicon substrate and forming an HL junction with the silicon substrate, the method comprising supplying a film-forming gas containing silicon atoms, SiF_4 gas, and an n-type or p-type dopant gas to a film-forming chamber in which an n-type or p-type silicon substrate has been arranged, and thermally decomposing the supplied gas in the vicinity of the heated silicon substrate while allowing the fluorine radicals generated by the reaction between the radical component of the thermally decomposed film-forming gas and the SiF_4 gas to act as etching components to form an n^+ or p^+ silicon layer on the n-type or p-type silicon substrate surface.

[Claim 2] A method for producing a BSF-type solar cell provided with a n-type or p-type silicon substrate, a p-type or n-type silicon layer provided on the light-entering side of the silicon substrate and forming a p-n junction with the silicon substrate, and an n^+ or p^+ silicon layer provided on the opposite side of the silicon substrate and forming an HL junction with the silicon substrate, the method comprising supplying a film-forming gas consisting primarily of silicon hydride and fluorinated silane gas represented by SiH_mF_{4-m} (where m is 1 to 3) and an n-type or p-type dopant gas to a film-forming chamber in which an n-type or p-type silicon substrate has been arranged, and thermally decomposing the supplied gas in the vicinity of the heated silicon substrate while allowing the fluorinated radicals generated by the thermal decomposition of the fluorinated silane gas and fluorinated radicals generated by the reaction of radical components of the thermally decomposed film-forming gas with the fluorinated silane gas to act as etching components to form an n^+ or p^+ silicon layer on the n-type or p-type silicon substrate surface.

[Claim 3] The method for producing a BSF-type solar cell according to claims 1 or 2, wherein a mesh-like heat-generating member is arranged in the space near the n-type or p-type silicon substrate placed inside the film-forming chamber so that the substrate is covered.

[Claim 4] A method for producing a BSF-type solar cell provided with a n-type or p-type silicon substrate, a p-type or n-type silicon layer provided on the light-entering side of the silicon substrate and forming a p-n junction with the silicon substrate, and an n^+ or p^+ silicon layer provided on the opposite side of the silicon substrate and forming an HL junction with the silicon substrate, the method comprising forming the n^+ or p^+ silicon layer on the heated silicon substrate surface by optical CVD.

[Claim 5] A method for producing a BSF-type solar cell provided with a n-type or p-type silicon substrate, a p-type or n-type silicon layer provided on the light-entering side of the silicon substrate and forming a p-n junction with the silicon substrate, and an n^+ or p^+ silicon layer provided on the opposite side of the silicon substrate and forming an HL junction with the silicon substrate, the method comprising supplying fluorinated silane gas represented by SiH_mF_{4-m} (where m is 1 to 3) or SiF_4 gas to a film-forming chamber in which an n-type or p-type silicon substrate has been arranged, and forming an n^+ or p^+ silicon layer on the heated silicon substrate surface by ion plating in the presence of the fluorinated silane gas or SiF_4 gas.

[Detailed Description of the Invention]

[0001]

[Field of Industrial Applicability] The present invention relates to a method for producing a back surface field (BSF) type solar cell, and in particular, to a method for producing a BSF type solar cell that enables stable production of a BSF type solar cell with high photoelectric conversion efficiency.

[0002]

[Prior Art] As shown, for example, in Fig. 7 and Fig. 8, a BSF type solar cell has, as its main components, a p-type single crystal silicon substrate (a), an n^+ silicon layer (b) provided on the light-entering side of the silicon substrate (a) and forming a p-n junction with the silicon substrate (a), an indium tin oxide (ITO) antireflection layer (c) uniformly formed on the n^+ silicon layer (b), a comb-shaped electrode (d) provided on the antireflection layer (c), a p^+ silicon layer (e) provided on the opposite side of the silicon substrate (a) and forming a high-low (HL) junction with the silicon substrate (a), and a back side electrode (f) uniformly provided on the back side of the p^+ silicon layer (e), and a structure in which electrons and holes generated by incidence light are taken out as electric current from electrodes (d) and (f) is known.

[0003] Fig. 9 is a conceptual diagram used to describe the structure of this BSF type solar cell in modeling terms, and Fig. 10 is an energy band diagram of a BSF type solar cell with this structure.

[0004] Such a BSF type solar cell has the advantage of improving photoelectric conversion efficiency compared to solar cells with a structure not equipped with a p^+ silicon

layer (e) because the built-in electric field between the silicon substrate (a) and the p^+ silicon layer (e) forming the HL junction (g) acts as a barrier to the diffusion of minority carriers (in this case, electrons) to the back electrode f, increasing the apparent diffusion length of electrons, and the series resistance is reduced because the p^+ silicon layer (e) becomes an ohmic electrode with low resistance to holes.

[0005] A p^+ silicon layer (e) that increases the open circuit voltage has been formed in the past by using the "thermal diffusion method". Here, a single-crystal silicon substrate (a) is introduced into a reaction chamber filled with a p-type dopant gas containing, for example, B (boron), the dopant gas is thermally diffused into the silicon substrate a under high-temperature conditions of around 1,000°C, a p-type dopant layer such as aluminum (Al) is laminated on the surface of the single-crystal silicon substrate (a), and firing is conducted under high-temperature conditions of around 1,000°C to form a p^+ silicon layer (e).

[0006] However, there are disadvantages when the p^+ silicon layer (e) is formed using the "thermal diffusion method." The thickness of the p^+ silicon layer (e) is difficult to control and tends to be thicker, ranging from several hundred angstroms to several micrometers, and the diffusion distance of dopant gases such as B, A1, etc. tends to easily change due to slight variations in thermal conditions, making the characteristics of silicon substrate (a) susceptible to variation.

[0007] There are additional disadvantages with the "thermal diffusion method," such as the dopant gas readily becoming trapped and the dopant gas thermally diffusing into the n^+ silicon layer (b) to form a p-n junction with the silicon substrate. The silicon substrate is also disadvantageously exposed to high temperatures of around 1,000°C, which causes thermal decomposition of the substrate.

[0008] Against this technical background, the present applicant has already proposed a production method for BSF solar cells in which an n^+ or p^+ silicon layer forming an HL junction with such an n-type or p-type silicon substrate is formed by plasma CVD. This production method provides advantages in that it has more relaxed thermal conditions during formation of the n^+ or p^+ silicon layer than the conventional thermal diffusion method, making degradation of the characteristics of the silicon substrate less likely, and in that the thickness of the n^+ or p^+ silicon layer can be reduced to several dozen to several hundreds of angstroms, which improves the photoelectric conversion efficiency.

[0009]

[Problem to be Solved by the Invention] This production method using plasma CVD provides these advantages because it allows for lower temperature film formation of n^+ and p^+ silicon layers and can be used to produce thinner n^+ and p^+ silicon layers. However, there is also a disadvantage in that during the film formation process of the n^+ or p^+ silicon layer, a large amount of powdery suspended foreign matter is readily generated in the film formation chamber, and these suspended particles can enter the n^+ or p^+ silicon layer during film formation and degrade the film properties.

[0010] In the plasma CVD method, the plasma-forming feedstock gases are uniformly distributed in the plasma-forming region inside the film-forming chamber, and the plasma-forming feedstock gases are in an excited state. As a result, the feedstock gases react with each other in any space inside the film-forming chamber to produce silicon powder. Silicon is deposited by the reaction of the plasma-forming feedstock gases on the inner walls of the film-forming chamber, that is, somewhere other than on the substrate, and a large amount of powdery suspended foreign matter is readily generated which, for example, delaminate as a powdery substance.

[0011] In the plasma CVD method, halogen gas may be mixed with, for example, SiH_4 gas to serve as a film-forming gas, but the etching action of the halogen atoms easily corrodes the inner walls of the film-forming chamber and the surfaces of the internal tools, causing these corroded surfaces to delaminate and join the floating particles mentioned above.

[0012] Therefore, while the production method using plasma CVD has the advantages described above, it has difficulty forming good quality n^+ or p^+ silicon layers, and as a result, the photoelectric conversion efficiency of the resulting BSF solar cells has certain limitations.

[0013] It is an object of the present invention to address these problems by providing a method that allows for stable production BSF solar cells with improved photoelectric conversion efficiency by selecting thermal CVD, optical CVD, and ion plating, which are able to form high-quality n^+ or p^+ silicon layers under low-temperature film formation conditions.

[0014]

[Means for Solving the Problem] The invention according to claim 1 is premised on a method for producing a BSF-type solar cell provided with a n-type or p-type silicon substrate, a p-type or n-type silicon layer provided on the light-entering side of the silicon substrate and forming a p-n junction with the silicon substrate, and an n^+ or p^+ silicon layer provided on the

opposite side of the silicon substrate and forming an HL junction with the silicon substrate, and is characterized by supplying a film-forming gas containing silicon atoms, SiF_4 gas, and an n-type or p-type dopant gas to a film-forming chamber in which an n-type or p-type silicon substrate has been arranged, and thermally decomposing the supplied gas in the vicinity of the heated silicon substrate while allowing the fluorine radicals generated by the reaction between the radical component of the thermally decomposed film-forming gas and the SiF_4 gas to act as etching components to form an n^+ or p^+ silicon layer on the n-type or p-type silicon substrate surface. The invention according to claim 2 is premised on a method for producing a BSF-type solar cell provided with a n-type or p-type silicon substrate, a p-type or n-type silicon layer provided on the light-entering side of the silicon substrate and forming a p-n junction with the silicon substrate, and an n^+ or p^+ silicon layer provided on the opposite side of the silicon substrate and forming an HL junction with the silicon substrate, and is characterized by supplying a film-forming gas consisting primarily of silicon hydride and fluorinated silane gas represented by SiH_mF_{4-m} (where m is 1 to 3) and an n-type or p-type dopant gas to a film-forming chamber in which an n-type or p-type silicon substrate has been arranged, and thermally decomposing the supplied gas in the vicinity of the heated silicon substrate while allowing the fluorinated radicals generated by the thermal decomposition of the fluorinated silane gas and fluorinated radicals generated by the reaction of radical components of the thermally decomposed film-forming gas with the fluorinated silane gas to act as etching components to form an n^+ or p^+ silicon layer on the n-type or p-type silicon substrate surface.

[0015] Because the invention according to claim 1 uses SiF_4 gas, which is not very susceptible to thermal decomposition, as a halogen atom-releasing gas, and the invention according to claim 2 uses fluorinated silane gas, which has an even higher thermal decomposition temperature, as a halogen atom-releasing gas, thermal decomposition of SiF_4 and fluorinated silane gas is much less likely to occur in the low-temperature distribution regions away from the substrate in the film-forming chamber, and the concentration of fluorinated radicals in these regions is thus low.

[0016] Therefore, compared to the conventional production method using plasma CVD, the film-forming gas is less likely to react with fluorine radicals in other spaces inside the film-forming chamber to generate silicon powder, and corrosion of the inner wall surfaces of the film-forming chamber and internal tool surfaces due to the action of these fluorinated radicals is less likely to occur. As a result, despite using SiF_4 or fluorinated silane gas, which releases halogen atoms, the generation of suspended particles in the film-forming chamber can be prevented.

[0017] In the invention according to claim 1, while the SiF_4 gas is less susceptible to thermal decomposition, thermal decomposition is accelerated by the reaction with radical components of the film-forming gas such as thermally decomposed silane compounds. As a result, regions with a high concentration of these radical components, that is, the regions near the n-type or p-type silicon substrate, are susceptible to decomposition, resulting in a high concentration of unevenly distributed fluorine radicals toward these regions. Also, in the invention according to claim 2, fluorinated silane gases such as SiH_2F_2 are susceptible to thermal decomposition near the n-type or p-type silicon substrate at high temperatures, and decomposition is accelerated by the reaction with radical components (SiH_x radicals, H-based radicals, etc.) of the thermally decomposed film-forming gas, resulting in a high concentration of unevenly distributed fluorine radicals toward the region near the substrate.

[0018] Therefore, because only impurities mixed into the n^+ or p^+ silicon layer on the n-type or p-type silicon substrate or the growing n^+ or p^+ silicon layer are selectively etched away due to the action of the fluorine radicals, the invention according to claim 1 or 2 allows for a reduction in the substrate heating temperature despite use of thermal CVD, which requires high-temperature heat treatment to remove these impurities.

[0019] If the invention according to claims 1 or 2 is provided with a heating means for heating the substrate in the space near the substrate inside the film-forming chamber, the substrate heating temperature can be further reduced because the thermal decomposition of the film-forming gas is accelerated. The invention according to claim 3 is based on this technical rationale.

[0020] The invention according to claim 3 is premised on the method for producing a BSF-type solar cell according to claim 1 or 2, and is characterized by a mesh-like heat-generating member arranged in the space near the n-type or p-type silicon substrate placed inside the film-forming chamber so that the substrate is covered.

[0021] This heat-generating member, which is placed in the space near the n-type or p-type silicon substrate, has a shape that does not interfere with film formation of the n^+ or p^+

silicon layer even if arranged so as to cover the entire substrate surface, and the heat generating member is composed of a material that generates heat to the extent that the film-forming gas, for example, silicon hydride, is thermally decomposed in the region near the substrate. Examples include reticulated thermal filaments made of tungsten, thoriated tungsten, etc.

[0022] In the thermal CVD method according to claims 1 to 3, the vacuum in the chamber is continuously evacuated downstream of the chamber during the film-forming process to maintain a constant vacuum level, and to remove fluorine radicals used in the etching process or excess fluorine radicals from the film-forming chamber in the exhaust.

[0023] In the invention according to claims 1 to 3, the n^+ or p^+ silicon layer forming a HL junction with the n-type or p-type silicon substrate can be amorphous silicon layers, polysilicon layers, or single-crystal silicon layers with introduced n-type or p-type dopant gases. Here, from the standpoint of reducing internal resistance, a single-crystal silicon layer with low resistance is preferable to a polysilicon layer, and a polysilicon layer with low resistance is preferable to an amorphous silicon layer.

[0024] Compounds containing antimony (Sb), arsenic (As), and phosphorus (P) from Group III of the periodic table of elements can be used as n-type dopant gases. Specific examples include SbH_3, $SbCl_3$, AsH_3, As_2H_4, and PH_3. Compounds containing gallium (Ga), boron (B), indium (In), and aluminum (Al) from Group V of the periodic table of elements can be used as p-type dopant gases. Specific examples include B_2H_6, $Ga(CH_3)_3$, $In(CH_3)_3$, and $Al(CH_3)_3$.

[0025] The film-forming gas containing silicon atoms used in the invention according to claims 1 or 3 can be easily thermally decomposed silicon hydrides such as SiH_4, Si_2H_6, and Si_3H_8, or silane halide represented by SiH_mX_{4-m} (where m is 1 to 3, preferably 2 to 3, and X is a Cl or F atom, preferably a F atom). Hydrogen gas may be added to the film-forming gas. Hydrogen radicals act on SiF_4 gas to accelerate its decomposition. When a silane halide gas is used as the film-forming gas, a mixing ratio for the silane halide gas that is too high may cause floating foreign matter described above to be produced in the film-forming chamber. Therefore, when halogenated silane gas represented by SiH_mX_{4-m} is used, the mixing ratio should be set so as to be less than that of SiF_4.

[0026] In the invention according to claim 2 or 3, SiH_4, Si_2H_6, and Si_3H_8, etc. can be used as the silicon hydride constituting the primary component of the film-forming gas. As in the invention according to claim 1 or 3, hydrogen gas may be added to the film-forming gas. This is because hydrogen radicals also react with fluorinated silane gases such as SiH_2F_2 to promote their thermal decomposition.

[0027] Note that an inert gas such as helium, neon, or argon may be added as a dilution gas to the film-forming gas in the invention according to claims 1 to 3.

[0028] In the method for producing a BSF solar cell according to the invention described in claims 1 to 3, the vacuum in the film-forming chamber before the start of film formation is set to a level at which some impurities remain in the chamber (about 10^{-5} Torr) and the temperature of the n-type or p-type silicon substrate placed in the chamber is set to about 500°C to 700°C. Then, either at least the film-forming gas described above, SiF_4 gas, and n-type or p-type dopant gas are supplied, or at least the film-forming gas described above, fluorinated silane gas represented by SiH_mF_{4-m} (where m is 1 to 3) and n-type or p-type dopant gas are supplied to form an n^+ or p^+ silicon layer on a n-type or p-type silicon substrate. At this time, impurities are selectively removed by the etching action of the fluorinated radicals even when the substrate heating temperature is set to low temperature conditions of 500°C to 700°C. In addition, because hardly any floating foreign matter is produced that is likely to become mixed into the n^+ or p^+ silicon layer, there is little possibility of it adversely affecting the film properties of the n^+ or p^+ silicon layer.

[0029] This has the advantage of enabling the stable production of BSF solar cells with improved photoelectric conversion efficiency.

[0030] The invention according to claims 4 to 5 relates to a method for producing a BSF solar cell in which optical CVD or ion plating are used instead of thermal CVD as in the invention according to claims 1 to 3 to form an n^+ or p^+ silicon layer.

[0031] The invention according to claim 4 is premised on a method for producing a BSF-type solar cell provided with an n-type or p-type silicon substrate, a p-type or n-type silicon layer provided on the light-entering side of the silicon substrate and forming a p-n junction with the silicon substrate, and an n^+ or p^+ silicon layer provided on the opposite side of the silicon substrate and forming an HL junction with the silicon substrate, and is characterized by forming the n^+ or p^+ silicon layer on the heated silicon substrate surface by optical CVD.

[0032] As shown in Fig. 5, the optical CD device has, as its main components, a film-forming chamber 11, a UV lamp 31 provided in the film-

forming chamber 11 via a quartz window 30, a substrate holder 13 provided on the opposite side of the UV lamp 31 and incorporating a heater 15, gas supply sources 16, 17 that supply film-forming gases such as SiH_4, a dopant gas if appropriate, and hydrogen gas, etc. to the film-forming chamber 11, and a vacuum pump 18 connected via a pressure regulating valve 19. In this method, an n-type or p-type silicon substrate 14 is placed in the film-forming chamber 11, the silicon substrate 14 is heated to about 500 to 600°C, film-forming gases, dopant gases, etc. are supplied from the gas supply sources 16, 17, UV light irradiation is performed, and an n^+ or p^+ silicon layer is formed on the n-type or p-type silicon substrate 14.

[0033] Because an n^+ or p^+ silicon layer with good film quality can be formed on a p-type silicon substrate 14 under low-temperature film formation conditions, the production method according to the invention described in claim 4 provides the same advantage as the invention according to claims 1 to 3, namely, stable production of BSF solar cells with improved photoelectric conversion efficiency.

[0034] The invention according to claim 5 is premised on a method for producing a BSF-type solar cell provided with an n-type or p-type silicon substrate, a p-type or n-type silicon layer provided on the light-entering side of the silicon substrate and forming a p-n junction with the silicon substrate, and an n^+ or p^+ silicon layer provided on the opposite side of the silicon substrate and forming an HL junction with the silicon substrate, and is characterized by supplying fluorinated silane gas represented by SiH_mF_{4-m} (where m is 1 to 3) or SiF_4 gas to a film-forming chamber in which an n-type or p-type silicon substrate has been arranged, and forming an n^+ or p^+ silicon layer on the heated silicon substrate surface by ion plating in the presence of the fluorinated silane gas or SiF_4 gas.

[0035] As shown in Fig. 6, the ion plating device has, as its main components, a film-forming chamber 11, a resistance heating vaporization source 40 provided in the lower end of the film-forming chamber 11 and containing a Si target mixed with dopants as the film-forming material, an RF coil 41 provided in the upper space of the resistance heating vaporization source 40, a shutter 42 that adjusts the amount supplied from the resistance heating vaporization source 40, and a substrate holder 43 provided in the upper end of the film-forming chamber 11 to heat the silicon substrate 14 to about 600 to 700°C. Here, a high-frequency power supply 44 is connected to the RF coil 41, and a positive high-voltage power supply (not shown) is connected to the substrate holder 43. In this method, an n-type or p-type silicon substrate 14 is placed in the film-forming chamber 11, fluorinated silane gas or SiF_4 gas is supplied to the film-forming chamber 11, the silicon substrate 14 is heated to about 600 to 700°C, dopants and silicon are vaporized from the resistance heating vaporization source 40, and an n^+ or p^+ silicon layer is formed on an n-type or p-type silicon substrate 14.

[0036] In the invention according to claim 5, as in the invention according to claims 1 to 3, because fluorinated silane gas or SiF_4 gas, which is less likely to experience thermal decomposition, is used as a halogen atom-releasing gas, a high concentration of fluorine radicals is unevenly distributed toward the region near the n-type or p-type silicon substrate. In other words, because the radical component of thermally decomposed silicon molecules is unevenly distributed toward the region near the n-type or p-type silicon substrate, the reaction of the radical components with the fluorinated silane gas or SiF_4 gas results in a high concentration of unevenly distributed fluorinated radicals. Also, because the fluorine radicals selectively etch and remove only impurities in the n^+ or p^+ silicon layer on the n-type or p-type silicon substrate or in the growing n^+ or p^+ silicon layer, an n^+ or p^+ silicon layer with good film quality can be formed on an n-type or p-type silicon substrate under low-temperature film formation conditions and, as in the invention according to claims 1 to 4, this provides the advantage of stable production of BSF solar cells with improved photoelectric conversion efficiency.

[0037]

[Operation] In the invention according to claim 1, SiF_4 gas, which is resistant to thermal decomposition, is used as a halogen atom-releasing gas, and the concentration of fluorine radicals in the film-forming chamber is low with respect to the portion of this gas that is less likely to experience thermal decomposition. As a result, the film-forming gas reacting with fluorine radicals to form silicon powder in any space inside the film-forming chamber and the inner wall surfaces of the chamber or internal tool surfaces becoming corroded by fluorine radicals is much less likely to occur compared to the conventional production methods using plasma CVD, and the production of suspended particles in the film-forming room can be reliably prevented despite using halogen atom-releasing SiF_4 gas.

[0038] However, because thermal decomposition of SiF_4 gas is accelerated by the reaction with radical components (SiH_x radicals,

H radicals, etc.) in the film-forming gas, a high concentration of fluorine radicals is more likely to be unevenly distributed toward the vicinity of the n-type or p-type silicon substrate, where the radical components are high, and because only impurities in the n^+ or p^+ silicon layer on the substrate or in the growing n^+ or p^+ silicon layer are selectively etched and removed by the action of the fluorine radicals, the substrate heating temperature can be reduced despite use of thermal CVD, which requires high-temperature heat treatment to remove these impurities.

[0039] In the invention according to claim 2, fluorinated silane gas, which has a higher thermal decomposition temperature than the film-forming gas above, is used as a halogen atom-releasing gas, thermal decomposition of the fluorinated silane gas is less likely to occur and the concentration of fluorinated radicals is lower in the regions with a low-temperature distribution away from the substrate in the film-forming chamber compared to the film-forming gas above. As a result, film-forming gas reacting with fluorine radicals to form silicon powder in any space in the film-forming chamber or the inner wall surfaces of the chamber or internal tool surfaces becoming corroded by the fluorine radicals is less likely to occur compared to the conventional production method using plasma CVD. The production of suspended particles can also be prevented in the film-forming chamber despite using a halogen atom-releasing fluorinated silane gas.

[0040] However, because thermal decomposition of the fluorinated silane gas is accelerated by the reaction with radical components (SiH_x radicals, H radicals, etc.) in the film-forming gas in the high-temperature region near the n-type or p-type silicon substrate, a high concentration of fluorine radicals is more likely to be unevenly distributed toward the vicinity of the n-type or p-type silicon substrate, where the radical components are high, and only impurities on the substrate or in the growing n^+ or p^+ silicon layer are selectively removed by the action of this fluorine radical through etching. Therefore, as in the invention according to claim 1, the substrate heating temperature can be reduced despite use of thermal CVD.

[0041] In the invention according to claim 3, because a mesh-like heat-generating member is placed in the space near the n-type or p-type silicon substrate arranged inside the film-forming chamber so that the substrate is covered, the thermal energy emitted by the heat-generating member significantly accelerates the thermal decomposition of the film-forming gas in the region near the substrate above. As a result, the substrate heating temperature can be reduced further due to the synergy with the etching action of the fluorinated radicals.

[0042] In the invention according to claim 4, because an n^+ or p^+ silicon layer is formed on the heated silicon substrate surface by optical CVD, an n^+ or p^+ silicon layer with good film quality can be formed on the n-type or p-type silicon substrate under low-temperature film formation conditions.

[0043] In the invention according to claim 5, because an n^+ or p^+ silicon layer is formed on the heated silicon substrate surface by ion plating under the conditions in which fluorinated silane gas or SiF_4 gas is present, an n^+ or p^+ silicon layer with good film quality can be formed on the n-type or p-type silicon substrate under low-temperature film formation conditions.

[0044]

[Examples] The present invention will now be described in greater detail with reference to examples. In these examples, as in the prior art and as shown in Fig. 1, the BSF type solar cell in these examples has, as its main components, an n^- single crystal silicon substrate (100 orientation, specific resistance 1 to 10 Ω·cm) 1, a p-type amorphous silicon or polysilicon layer 2 on the light-entering side of the silicon substrate 1 and forming a p-n junction with the silicon substrate 1, an antireflection layer 3 made of indium tin oxide (ITO) uniformly deposited on the p-type amorphous silicon or polysilicon layer 2, a comb-shaped electrode 4 formed with silver paste on the antireflection layer 3, an n^+ amorphous silicon or polysilicon layer 5 provided on the opposite side of the silicon substrate 1 and forming an HL junction with the silicon substrate 1, and a backside electrode 6 uniformly provided on the back side of the n^+ amorphous silicon or polysilicon layer 5 and formed of aluminum.

[0045] This BSF solar cell is produced using the following process.

[0046] [Example 1] Fig. 3 is a diagram used to explain the thermal CVD device used in this example. In this figure, 11 is a film-forming chamber, 13 is a substrate holder containing a heater 15, 14 is an n^- single crystal silicon substrate attached to the substrate holders 13, 16, and 17 are feedstock gas sources, and 18 is a vacuum pump connected to the film-forming chamber 11 via a pressure regulating valve 19.

[0047] First, the film-forming chamber 11 was evacuated to a vacuum of 1×10^{-5} Torr. Then, the feedstock gas was introduced to the film-forming chamber 11, and a p-type polysilicon

layer 2 was formed on one side and an n^+ polysilicon layer 5 was formed on the other side under the following film-forming conditions (see Fig. 2A).

[0048] (Film formation conditions for p-type polysilicon layer 2)

Composition of feedstock gas: $B_2H_6/SiH_4/SiF_4$ = 0.1/10/500

Feed rate of feedstock gas: 5 sccm to 100 sccm

Pressure of feedstock gas: 50 mtorr to 1 torr

Heating temperature of n^- single crystal silicon substrate: 700°C

(Film formation conditions for n^+ polysilicon layer 5)

Composition of feedstock gas: $PH_3/SiH_4/SiF_4$ = 0.1/10/330

Feed rate of feedstock gas: 5 sccm to 100 sccm

Pressure of feedstock gas: 50 mtorr to 1 torr

Heating temperature of n^- single crystal silicon substrate: 700°C

Next, as shown in Fig. 2 (B), an antireflection layer 3 was formed by depositing ITO on the p-type polysilicon layer 2 using the sputtering method, and a comb-shaped electrode 4 was formed on this surface using silver paste. The backside electrode 6 was formed by uniformly applying an aluminum film on the back side of the n^+ polysilicon layer 5 using the sputtering method to obtain the BSF solar cell in this example (see Fig. 1).

[0049] When the characteristics of this cell were examined, the characteristics of a cell obtained by applying the conventional plasma CVD method to n^+ polysilicon layer film formation were 0.57 V to 0.58 V and 35 mA to 37 mA, while the characteristics of the BSF solar cell in this example were 0.59 V to 0.60 V and 37 mA to 39 mA.

[0050] [Example 2] A cell was obtained in the same manner as in Example 1, except that a p-type amorphous silicon layer and an n^+ amorphous silicon layer were used instead of a p-type polysilicon layer 2 and an n^+ polysilicon layer 5, and the film formation conditions were as follows.

[0051] The characteristics of the BSF solar cell in this example were 0.59 V to 0.60 V and 37 mA to 39 mA, which are better than the example of the prior art mentioned above.

[0052] (Film formation conditions for p-type amorphous silicon layer 2)

Composition of feedstock gas: $B_2H_6/SiH_4/SiF_4/H_2$ = 0.1/10/100/400

Feed rate of feedstock gas: 5 sccm to 100 sccm

Pressure of feedstock gas: 50 mtorr to 1 torr

Heating temperature of n^- single crystal silicon substrate: 600°C

(Film formation conditions for n^+ amorphous silicon layer 5)

Composition of feedstock gas: $PH_3/SiH_4/SiF_4/H_2$ = 0.1/10/100/400

Feed rate of feedstock gas: 5 sccm to 100 sccm

Pressure of feedstock gas: 50 mtorr to 1 torr

Heating temperature of n^- single crystal silicon substrate: 600°C

[Example 3] A cell was obtained in the same manner as in Example 2, except that the film formation conditions for the p-type amorphous silicon layer 2 and the n^+ amorphous silicon layer 5 were as follows.

[0053] The characteristics of the BSF solar cell in this example were 0.58 V to 0.59 V and 36 mA to 38 mA, which are better than the example of the prior art mentioned above.

[0054] (Film formation conditions for p-type amorphous silicon layer 2)

Composition of feedstock gas: $In(CH_3)_3/SiH_4/SiH_2F_2/Ar$ = 0.1/10/100/400

Feed rate of feedstock gas: 5 sccm to 100 sccm

Pressure of feedstock gas: 50 mtorr to 1 torr

Heating temperature of n^- single crystal silicon substrate: 650°C

(Film formation conditions for n^+ amorphous silicon layer 5)

Composition of feedstock gas: $SbCl_3/SiH_4/SiH_2F_2/Ar$ = 0.1/10/100/400

Feed rate of feedstock gas: 5 sccm to 100 sccm

Pressure of feedstock gas: 50 mtorr to 1 torr

Heating temperature of n^- single crystal silicon substrate: 650°C

[Example 4] A cell was obtained in the same manner as in Example 2, except that the film formation conditions for the p-type amorphous silicon layer 2 and the n^+ amorphous silicon layer 5 were as follows.

[0055] The characteristics of the BSF solar cell in this example were 0.58 V to 0.59 V and 36 mA to 38 mA, which are better than the example of the prior art mentioned above.

[0056] (Film formation conditions for p-type amorphous silicon layer 2)

Composition of feedstock gas: $Al(CH_3)_3/SiH_4/SiH_2F_2/H_2/Ar$ = 0.1/10/100/300/100

Feed rate of feedstock gas: 5 sccm to 100 sccm

Pressure of feedstock gas: 50 mtorr to 1 torr

Heating temperature of n^- single crystal silicon substrate: 700°C

(Film formation conditions for n^+ amorphous silicon layer 5)

Composition of feedstock gas: $PH_3/SiH_4/SiH_2F_2/H_2/Ar$ = 0.1/10/100/300/100

Feed rate of feedstock gas: 5 sccm to 100 sccm

Pressure of feedstock gas: 50 mtorr to 1 torr

Heating temperature of n^- single crystal silicon substrate: 700°C

[Example 5] A cell was obtained in the same manner as in Example 1, except that a thermal

CVD device with tungsten thermal filaments 20 placed in the space near the substrate as shown in Fig. 4 was used instead of the device shown in Fig. 3, and the film-forming conditions for the p-type polysilicon layer 2 and the n^+ polysilicon layer 5 were as follows.

[0057] The characteristics of the BSF solar cell in this example were 0.59 V to 0.60 V and 37 mA to 39 mA, which are better than the example of the prior art mentioned above.

[0058] (Film formation conditions for p-type polysilicon layer 2)

Composition of feedstock gas: $Ga(CH_3)_3/SiH_4/SiF_4/H_2$ = 0.1/10/100/400

Feed rate of feedstock gas: 5 sccm to 100 sccm

Pressure of feedstock gas: 50 mtorr to 1 torr

Heating temperature of n^- single crystal silicon substrate: 650°C

(Film formation conditions for n^+ polysilicon layer 5)

Composition of feedstock gas: $AsH_3/SiH_4/SiF_4/H_2$ = 0.1/10/100/400

Feed rate of feedstock gas: 5 sccm to 100 sccm

Pressure of feedstock gas: 50 mtorr to 1 torr

Heating temperature of n^- single crystal silicon substrate: 650°C

[Example 6] A cell was obtained in the same manner as in Example 1, except that the thermal CVD device shown in Fig. 4 was used and the film-forming conditions for the p-type polysilicon layer 2 and the n^+ polysilicon layer 5 were as follows.

[0059] The characteristics of the BSF solar cell in this example were 0.58 V to 0.59 V and 36 mA to 38 mA, which are better than the example of the prior art mentioned above.

[0060] (Film formation conditions for p-type polysilicon layer 2)

Composition of feedstock gas: $B_2H_6/SiH_4/SiH_2F_2/H_2/Ar$ = 0.1/10/100/400/100

Feed rate of feedstock gas: 5 sccm to 100 sccm

Pressure of feedstock gas: 50 mtorr to 1 torr

Heating temperature of n^- single crystal silicon substrate: 650°C

(Film formation conditions for n^+ polysilicon layer 5)

Composition of feedstock gas: $PH_3/SiH_4/SiH_2F_2/H_2/Ar$ = 0.1/10/100/400/100

Feed rate of feedstock gas: 5 sccm to 100 sccm

Pressure of feedstock gas: 50 mtorr to 1 torr

Heating temperature of n^- single crystal silicon substrate: 650°C

[Example 7] A cell was obtained in the same manner as in Example 2, except that the optical CVD device shown in Fig. 5 was used and the film formation conditions for the p-type amorphous silicon layer 2 and the n^+ amorphous silicon layer 5 were as follows.

[0061] The characteristics of the BSF solar cell in this example were 0.59 V to 0.60 V and 37 mA to 39 mA, which are better than the example of the prior art mentioned above.

[0062] (Film formation conditions for p-type amorphous silicon layer 2)

Pressure inside film-forming chamber: 1 to 10m Torr

Composition of feedstock gas: $B_2H_6/SiH_4/H_2$ = 0.1/10/300

Feed rate of feedstock gas: 5 sccm to 100 sccm

Pressure of feedstock gas: 50 mtorr to 1 torr

UV light source: Hg lamp

Heating temperature of n^- single crystal silicon substrate: 600°C

(Film formation conditions for n^+ amorphous silicon layer 5)

Pressure inside film-forming chamber: 1 to 10m Torr

Composition of feedstock gas: $PH_3/SiH_4/H_2$ = 0.1/10/300

Feed rate of feedstock gas: 5 sccm to 100 sccm

Pressure of feedstock gas: 50 mtorr to 1 torr

UV light source: Hg lamp

Heating temperature of n^- single crystal silicon substrate: 600°C

[Example 8] A cell was obtained in the same manner as in Example 1, except that the ion plating device shown in Fig. 6 was used, SiF_4 gas was supplied to the ion plating device, and the film-forming conditions for the p-type polysilicon layer 2 and the n^+ polysilicon layer 5 were as follows.

[0063] The characteristics of the BSF solar cell in this example were 0.58 V to 0.59 V and 36 mA to 38 mA, which are better than the example of the prior art mentioned above.

[0064] (Film formation conditions for p-type polysilicon layer 2)

Pressure inside film-forming chamber: 1 to 10m Torr

Target: B_2H_6-doped Si

Power input to RF coil: 50 to 200 W

Heating temperature of n^- single crystal silicon substrate: 700°C

(Film formation conditions for n^+ polysilicon layer 5)

Pressure inside film-forming chamber: 1 to 10m Torr

Target: PH_3-doped Si

Power input to RF coil: 50 to 200 W

Heating temperature of n^- single crystal silicon substrate: 700°C

[0065]

[Effects of the Invention] In the invention according to claims 1 and 2, the production of suspended particles in the film-forming chamber can be prevented despite the use of halogen atom-emitting SiF_4 gas or fluorinated

silane gas and the substrate heating temperature can be reduced despite the use of thermal CVD.

[0066] In the invention according to claim 3, thermal decomposition of the film-forming gas is accelerated significantly by the action of a heat-generating member installed inside the space near the n-type or p-type silicon substrate placed in the film-forming chamber. As a result, there is synergy with the etching action of fluorinated radicals and the substrate heating temperature can be further reduced.

[0067] Therefore, n^+ or p^+ silicon layers with good film quality can be formed on an n-type or p-type silicon substrate under low-temperature film formation conditions, which enables stable production of BSF solar cells with high photoelectric conversion efficiency.

[0068] In the invention according to claim 4, this n^+ or p^+ silicon layer is formed on a heated silicon substrate surface by optical CVD, and in the invention according to claim 5, this n^+ or p^+ silicon layer is formed on a heated silicon substrate surface by ion plating in the presence of fluorinated silane gas or SiF_4 gas. As a result, as in the invention according to claims 1 to 3, n^+ or p^+ silicon layers with good film quality can be formed on an n-type or p-type silicon substrate under low-temperature film formation conditions, which enables stable production of BSF solar cells with high photoelectric conversion efficiency.

[Brief Description of the Drawings]

[Fig. 1] Fig. 1 is a cross-sectional view of the BSF solar cell in the examples.

[Fig. 2] Fig. 2 (A) and (B) show the BSF-type solar cell production process.

[Fig. 3] Fig. 3 is a diagram used to explain the thermal CVD device used in Example 1.

[Fig. 4] Fig. 4 is a diagram used to explain the thermal CVD device used in Example 5.

[Fig. 5] Fig. 5 is a diagram used to explain the optical CVD device used in Example 7.

[Fig. 6] Fig. 6 is a diagram used to explain the ion plating device used in Example 8.

[Fig. 7] Fig. 7 is a perspective view of a conventional solar cell.

[Fig. 8] Fig. 8 is a cross-sectional view of a conventional solar cell.

[Fig. 9] Fig. 9 is a conceptual diagram used to describe the structure of a conventional solar cell in modeling terms.

[Fig. 10] Fig. 10 is an energy band diagram of a conventional solar cell.

[Explanation of Reference Numbers]

1: n^- single crystal silicon substrate

2: p-type polysilicon layer

5: n^+ polysilicon layer

[Fig. 1]

1: n^- single crystal silicon substrate
2: p-type polysilicon layer
5: n^+ polysilicon layer

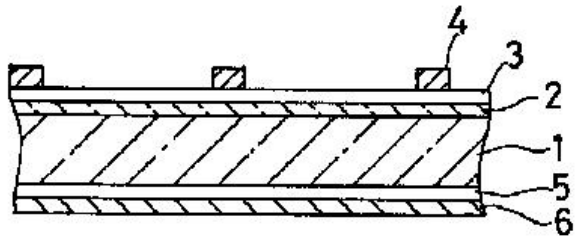

[Fig. 2]

(A)

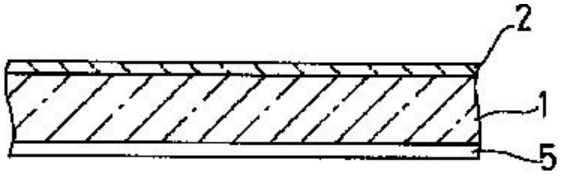

(B)

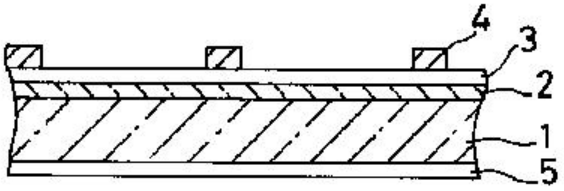

[Fig. 3]

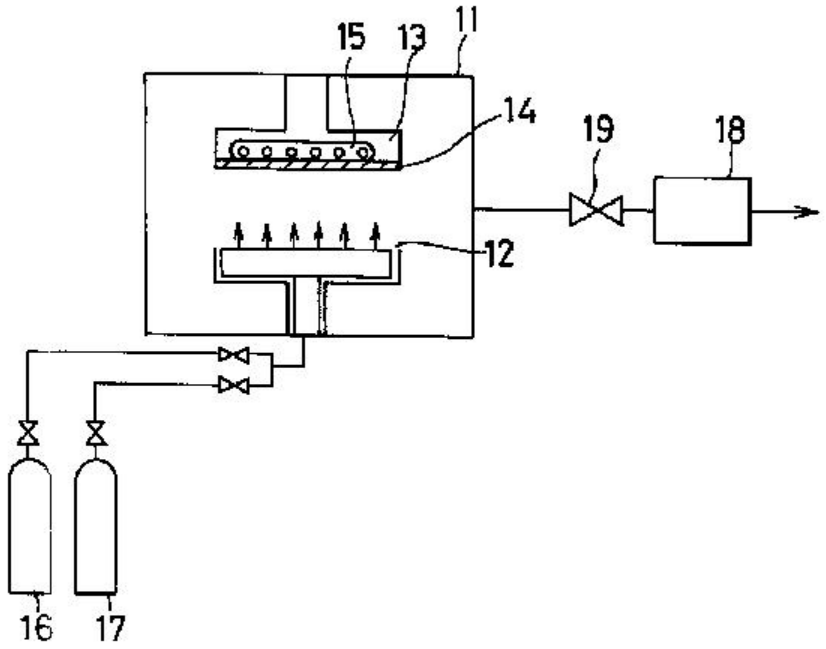

[Fig. 4]

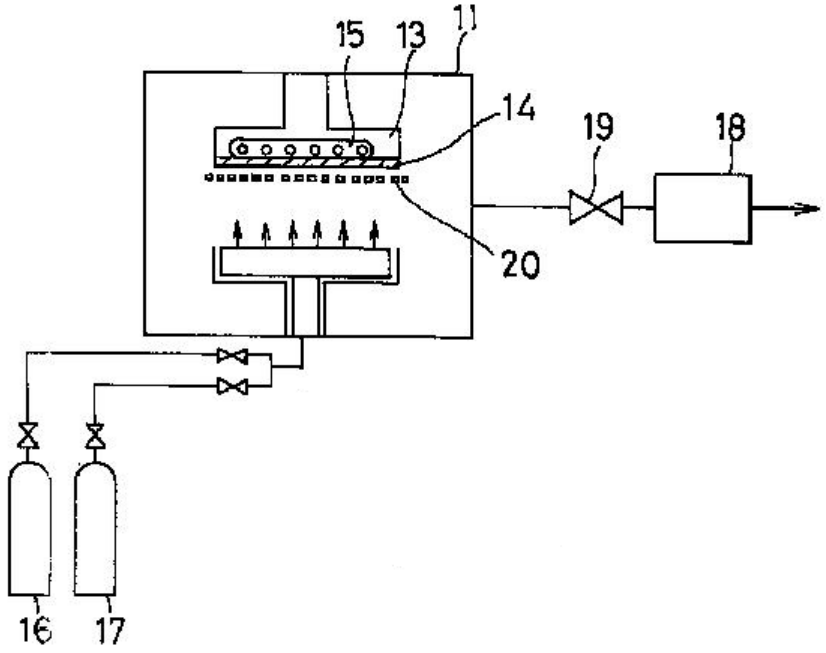

[Fig. 5]

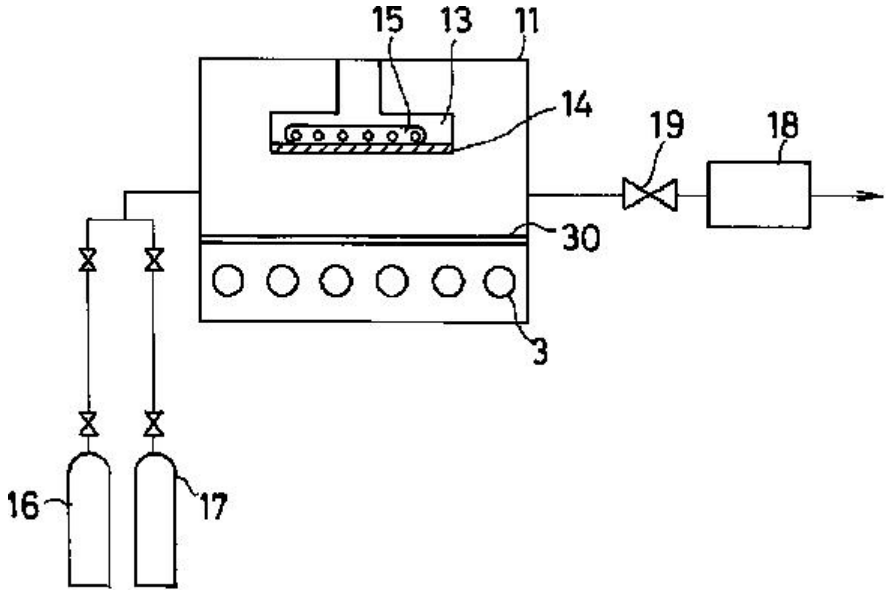

[Fig. 6]

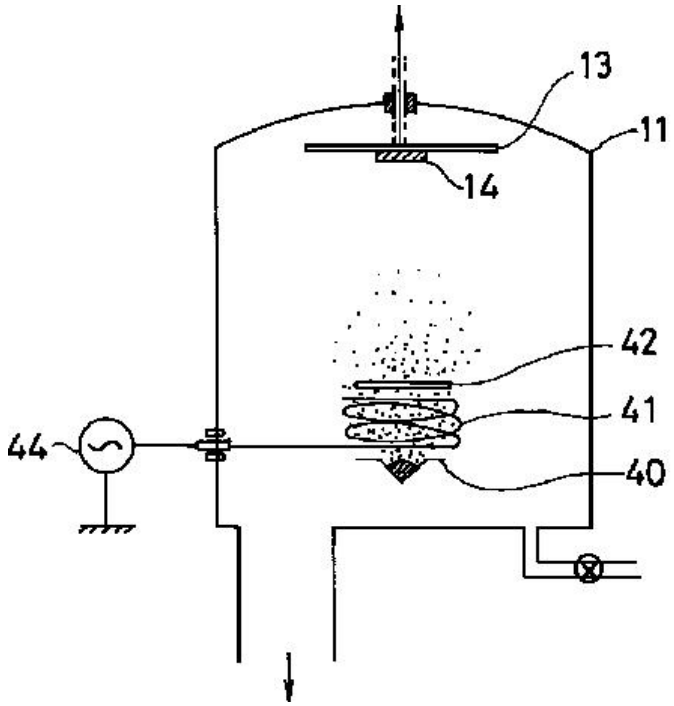

[Fig. 7]

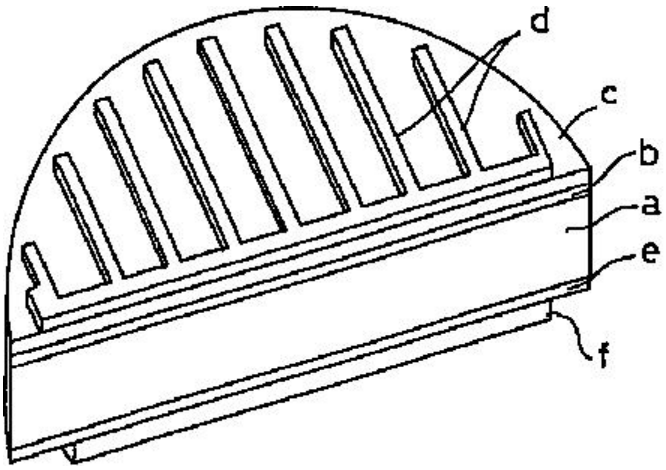

[Fig. 8]

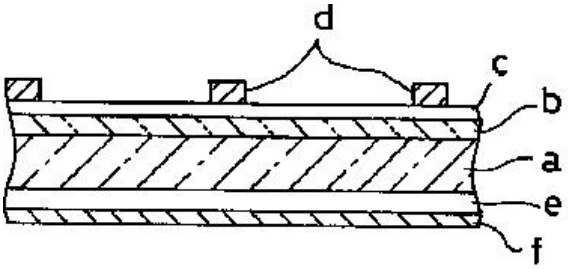

[Fig. 9]

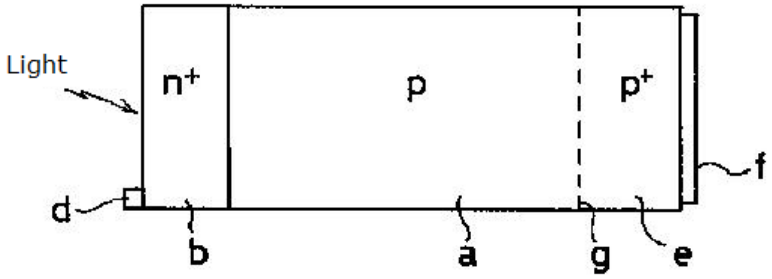
Light
n+
p
p+
f
d
b
a
g
e

[Fig. 10]

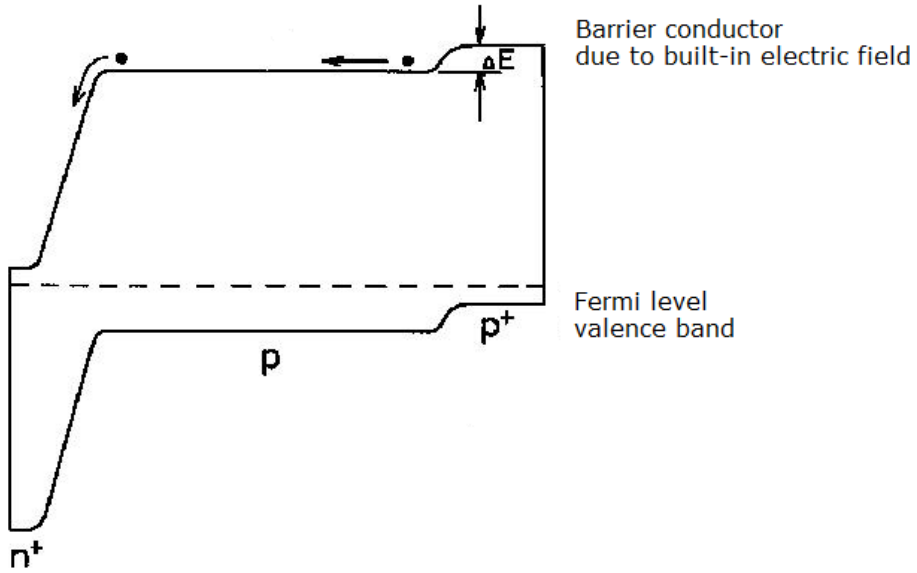
Barrier conductor
due to built-in electric field
ΔE
Fermi level
valence band
p+
p
n+