US 20070016183A1

(19) United States

(12) Patent Application Publication

(10) Pub. No.: US 2007/0016183 A1

(43) Pub. Date: Jan. 18, 2007

Lee et al.

(54) RADIO FREQUENCY ABLATION DEVICE FOR THE DESTRUCTION OF TISSUE MASSES

(76) Inventors: **Bruce Lee**, Monterey, CA (US); **Gordon E. Epstein**, Fremont, CA (US); **Adam Hagmann**, Brentwood, CA (US); **Jeffrey Cohen**, Pleasanton, CA (US)

Correspondence Address:
ROGER PITT
KIRKPATRICK & LOCKHART NICHOLSON GRAHAM LLP
599 LEXINGTON AVENUE
33RD FLOOR
NEW YORK, NY 10022-6030 (US)

(21) Appl. No.: **11/173,928**

(22) Filed: **Jul. 1, 2005**

Publication Classification

(51) **Int. Cl.**
A61B 18/04 (2006.01)

(52) **U.S. Cl.** **606/34**; 606/41

(57) **ABSTRACT**

The inventive ablation element comprises an elongated cannula having a proximal end and a distal end. The cannula defines an internal lumen within the cannula and a cannula axis. A plurality of conductors contained within the lumen, each of the conductors has a proximal end proximate the proximal end of the cannula, and a distal end proximate the distal end of the cannula. A plurality of ablation stylets each has a proximal end and a distal end, and each coupled at the respective proximal end of the stylet to the distal end of a respective conductor, the stylets comprise a deflectable material, the conductors together with their respective stylets being mounted for axial movement. A trocar point defined proximate the distal end of the cannula. A deflection surface positioned between the trocar point and the proximal end of the cannula, the deflection surface being configured and positioned to deflect, in response to axial movement of the stylets in a direction from the proximate end of the cannula to the distal end of the cannula, at least some of the stylets laterally with respect to the cannula axis in different directions along substantially straight paths, the paths defining an ablation volume.

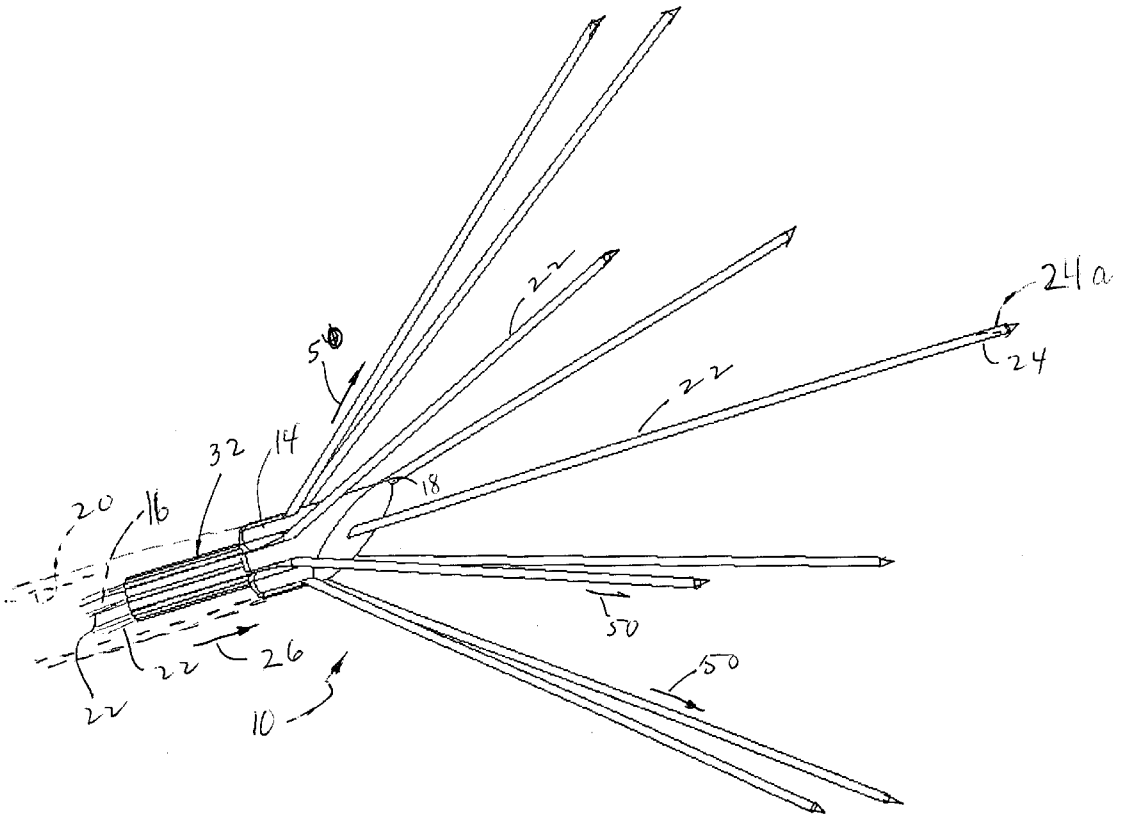

Petitioner's Exhibit 1010
Avanos v. Stratus

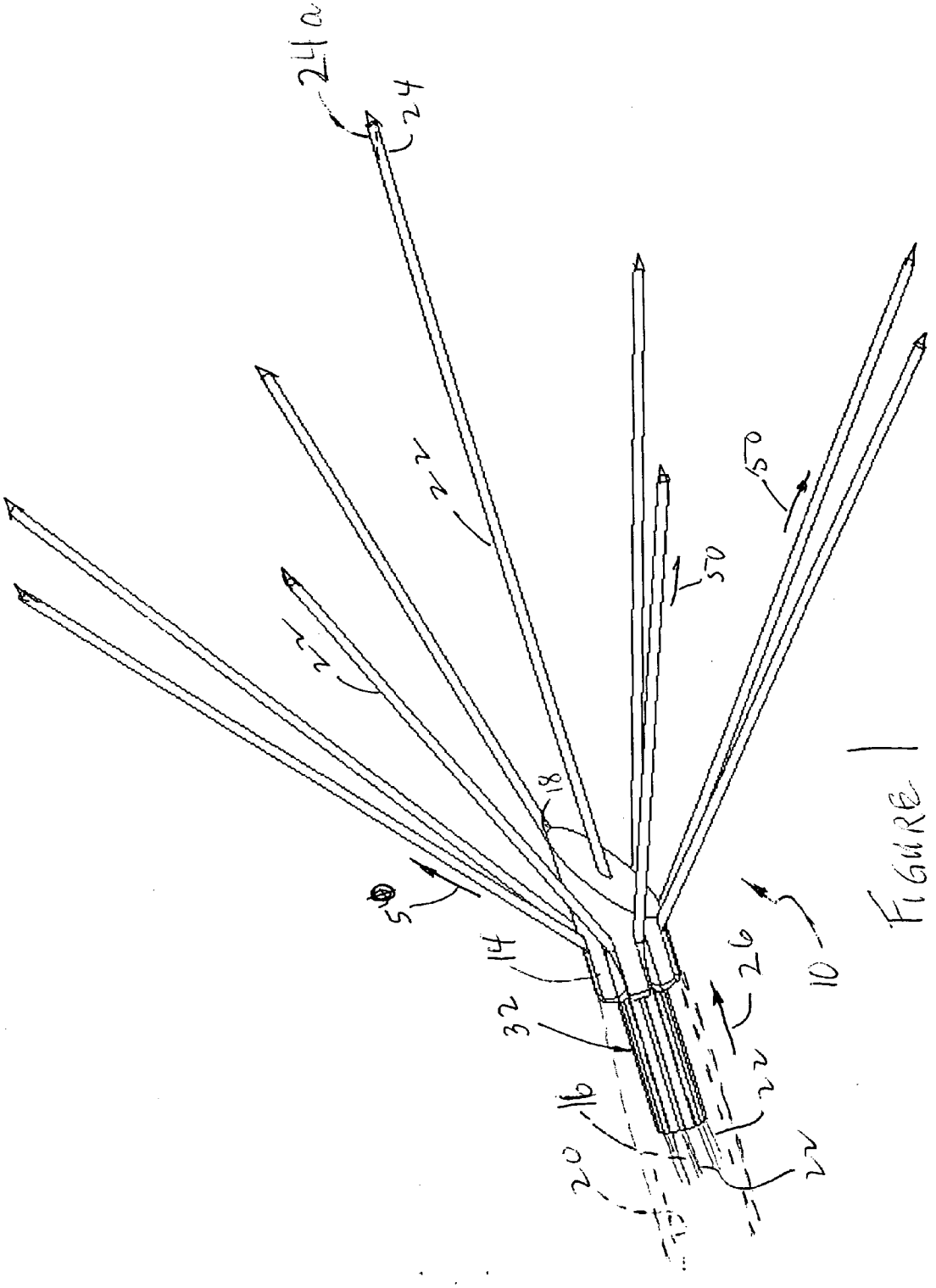

FIGURE 1

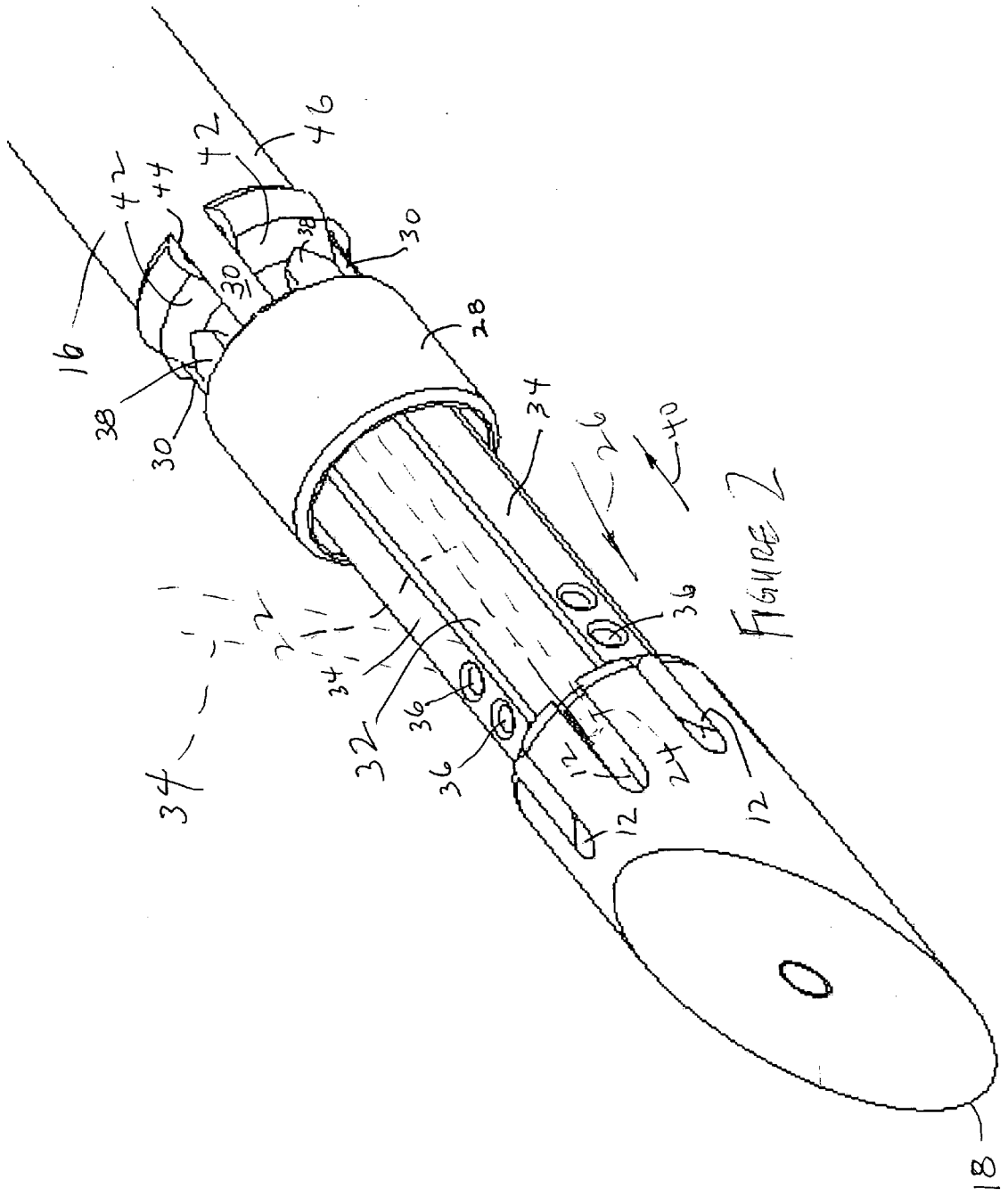
16
42
44
42
46
38
30
30
30
38
28
34
26
40
36
34
32
36
36
12
12
24
12
34
18

FIGURE 2

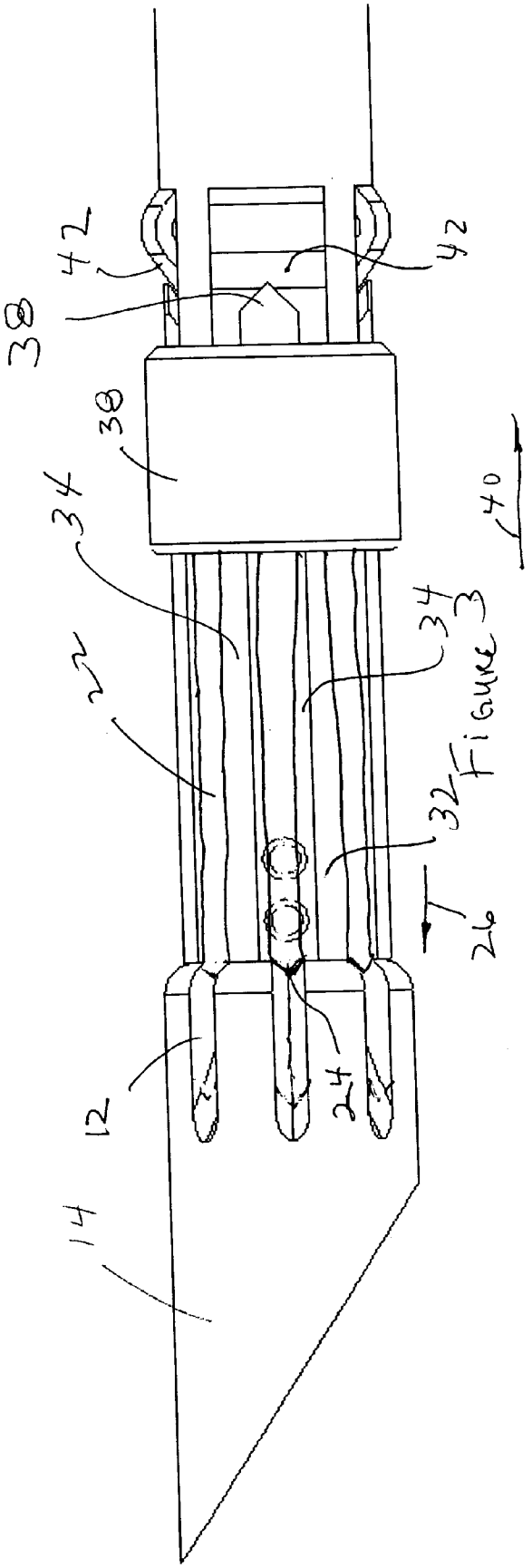

Figure 3

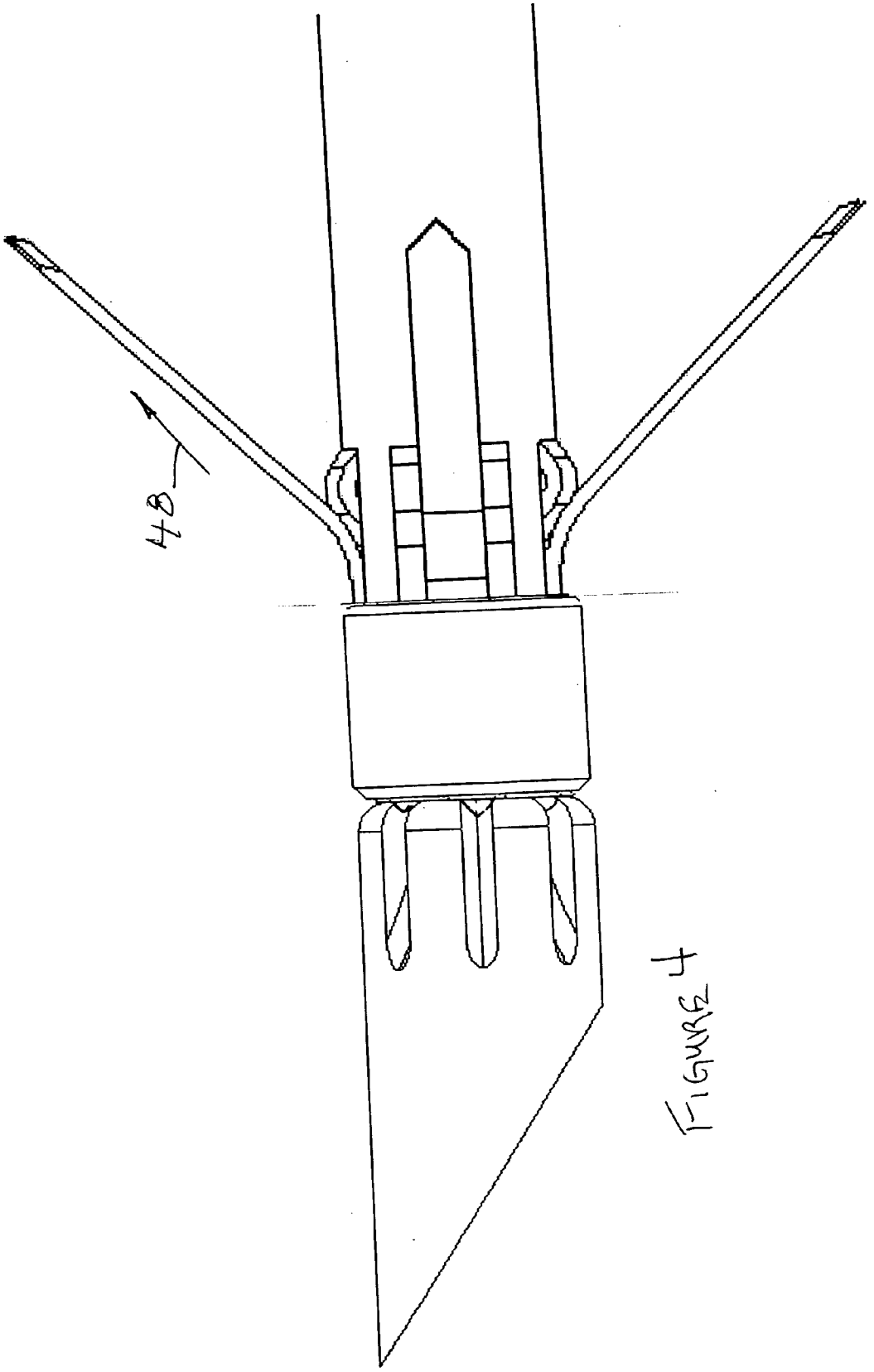

FIGURE 4

Petitioner's Exhibit 1010
Avanos v. Stratus

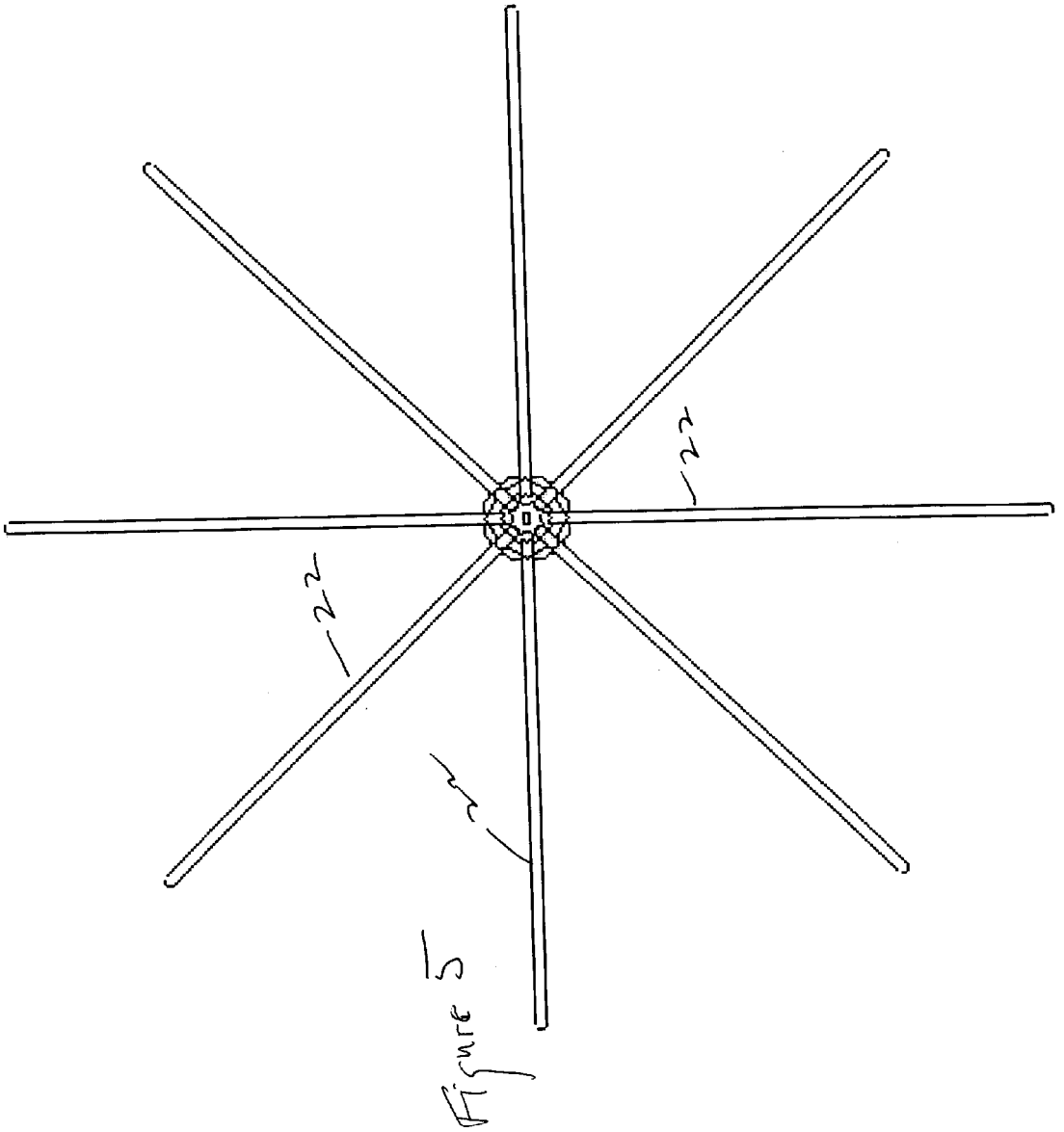

Figure 5

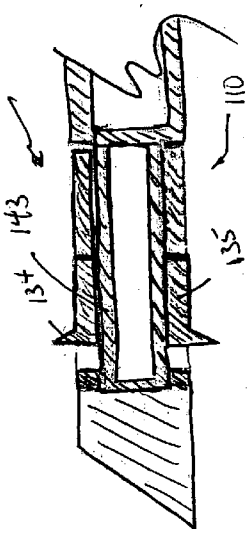

Figure 7

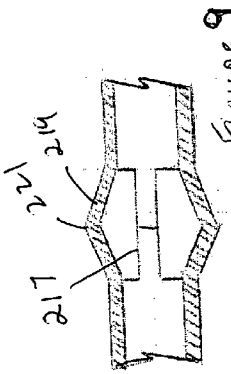

Figure 9

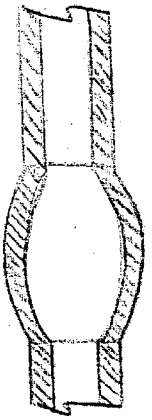

Figure 11

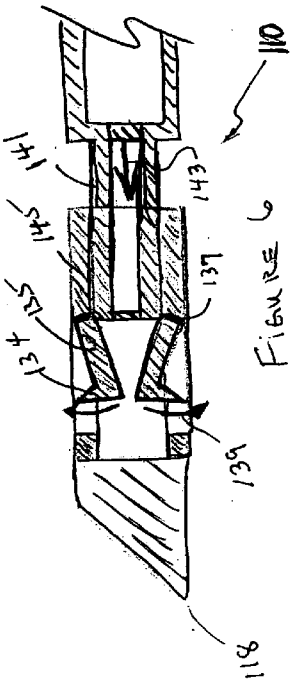

Figure 6

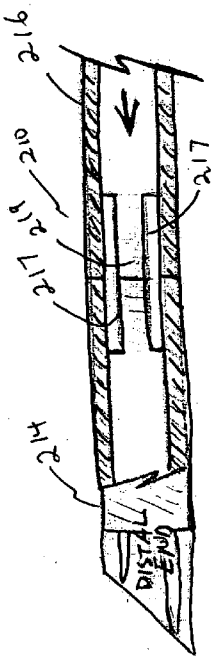

Figure 8

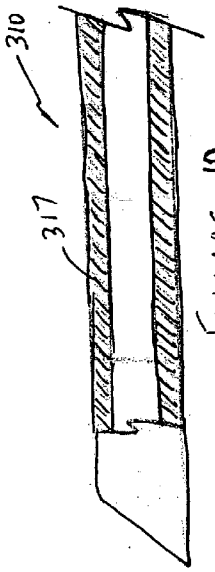

Figure 10

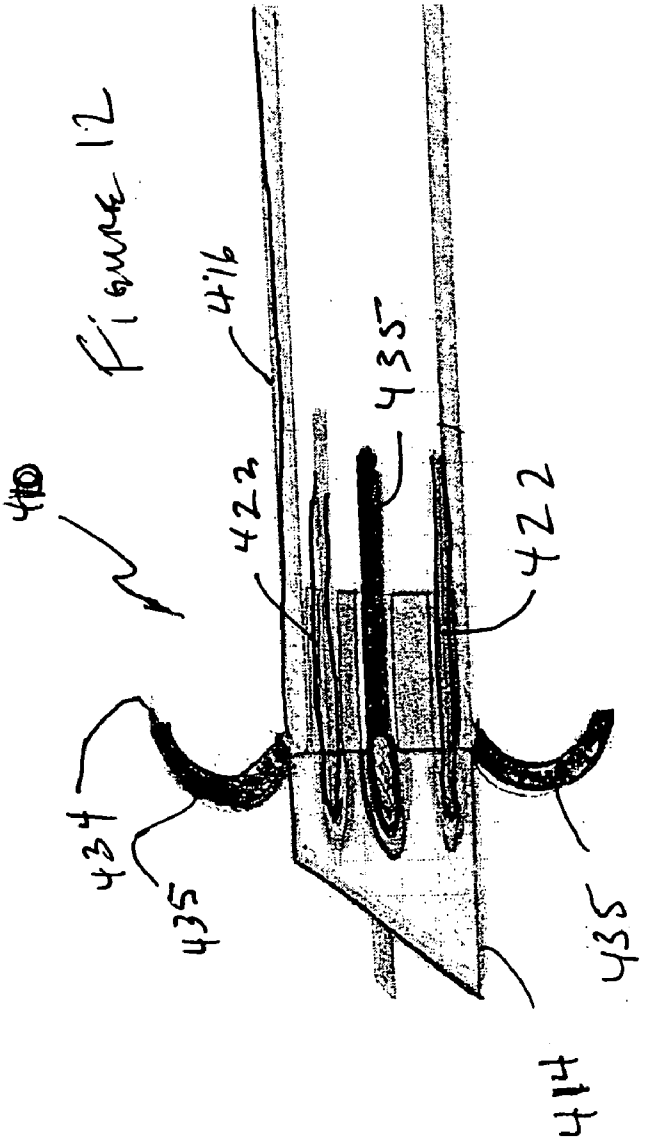

Figure 12

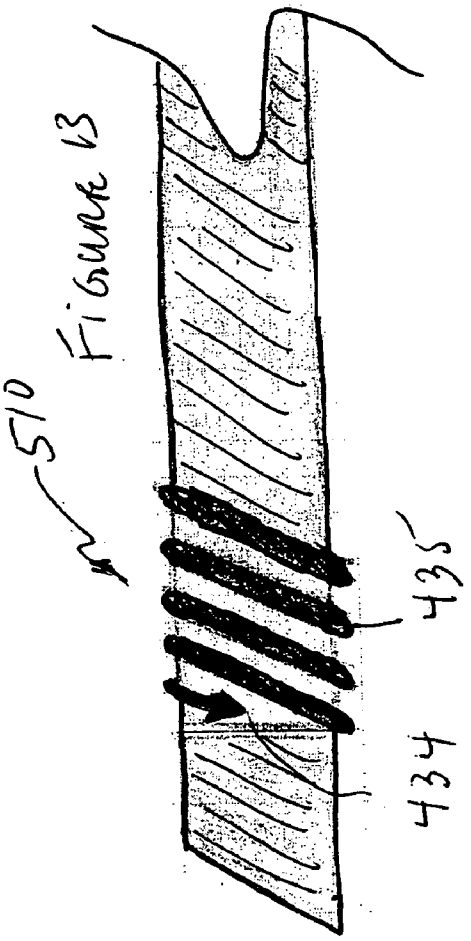

Figure 13

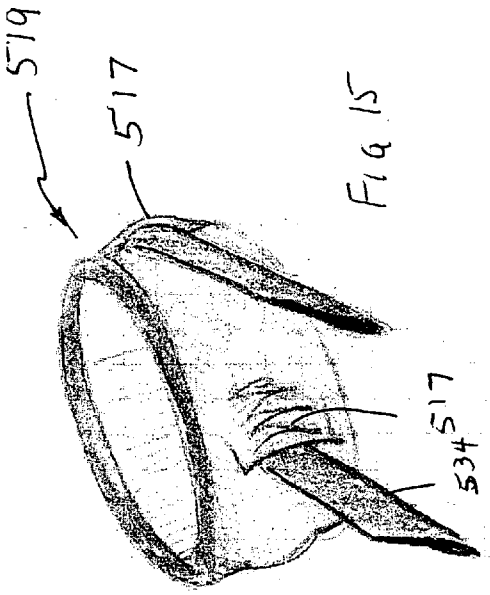

Fig 15

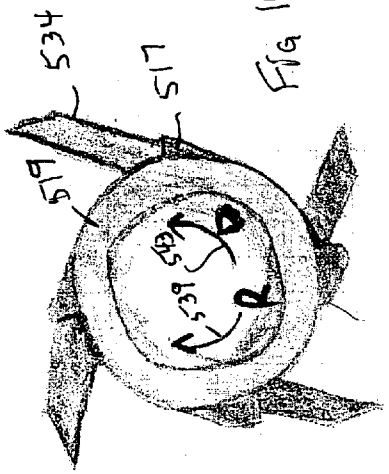

Fig 14

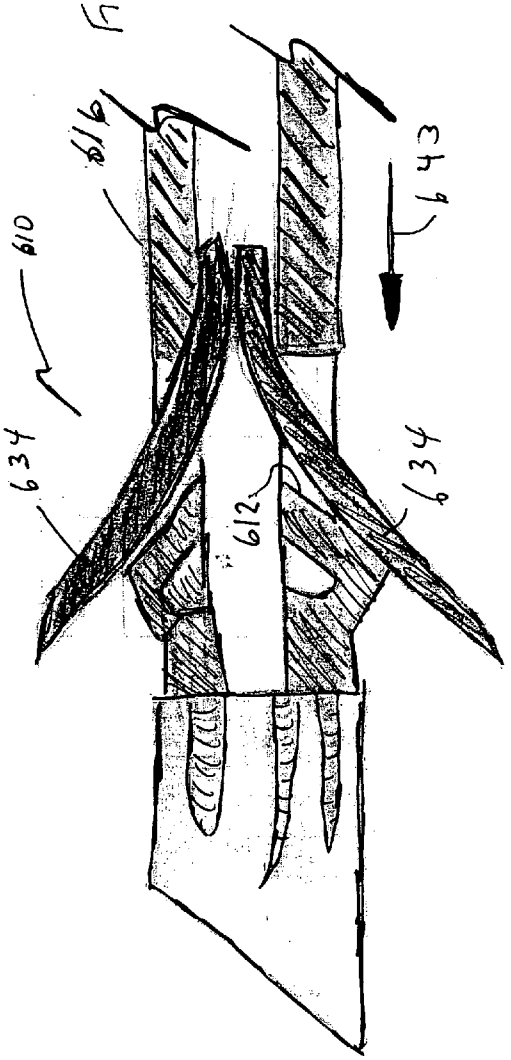

Fig 16

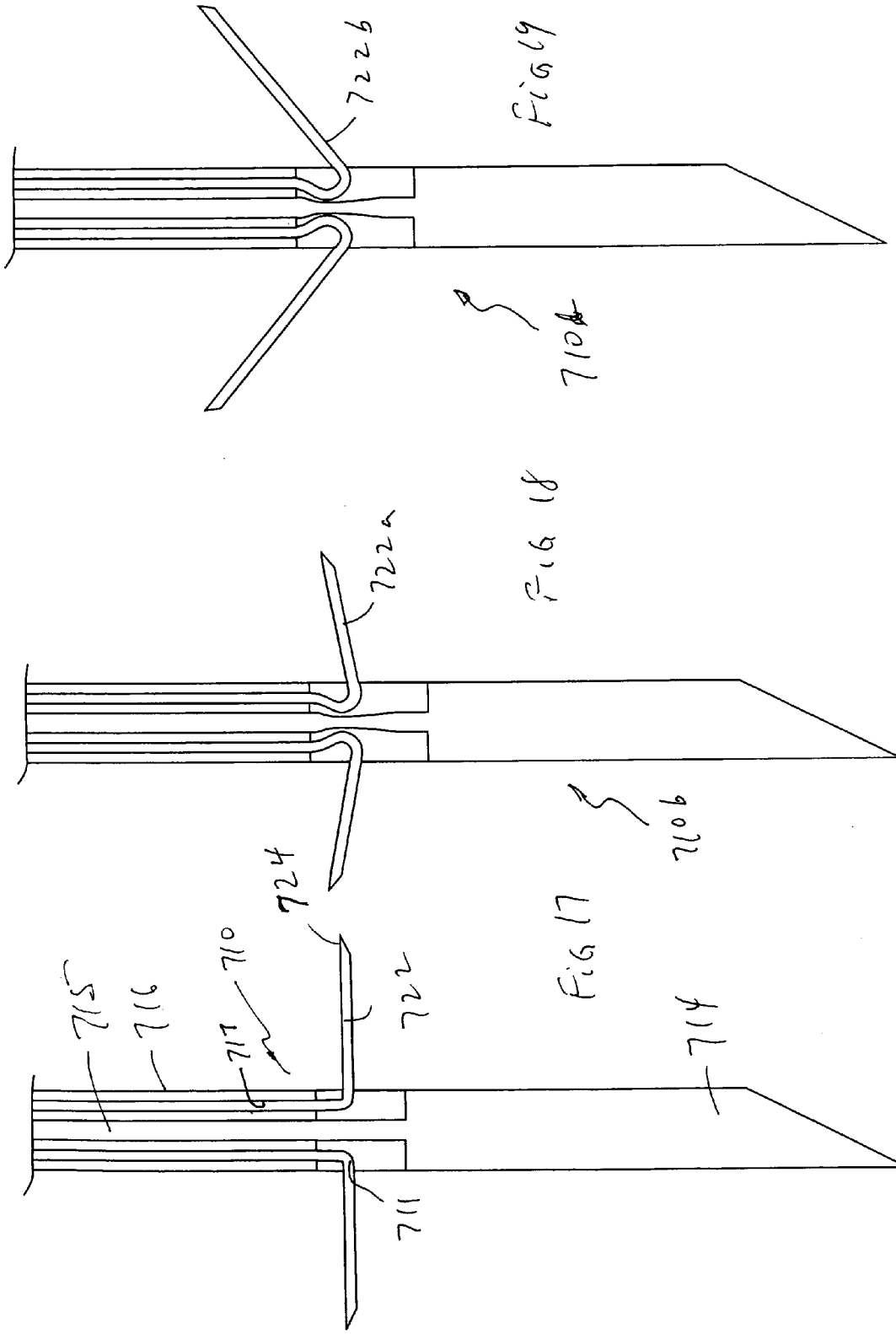

Fig 19

Fig 18

Fig 17

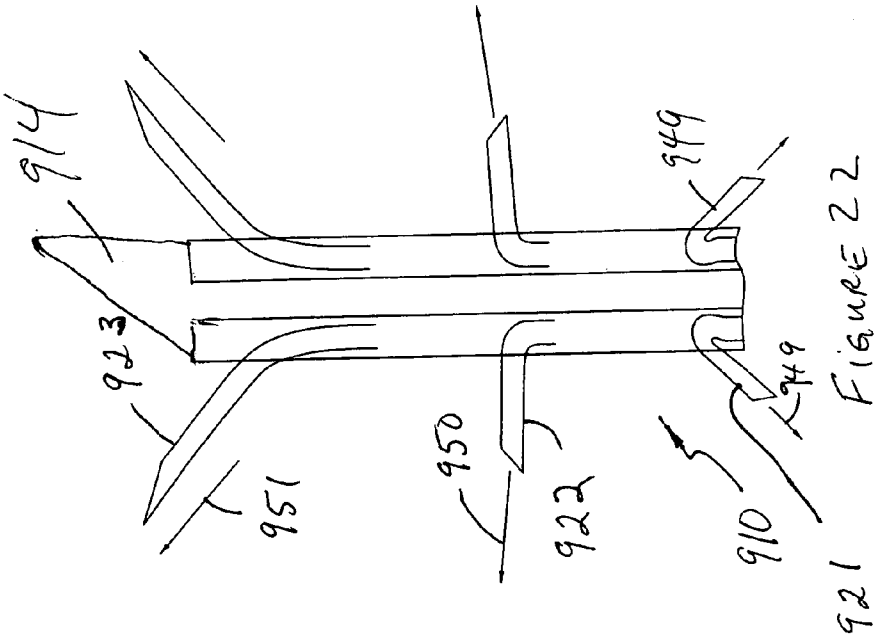

Figure 22

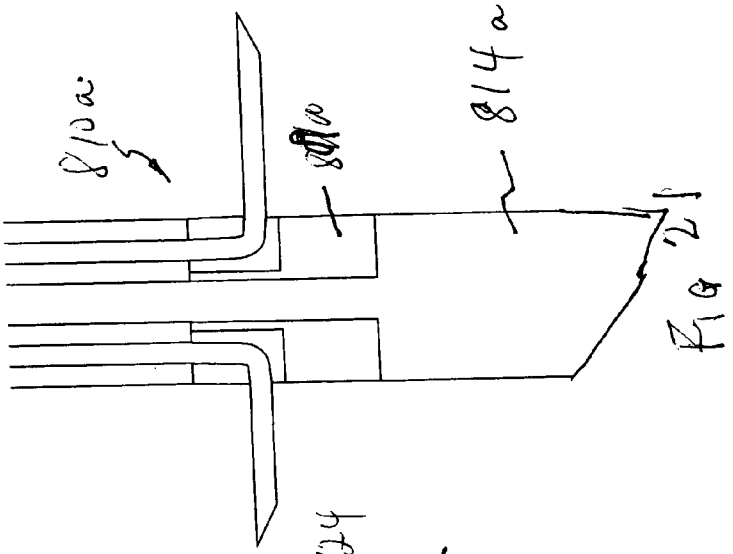

Fig 21

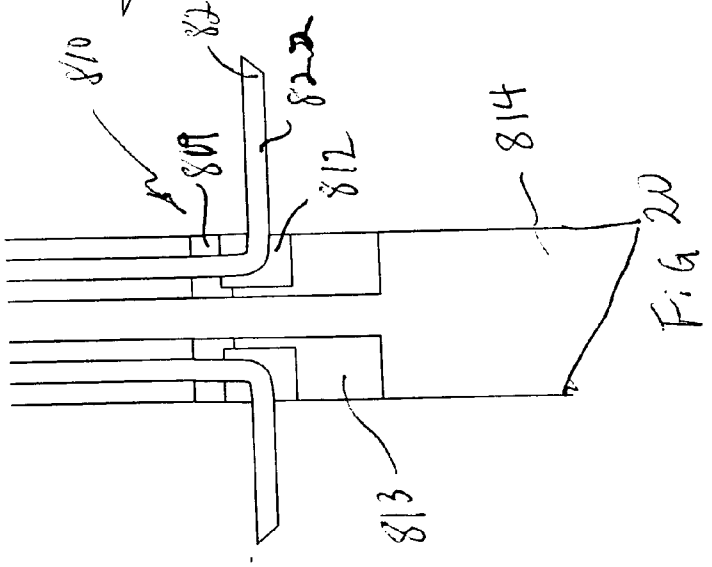

Fig 20

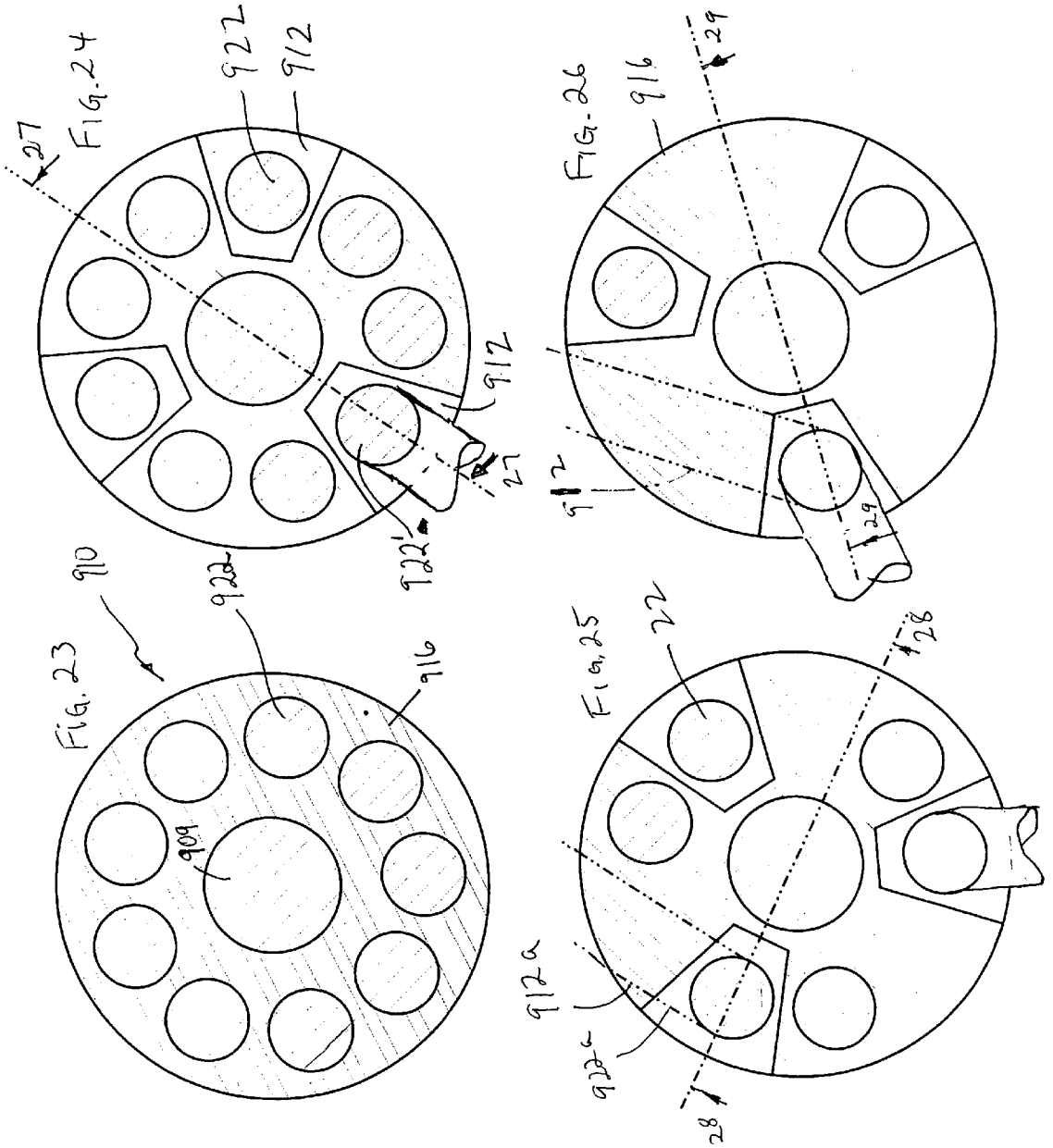
FIG. 24
922
912
27
912
27
922'
FIG. 26
916
29
912
29
FIG. 23
910
922
916
909
FIG. 25
22
28
912a
922a
28

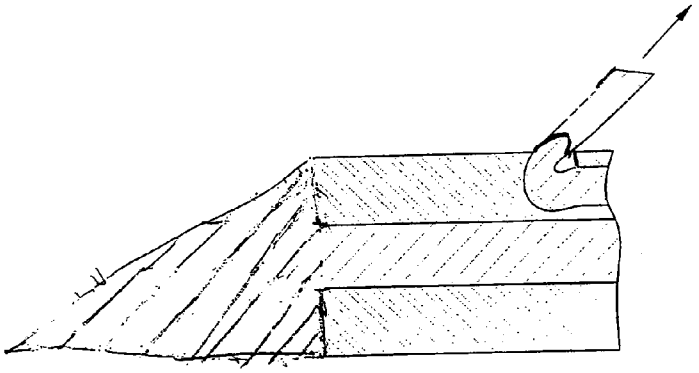

Fig 29

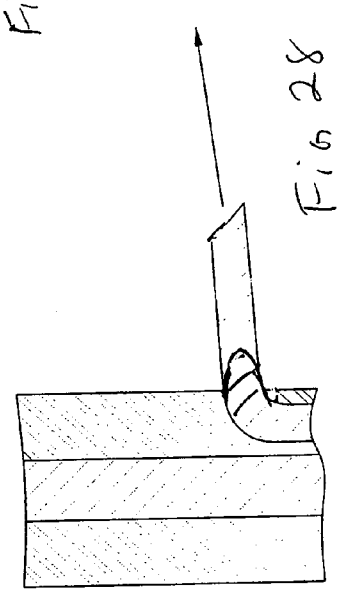

Fig 28

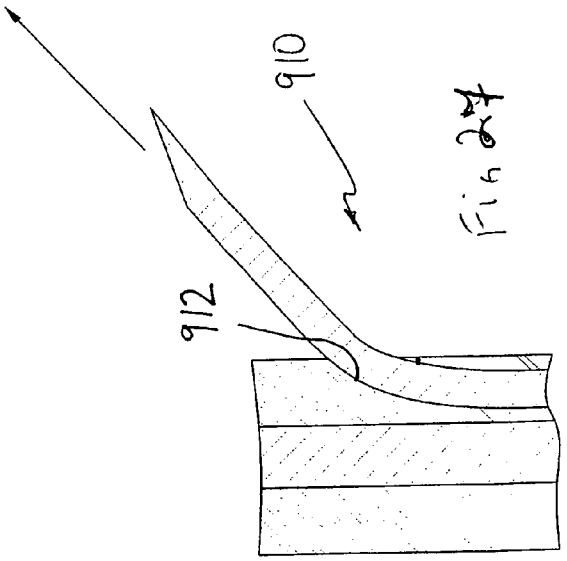

Fig 27

Petitioner's Exhibit 1010
Avanos v. Stratus

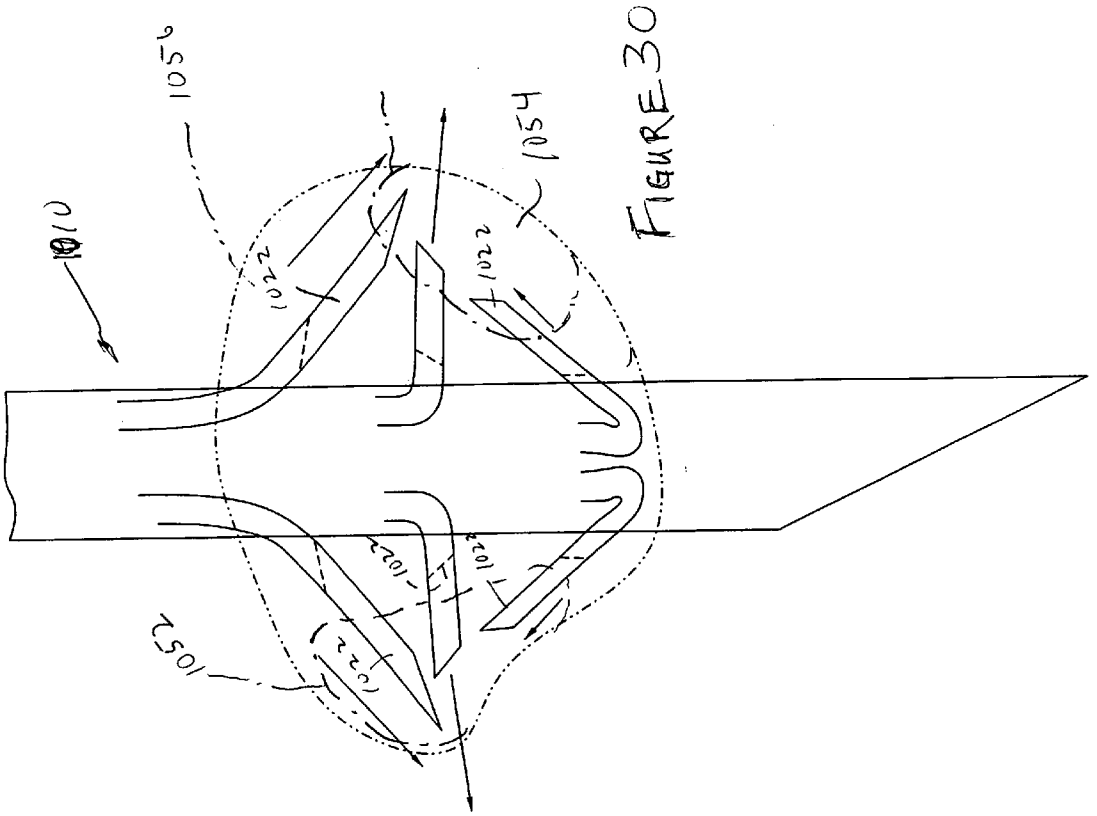

FIGURE 30

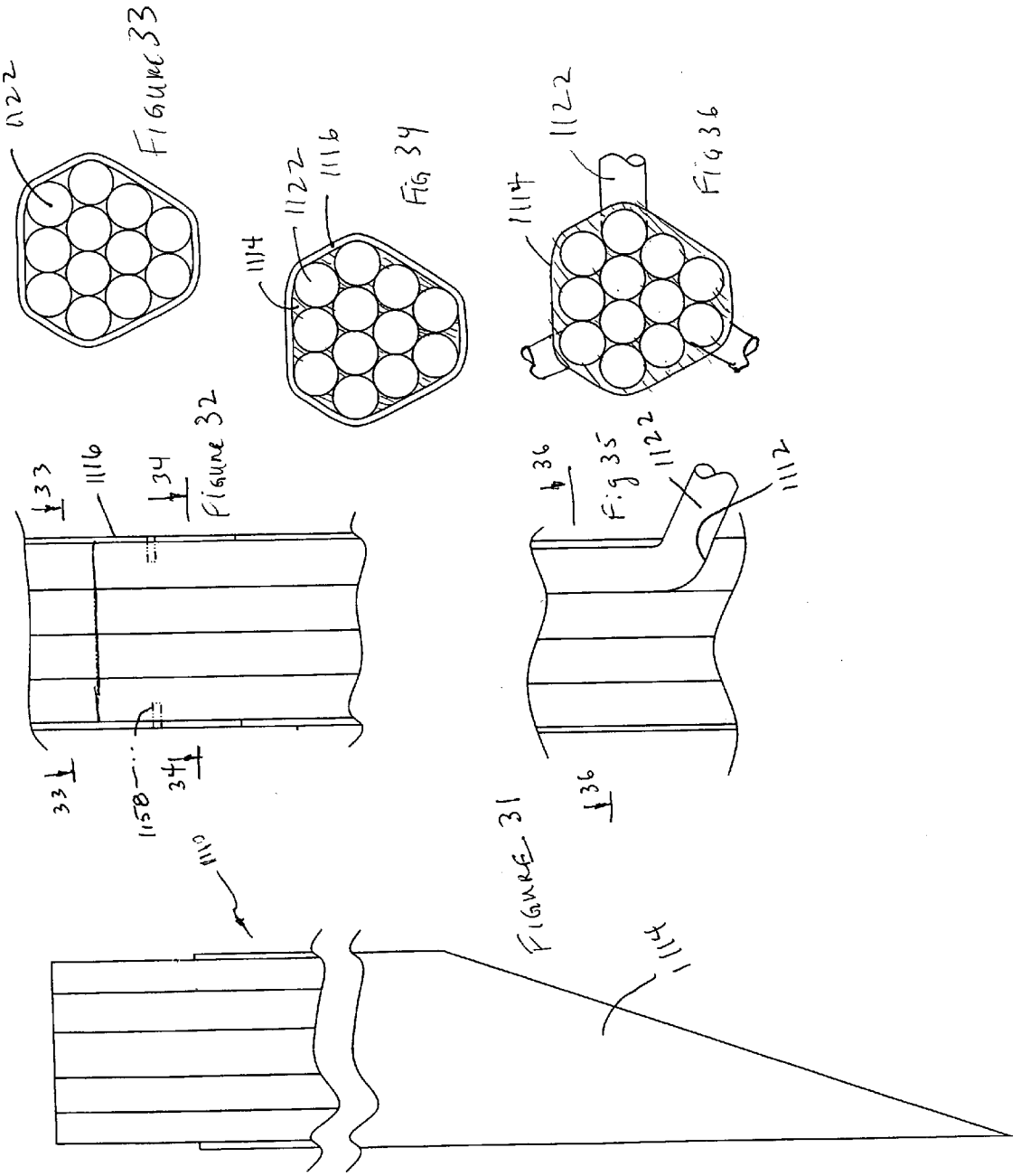
1122
Figure 33
1114
1122
1116
Fig 34
1114
1122
Fig 36
33
1116
34
Figure 32
33
1158
34
36
Fig 35
1122
1112
36
1110
Figure 31
1114

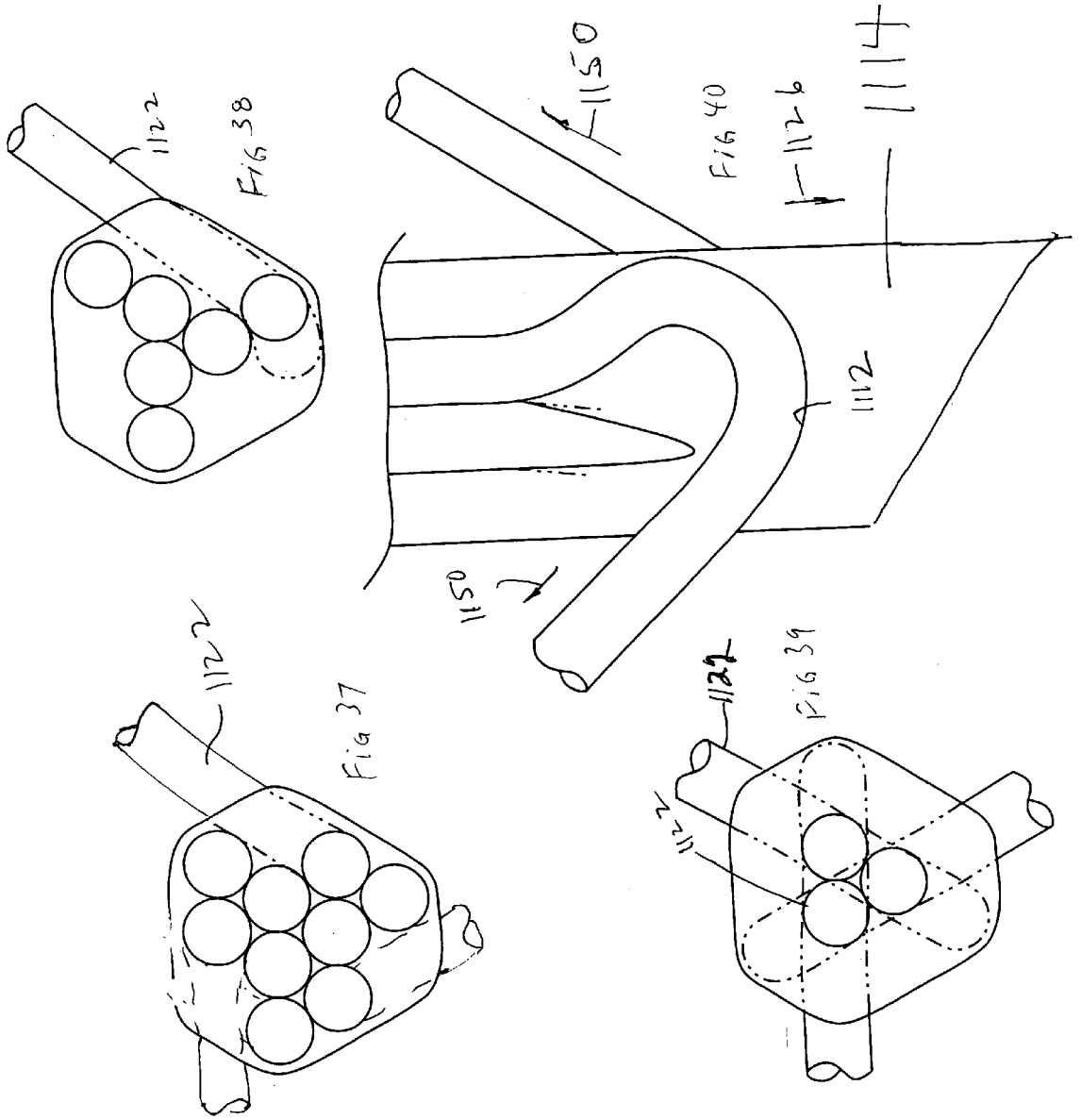
1122
Fig 38
1150
Fig 40
1126
1114
1112
1150
1122
Fig 37
1122
Fig 39
1122

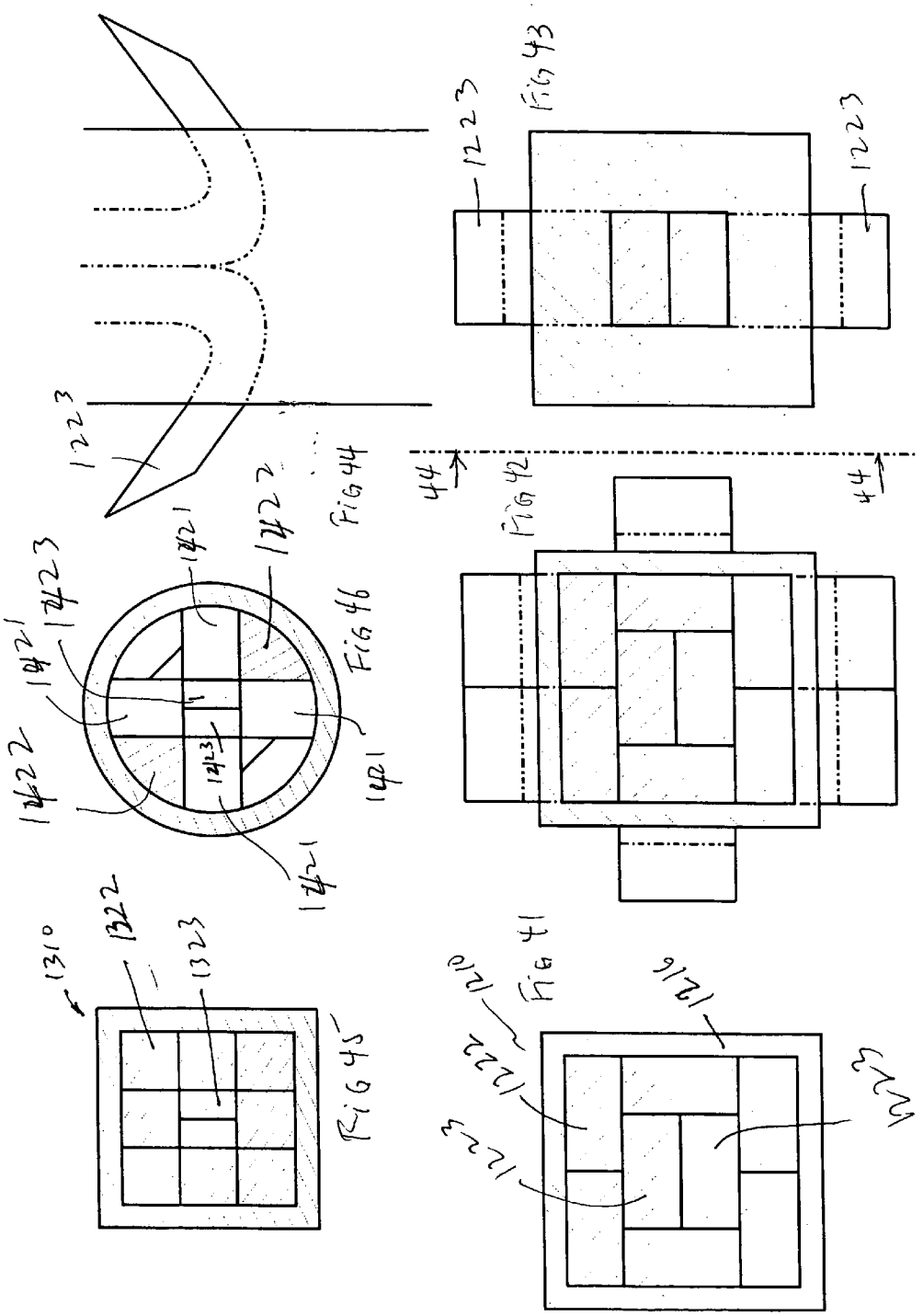
1223
Fig 44
1223
Fig 43
1223
44
Fig 42
44
1421
1422
1423
Fig 46
1421
1422
1423
1421
1421
1310
1322
1323
Fig 45
1210
1222
1223
1216
1223
Fig 41

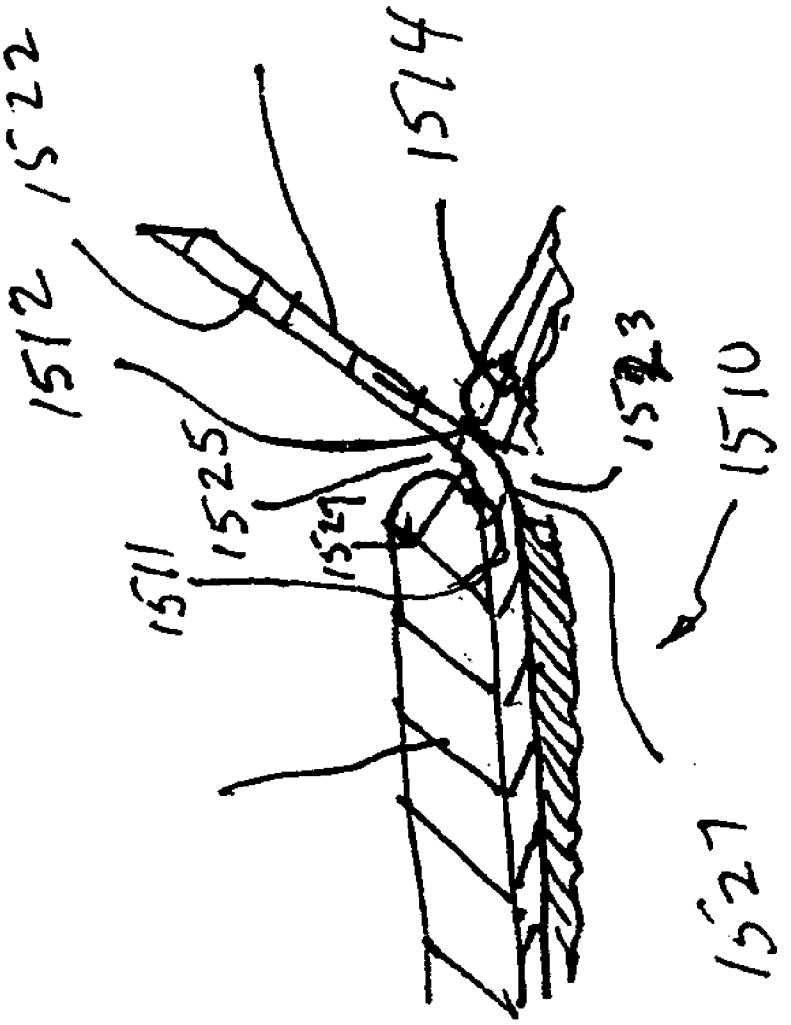

Figure 47

Petitioner's Exhibit 1010
Avanos v. Stratus

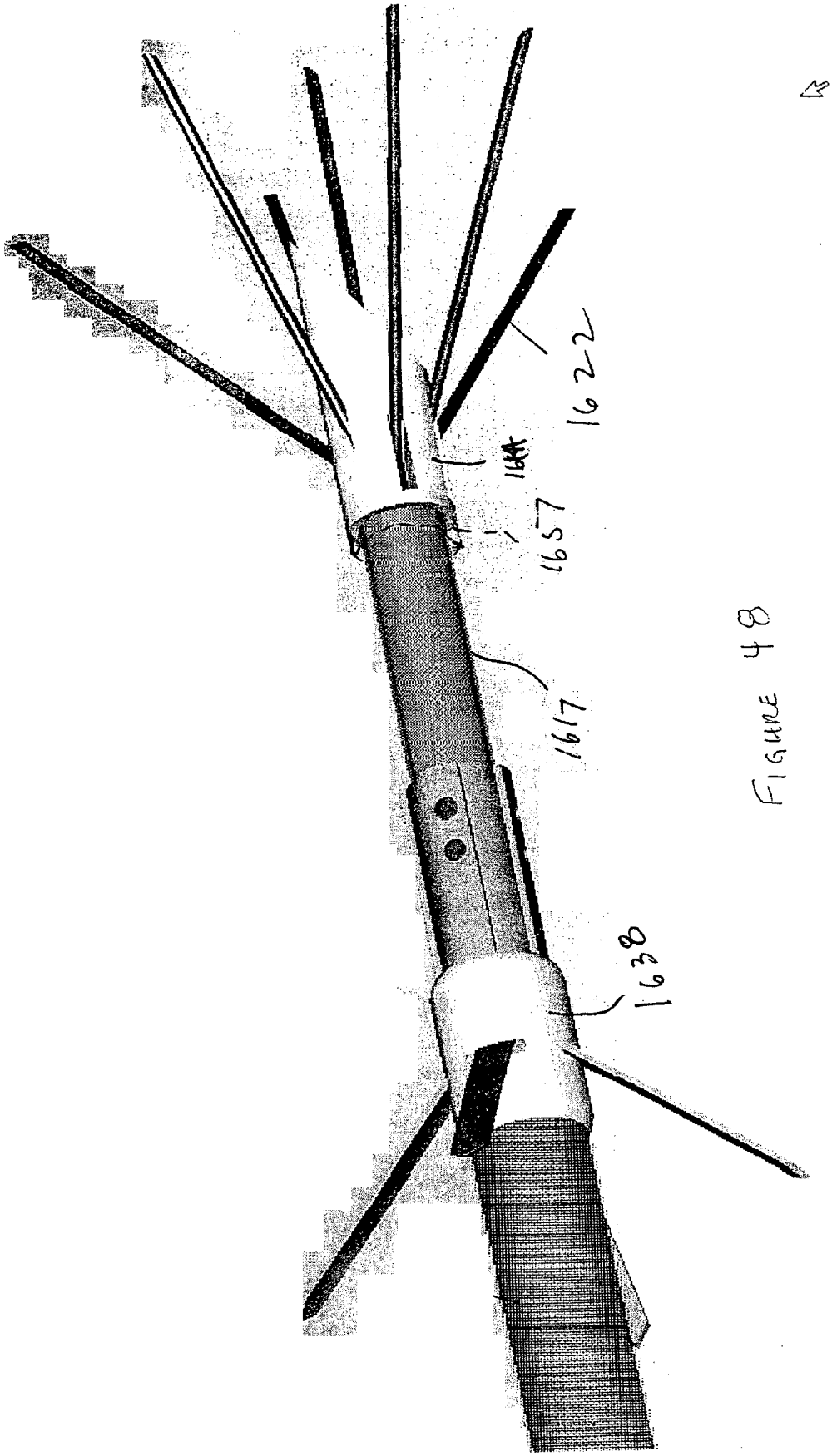

FIGURE 48

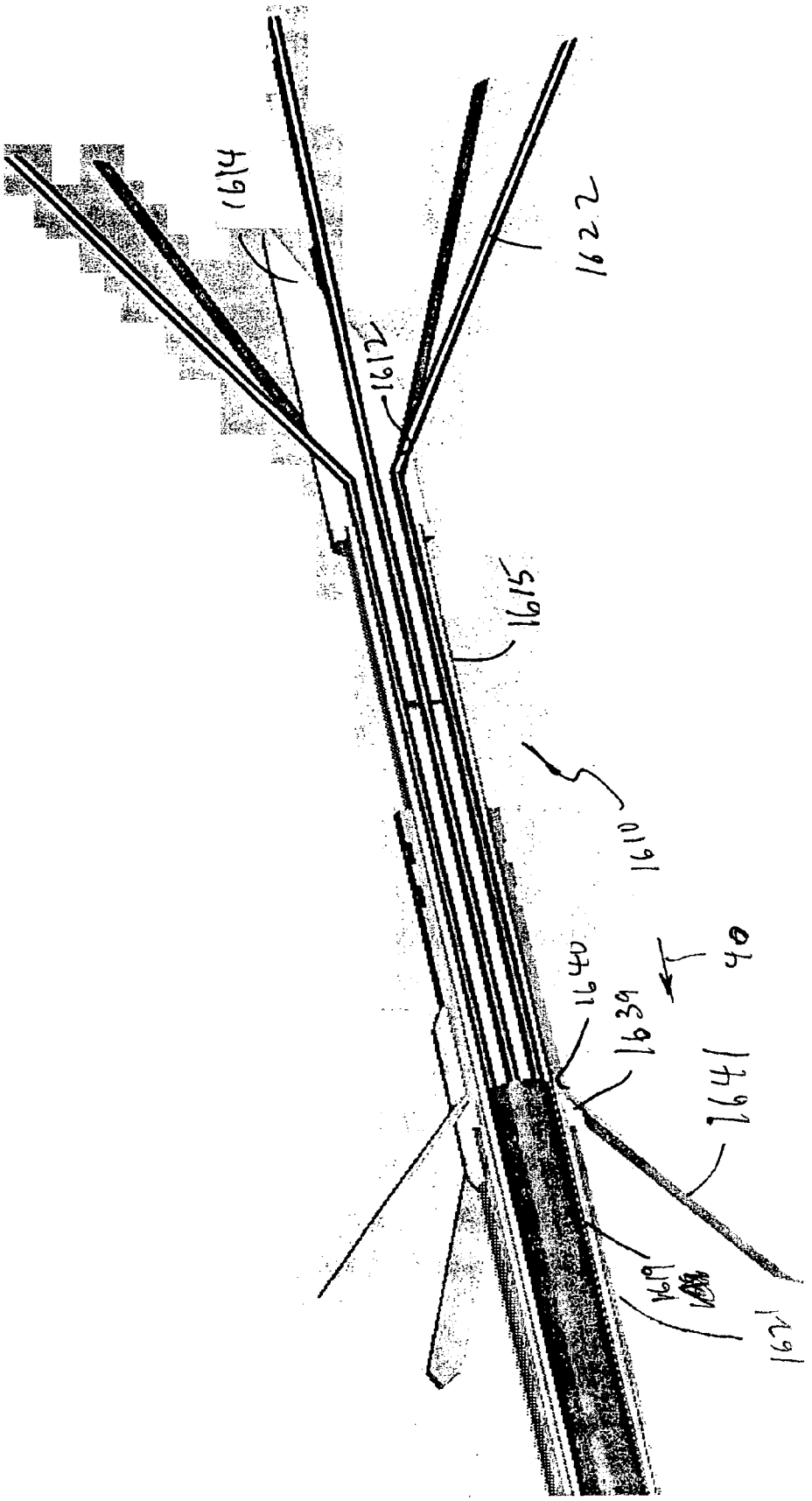

FIGURE 49

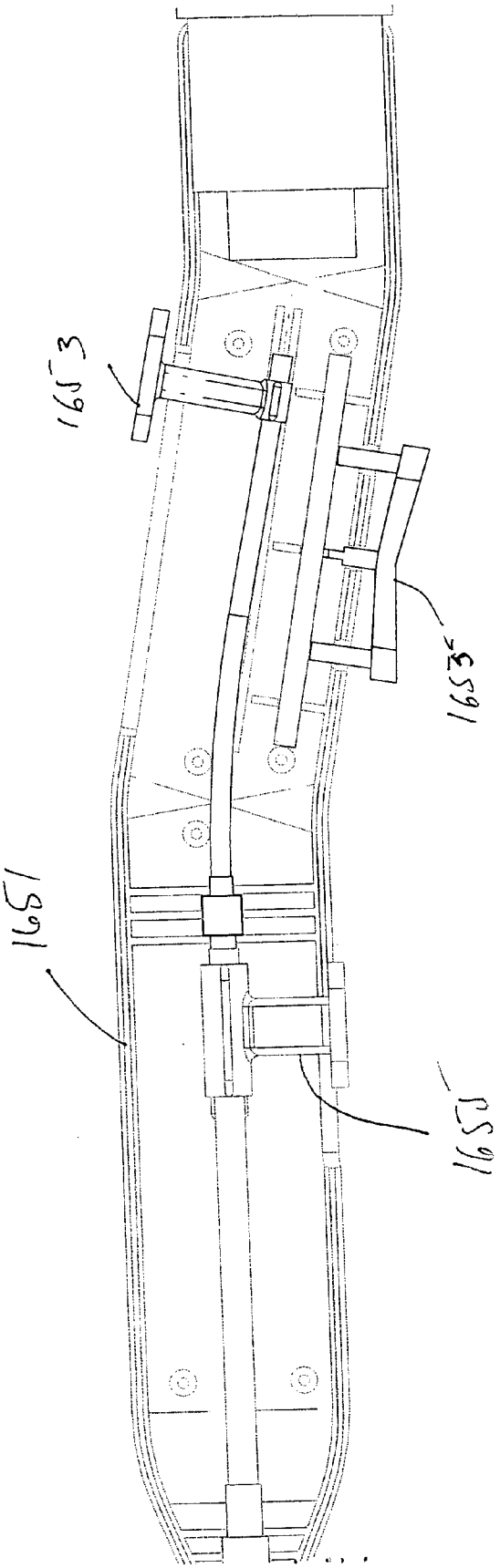

FIGURE 50

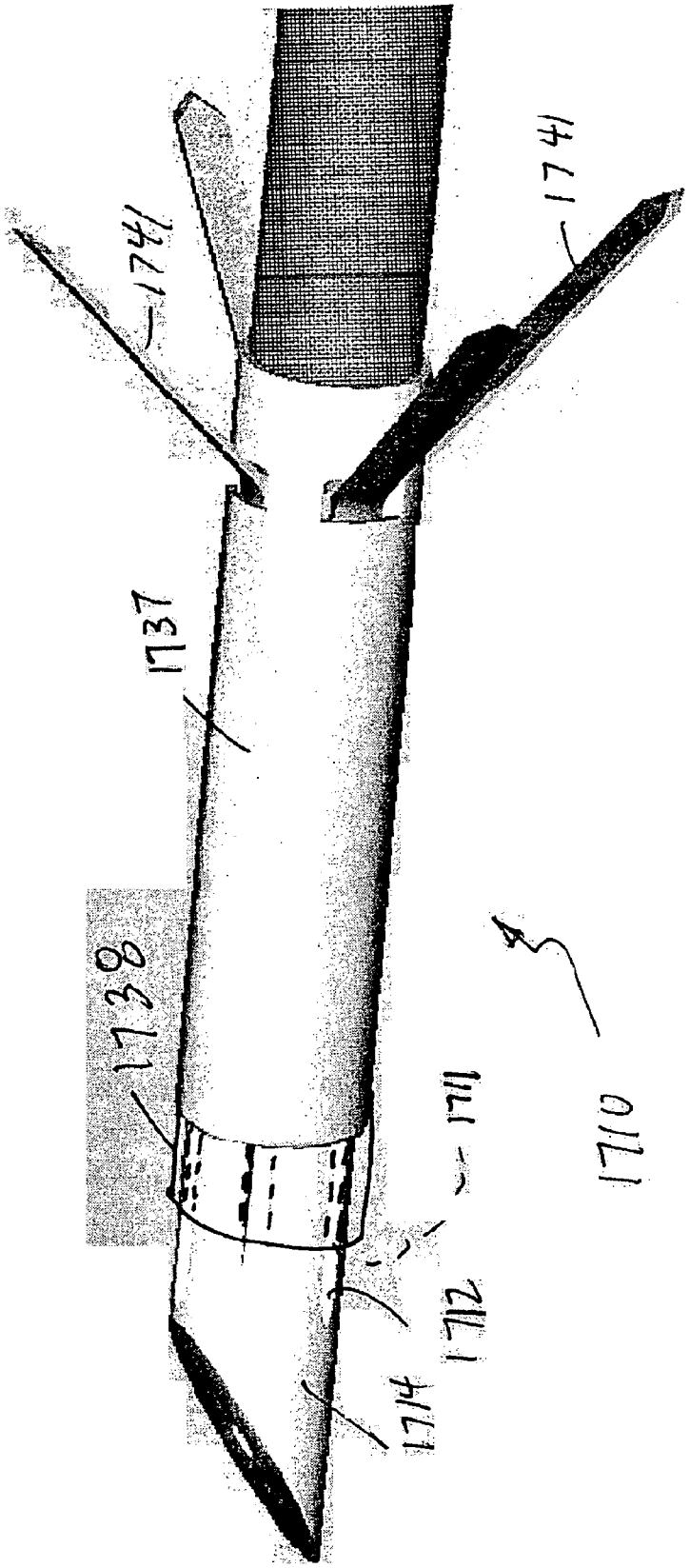

FIGURE 51

RADIO FREQUENCY ABLATION DEVICE FOR THE DESTRUCTION OF TISSUE MASSES

BACKGROUND

[0001] In the United States, approximately 230,000 women have hysterectomies annually. The primary reason for the performance of these hysterectomies is the existence of substantial symptoms associated with uterine fibroids. In the United States alone, there are more than six million women with uterine fibroid symptoms that prefer to suffer, rather than endure the risks and inconveniences associated with surgery, especially a major surgery that results in infertility. Outside of the United States, the situation is much the same, with millions of women suffering with fibroids in need of a safe alternative to hysterectomy.

[0002] Recently, another treatment option (uterine artery embolization) has been introduced. Generally, this procedure involves embolization of the arteries which feed the urine fibroid. This results in cutting off the blood supply to the fibroid and the shrinkage of the fibroid over time. However, the unacceptably high rate of complications severely limits its appeal to patients.

[0003] Myomectomy, which generally involves the surgical removal of the fibroid through the use of classical surgical procedures, is another treatment option. However, due to its rate of complications and long recovery time, this option is also not very appealing to patients. Typical complications involve risk of infection, relatively severe post-surgical pain, damage to the uterus and other risks normally associated with such types of surgery. Moreover, such damage to the uterus may be relatively subtle and may only come to light when the uterus begins to swell during pregnancy and ruptures at a weak point created during the surgery, resulting in loss of the fetus.

[0004] Still another alternative to treat the discomfort associated with uterine fibroids is the removal of the endometrium which lines the uterus. However, this procedure also results in infertility.

[0005] In an attempt to address these issues, an RF ablation probe of the type used to treat tumors in the human liver by hyperthermia has been successfully demonstrated to substantially shrink or eliminate uterine fibroids.

[0006] See, for example, U.S. Pat. No. 6,840,935 issued to Lee on Jan. 11, 2005, the disclosure of which is incorporated herein by reference. In that patent a method for treating pelvic tumors, such as uterine leiomyomata, includes inserting an ablation apparatus into the pelvic region and positioning the ablation apparatus either proximate to or into a pelvic tumor. The method further includes using a laparoscope and an imaging device, such as an ultrasound machine, to confirm the location of the pelvic tumor and placement of the ablation apparatus. An ablation apparatus with multiple needles or deployable arms that are inserted into the pelvic tumor is disclosed. The method involves delivering electromagnetic energy or other energy through the ablation apparatus to the tumor to induce hyperthermia and tumor ablation.

[0007] The particular device disclosed for ablating the tumor in U.S. Pat. No. 6,840,935 is of the type disclosed in U.S. Pat. No. 5,728,143, issued to Gough et al. on Mar. 17, 1998. Generally, that device comprises a plurality of resilient springy RF ablation antennae or electrodes which, importantly, are preformed with a curved configuration which they assume after exiting a sharp trocar-tipped catheter. Generally, as the antennae exit the trocar tip, they advance long curved paths (extending along a range of different paths in various portions of the tumor to be ablated) which are defined by their preformed springy shapes. The deployed antennae with their particular preformed shapes thus define an ablation volume. Various shape ablation volumes may be defined by varying the configuration of the curves which are preformed into the various springy antennae. Such devices are manufactured by Rita Medical Systems of Mountain View, Calif. Generally, such devices work by the antennae assuming their pre-formed configuration as they emerge from the trocar tip.

SUMMARY OF THE INVENTION

[0008] In accordance with the invention, it has been observed that difficulties are sometimes encountered in using such prior art curved electrode ablation systems. More particularly, it has been observed in accordance with the invention that fibroid tissues tend to be somewhat more difficult to pierce compared to other types of tumors and that this accounts for the problems encountered. To a limited extent, the difficulty of piercing the fibroid with the antennae may be mitigated by advancing very small increments of the ablation antennae into the fibroid, applying radiation to the antennae to induce hyperthermia and degrade the physical integrity of the tissue surrounding the antennae. The antennae may then be advanced into the somewhat deteriorated tissue and the application of radiation to the antennae continued to enlarge the physically deteriorated regions of the tumor, and, after a time, further advancing the antennae.

[0009] While this iterative advancement of the antennae, punctuated by relatively long periods of time during which advancement cannot be implemented, requiring the physician to wait for the desired degree of deterioration of the tissue into which the antennae will next be advanced, will work to effectively and minimally-invasively ablate the tumor, the procedure is time-consuming compared to a procedure in which antennae may be fully deployed and radiation applied to a large volume of the tumor during a single application or limited number of applications of RF energy.

[0010] Accordingly, while the above procedure has seen some commercial implementation, the time necessary for the procedure has made it relatively expensive and thus it is not available to many individuals. Moreover, the skill required for the performance of the procedure is relatively high, and thus few doctors are able to perform the procedure. Moreover, proliferation of this approach is not likely in view of the steep learning curve and the small number of individuals competent to perform this procedure. Nevertheless, in accordance with the invention, it is believed that a quick and easy to implement RF ablation procedure would be very attractive to doctors and patients in view of the low risk of complications and the relatively lower likelihood, under a typically encountered set of circumstances, that the uterus will be damaged and fail during a subsequent pregnancy.

[0011] In spite of the fact that this method for treating uterine fibroids has been known for a number of years, no such alternative apparatus has been devised for improving the procedure.

Petitioner's Exhibit 1010
Avanos v. Stratus

[0012] In accordance with the invention, the inventive ablation element comprises an elongated cannula having a proximal end and a distal end. The cannula defines an internal lumen within the cannula and a cannula axis. A plurality of conductors are contained within the lumen. Each of the conductors has a proximal end proximate the proximal end of the cannula, and a distal end proximate the distal end of the cannula. A plurality of ablation stylets each has a proximal end and a distal end, and each is coupled at the respective proximal end of the stylet to the distal end of a respective conductor. The stylets comprise a deflectable material. The conductors together with their respective stylets are mounted for axial movement. A trocar point is defined proximate the distal end of the cannula. A deflection surface is positioned between the trocar point and the proximal end of the cannula. The deflection surface is configured and positioned to deflect, in response to axial movement of the stylets in a direction from the proximate end of the cannula to the distal end of the cannula, at least some of the stylets laterally with respect to the cannula axis in different directions along substantially straight paths. The straight stylet is deflected from its straight trocar axis parallel path by the curved trocar guide surface in the mandrel over a curved or rounded counter surface directly adjacent to the curved track. This arrangement provides for a maximum in the amount of stylet deflection in a given volume. In accordance with the invention the stylet may only be contacted by guiding surfaces at two or three points to reduce friction. This rapid and abrupt change in direction is needed to limit the cross sectional area of the delivery cannula that carries the stylets and penetrates into the target tissue. The design of the pathway, the opposing curved surface over which the stylet is bent, the spring characteristics of the stylet and the level and orientation of the point on the stylet all have to be adjusted to minimize friction and yet maximize the degree of deflection that can be achieved. The stylet may be very easy to bend and take the curve easily but of insufficient structural intergrity to penetrate the target tissue. The stylet may be very rigid but then unable to make the needed deflection into the tissue. If the bend is made but the friction of deployment is too great the instrument might be difficult to use. Even within one tip mandrel a variety of angles may be desired. This is achieved by variously adjusting the curvature of the "paths" in the mandrel and the proximity of the rounded counter surface over which the stylet is bent to the depth of the curved path. When these stylets exit the mandrel into the tissue they define an ablation volume in the target tissue.

[0013] Each of the conductors may be selected from the group consisting of electrical conductors, radio frequency conductors, microwave conductors and optical conductors.

[0014] Each of the conductors may be integral with its respective ablation stylet. The solid contents of the lumen consist essentially of the conductors. Each of the stylets may be configured to assume a substantially straight configuration in the absence of external forces.

[0015] An ablation element further comprises a a finger operated slider, pliers activator or motor member or members or other drive system coupled to the conductors to drive axial movement of the stylets in directions from the proximal end of the cannula to the distal end of the cannula, and from the distal end of the cannula to the proximal end of the cannula through a plurality of positions. The trocar point may be defined at the distal end of a trocar member. The trocar member has an outside surface. The cannula has an outside surface. The trocar member has a proximal end secured proximate to the distal end of the elongated cannula. The outside surface of the cannula and the outside surface of the trocar point define a trocar surface.

[0016] The deflection surface comprises a number of ramps defined proximate the proximal end of the trocar point. The distal ends of the stylets are positionable proximate to the ramps and within the trocar surface.

[0017] In the preferred embodiment, the conductors and the stylets are electrical conductors. Each of the stylets may be configured to assume a substantially straight configuration in the absence of external forces.

[0018] The deflection surface comprises a plurality of channels guiding the distal ends of the stylets to the ramps. The cannula may be secured to the trocar member with the outside surface of the cannula proximate to the outside surface of the trocar member.

[0019] An ablation element also comprises an anchor mounted for movement between an internal position disposed within the trocar surface and an anchoring position extending laterally from the trocar surface through points external to the lumen. A drive member is disposed within the lumen and coupled to the anchor to drive the anchor between the internal position and the anchoring position.

[0020] The anchor comprises at least two pointed members mounted for movement in directions which have vector components which extend away from the axis of the cannula and away from each other.

[0021] The pointed members extend in a direction with a vector component that extends in a direction opposite to the direction in which the trocar point extends. The conductors bear against each other at least along a portion of their length within the cannula.

[0022] The conductors are driven by a drive mechanism which allows the conductors to move independently. The conductors have a length, a width and a thickness, the width being greater than the thickness, and terminate in a point oriented to allow deflection by the deflection surface. The conductors extend in different directions when they exit the deflection surface and extend to a variable extent.

[0023] The anchor members, alone may be utilized as electrodes for ablation of tissue. Alternatively, the anchor members may be used simultaneously in combination with the tip electrodes. When used together, this could create a larger ablation volume within the target tissue as compared to the ablation volume created when only the tip electrodes have ablative energy applied to them. When used alone, the ablation energy applied to the anchor members alone may be used in anatomic situations where retrograde deployment of electrodes is desired or even required.

[0024] The electrodes may be used in a monopolar fashion with the ablation stylets excited with RF energy and a return electrode being applied usually in the form a conductive pad in contact with a remote surface on the patient. Excitation may be applied in a bipolar fashion where one set of electrodes, such as the tip electrodes could serve as negative electrodes and the anchor electrodes may serve as the positive electrodes and create an ablation volume between the two sets of electrodes.

Petitioner's Exhibit 1010
Avanos v. Stratus

[0025] Separately, a cauterizing RF current can be supplied to the tip mandrel by the RF generator. Surgical RF generators may be separated into generators that are designed for ablation, or the controlled heating of tissue to bring about cellular death without charring or desiccation, and electrosurgical RF generators that are well known in the art for the ability to char and desiccate tissue for the purpose of coagulation of vessels to control bleeding, and cutting of tissue for rapid tissue dissection. Electrosurgical generators used for cauterization tend to be of higher power and current than those used for ablation. In accordance with the invention, cauterizing is delivered to the metal trocar tip of the cannula as the cannula is withdrawn to provide for cauterization of the track as the cannula is withdrawn. Traditional RF ablation generators apply a "track ablate" mode of somewhat higher wattage of ablation energy for this purpose, but do not approximate the energy delivered to the tissue by electrosurgical generators known in the art, as is employed in the present invention.

[0026] The conductors are driven by a drive circuit which varies the amount of energy supplied to the stylets and/or the length of the stylets and/or the length of time during which power is supplied to the stylets and/or the angular orientation of the ablation element.

[0027] The parameters of stylet length, stylet power, stylet actuation time and/or angular orientation may be controlled by a computer in response to a computer program having an input comprising feedback information from the tissue area being operated on and/or a preset program.

[0028] An anchor or anchors are mounted for movement between an internal position disposed within the trocar surface and an anchoring position extending laterally from the trocar surface through points external of the lumen. A drive member is disposed within the lumen and coupled to the anchor to drive the anchor between the internal position and the anchoring position. The anchor comprises one two or more pointed members mounted for movement in a direction which has vector components which extend away from the axis or the cannula and in the case of two anchors, also extend away from each other.

[0029] The front end is a trocar point defined at the distal end of the trocar member.

[0030] The anchors may be deployed in response to rotary motion. The anchors are deployed by bearing against a deflection surface. The anchors are made of a springy material which may assume a curved configuration when not subjected to external forces.

[0031] As compared to a conventional hysterectomy, the present invention is thus directed to a device for the treatment of uterine fibroids and other tissue masses that meets the needs of women by conserving the uterus and reducing recovery time from 6 to 8 weeks to 3 to 10 days.

BRIEF DESCRIPTION OF THE DRAWINGS

[0032] FIG. **1** is a perspective view of the multiple antenna ablation device of the invention;

[0033] FIG. **2** is a perspective view of a delivery manual with an anchoring system;

[0034] FIG. **3** is a front view of the inventive probe with anchor system of the device illustrating the trocar before deployment of the anchor;

[0035] FIG. **4** is a perspective view of the apparatus of the present invention with anchors deployed;

[0036] FIG. **5** is a front plan view with nine trocars deployed;

[0037] FIG. **6** is a cross-sectional view of an alternative anchoring structure;

[0038] FIG. **7** is a cross-sectional view illustrating the position of the deployed anchors in the embodiment of FIG. **6**;

[0039] FIG. **8** is a cross-sectional view illustrating another alternative anchoring structure;

[0040] FIG. **9** is a cross-sectional view illustrating the anchoring structure of FIG. **8** after applying force to actuate the anchors;

[0041] FIG. **10** is a cross-sectional view of yet another alternative anchor structure;

[0042] FIG. **11** is a cross-sectional view of the ballooned anchor structure of FIG. **10**;

[0043] FIG. **12** is a side plan view illustrating a resilient curved configuration anchoring structure for trocars made of springy wire material;

[0044] FIG. **13** is a side plan view of a structure with a spiral anchoring device;

[0045] FIG. **14** is a top plan view illustrating a rotatably deployable anchoring structure;

[0046] FIG. **15** is a perspective view of the anchoring structure of FIG. **14**;

[0047] FIG. **16** is a cross-sectional view illustrating structure for deployment of an anchor which extends the entire length of the cannula to a suitable actuation structure;

[0048] FIG. **17** is another alternative embodiment of the inventive trocar with stylus emerging substantially vertically to the trocar point;

[0049] FIG. **18** is yet another alternative embodiment of the inventive trocar with stylus emerging in a slightly retrograde fashion relative to the direction of advancement of trocar point;

[0050] FIG. **19** is still yet another alternative embodiment of the inventive trocar with stylus emerging in a highly retrograde fashion relative to the direction of advancement of trocar point;

[0051] FIG. **20** is a front view of the delivery surface of the embodiment of the inventive trocar comprising a sandwich of a proximal plastic angular member, a metal mandrel and a distal plastic annular member;

[0052] FIG. **21** is a front view of the embodiment of the inventive trocar comprising a single plastic annular member with a meal guide member;

[0053] FIG. **22** is a schematic view of an embodiment of the invention illustrating the different directions of stylet deployment;

[0054] FIG. **23** is a cross-sectional view, along lines **23-23** of FIG. **27**, of the plurality of passages with ablation elemental wires;

Petitioner's Exhibit 1010
Avanos v. Stratus

[0055] FIG. **24** is a cross-sectional view illustrating the positions of deployment for a first group of stylets;

[0056] FIG. **25** is a cross-sectional view illustrating the positions of deployment for a second group of stylets;

[0057] FIG. **26** is a cross-sectional view illustrating the positions of deployment for a third group of stylets;

[0058] FIG. **27** is a cross-sectional view along lines **27-27** of FIG. **24**;

[0059] FIG. **28** is a cross-sectional view along lines **28-28** of FIG. **25**;

[0060] FIG. **29** is a cross-sectional view along lines **29-29** of FIG. **26**;

[0061] FIG. **30** is a schematic view illustrating selective ablation with multiple ablation electrode lengths and variable time exposures;

[0062] FIG. **31** is a front view illustrating the structure of yet still another alternative trocar constructed in accordance with the present invention;

[0063] FIG. **32** is cross-sectional view of the juncture between the trocar point and the cannula;

[0064] FIG. **33** is a cross-sectional view along lines **33-33** of FIG. **32**;

[0065] FIG. **34** is cross-sectional view along lines **34-34** of FIG. **32**;

[0066] FIG. **35** is a cross-sectional view of the position and direction of bending of a stylet in the embodiment of FIG. **32**;

[0067] FIG. **36** is cross-sectional view along lines **36-36** of FIG. **35**;

[0068] FIG. **37** is a cross-sectional view illustrating the deployed positions of three stylets further downstream from the position illustrated in FIG. **36**;

[0069] FIG. **38** is a cross section view illustrating the deployed configurations of deflection of three stylets further downstream from the position illustrated in FIG. **37**;

[0070] FIG. **39** is a cross-sectional view illustrating the configurations of deflection of three stylets further downstream from the position illustrated in FIG. **38**;

[0071] FIG. **40** is a cross-sectional view illustrating the direction of the deployed stylets; FIG. **41** is a cross-sectional view illustrating the trocar of the present invention with relatively flat electrodes;

[0072] FIG. **42** is a cross-sectional view illustrating the employment of stylets in the embodiment of FIG. **41**;

[0073] FIG. **43** is a cross-sectional view illustrating the employment of anchors in the embodiment of FIG. **41**;

[0074] FIG. **44** is a cross-sectional view illustrating the position of the deployed anchor;

[0075] FIG. **45** is a cross-sectional view of an ablation trocar with square shaped stylets;

[0076] FIG. **46** is a cross-sectional view of a trocar with irregular shaped stylets; and

[0077] FIG. **47** is a schematic cross-sectional representation of low friction structure for advancing a stylet from the inventive trocar;

[0078] FIG. **48** is a perspective view of an alternative embodiment of the invention;

[0079] FIG. **49** is a cross-sectional view of the embodiment of FIG. **48**;

[0080] FIG. **50** is a cross sectional view of an operator handle useful with the embodiment of FIG. **48** and of **49**; and

[0081] FIG. **51** is a perspective view of still another alternative embodiment of the invention.

DETAILED DESCRIPTION OF THE BEST MODE

[0082] Hyperthermal treatment of tissues of the human body is well established. It has been used for hemostasis, destruction or ablation of tissues, tightening or shrinkage of various tissues and for other purposes. In accordance with the invention this and other methods for destruction of tissue may also be deployed, such as the delivery of laser light at high intensity levels, the use of conventional resistive heating elements, and other energy delivery devices which can be deployed within tissue. The source of heating may be varied and includes but is not limited to radiant heating, electrical current, radio frequency or microwaves, ultrasound and others.

[0083] A number of methodologies utilize radio frequency heating of tissues for ablation or shrinkage by the application of the energy to the tissues through specialized delivery devices. These devices often have electrodes or antenna that are placed into, or onto, the tissue to be treated. Some of these systems incorporate monitors that can provide feedback to the operator, or the device system itself, as to the progress of the treatment. This may be in the form of a readout of the temperature of various parts of the tissue, how much and over what time the energy is being delivered, or a feedback control system to the energy generator itself to control the delivery of energy to the tissue. Often the desired result is the heating of the tissue as quickly and uniformly as possible to destroy the target tissue without charring of target tissue or necrosis of tissue which is not being targeted. Charring of target tissue interferes with a uniform and predictable heating of the target tissue.

[0084] In accordance with the invention energy delivery devices are provided which are adapted to the destruction of target tissue at the site where the electrodes are located. Accordingly, the operator can deliver the treatment safely and effectively. One such target tissue for the devices of the present invention is a uterine fibroid. A physician may wish to place an energy delivery device to deliver energy such as radiofrequency current (RF) into the mass of the fibroid in order to cause it to shrink and become less symptomatic to the patient.

[0085] A uterine fibroma is a benign muscle tumor which forms in the wall of the female uterus. The tissue is highly vascular, firm and difficult to penetrate even with a sharpened needle. Where ablation of the tumor is to be preformed, it is important for the physician operator to carefully place the ablation stylets (for example radiofrequency electrodes) in the correct positions within the fibroid prior to applying ablative energy.

Petitioner's Exhibit 1010
Avanos v. Stratus

[0086] Furthermore, in accordance with the invention, it is recognized that it is useful if the electrodes or their delivery device experience minimal migration in the forward and backward directions during and after the electrode placement process.

[0087] In accordance with the invention, a device is provided that allows multiple straight electrodes (i.e. electrodes substantially without curvature) to be pushed into and through the tough fibroid tumor tissue. The straight electrodes have greater column strength and will have superior mechanical advantage over curved electrodes when deployed into this type of tissue and will permit easier, safer and more accurate placement. The straight electrodes are directed into the tissue at a variety of angles by a mandrel-like delivery member which serves as a deflection surface. This delivery mandrel does not impart a permanent shape to the electrode. Rather its action is limited to redirecting the electrode at an appropriate angle. The electrodes can be made of shape memory material such as NiTi.

[0088] In addition to the delivery mandrel, an anchor system is provided in accordance with the invention. A number of alternate designs are disclosed herein but the same are described by way of example and other suitable anchor systems may be employed.

[0089] The disclosed anchor systems allow the operator to stabilize the delivery device prior to deployment or withdrawal of electrodes, and thus improve electrode placement. The anchors prevent the device from migrating backward when pushing the electrodes into the firm tissue or forward when pulling the electrodes out.

[0090] The inventive system contemplates a variety of methods where the operator would apply the anchor, for example prior to electrode placement. Alternately, an anchor or anchors may be deployed after placement of the ablation electrodes. It is also contemplated in accordance with the invention that there are circumstances where anchors might not be applied at all. Likewise, in accordance with the invention it is contemplated that anchoring functions may also be performed by ablation stylets.

[0091] Referring to FIG. **1**, an ablation trocar **10** incorporating a plurality of delivery mandrel surfaces **12** (FIG. **2**) on a trocar point **14** is illustrated. In accordance with the invention, trocar point **14** is mounted on a cannula **16**. Cannula **16** may be made of any suitable material, such as plastic, or metal covered with a plastic insulating layer, to prevent ablative energy from leaking out of the device along the length of the cannula. Trocar point **14** includes a forward piercing edge surface **18**. Metal cannulas coated with an insulator are preferred for their strength.

[0092] Cannula **16** defines an internal lumen **20** which carries a plurality of stylets **22**. Stylets **22** are made of a springy conductive material such as a springy nickel titanium alloy. In accordance with the invention, each of the stylets **22** comprises a long and straight springy wire-like member which may be housed wholly within lumen **20** of cannula **16**, as illustrated in phantom lines in FIG. **2**. Because the ends of the wire-like stylets **22** are exposed, elements that form in the case of electrically conductive stylets for applying RF energy, at their tips which form stylets **22** after they exit trocar **10**, only the stylets **22** apply ablative energy, and thus tissue surrounding cannula **16** is substantially unaffected, except for the trauma caused by passage of the trocar through the tissue. The stylet may be withdrawn back into a tip mandrel **24** and the RF cauterizing energy applied to the tip mandrel alone during withdrawal of trocar **10** following completion of ablation. When it is decided to advance the tip **24** of a stylet into a tissue mass to be subjected to ablation, tip **24** is advanced in the direction of arrow **26**. Improved piercing may be obtained by sharpening the tip **24** to form a point **24***a*, as illustrated in phantom lines in FIG. **1**. As tip **24** is advanced, it bears against surface **12**, which deflects it as is more fully described below. The result is to cause the stylets **22** to be laterally deflected and assume the configuration illustrated in FIG. **1**.

[0093] Stylet **22** may be left in the position illustrated in FIG. **1** during withdrawal of the trocar, and may be driven with RF energy or other suitable input during withdrawal to achieve canterization of the elongated wound which formed the path of the trocar.

[0094] Referring to FIG. **2**, ablation trocar **10**, mounted on cannula **16** includes a collar **28** secured to a plurality of axially oriented ridges **30** disposed around the circumference adjacent cannula **16**. Collar **28** is rigidly secured to ridges **30** and is in spaced relationship to substantially concentric inner sleeve **32**. Inner sleeve **32** is slidably mounted within cannula **16** and is secured to and supports trocar point **14**. Inner sleeve **32** may be made of plastic or other flexible material.

[0095] A plurality of anchors **34** are secured by numerous means such as fasteners **36** or laser welding to inner sleeve **32**. Anchors **34** terminate at points **38** which are sharpened to easily pierce the tissue and thus anchor the trocar. Anchors **34** are disposed in the space between collar **28** and inner sleeve **32**, and are adapted to slide in the directions indicated by arrows **26** and **40**. Anchors **34** are made of a springy material and except for the influence of collar **28** would assume the position illustrated in phantom lines in FIG. **2**.

[0096] Cannula **16** also supports and is rigidly connected to a plurality of deflection surfaces **42** against which points **38** bear during the anchoring procedure, as will be described in detail below. Deflection surfaces **42** may be formed on a single annular member which is fitted on to and around the end of cannula **16** and which includes a plurality of arcuate surfaces **44** which bear against and may be glued or otherwise secured to the outer surface **46** of cannula **16**.

[0097] In accordance with the invention, a wide variety of materials may used to manufacture the inventive trocar **10**. For example, all members may be made of plastic except for the very tip of forward piercing edge surface **18** and stylets **22**.

[0098] When it is desired to use the inventive ablation trocar **10**, for example to ablate a uterine fibroid, trocar **10** is put into the configuration illustrated in FIG. **3**. In this position, the points **24** of each of the stylets **22** are not deflected and positioned at the input of the delivery mandrel surfaces **12**. Ablation trocar **10** is then advanced, in the case of a uterine fibroid, into the uterus in the manner described in the above-incorporated patent of Lee. Alternatively, the inventive trocar may be inserted through other paths, depending upon the location of the particular fibroid to be destroyed or other factors.

[0099] Once the trocar point **14** and those parts of ablation trocar **10** proximate thereto are in position for the deploy-

ment of ablation stylets **22**, anchoring may be implemented by withdrawal of inner sleeve **32** into cannula **16**. As sleeve **32** is withdrawn into cannula **16**, it pulls anchors **34** in the direction indicated by arrow **40**, pushing anchor points **38** against deflection surfaces **42**, causing the flexible resilient anchors **34** to be deflected laterally in the directions illustrated in FIG. **4**, under the combined influence of the inner surface of collar **28** and deflection surfaces **42** which induce an outward lateral bend.

[**0100**] In accordance with the present invention it may be desired that the anchors be relatively rigid and strong. Accordingly, in order to achieve the desired amount of bending in such a rigid member, the anchors are of a flat cross-section.

[**0101**] Also in accordance with the invention, the anchors may be made of a conductive material and driven with RF energy to serve as ablation stylets.

[**0102**] As the anchors are advanced with their tips moving in the direction indicated by arrow **48**, they pierce the surrounding tissue and thus anchor the trocar point **14** against retrograde motion when stylets **22** are advanced. The stylets are advanced by causing them to move from the position illustrated in FIG. **3** in the directions of arrow **26**. This causes them to bear against delivery mandrel surfaces **12**, deflecting them laterally and outwardly in the directions indicated by arrows **50** (FIG. **1**). This results in the distal end of the trocar **10** taking the configuration illustrated in FIG. **1**.

[**0103**] While the arrangement of stylets may be may to form any desired pattern, in the illustrated embodiment, a cone is achieved as can be seen with reference to FIGS. **1** and **5**.

[**0104**] If desired, anchors may first be deployed one at a time to minimize unwanted displacement of the distal end of trocar **10**. Likewise, if desired, anchors may not be deployed. An implementation of a use of the inventive trocar **10** without the anchors would be promoted by advancing the ends of stylets **22** one at a time, thus minimizing their tendency to displace the trocar.

[**0105**] Moreover, in accordance with the invention, the advancement of stylets singly, in combination or in any desired pattern, as well as the controlled single, multiple or other advance in a pattern for anchors may be controlled by an electronic control circuit, microprocessor computer or any other system, thus simplifying controls on the device held by the physician. Likewise, any desired steering system may be incorporated into the trocar, in addition to or as a substitute for manual manipulation of the uterus during the advancement of the trocar to and through the target tissue.

[**0106**] In accordance with the present invention, the wires which comprise stylets **22** extend from the distal end of trocar **10** to the proximal end of trocar **10**, not illustrated, where they may be connected to suitable advancement and retraction mechanisms. Such mechanisms may be of a conventional design. However, in accordance with the invention, the same may be motorized and/or computerized to operate automatically in synchronous or sequential fashion. Also, in accordance with the invention, the patterns of anchor and/or electrode deployment may be varied to achieve any desired effect.

[**0107**] After the stylets **22** have been successfully deployed in the tumor mass to be ablated, RF energy, in the instant example, is applied to the stylets using a signal intensity sufficient to heat target tissue to a sufficiently high temperature to result in hyperthermia and consequent destruction of the target tissue. However, care must be taken not to apply too much energy to the target tissue because charring of the target tissue in a very narrow region surrounding the stylet will create an insulative jacket around the stylet, preventing enough RF energy from passing through and reaching the target tissue beyond the jacket in sufficient quantities to result in ablation of that portion of the target tissue.

[**0108**] Referring to FIG. **6**, an alternative anchoring structure for an ablation trocar **110** including ablation electrode structure of the type illustrated in FIGS. **1-5** is shown. The trocar **110** illustrated in FIG. **6** includes a pair of anchors **134** mounted on arms **135** which are mounted for rotation about living hinges **137**. Arms **135** rotate in the directions indicated by arrows **139**.

[**0109**] Trocar **110** may be used in the same manner as the trocar illustrated in FIGS. **1-5**. After being advanced through the piercing action of forward piercing edge surface **118**, anchors may be deployed. When it is desired to deploy the anchors, actuator **141** is advanced in the direction of arrow **143**, resulting in the point of trocar **110** taking the position illustrated in FIG. **7**.

[**0110**] When the doctor desires to remove the trocar or advance it to another position, actuator **141** is withdrawn to the position illustrated in FIG. **6**, causing arms **135** to assume the position illustrated in FIG. **6** on account of the arms **135** resiliently returning to their original position. In accordance with the invention, the anchor may be formed by a plurality, for example, of resilient arms **135** mounted on a tubular member **145**. Tubular member **145**, resilient arms **135**, and anchoring points **134** may be made integral with each other and made of a plastic capable of taking a point.

[**0111**] Still yet another anchoring structure is illustrated in FIG. **8**. In ablation trocar **210**, cannula **260** includes a plurality of slits **217**. By the application of force bringing trocar point **214** closer to cannula **216**, the fingers **219** defined between slits **217** may be crimped as illustrated in FIG. **9**. The result is the definition of points **221**, which will tend to lock into surrounding tissues to anchor trocar **210**.

[**0112**] Yet another anchoring structure for a trocar **310** is illustrated in FIG. **10**. Here an intermediate section **317** capable of ballooning as illustrated in FIG. **11** is utilized as an anchoring structure.

[**0113**] Referring to FIG. **12**, a trocar **410** with the yet another anchoring mechanism is illustrated. In this embodiment, anchors **435** are formed of a resilient metal and have points **435**. Anchors **434** are preformed with a resilient curved configuration. In other words, anchors **434** are made of a springy wire material which is a delivered in a relatively straight configuration conforming to the path along which the trocar is advanced because they are located in cannula **416**. Upon exit from trocar **410**, anchors **434** tend to take the illustrated curved configuration, which they springingly return to when not subjected to external forces. The anchors thus extend along and in cannula **416**, exiting near the distal point **414** of the trocar. The anchors are advanced from the

Petitioner's Exhibit 1010
Avanos v. Stratus

cannula in the same manner as the ablation electrodes in the embodiment of FIGS. **1-5**. In accordance with this embodiment of the invention, stylets **422** (shown in the retracted position in the figure may be advanced out of trocar point **414** in the manner of the embodiment of FIGS. **1-5**.

[**0114**] Yet another approach is illustrated in FIG. **13**, where trocar **510** includes a spiral anchor **435**, which may, for example, surround the end of the cannula. Spiral anchor **435** may be rotated to advance anchor point **434** into the tissue adjacent the area to be ablated.

[**0115**] In accordance with the invention, it is also possible to utilized an anchoring structure such as that illustrated in FIGS. **14** and **15**. In accordance with this system, the cannula of the trocar incorporates feed-through cowls **517** defined in an anchor housing **519**. Anchors **534** are advanced out through cowls **517** by being driven with circumferential motion in the directions indicated by arrow **543**. Alternatively, they may be retracted by advancement in the opposite direction indicated by arrow **539**.

[**0116**] Referring to FIG. **16**, still yet another possibility is the employment in a trocar **610**, including a cannula **616**, which contains anchors **634** at the end of wire like elements which extend the entire length of the cannula to a suitable actuation structure. Such anchors **634** may be driven in the direction indicated by arrow **643**. Anchors **634** are driven out by delivery mandrel surfaces.

[**0117**] It is noted that the various anchoring mechanisms illustrated in FIGS. **6-16** may be used with any of the ablation electrode structures illustrated in the various embodiments of the invention described herein or with similar ablation electrode arrangements.

[**0118**] Turning to FIG. **17**, an alternative embodiment of the trocar **710** constructed in accordance with the present invention is illustrated. In accordance with this embodiment, ablation stylet **722**, which is an electrode, passes within the walls of the cannula **716** which has a plurality of passages **717**, which may be positioned at equal intervals along the circumference of cannula **716** and wholly within the sidewall of cannula **716**. Thus, during use, stylets **722**, after exiting deflection passages **711** in delivery member **712**, pierce the surrounding tissue through the action of points **724**. Good physical integrity is achieved by having a metal trocar point **714** secured to the distal end of central axial member **715**, which is also metal, which may also be thinned to allow additional volume for the deflection of the ablation electrode. Delivery member **712** may be made of metal to accommodate relatively high degrees of angular deflection by passages **711**. Such greater degrees of angular deflection and a thinned central axial member are illustrated in FIG. **18**, which has a stylet **722***a* with a slightly rearward motion being angled toward the proximal and of the trocar. FIG. **19** illustrates an even more retrograde path for stylet **722***b*.

[**0119**] As illustrated in FIG. **20**, the delivery surface of this embodiment of the inventive trocar **810** may comprise a sandwich of a proximal plastic angular member **809**, a metal mandrel **812** and a distal plastic annular member **813**. Distal plastic annular member **813**, in turn, provides support for trocar point **814**.

[**0120**] Alternatively, as illustrated in FIG. **21**, another embodiment of the inventive trocar **810***a* may comprise a single plastic annular member **809***a* with a metal guide member **812***a*. It is noted that the angle of point **824** is oriented to provide for easy sliding motion of stylet **822** in delivery passage **811**.

[**0121**] In accordance with one embodiment of the invention, as illustrated schematically in FIG. **22**, a trocar **910** may include rearwardly and proximally extending stylets, comprising, for example, radiofrequency or RF ablation electrodes **921**. Substantially vertically exiting electrodes **922** are also included in this embodiment of trocar **910**. Finally, the same trocar **910** also includes distally extending RF electrodes **923**. Radiofrequency ablation electrodes **921**, **922** and **923** are advanced in the directions of arrows **949**, **950** and **951**, respectively, during deployment of the electrode into target tissue.

[**0122**] In connection with the embodiment illustrated schematically in FIG. **22**, it is noted that stylets **921** may be deployed before stylets **922** and **923**, because they are facing in the direction opposite that of the trocar point **914** and will thus effectively act to anchor trocar **910**.

[**0123**] The provision of multiple electrodes extending in different directions, as schematically illustrated in FIG. **22** may be used to define the shapes of **8** various ablation volumes.

[**0124**] Further variations in ablation volume may be achieved by varying (for example, in accordance with the present invention by computer) the extent to which stylets **921-923** are extended from the distal end of trocar **910**.

[**0125**] This may be most easily understood with reference to FIGS. **23-30**. In this embodiment of the invention, trocar **910**, like the trocars illustrated in FIGS. **20-21**, include an insulative plastic cannula **916** which defines a plurality of passages for the wires which form stylets **922**. As shown in FIG. **23**, at the proximal end of the trocar, the wires corresponding to nine stylets **922** are arrayed in circumferential form, surrounding central axial member **909**, and within passages defined by cannula **916**.

[**0126**] Proceeding further downstream from the proximal end of trocar **910** toward the distal end of trocar **910**, deflection surfaces **912** appear. As stylets **922** are advanced, their pointed ends **924** advance against surfaces **912** and stylets **922** are deflected by surfaces **912**, as illustrated by stylet **922'** in FIG. **24**.

[**0127**] Proceeding further downstream, only six ablation electrodes **922** remain, as illustrated in FIG. **25**, on account of the exit of three electrodes at the position illustrated by the cross-section of FIG. **24**. Finally, proceeding further downstream, only three ablation electrodes are positioned in cannula **916**, as illustrated in FIG. **26**.

[**0128**] In accordance with the present invention greater degrees of bending may be achieved by variation of the path of the trocar ablation electrodes from the simple paths illustrated in solid lines in FIGS. **24-26**. More particularly, at the position illustrated in FIG. **25**, the ramp **912***a* may be configured to deflect ablation electrode **922** along a longer path within the deflection member which defines the deflection surfaces. The result is a deflected shape for electrode **922***a* illustrated in phantom lines in FIG. **25**. The same may be more easily understood with reference to FIG. **28**. Likewise, with reference to FIG. **26**, an even greater degree of the

Petitioner's Exhibit 1010
Avanos v. Stratus

rearward bend can be achieved, as illustrated in phantom lines in FIG. **26**, and in FIG. **29** by deflection by ramp surface **912***b*.

[**0129**] As noted above, variations in ablation volume may be achieved by varying the extent to which stylets are extended from the distal end of the trocar and the direction in which stylets extend. Still yet additional variation may be obtained by control the extension of stylets as a function of time to achieve the desired amount of tissue ablation. Such control may be achieved using electromechanical systems under the control of a microprocessor or other computing device, such as a personal computer.

[**0130**] Still yet another method of controlling the ablation volume after the introduction of the distal end of the trocar into the proximity of the tissue to be ablated is the extension of stylets as described above, followed by the retraction of the stylets, followed by rotation of the trocar about its axis, followed by again extending stylets as described above, followed by again retracting the stylets, and so forth until the desired ablation volume has been ablated. It is noted that in accordance with the invention, this may be done in conjunction with power control, time control, extension control and the other techniques described herein. Such rotation may be done manually by the physician, or may be automatically done by the device. Such automatic rotation and other control of stylet deployment may be done in accordance with a predetermined sequence, and/or in response to measured conditions in the tissue to be ablated, such as the measurement of temperature, resistance and so forth, and/or artificial intelligence analysis of image information. Moreover, such control may be done by direct mechanical controls, for example using position transducers to determine the a movement of stylets and angular inertial detectors to determine trocar rotation. Alternatively, imaging and feedback control may be employed.

[**0131**] The wide range of flexibility of the inventive system may be understood with reference to FIG. **30**. By way of example, trocar **1010** may initially be used to perform ablation with stylets **1022** deployed in the position as illustrated in solid lines. Electrodes **1022** would then be activated, resulting in ablation of volumes **1052** and **1054**. After a period of time stylets **1022** may be withdrawn to the positions illustrated in dashed lines. Continued application of RF energy by the stylets will then ablate the remaining portion of volume **1056**. Following this procedure, a relatively uniform heating of the tissue to be ablated can be achieved.

[**0132**] In accordance with the present invention it is recognized that the tissue of the uterus is relatively fragile and that its walls are relatively thin. Accordingly, tissue damage may impair uterus functionality during pregnancy and increase the likelihood of a loss of a pregnancy. Accordingly, a trocar structure which minimizes the size of the hole made by the trocar when it is being deployed into the body would result in significant advantages. Such an embodiment is illustrated in FIGS. **31-40**.

[**0133**] Generally, trocar **1110** comprises a delivery surface **1112** (FIG. **40**) built integrally with a trocar point **1114**. Trocar **1110** comprises a plastic insulative sleeve forming a cannula **1116**. Pins **1158** secure cannula **1116** to point **1114**. Point **1114** include surfaces **1112** for guiding stylets **1122** into the tissue surrounding deployed ablation trocar **1110**. As shown in FIG. **33**, the wires which form stylets **1122** extend substantially the length of the trocar and is of minimal size for the number of stylets/anchors to be deployed. It is also noted that the wires which form stylets **1122** may be viewed as anchors, depending upon the angle at which they exit the delivery surface **1112** of point **1114**.

[**0134**] Proceeding further downstream from the proximal to the distal end, the wires which form stylets **1122** fit into a metal or plastic superstructure associated with point **1114**. Proceeding further downstream the outer surface of the catheter, previously formed by cannula **1116**, is instead formed by point **1114**. In the view illustrated in FIG. **36**, several of the stylets **1122** are illustrated in a deployed position. In connection with this, it is noted that, by way of example, only three of the stylets need be deployed at this point in the trocar.

[**0135**] However, proceeding further downstream toward the distal end of the trocar **1110**, as illustrated in FIG. **37**, another three stylets may be deployed. Next, as illustrated in FIG. **38**, proceeding further downstream another three stylets **1122** may be deployed, leaving behind three remaining stylets/anchors. In connection with this, it is noted that the only difference in this embodiment between a stylet and an anchor is the fact that radiofrequency energy is applied to a stylet, whereas an anchor may be left in place without the application of energy. In connection with this, it is noted that an anchor to which radiofrequency energy is applied will, in addition to performing its anchoring function act as a tissue ablation electrode.

[**0136**] Finally, as illustrated in FIG. **39**, three stylets **1122** may be deployed as illustrated in FIG. **39** and FIG. **40**. In connection with this embodiment, it is noted that these last three stylets may serve the function of also being anchors because they are advanced in the direction of arrow **1150** and thus will tend to drive trocar point **1114** forward in the direction of arrow **1126**.

[**0137**] An even more efficient use of the width of the trocar is illustrated in FIGS. **41-44**. In this embodiment trocar **1210** utilizes a cannula **1216** which is completely filled with stylets **1222**. FIG. **41** illustrates the trocar **1210** at a point relatively close to the proximal end of the trocar. Two of the stylets, namely stylets **1223**, act as anchors. The remaining stylets may be deployed as illustrated in FIG. **42**. Thereafter proceeding further downstream, toward the distal end of the trocar, the two anchors **1223** may be deployed as illustrated in FIGS. **43** and **44**.

[**0138**] Moreover, in accordance to present invention, other sizes and shapes of stylets may be used. For example, as illustrated in FIG. **45**, a trocar **1310** may include square cross-section stylets **1322** and flat stylets **1323**. Similarly, irregular shapes may be employed as illustrated in FIG. **46**. Moreover, stylets may include stylets made of different materials such as materials of different conductivity. For example, anchors **1423** and stylets **1422** may be made of one material while stylets **1421** may be made of another material, perhaps having a different conductivity, flexibility, and so forth.

[**0139**] Turning to FIG. **47**, a trocar **1510** includes a point **1514** which defines a first bending surface **1511** and a second bending surface **1512** which deflect stylets **1522**, but which define voids **1523** and **1525**, adjacent surfaces **1527** of the

Petitioner's Exhibit 1010
Avanos v. Stratus

stylets **1522** which have no mechanical members bearing against them. This has the result of achieving low friction deflection. Generally, it is contemplated, in accordance with one possible way of implementing the invention, that friction is to be minimized by making the stylet only as thick as is necessary, for a material of the particular resiliency of the material used, to allow the stylet to be advanced through the target tissue. This results in the application of minimal force to the stylet by the deflecting members, thus reducing friction.

[**0140**] At the same time, the surfaces doing the deflecting are not a single continuous surface. Rather, two (and optionally more) deflection surfaces are positioned to deflect the stylet while at the same time relying on the natural tendency of the springy metal of which the stylet is made, to assume a particular radius. This takes advantage of in the inventive concept of deflecting the stylet without the need for having a substantially continuous surface in contact with the stylet.

[**0141**] Point **1614** may be driven during trocar withdrawal by a relatively high RF signal to couterize the entry wound.

[**0142**] Referring to FIG. **48-50**, an alternative design for a trocar **1610** in accordance with the invention is illustrated. Deflection surfaces **1612** are defined in a trocar point **1614** and provide for the deflection of stylets **1622**. Trocar point **1614** is secured to a hypotube **1615**. The outside surface **1617** of hypotube **1615** is coated with an insulative material. Hypotube **1615** is made of metal in accordance with the preferred embodiment on account of the strength of metal having the relatively small dimensions required by the inventive trocar. While other materials may be used, presently it is preferred, in the subject embodiment and the other embodiments illustrated in the application, that the inventive trocar incorporate cannulas made of metal.

[**0143**] Hypotube **1615** houses a plurality of metal members whose ends form stylets **1622**.

[**0144**] Hypotube **1615** is slidably mounted within a second cannula or hypotube **1619** whose outside surface **1621** is also coated with an insulative material. Hypotube **1619** is also preferably made of metal on account of the stiffness and strength of the metal.

[**0145**] Hypotube **1619** is rigidly secured to deflection member **1638**. Deflection member **1638** includes a deflection surface **1639** and a counter surface **1640** between which anchor members **1641** are deflected. More particularly, when deflection member **1638** moves in the direction of arrow **40** with respect to hypotube **1615**, it causes anchors **1641** to be deflected from a straight orientation parallel to the axis of trocar **1610** (similar to the position of anchors **34** in FIG. **3**) to the position illustrated in FIGS. **48** and **49**.

[**0146**] Relative motion of the two hypotubes is achieved by use of a handle **1651** incorporating a first slider member **1653** coupled to hypotube **1615**, and a second slidably mounted member **1655** coupled to hypotube **1619**. Hypotubes **1615** and **1619** are slidably mounted within handle **1651** and are rigidly coupled to slider members **1653** and **1655**, respectively, thus providing for movement of these members at the ablation end of trocar **1610** illustrated in FIGS. **48** and **49**. Power to the stylets **1622** is provided by any suitable source coupled to connector **1655**.

[**0147**] If desired, an insulative member in **1657** may be provided to ensure electrical isolation between trocar point **1614** and deflection member **1638**.

[**0148**] Yet another alternative embodiment of the invention is illustrated and FIG. **51**. In this embodiment, a trocar **1710** including a plurality of deflection surfaces **1712** defined in a trocar point **1714** and countersurfaces **1711** on member **1738**. Deflection of anchors in **1741** is performed by a slidably mounted Teflon member **1737**, mounted on a hypotube which may be drawn away from the handle at the distal end of trocar **1710** to deploy anchors **1741** as illustrated in FIG. **51**.

[**0149**] While illustrative embodiments of the invention have been described, it is, of course, understood that various modifications will be obvious to those of ordinary skill in the art in view of the teachings of this specification. Such modifications are within the spirit and scope of the invention as limited and defined only by the appended claims.

[**0150**] While the inventive device has been illustrated for use in the ablation of uterine fibroids, it is understood that this particular implementation is exemplary and that the inventive device may be employed in a wide variety of circumstances.

1. An ablation element, comprising:

(a) an elongated cannula having a proximal end and a distal end, said cannula defining an internal lumen within said cannula and a cannula axis;

(b) a plurality of conductors contained within said lumen, each of said conductors having a proximal end proximate the proximal end of said cannula, and a distal end proximate the distal end of said cannula;

(c) a plurality of ablation stylets each having a proximal end and a distal end, and each coupled at the respective proximal end of said stylet to the distal end of a respective conductor, said stylets comprising a deflectable material, said conductors together with their respective stylets being mounted for axial movement;

(d) a trocar point defined proximate the distal end of said cannula; and

(e) a deflection surface positioned between said trocar point and said proximal end of said cannula, the deflection surface being configured and positioned to deflect, in response to axial movement of said stylets in a direction from said proximate end of said cannula to said distal end of said cannula, at least some of said stylets laterally with respect to said cannula axis in different directions along substantially straight paths, said paths defining an ablation volume.

2. An ablation element as in claim 1, wherein said conductor is selected from the group consisting of electrical conductors, radio frequency conductors, microwave conductors and optical conductors.

3. An ablation element as in claim 1, wherein each of said conductors are integral with its respective ablation stylet.

4. An ablation element as in claim 1, wherein the solid contents of said lumen consist essentially of said conductors.

5. An ablation element as in claim 1, wherein each of said stylets are configured to assume a substantially straight configuration in the absence of external forces.

6. An ablation element as in claim 1, further comprising:

(f) a motor member or members coupled to said conductors to drive axial movement of said stylets in directions from said proximal end of said cannula to said

Petitioner's Exhibit 1010
Avanos v. Stratus

distal end of said cannula, and from said distal end of said cannula to said proximal end of said cannula through a plurality of positions.

7. An ablation element as in claim 1, wherein said trocar point is defined at the distal end of a trocar member, said trocar member having an outside surface, said cannula having an outside surface, said trocar member having a proximal end secured proximate to the distal end of said elongated cannula, and the outside surface of said cannula and the outside surface of said trocar point defining a trocar surface.

8. An ablation element as in claim 7, wherein said deflection surface comprises a number of ramps defined proximate the proximal end of said trocar point, the distal ends of said stylets being posiitonable proximate to said ramps and within said trocar surface.

9. An ablation element as in claim 8, wherein said conductors are electrical conductors, said stylets are electrical conductors, and each of said stylets are configured to assume a substantially straight configuration in the absence of external forces.

10. An ablation element as in claim 9, wherein said deflection surface comprises a plurality of channels guiding said distal ends of said stylets to said ramps.

11. An ablation element as in claim 9, wherein said cannula is secured to said trocar member with the outside surface of said cannula proximate to the outside surface of said trocar member.

12. An ablation element as in claim 1, further comprising:

(f) an anchor mounted for movement between an internal position disposed within said trocar surface and an anchoring position extending laterally from said trocar surface through points external of said lumen; and

(g) a drive member disposed within said lumen and coupled to said anchor to drive said anchor between said internal position and said anchoring position.

13. An ablation element as in claim 9, wherein said anchor comprises at least two pointed members mounted for movement in directions which have vector components which extend away from the axis or said cannula and away from each other.

14. An ablation element as in claim 13, wherein said pointed members extend in a direction with vector component that extends in a direction opposite to the direction in which said trocar point extends.

15. An ablation element as in claim 1, wherein said conductors bear against each other at least along a portion of their length within said cannula.

16. An ablation element, comprising:

(a) an elongated cannula having a proximal end and a distal end, said cannula defining an internal lumen within said cannula and a cannula axis;

(b) a plurality of conductors contained within said lumen, each of said conductors having a proximal end proximate the proximal end of said cannula, and a distal end proximate the distal end of said cannula;

(c) a plurality of ablation stylets each having a proximal end and a distal end, and each coupled at the respective proximal end of said stylet to the distal end of a respective conductor, said stylets comprising a deflectable material, said conductors together with their respective stylets being mounted for axial movement;

(d) a front end defined proximate the distal end of said cannula; and

(e) a deflection surface positioned between said front end and said proximal end of said cannula, the deflection surface being configured and positioned to deflect, in response to axial movement of said stylets in a direction from said proximate end of said cannula to said distal end of said cannula, at least some of said stylets laterally with respect to said cannula axis in different directions along substantially straight paths, said paths defining an ablation volume.

17. An ablation element as in claim 16, wherein said conductors bear against each other at least along a portion of their length within said cannula.

18. An ablation element as in claim 16, wherein said conductors are driven by a drive mechanism which allows said conductors to move independently.

19. An ablation element as in claim 16, wherein said conductors have a length, a width and a thickness, said width being greater than said thickness.

20. An ablation element as in claim 16, wherein said conductors terminate in a point oriented to allow deflection by said deflection surface.

21. An ablation element as in claim 16, wherein said conductors extend in different directions when they exit the deflection surface and extend to a variable extent.

22. An ablation element as in claim 16, wherein said conductors are driven by a drive circuit which varies the amount of energy supplied to the stylets and/or the length of the stylets and/or the length of the time during which power is supplied to the stylets and/or the angular orientation of the ablation element.

23. An ablation element as in claim 22, wherein the parameters of stylet length, stylet power, stylet actuation time and/or angular orientation are controlled by a computer in response to a computer program having an input comprising feedback information from the tissue area being operated on and/or a preset program.

24. An ablation element as in claim 16, wherein a stylet is advanced along a path first extending away from the deployment path and next extending in a direction along the direction of deployment.

25. An ablation element as in claim 16, wherein one of the ablation stylets is oriented to allow removal of the ablation elements of the stylet deployed to allow cauterization of the wound created by deployment of the ablation element.

26. An ablation element, comprising:

(a) an elongated cannula having a proximal end and a distal end, said cannula defining an internal lumen within said cannula and a cannula axis;

(b) a plurality of conductors contained within said lumen, each of said conductors having a proximal end proximate the proximal end of said cannula, and a distal end proximate the distal end of said cannula;

(c) a plurality of ablation stylets each having a proximal end and a distal end, and each coupled at the respective proximal end of said stylet to the distal end of a respective conductor, said stylets comprising a deflectable material, said conductors together with their respective stylets being mounted for axial movement;

(d) a front end defined proximate the distal end of said cannula;

(e) an anchor mounted for movement between an internal position disposed within said trocar surface and an anchoring position extending laterally from said trocar surface through points external of said lumen; and

(f) a drive member disposed within said lumen and coupled to said anchor to drive said anchor between said internal position and said anchoring position, wherein said anchor comprises at least two pointed members mounted for movement in directions which have vector components which extend away from the axis or said cannula and away from each other.

27. An ablation element as in claim 26, wherein said front end is a trocar point defined at the distal end of a trocar member, said trocar member having an outside surface, said cannula having an outside surface, said trocar member having a proximal end secured proximate to the distal end of said elongated cannula, and the outside surface of said cannula and the outside surface of said trocar point defining a trocar surface.

28. An ablation element as in claim 27, wherein said trocar member bears a deflection surface, said deflection surface comprising a number of ramps defined proximate the proximal end of said trocar point, the distal ends of said stylets being posiitonable proximate to said ramps and within said trocar surface.

29. An ablation element as in claim 26, wherein said anchors extend in directions which have vector components which extend away from the distal end of said of ablation element.

30. An ablation element as in claim 26, wherein said anchors are deployed in response to rotary motion.

31. An ablation element as in claim 26, wherein said anchors are deployed by bearing against a deflection surface.

32. An ablation element as in claim 26, wherein said anchors are made of a springy material which assumes a curved configuration when not subjected to external forces.

33. An ablation element, comprising:

(h) an elongated cannula having a proximal end and a distal end, said cannula defining an internal lumen within said cannula and a cannula axis;

(i) a plurality of conductors contained within said lumen, each of said conductors having a proximal end proximate the proximal end of said cannula, and a distal end proximate the distal end of said cannula;

(j) a plurality of ablation stylets each having a proximal end and a distal end, and each coupled at the respective proximal end of said stylet to the distal end of a respective conductor, said stylets comprising a deflectable material, said conductors together with their respective stylets being mounted for axial movement;

(k) a head member defined proximate the distal end of said cannula; and

a deflection surface comprising a bending surface and a countersurface, positioned between said head member and said proximal end of said cannula, the deflection surface being configured and positioned to deflect, in response to axial movement of said stylets in a direction from said proximate end of said cannula to said distal end of said cannula, at least some of said stylets laterally with respect to said cannula axis in different directions along substantially straight paths, said paths defining an ablation volume, said bending surface and said countersurface defining void space therebetween, whereby a portion of said stylets deformed into a curved configuration are not in contact with said deflection surface.

* * * * *