PTO/AIA/50 (10-17)
Approved for use through 03/31/2026. OMB 0651-0033
U.S. Patent and Trademark Office; U.S. DEPARTMENT OF COMMERCE
Under the Paperwork Reduction Act of 1995 no persons are required to respond to a collection of information unless it displays a valid OMB control number.

REISSUE PATENT APPLICATION TRANSMITTAL

Address to:

Mail Stop Reissue
Commissioner for Patents
P.O. Box 1450
Alexandria, VA 22313-1450

Attorney Docket No.	NBUS.001C1RE1
First Named Inventor	Robert E. Wright
Original Patent Number	10,736,688
Original Patent Issue Date (Month/Day/Year)	08/11/2020
Priority Mail Express® Label No.	

APPLICATION FOR REISSUE OF:
(***Check applicable box***) ☑ Utility Patent ☐ Design Patent ☐ Plant Patent

APPLICATION ELEMENTS (37 CFR 1.173)

1. ☐ **Fee Transmittal Form** (PTO/SB/56)
2. ☑ **Applicant asserts small entity status.** See 37 CFR 1.27
3. ☐ **Applicant certifies micro entity status.** See 37 CFR 1.29. Applicant must attach form PTO/SB/15A or B or equivalent.
4. ☑ **Specification and Claims** in double column copy of patent format (*amended, if appropriate*)
5. ☑ **Drawing(s)** (*proposed amendments, if appropriate*)
6. ☑ **Reissue Oath/Declaration or Substitute Statement** (37 CFR 1.175) (PTO/AIA/05, 06, or 07)
7. ☑ **Application Data Sheet** **NOTE:** Benefit claims under 37 CFR 1.78 and foreign priority claims under 37 CFR 1.55 MUST be set forth in an Application Data Sheet (ADS).
8. ☑ **Original U.S. Patent currently assigned?** ☑ Yes ☐ No (*If Yes, check applicable box(es)*)
   - ☑ Written Consent of all Assigness (PTO/AIA/53)
   - ☑ 37 CFR 3.73(c) Statement (PTO/AIA/96)
9. ☐ **CD-ROM or CD-R** in duplicate, Computer Program (*Appendix*) or large table
   - ☐ Landscape Table on CD
10. **Nucleotide and/or Amino Acid Sequence Submission** (*if applicable, items a. – c. are required*)
    - a. ☐ Computer Readable Form (CRF)
    - b. ☐ Specification Sequence Listing on:
      - i. ☐ CD-ROM (2 copies) or CD-R (2 copies); **or**
      - ii. ☐ Paper
    - c. ☐ Statements verifying identity of above copies

ACCOMPANYING APPLICATION PARTS

11. ☑ **Statement of status and support for all changes to the claims.** See 37 CFR 1.173(c).
12. ☑ **Power of Attorney**
13. ☐ **Information Disclosure Statement (IDS)** PTOSB/08 or PTO-1449
    - ☐ Copies of citations attached
14. ☐ **English translation of Reissue Oath/Declaration** (*if applicable*)
15. ☐ **Return Receipt Postcard** (MPEP § 503) (Should be specifically itemized)
16. ☑ **Preliminary Amendment** (37 CFR 1.173; MPEP § 1453)
17. ☐ **Other:** _____

☐ This is a continuation reissue or divisional reissue application (*i.e.*, a second or subsequent reissue application for the same issued patent). (*Check box if applicable.*)

18. CORRESPONDENCE ADDRESS

☑ The address associated with Customer Number: 148468 **OR** ☐ Correspondence address below

Name					
Address					
City		State		Zip Code	
Country		Telephone			
Email					

Signature	/ M.C. Phillips /	Date	2026 April 30
Name (Print/Type)	Matthew C. Phillips	Registration No.	43,403

A Federal agency may not conduct or sponsor, and a person is not required to respond to, nor shall a person be subject to a penalty for failure to comply with an information collection subject to the requirements of the Paperwork Reduction Act of 1995, unless the information collection has a currently valid OMB Control Number. The OMB Control Number for this information collection is 0651-0033. Public burden for this form is estimated to average 30 minutes per response, including the time for reviewing instructions, searching existing data sources, gathering and maintaining the data needed, and completing and reviewing the information collection. Send comments regarding this burden estimate or any other aspect of this information collection, including suggestions for reducing this burden to the Chief Administrative Officer, United States Patent and Trademark Office, P.O. Box 1450, Alexandria, VA 22313-1450 or email InformationCollection@uspto.gov. DO NOT SEND FEES OR COMPLETED FORMS TO THIS ADDRESS. If filing this completed form by mail, send to: **Commissioner for Patents, P.O. Box 1450, Alexandria, VA 22313-1450.**

If you need assistance in completing the form, call 1-800-PTO-9199 and select option 2.

PTO/AIA/14 (03-26)
Approved for use through 11/30/2027. OMB 0651-0032
U.S. Patent and Trademark Office; U.S. DEPARTMENT OF COMMERCE

Under the Paperwork Reduction Act of 1995, no persons are required to respond to a collection of information unless it contains a valid OMB control number.

Application Data Sheet 37 CFR 1.76	Attorney Docket Number	NBUS.001C1RE1
	Application Number	

Title of Invention	METHODS AND SYSTEMS FOR SPINAL RADIO FREQUENCY NEUROTOMY

The application data sheet is part of the provisional or nonprovisional application for which it is being submitted. The following form contains the bibliographic data arranged in a format specified by the United States Patent and Trademark Office as outlined in 37 CFR 1.76.
This document may be completed electronically and submitted to the Office in electronic format using the Electronic Filing System (EFS) or the document may be printed and included in a paper filed application.

Secrecy Order 37 CFR 5.2:

☐ Portions or all of the application associated with this Application Data Sheet may fall under a Secrecy Order pursuant to 37 CFR 5.2 (Paper filers only. Applications that fall under Secrecy Order may not be filed electronically.)

Inventor Information:

Inventor 1 Remove

Legal Name

Prefix	Given Name	Middle Name	Family Name	Suffix
	Robert	E.	Wright	

Residence Information (Select One) ○ US Residency ◉ Non US Residency ○ Active US Military Service

City	Sippy Downs	Country of Residence	AU

Mailing Address of Inventor:

Address 1	Suite 3, Floor 2, 1 Courage Street		
Address 2			
City	Sippy Downs	**State/Province**	
Postal Code	4556	**Country**	AU

Inventor 2 Remove

Legal Name

Prefix	Given Name	Middle Name	Family Name	Suffix
	Scott	A.	Brandt	

Residence Information (Select One) ◉ US Residency ○ Non US Residency ○ Active US Military Service

City	Denver	State/Province	CO	Country of Residence	US

Mailing Address of Inventor:

Address 1	7400 E. Caley Ave., #150		
Address 2			
City	Centennial	**State/Province**	CO
Postal Code	80111	**Country**	US

All Inventors Must Be Listed - Additional Inventor Information blocks may be generated within this form by selecting the **Add** button. Add

Correspondence Information:

Under the Paperwork Reduction Act of 1995, no persons are required to respond to a collection of information unless it contains a valid OMB control number.

Application Data Sheet 37 CFR 1.76	Attorney Docket Number	NBUS.001C1RE1
	Application Number	
Title of Invention	METHODS AND SYSTEMS FOR SPINAL RADIO FREQUENCY NEUROTOMY	

Enter either Customer Number or complete the Correspondence Information section below.
For further information see 37 CFR 1.33(a).

☐ **An Address is being provided for the correspondence Information of this application.**

Customer Number	148468		
Email Address	docket@lpiplaw.com	Add Email	Remove Email
Email Address	mphillips@lpiplaw.com	Add Email	Remove Email

Application Information:

Title of the Invention	METHODS AND SYSTEMS FOR SPINAL RADIO FREQUENCY NEUROTOMY		
Attorney Docket Number	NBUS.001C1RE1	**Small Entity Status Claimed**	☒
Application Type	Nonprovisional		
Subject Matter	Utility		
Total Number of Drawing Sheets (if any)	19	**Suggested Figure for Publication (if any)**	2A

Filing By Reference:

Only complete this section when filing an application by reference under 35 U.S.C. 111(c) and 37 CFR 1.57(a). Do not complete this section if application papers including a specification and any drawings are being filed. Any domestic benefit or foreign priority information must be provided in the appropriate section(s) below (i.e., "Domestic Benefit/National Stage Information" and "Foreign Priority Information").

For the purposes of a filing date under 37 CFR 1.53(b), the description and any drawings of the present application are replaced by this reference to the previously filed application, subject to conditions and requirements of 37 CFR 1.57(a).

Application number of the previously filed application	Filing date (YYYY-MM-DD)	Intellectual Property Authority or Country

Publication Information:

☐ Request Early Publication (Fee required at time of Request 37 CFR 1.219)

☐ **Request Not to Publish.** I hereby request that the attached application not be published under 35 U.S.C. 122(b) and certify that the invention disclosed in the attached application **has not and will not** be the subject of an application filed in another country, or under a multilateral international agreement, that requires publication at eighteen months after filing.

Representative Information:

Representative information should be provided for all practitioners having a power of attorney in the application. Providing this information in the Application Data Sheet does not constitute a power of attorney in the application (see 37 CFR 1.32).
Either enter Customer Number or complete the Representative Name section below. If both sections are completed the customer Number will be used for the Representative Information during processing.

Please Select One:	◉ Customer Number	○ US Patent Practitioner	○ Limited Recognition (37 CFR 11.9)

Under the Paperwork Reduction Act of 1995, no persons are required to respond to a collection of information unless it contains a valid OMB control number.

Application Data Sheet 37 CFR 1.76	Attorney Docket Number	NBUS.001C1RE1
	Application Number	

Title of Invention	METHODS AND SYSTEMS FOR SPINAL RADIO FREQUENCY NEUROTOMY

Customer Number	148468

Domestic Benefit/National Stage Information:

This section allows for the applicant to either claim benefit under 35 U.S.C. 119(e), 120, 121, 365(c), or 386(c) or indicate National Stage entry from a PCT application. Providing benefit claim information in the Application Data Sheet constitutes the specific reference required by 35 U.S.C. 119(e) or 120, and 37 CFR 1.78.
When referring to the current application, please leave the "Application Number" field blank.

Prior Application Status	Patented				Remove
Application Number	Continuity Type	Prior Application Number	Filing Date (YYYY-MM-DD)	Patent Number	Issue Date (YYYY-MM-DD)
	reissued of	15/098673	2016-04-14	10736688	2020-08-11

Prior Application Status	Abandoned		Remove
Application Number	Continuity Type	Prior Application Number	Filing or 371(c) Date (YYYY-MM-DD)
15/098673	Continuation of	12/940974	2010-11-05

Prior Application Status	Expired		Remove
Application Number	Continuity Type	Prior Application Number	Filing or 371(c) Date (YYYY-MM-DD)
12/940974	Claims benefit of provisional	61/347351	2010-05-21

Prior Application Status	Expired		Remove
Application Number	Continuity Type	Prior Application Number	Filing or 371(c) Date (YYYY-MM-DD)
12/940974	Claims benefit of provisional	61/280557	2009-11-05

Additional Domestic Benefit/National Stage Data may be generated within this form by selecting the **Add** button. Add

Foreign Priority Information:

This section allows for the applicant to claim priority to a foreign application. Providing this information in the application data sheet constitutes the claim for priority as required by 35 U.S.C. 119(b) and 37 CFR 1.55. When priority is claimed to a foreign application that is eligible for retrieval under the priority document exchange program (PDX)[i] the information will be used by the Office to automatically attempt retrieval pursuant to 37 CFR 1.55(i)(1) and (2). Under the PDX program, applicant bears the ultimate responsibility for ensuring that a copy of the foreign application is received by the Office from the participating foreign intellectual property office, or a certified copy of the foreign priority application is filed, within the time period specified in 37 CFR 1.55(g)(1).

Remove

Application Number	Country[i]	Filing Date (YYYY-MM-DD)	Access Code[i] (if applicable)

Under the Paperwork Reduction Act of 1995, no persons are required to respond to a collection of information unless it contains a valid OMB control number.

Application Data Sheet 37 CFR 1.76	Attorney Docket Number	NBUS.001C1RE1
	Application Number	
Title of Invention	METHODS AND SYSTEMS FOR SPINAL RADIO FREQUENCY NEUROTOMY	

Additional Foreign Priority Data may be generated within this form by selecting the **Add** button. Add

Statement under 37 CFR 1.55 or 1.78 for AIA (First Inventor to File) Transition Applications

☐ This application (1) claims priority to or the benefit of an application filed before March 16, 2013 and (2) also contains, or contained at any time, a claim to a claimed invention that has an effective filing date on or after March 16, 2013.
NOTE: By providing this statement under 37 CFR 1.55 or 1.78, this application, with a filing date on or after March 16, 2013, will be examined under the first inventor to file provisions of the AIA.

Application Data Sheet 37 CFR 1.76	Attorney Docket Number	NBUS.001C1RE1
	Application Number	
Title of Invention	METHODS AND SYSTEMS FOR SPINAL RADIO FREQUENCY NEUROTOMY	

Authorization or Opt-Out of Authorization to Permit Access:

When this Application Data Sheet is properly signed and filed with the application, applicant has provided written authority to permit a participating foreign intellectual property (IP) office access to the instant application-as-filed (see paragraph A in subsection 1 below) and the European Patent Office (EPO) access to any search results from the instant application (see paragraph B in subsection 1 below).

Should applicant choose not to provide an authorization identified in subsection 1 below, applicant **must opt-out** of the authorization by checking the corresponding box A or B or both in subsection 2 below.

NOTE: This section of the Application Data Sheet is **ONLY** reviewed and processed with the **INITIAL** filing of an application. After the initial filing of an application, an Application Data Sheet cannot be used to provide or rescind authorization for access by a foreign IP office(s). Instead, Form PTO/SB/39 or PTO/SB/69 must be used as appropriate.

1. Authorization to Permit Access by a Foreign Intellectual Property Office(s)

A. Priority Document Exchange (PDX) - Unless box A in subsection 2 (opt-out of authorization) is checked, the undersigned hereby **grants the USPTO authority** to provide any foreign intellectual property office participating with the USPTO in a bilateral or multilateral priority document exchange agreement in which a foreign application claiming priority to the instant patent application is filed, access to: (1) the instant patent application-as-filed and its related bibliographic data, (2) any foreign or domestic application to which priority or benefit is claimed by the instant application and its related bibliographic data, and (3) the date of filing of this Authorization. See 37 CFR 1.14(h)(1).

B. Search Results from U.S. Application to EPO - Unless box B in subsection 2 (opt-out of authorization) is checked, the undersigned hereby **grants the USPTO authority** to provide the EPO access to the bibliographic data and search results from the instant patent application when a European patent application claiming priority to the instant patent application is filed. See 37 CFR 1.14(h)(2).

The applicant is reminded that the EPO's Rule 141(1) EPC (European Patent Convention) requires applicants to submit a copy of search results from the instant application without delay in a European patent application that claims priority to the instant application.

2. Opt-Out of Authorizations to Permit Access by a Foreign Intellectual Property Office(s)

☐ A. Applicant **DOES NOT** authorize the USPTO to permit a participating foreign IP office access to the instant application-as-filed. If this box is checked, the USPTO will not be providing a participating foreign IP office with any documents and information identified in subsection 1A above.

☐ B. Applicant **DOES NOT** authorize the USPTO to transmit to the EPO any search results from the instant patent application. If this box is checked, the USPTO will not be providing the EPO with search results from the instant application.

NOTE: Once the application has published or is otherwise publicly available, the USPTO may provide access to the application in accordance with 37 CFR 1.14.

Under the Paperwork Reduction Act of 1995, no persons are required to respond to a collection of information unless it contains a valid OMB control number.

Application Data Sheet 37 CFR 1.76	Attorney Docket Number	NBUS.001C1RE1
	Application Number	
Title of Invention	METHODS AND SYSTEMS FOR SPINAL RADIO FREQUENCY NEUROTOMY	

Applicant Information:

Providing assignment information in this section does not substitute for compliance with any requirement of part 3 of Title 37 of CFR to have an assignment recorded by the Office.

Applicant 1 Remove

If the applicant is the inventor (or the remaining joint inventor or inventors under 37 CFR 1.45), this section should not be completed. The information to be provided in this section is the name and address of the legal representative who is the applicant under 37 CFR 1.43; or the name and address of the assignee, person to whom the inventor is under an obligation to assign the invention, or person who otherwise shows sufficient proprietary interest in the matter who is the applicant under 37 CFR 1.46. If the applicant is an applicant under 37 CFR 1.46 (assignee, person to whom the inventor is obligated to assign, or person who otherwise shows sufficient proprietary interest) together with one or more joint inventors, then the joint inventor or inventors who are also the applicant should be identified in this section. Clear

- (●) Assignee
- ( ) Legal Representative under 35 U.S.C. 117
- ( ) Joint Inventor
- ( ) Person to whom the inventor is obligated to assign.
- ( ) Person who shows sufficient proprietary interest

If applicant is the legal representative, indicate the authority to file the patent application, the inventor is:

Name of the Deceased or Legally Incapacitated Inventor:

If the Applicant is an Organization check here. [X]

Organization Name	Stratus Medical, LLC		
Mailing Address Information For Applicant:			
Address 1	32303 FM-2978		
Address 2			
City	Magnolia	**State/Province**	TX
Country	US	Postal Code	77354
Phone Number		Fax Number	
Email Address			

Additional Applicant Data may be generated within this form by selecting the Add button. Add

Assignee Information including Non-Applicant Assignee Information:

Providing assignment information in this section does not substitute for compliance with any requirement of part 3 of Title 37 of CFR to have an assignment recorded by the Office.

Under the Paperwork Reduction Act of 1995, no persons are required to respond to a collection of information unless it contains a valid OMB control number.

Application Data Sheet 37 CFR 1.76	Attorney Docket Number	NBUS.001C1RE1
	Application Number	
Title of Invention	METHODS AND SYSTEMS FOR SPINAL RADIO FREQUENCY NEUROTOMY	

Assignee 1

Complete this section if assignee information, including non-applicant assignee information, is desired to be included on the patent application publication. An assignee-applicant identified in the "Applicant Information" section will appear on the patent application publication as an applicant. For an assignee-applicant, complete this section only if identification as an assignee is also desired on the patent application publication.

Remove

If the Assignee or Non-Applicant Assignee is an Organization check here. ☒

Organization Name	Stratus Medical, LLC

Mailing Address Information For Assignee including Non-Applicant Assignee:

Address 1	32303 FM-2978		
Address 2			
City	Magnolia	**State/Province**	TX
Country i		Postal Code	77354
Phone Number		Fax Number	
Email Address			

Additional Assignee or Non-Applicant Assignee Data may be generated within this form by selecting the Add button. Add

Signature:

Remove

NOTE: This Application Data Sheet must be signed in accordance with 37 CFR 1.33(b). **However, if this Application Data Sheet is submitted with the INITIAL filing of the application and either box A or B is not checked in subsection 2 of the "Authorization or Opt-Out of Authorization to Permit Access" section, then this form must also be signed in accordance with 37 CFR 1.14(c).**

This Application Data Sheet **must** be signed by a patent practitioner if one or more of the applicants is a **juristic entity** (e.g., corporation or association). If the applicant is two or more joint inventors, this form must be signed by a patent practitioner, **all** joint inventors who are the applicant, or one or more joint inventor-applicants who have been given power of attorney (e.g., see USPTO Form PTO/AIA/81) on behalf of **all** joint inventor-applicants.

See 37 CFR 1.4(d) for the manner of making signatures and certifications.

Signature	/ M.C. Phillips /			Date (YYYY-MM-DD)	2026-04-30
First Name	Matthew	Last Name	Phillips	Registration Number	43,403

Additional Signature may be generated within this form by selecting the Add button. Add

Under the Paperwork Reduction Act of 1995, no persons are required to respond to a collection of information unless it contains a valid OMB control number.

Application Data Sheet 37 CFR 1.76	Attorney Docket Number	NBUS.001C1RE1
	Application Number	
Title of Invention	METHODS AND SYSTEMS FOR SPINAL RADIO FREQUENCY NEUROTOMY	

This collection of information is required by 37 CFR 1.76. The information is required to obtain or retain a benefit by the public which is to file (and by the USPTO to process) an application. Confidentiality is governed by 35 U.S.C. 122 and 37 CFR 1.14. This collection is estimated to take 23 minutes to complete, including gathering, preparing, and submitting the completed application data sheet form to the USPTO. Time will vary depending upon the individual case. Any comments on the amount of time you require to complete this form and/or suggestions for reducing this burden, should be sent to the Chief Information Officer, U.S. Patent and Trademark Office, U.S. Department of Commerce, P.O. Box 1450, Alexandria, VA 22313-1450. DO NOT SEND FEES OR COMPLETED FORMS TO THIS ADDRESS. **SEND TO: Commissioner for Patents, P.O. Box 1450, Alexandria, VA 22313-1450.**

PTO/AIA/06 (09-20)
Approved for use through 03/31/2026. OMB 0651-0033
U.S. Patent and Trademark Office; U.S. DEPARTMENT OF COMMERCE
Under the Paperwork Reduction Act of 1995, no persons are required to respond to a collection of information unless it displays a valid OMB control number.

REISSUE APPLICATION DECLARATION BY THE ASSIGNEE	Docket Number (optional) NBUS.001C1RE1

I hereby declare that:

The residence and mailing address of the inventor or joint inventors are stated below.

Name of the Assignee:

Stratus Medical, LLC

I am authorized to act on behalf of the assignee (if the assignee is a juristic entity).

The entire title to the patent identified below is vested in said assignee, or if there are multiple assignees/owners, all assignees/owners have executed a Reissue Application Declaration to account for the entire title of the patent identified below.

Inventor Robert E. Wright

Residence: City	State	Country
Sippy Downs	Queensland	AU

Mailing Address

Suite 3, Floor 2, 1 Courage Street

City	State	Zip	Country
Sippy Downs	Queensland	4556	AU

☑ Additional Inventors are named on separately numbered sheets attached hereto.

Patent Number 10,736,688	Patent Issue Date August 11, 2020

I believe said inventor(s) to be the original inventor or original joint inventors of the subject matter which is described and claimed in said patent, for which a reissue patent is sought on the invention titled:

METHODS AND SYSTEMS FOR SPINAL RADIO FREQUENCY NEUROTOMY

the specification of which

☑ is attached hereto.

☐ was filed on _____ as reissue application number _____.

The above-identified application was made or authorized to be made by me.

I hereby acknowledge that any willful false statement made in this declaration is punishable under 18 U.S.C. 1001 by fine or imprisonment of not more than five (5) years, or both.

I believe the original patent to be wholly or partly inoperative or invalid, for the reasons described below. (Check all boxes that apply.)

☐ by reason of a defective specification or drawing.

☐ by reason of the patentee claiming more or less than he had the right to claim in the patent.

☑ by reason of other errors.

A Federal agency may not conduct or sponsor, and a person is not required to respond to, nor shall a person be subject to a penalty for failure to comply with an information collection subject to the requirements of the Paperwork Reduction Act of 1995, unless the information collection has a currently valid OMB Control Number. The OMB Control Number for this information collection is 0651-0033. Public burden for this form is estimated to average 46 minutes per response, including the time for reviewing instructions, searching existing data sources, gathering and maintaining the data needed, and completing and reviewing the information collection. Send comments regarding this burden estimate or any other aspect of this information collection, including suggestions for reducing this burden to the Chief Administrative Officer, United States Patent and Trademark Office, P.O. Box 1450, Alexandria, VA 22313-1450 or email InformationCollection@uspto.gov. DO NOT SEND FEES OR COMPLETED FORMS TO THIS ADDRESS. **SEND TO: Commissioner for Patents, P.O. Box 1450, Alexandria, VA 22313-1450.**

If you need assistance in completing the form, call 1-800-PTO-9199 and select option 2.

Under the Paperwork Reduction Act of 1995, no persons are required to respond to a collection of information unless it displays a valid OMB control number.

REISSUE APPLICATION DECLARATION BY THE ASSIGNEE | Docket Number (Optional)

At least one error upon which reissue is based is described below. If the reissue is a broadening reissue, a claim that the application seeks to broaden must be identified and the box below must be checked:

Failure to include claims that recite one or more of the following: (1) Needle outer diameter less than or equal to 16 gauge, (2) a radio frequency (RF) neurotomy needle, and (3) a spinal RF neurotomy procedure to ablate a medial branch nerve.

[Attach additional sheets, if needed.]

☑ **The application for the original patent was filed under 37 CFR 1.46 by the assignee of the entire interest.**

I hereby appoint:

☑ Practitioners associated with Customer Number: 148468

OR

☐ Practitioner(s) named below:

Name	Registration Number

as my/our attorney(s) or agent(s) to prosecute the application identified above, and to transact all business in the United States Patent and Trademark Office connected therewith.

Correspondence Address: Direct all communications about the application to:

☑ The address associated with Customer Number: 148468

OR

☐ Firm or Individual Name					
Address					
City		State		Zip	
Country					
Telephone		Email			

WARNING:

Petitioner/applicant is cautioned to avoid submitting personal information in documents filed in a patent application that may contribute to identity theft. Personal information such as social security numbers, bank account numbers, or credit card numbers (other than a check or credit card authorization form PTO-2038 submitted for payment purposes) is never required by the USPTO to support a petition or an application. If this type of personal information is included in documents submitted to the USPTO, petitioners/applicants should consider redacting such personal information from the documents before submitting them to the USPTO. Petitioner/applicant is advised that the record of a patent application is available to the public after publication of the application (unless a non-publication request in compliance with 37 CFR 1.213(a) is made in the application) or issuance of a patent. Furthermore, the record from an abandoned application may also be available to the public if the application is referenced in a published application or an issued patent (see 37 CFR 1.14). Checks and credit card authorization forms PTO-2038 submitted for payment purposes are not retained in the application file and therefore are not publicly available.

Signature | Date (Optional) April 27, 2026

Legal name of person signing: Bret Boudousquie, CEO

Address of Assignee: 32303 FM-2978, Magnolia, TX 77354

PTO/AIA/53 (12-22)
Approved for use through 03/31/2026. OMB 0651-0033
U.S. Patent and Trademark Office; U.S. DEPARTMENT OF COMMERCE
Under the Paperwork Reduction Act of 1995, no persons are required to respond to a collection of information unless it displays a valid OMB control number.

REISSUE APPLICATION: CONSENT OF ASSIGNEE; STATEMENT OF NON-ASSIGNMENT	Docket Number (Optional) NBUS.001C1RE1

This is part of the application for a reissue patent based on the original patent identified below.

Name of Patentee(s)
Robert E. Wright, et al.

Patent Number	Date Patent Issued
10,736,688	08/11/2020

Title of Invention
METHODS AND SYSTEMS FOR SPINAL RADIO FREQUENCY NEUROTOMY

1. ☒ Filed herein is a statement under 37 CFR 3.73(c). (Form PTO/AIA/96)

2. ☐ Ownership of the patent is in the inventor(s), and no assignment of the patent is in effect.

One of boxes 1 or 2 above must be checked. If multiple assignees, complete this form for each assignee. If box 2 is checked, skip the next entry and go directly to "Name of Assignee."

The written consent of all assignees and inventors owning an undivided interest in the original patent is included in this application for reissue.

The assignee(s) owning an undivided interest in said original patent is/are
Stratus Medical, LLC
_____,
and the assignee(s) consents to the accompanying application for reissue.

Name of assignee (if assigned)/inventor (if not assigned)
Stratus Medical, LLC

Signature	Date
	April 27, 2026

Typed or printed name and title of person signing for assignee (if assigned)
Bret Boudousquie, CEO

A Federal agency may not conduct or sponsor, and a person is not required to respond to, nor shall a person be subject to a penalty for failure to comply with an information collection subject to the requirements of the Paperwork Reduction Act of 1995, unless the information collection has a currently valid OMB Control Number. The OMB Control Number for this information collection is 0651-0033. Public burden for this form is estimated to average 30 minutes per response, including the time for reviewing instructions, searching existing data sources, gathering and maintaining the data needed, and completing and reviewing the information collection. Send comments regarding this burden estimate or any other aspect of this information collection, including suggestions for reducing this burden to the Chief Administrative Officer, United States Patent and Trademark Office, P.O. Box 1450, Alexandria, VA 22313-1450 or email InformationCollection@uspto.gov. DO NOT SEND FEES OR COMPLETED FORMS TO THIS ADDRESS. If filing this completed form by mail, send to: Commissioner for Patents, P.O. Box 1450, Alexandria, VA 22313-1450.

If you need assistance in completing the form, call 1-800-PTO-9199 and select option 2.

PTO/AIA/80 (07-17)
Approved for use through 09/30/2025. OMB 0651-0035
U.S. Patent and Trademark Office; U.S. DEPARTMENT OF COMMERCE
Under the Paperwork Reduction Act of 1995, no person is required to respond to a collection of information unless it displays a valid OMB control number

POWER OF ATTORNEY TO PROSECUTE APPLICATIONS BEFORE THE USPTO

I hereby revoke all previous powers of attorney given in the application identified in the attached statement under 37 CFR 3.73(c).

I hereby appoint:

[X] Practitioners associated with Customer Number: 148468

OR

[ ] Practitioner(s) named below (if more than ten patent practitioners are to be named, then a customer number must be used):

Name	Registration Number	Name	Registration Number

As attorney(s) or agent(s) to represent the undersigned before the United States Patent and Trademark Office (USPTO) in connection with any and all patent applications assigned only to the undersigned according to the USPTO assignment records or assignment documents attached to this form in accordance with 37 CFR 3.73(c).

Please change the correspondence address for the application identified in the attached statement under 37 CFR 3.73(c) to:

[X] The address associated with Customer Number: 148468

OR

[ ]

Firm or individual name		
Address		
City	State	Zip
Country		
Telephone	Email	

Assignee name and address: Stratus Medical, LLC
32303 FM-2978
Magnolia, TX 77354

A copy of this form, together with a statement under 37 CFR 3.73(c) (Form PTO/AIA/96 or equivalent) is required to be filed in each application in which this form is used. The statement under 37 CFR 3.73(c) may be completed by one of the practitioners appointed in this form, and must identify the application in which this Power of Attorney is to be filed.

SIGNATURE of Assignee of Record

The individual whose signature and title is supplied below is authorized to act on behalf of the assignee.

Signature	Date April 27, 2026
Name Bret Boudousquie	Telephone 281-253-8863
Title CEO	

A Federal agency may not conduct or sponsor, and a person is not required to respond to, nor shall a person be subject to a penalty for failure to comply with an information collection subject to the requirements of the Paperwork Reduction Act of 1995, unless the information collection has a currently valid OMB Control Number. The OMB Control Number for this information collection is 0651-0035. Public burden for this form is estimated to average 30 minutes per response, including the time for reviewing instructions, searching existing data sources, gathering and maintaining the data needed, and completing and reviewing the information collection. Send comments regarding this burden estimate or any other aspect of this information collection, including suggestions for reducing this burden to the Chief Administrative Officer, United States Patent and Trademark Office, P.O. Box 1450, Alexandria, VA 22313-1450 or email InformationCollection@uspto.gov. **DO NOT SEND FEES OR COMPLETED FORMS TO THIS ADDRESS.** If filing this completed form by mail, send to: **Commissioner for Patents, P.O. Box 1450, Alexandria, VA 22313-1450.**

If you need assistance in completing the form, call 1-800-PTO-9199 and select option 2.

Under the Paperwork Reduction Act of 1995, no persons are required to respond to a collection of information unless it displays a valid OMB control number.

STATEMENT UNDER 37 CFR 3.73(c)

First Named Inventor/Patent Owner: Robert E. Wright

Application No./Patent No.: 10,736,688 Filed/Issue Date: 2020 August 11

Titled: METHODS AND SYSTEMS FOR SPINAL RADIO FREQUENCY NEUROTOMY

Stratus Medical, LLC, a limited liability company

(Name of Assignee) (Type of Assignee, e.g., corporation, partnership, university, government agency, etc.)

states that, for the patent application/patent identified above, it is (choose **one** of options 1, 2, 3 or 4 below):

1. ☑ The assignee of the entire right, title, and interest.

2. ☐ An assignee of less than the entire right, title, and interest (check applicable box):

☐ The extent (by percentage) of its ownership interest is _____%. Additional Statement(s) by the owners holding the balance of the interest must be submitted to account for 100% of the ownership interest.

☐ There are unspecified percentages of ownership. The other parties, including inventors, who together own the entire right, title and interest are:

Additional Statement(s) by the owner(s) holding the balance of the interest must be submitted to account for the entire right, title, and interest.

3. ☐ The assignee of an undivided interest in the entirety (a complete assignment from one of the joint inventors was made). The other parties, including inventors, who together own the entire right, title, and interest are:

Additional Statement(s) by the owner(s) holding the balance of the interest must be submitted to account for the entire right, title, and interest.

4. ☐ The recipient, via a court proceeding or the like (*e.g.*, bankruptcy, probate), of an undivided interest in the entirety (a complete transfer of ownership interest was made). The certified document(s) showing the transfer is attached.

The interest identified in option 1, 2 or 3 above (not option 4) is evidenced by either (choose **one** of options A or B below):

A. ☐ An assignment from the inventor(s) of the patent application/patent identified above. The assignment was recorded in the United States Patent and Trademark Office at Reel _____, Frame _____, or for which a copy thereof is attached*.

B. ☑ A chain of title from the inventor(s), of the patent application/patent identified above, to the current assignee as follows:

1. From: Robert E. Wright and Scott A. Brandt To: Nimbus Concepts, LLC

The document was recorded in the United States Patent and Trademark Office at Reel 39717, Frame 0072, or for which a copy thereof is attached*.

2. From: Nimbus Concepts, LLC To: Biomerics, LLC

The document was recorded in the United States Patent and Trademark Office at Reel 51813, Frame 0965, or for which a copy thereof is attached*.

A Federal agency may not conduct or sponsor, and a person is not required to respond to, nor shall a person be subject to a penalty for failure to comply with an information collection subject to the requirements of the Paperwork Reduction Act of 1995, unless the information collection has a currently valid OMB Control Number. The OMB Control Number for this information collection is 0651-0031. Public burden for this form is estimated to average 15 minutes per response, including the time for reviewing instructions, searching existing data sources, gathering and maintaining the data needed, and completing and reviewing the information collection. Send comments regarding this burden estimate or any other aspect of this information collection, including suggestions for reducing this burden to the Chief Administrative Officer, United States Patent and Trademark Office, P.O. Box 1450, Alexandria, VA 22313-1450 or email InformationCollection@uspto.gov. DO NOT SEND FEES OR COMPLETED FORMS TO THIS ADDRESS. **SEND TO: Commissioner for Patents, P.O. Box 1450, Alexandria, VA 22313-1450.**

If you need assistance in completing the form, call 1-800-PTO-9199 and select option 2.

Under the Paperwork Reduction Act of 1995, no persons are required to respond to a collection of information unless it displays a valid OMB control number.

STATEMENT UNDER 37 CFR 3.73(c)

3. From: Biomerics, LLC To: Stratus Medical, LLC

The document was recorded in the United States Patent and Trademark Office at

Reel 52837, Frame 0846, or for which a copy thereof is attached*.

4. From: _____ To: _____

The document was recorded in the United States Patent and Trademark Office at

Reel _____, Frame _____, or for which a copy thereof is attached*.

5. From: _____ To: _____

The document was recorded in the United States Patent and Trademark Office at

Reel _____, Frame _____, or for which a copy thereof is attached*.

6. From: _____ To: _____

The document was recorded in the United States Patent and Trademark Office at

Reel _____, Frame _____, or for which a copy thereof is attached*.

☐ Additional documents in the chain of title are listed on a supplemental sheet(s).

☑ *As required by 37 CFR 3.73(c)(1)(i), the documentary evidence of the chain of title from the original owner to the assignee was, or concurrently is being, submitted for recordation pursuant to 37 CFR 3.11.

[NOTE: A separate copy (i.e., a true copy of the original assignment document(s)) must be submitted to Assignment Division in accordance with 37 CFR Part 3, to record the assignment in the records of the USPTO. See MPEP 302.08]

The undersigned (whose title is supplied below) is authorized to act on behalf of the assignee.

/ M.C. Phillips /	2026 April 30
Signature	Date
Matthew C. Phillips	43,403
Printed or Typed Name	Title or Registration Number

US010736688B2

(12) **United States Patent**
Wright et al.

(10) **Patent No.: US 10,736,688 B2**
(45) **Date of Patent: *Aug. 11, 2020**

(54) **METHODS AND SYSTEMS FOR SPINAL RADIO FREQUENCY NEUROTOMY**

(71) Applicant: **Stratus Medical, LLC**, Salt Lake City, UT (US)

(72) Inventors: **Robert E. Wright**, Denver, CO (US); **Scott A. Brandt**, Denver, CO (US)

(73) Assignee: **Stratus Medical, LLC**, Salt Lake City, UT (US)

(*) Notice: Subject to any disclaimer, the term of this patent is extended or adjusted under 35 U.S.C. 154(b) by 392 days.

This patent is subject to a terminal disclaimer.

(21) Appl. No.: **15/098,673**

(22) Filed: **Apr. 14, 2016**

(65) **Prior Publication Data**

US 2017/0065335 A1 Mar. 9, 2017

Related U.S. Application Data

(63) Continuation of application No. 12/940,974, filed on Nov. 5, 2010, now abandoned.
(Continued)

(51) **Int. Cl.**
A61B 18/14 (2006.01)
A61B 18/12 (2006.01)
(Continued)

(52) **U.S. Cl.**
CPC ***A61B 18/1477*** (2013.01); ***A61B 18/1206*** (2013.01); *A61B 2018/00434* (2013.01);
(Continued)

(58) **Field of Classification Search**
CPC A61B 18/1477; A61B 18/1467; A61B 2018/1253; A61B 2018/00577;
(Continued)

(56) **References Cited**

U.S. PATENT DOCUMENTS

4,011,872 A 3/1977 Kamiya
4,206,761 A 6/1980 Cosman
(Continued)

FOREIGN PATENT DOCUMENTS

AU 2017203754 6/2017
CN 1211171 A 3/1999
(Continued)

OTHER PUBLICATIONS

European Patent Office, European Search Report and EPO Form 1703 01.91 TRI for European Patent Application No. EP 18215729.7, dated Sep. 6, 2019, 5 pages.
(Continued)

Primary Examiner — Eun Hwa Kim
(74) *Attorney, Agent, or Firm* — Med Venture Management, LLC; Daniel C. Higgs

(57) **ABSTRACT**

Methods and systems for spinal radio frequency neurotomy. Systems include needles capable of applying RF energy to target volumes within a patient. Such target volumes may contain target medial branch nerves along vertebrae or rami proximate the sacrum. Such procedures may be used to ablate or cauterize a portion of the targeted nerve, thus blocking the ability of the nerve to transmit signals to the central nervous system. Disclosed needles may be operable to asymmetrically, relative to a central longitudinal axis of the needle, apply RF energy. Such asymmetry facilitates procedures where a tip of the needle is placed proximate to anatomical structures for location verification. Then RF energy may be applied in a selectable direction relative to the needle tip to ablate volumes that include the targeted medial branch nerves or rami, thus denervating facet joints or the sacroiliac joint, respectively, to relieve pain in a patient.

74 Claims, 19 Drawing Sheets

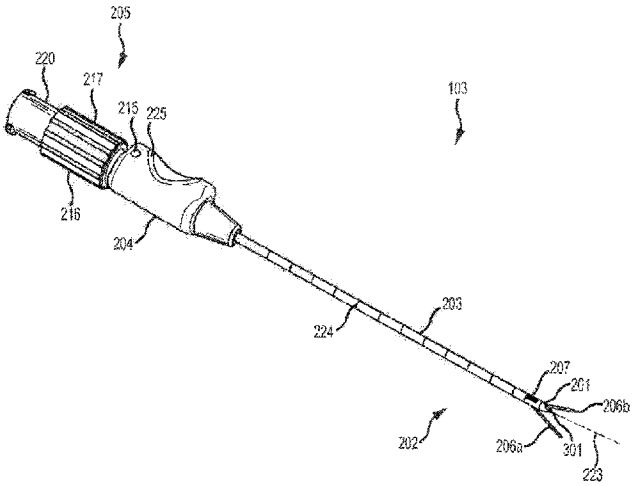

Related U.S. Application Data

(60) Provisional application No. 61/280,557, filed on Nov. 5, 2009, provisional application No. 61/347,351, filed on May 21, 2010.

(51) **Int. Cl.**
A61B 18/00 (2006.01)
A61B 90/00 (2016.01)

(52) **U.S. Cl.**
CPC *A61B 2018/00577* (2013.01); *A61B 2018/00595* (2013.01); *A61B 2018/00642* (2013.01); *A61B 2018/00791* (2013.01); *A61B 2018/00821* (2013.01); *A61B 2018/00875* (2013.01); *A61B 2018/126* (2013.01); *A61B 2018/1253* (2013.01); *A61B 2018/1467* (2013.01); *A61B 2090/376* (2016.02); *A61B 2090/3762* (2016.02)

(58) **Field of Classification Search**
CPC A61B 2218/001; A61B 2218/002; A61B 2218/003
See application file for complete search history.

(56) **References Cited**

U.S. PATENT DOCUMENTS

4,206,762 A 6/1980 Cosman
4,281,667 A 8/1981 Cosman
4,353,371 A 10/1982 Cosman
4,375,220 A 3/1983 Matvias
4,378,809 A 4/1983 Cosman
4,385,636 A 5/1983 Cosman
4,411,266 A 10/1983 Cosman
4,565,200 A 1/1986 Cosman
4,573,980 A 3/1986 Karrasch et al.
4,583,538 A 4/1986 Onik et al.
4,593,703 A 6/1986 Cosman
4,618,978 A 10/1986 Cosman
4,646,752 A 3/1987 Swann et al.
4,653,508 A 3/1987 Cosman
4,660,568 A 4/1987 Cosman
4,676,255 A 6/1987 Cosman
4,698,207 A 10/1987 Bringham et al.
4,787,886 A 11/1988 Cosman
4,796,615 A 1/1989 Bullock et al.
4,827,927 A 5/1989 Newton
4,838,265 A 6/1989 Cosman et al.
4,886,506 A 12/1989 Lovgren et al.
4,907,589 A 3/1990 Cosman
4,966,597 A 10/1990 Cosman
5,010,897 A 4/1991 Leveen
5,160,337 A 11/1992 Cosman
5,217,457 A 6/1993 Delahuerga et al.
5,230,623 A 7/1993 Guthrie et al.
5,233,515 A 8/1993 Cosman
5,244,462 A 9/1993 Delahuerga et al.
5,257,630 A 11/1993 Braitman et al.
5,291,896 A 3/1994 Fonger et al.
5,304,114 A 4/1994 Cosman et al.
5,304,115 A 4/1994 Pflueger et al.
5,312,329 A 5/1994 Beaty et al.
5,312,391 A 5/1994 Wilk
5,318,013 A 6/1994 Wilk
5,324,255 A 6/1994 Passafaro et al.
5,334,183 A 8/1994 Wuchinich
5,342,292 A 8/1994 Nita et al.
5,370,645 A 12/1994 Klicek et al.
5,370,675 A 12/1994 Edwards et al.
5,372,596 A 12/1994 Klicek et al.
5,377,685 A 1/1995 Kazi et al.
5,383,917 A 1/1995 Desai et al.
5,397,301 A 3/1995 Pflueger et al.
5,401,272 A 3/1995 Perkins
5,421,923 A 6/1995 Clarke et al.
5,422,567 A 6/1995 Matsunaga
5,423,809 A 6/1995 Klicek
5,433,739 A 7/1995 Sluijter et al.
5,447,417 A 9/1995 Kuhl et al.
5,458,597 A 10/1995 Edwards et al.
5,472,441 A 12/1995 Edwards et al.
5,472,442 A 12/1995 Klicek
5,474,057 A 12/1995 Makower et al.
5,484,398 A 1/1996 Stoddard
5,486,161 A 1/1996 Lax et al.
5,496,312 A 3/1996 Klicek
5,507,743 A 4/1996 Edwards et al.
5,507,802 A 4/1996 Imran
5,511,564 A 4/1996 Wilk
5,514,129 A 5/1996 Smith
D372,086 S 7/1996 Grasso et al.
5,536,267 A 7/1996 Edwards et al.
5,541,376 A 7/1996 Ladtkow et al.
5,560,358 A 10/1996 Arnold et al.
5,562,703 A 10/1996 Desai
5,571,147 A 11/1996 Sluijter et al.
5,580,665 A 12/1996 Taguchi et al.
5,599,345 A 2/1997 Edwards et al.
5,599,346 A * 2/1997 Edwards A61N 5/045 606/41
5,611,709 A 3/1997 McAnulty
5,613,966 A 3/1997 Makower et al.
5,628,743 A 5/1997 Cimino
5,662,111 A 9/1997 Cosman
5,662,620 A 9/1997 Lieber et al.
5,662,680 A 9/1997 Desai
5,667,488 A 9/1997 Lundquist et al.
5,669,904 A 9/1997 Platt, Jr. et al.
5,672,173 A 9/1997 Gough et al.
5,672,174 A 9/1997 Gough et al.
5,683,349 A 11/1997 Makower et al.
5,683,384 A 11/1997 Gough et al.
5,701,575 A 12/1997 Taguchi et al.
5,720,744 A 2/1998 Eggleston et al.
5,728,143 A 3/1998 Gough et al.
5,735,847 A 4/1998 Gough et al.
5,738,648 A 4/1998 Lands et al.
5,748,703 A 5/1998 Cosman
5,749,689 A 5/1998 Konig
5,749,846 A 5/1998 Edwards et al.
5,755,754 A 5/1998 Rudie et al.
5,768,679 A 6/1998 Taguchi et al.
5,772,659 A 6/1998 Becker et al.
5,778,043 A 7/1998 Cosman
5,782,827 A 7/1998 Gough et al.
5,792,146 A 8/1998 Cosman
5,797,906 A 8/1998 Rhum et al.
5,800,484 A 9/1998 Gough et al.
5,807,309 A 9/1998 Lundquist et al.
5,810,804 A 9/1998 Gough et al.
5,827,271 A 10/1998 Buysse et al.
5,827,276 A 10/1998 LeVeen et al.
5,848,967 A 12/1998 Cosman
5,855,576 A 1/1999 LeVeen et al.
5,863,290 A 1/1999 Gough et al.
5,868,740 A 2/1999 LeVeen et al.
5,893,847 A 4/1999 Kordis
5,911,739 A 6/1999 Kordis et al.
5,913,855 A 6/1999 Gough et al.
5,921,992 A 7/1999 Costales et al.
5,925,042 A 7/1999 Gough et al.
5,928,229 A 7/1999 Gough et al.
5,935,123 A 8/1999 Edwards et al.
5,951,547 A 9/1999 Gough et al.
5,968,040 A 10/1999 Swanson et al.
5,980,517 A 11/1999 Gough
5,983,141 A 11/1999 Sluijter et al.
6,006,126 A 12/1999 Cosman
6,013,076 A 1/2000 Goble et al.
6,014,590 A 1/2000 Whayne et al.
6,015,406 A 1/2000 Goble et al.
6,016,452 A 1/2000 Kasevich
6,039,733 A 3/2000 Buysse et al.
6,041,260 A 3/2000 Stern et al.

(56) **References Cited**

U.S. PATENT DOCUMENTS

6,044,846	A	4/2000	Edwards
6,045,532	A	4/2000	Eggers et al.
6,050,992	A	4/2000	Nichols
6,053,937	A	4/2000	Edwards et al.
6,059,780	A	5/2000	Gough et al.
6,068,627	A	5/2000	Orszulak et al.
6,071,280	A	6/2000	Edwards et al.
6,080,150	A	6/2000	Gough
6,090,105	A	7/2000	Zepeda et al.
6,105,581	A	8/2000	Eggers et al.
6,106,521	A	8/2000	Blewett et al.
6,117,134	A	9/2000	Cunningham et al.
6,122,341	A	9/2000	Butler et al.
6,129,726	A	10/2000	Edwards et al.
6,132,425	A	10/2000	Gough
6,139,519	A	10/2000	Blythe
6,139,547	A	10/2000	Lontine et al.
6,143,003	A	11/2000	Cosman
6,146,380	A	11/2000	Racz et al.
6,161,048	A	12/2000	Sluijter et al.
6,165,169	A	12/2000	Panescu et al.
6,167,295	A	12/2000	Cosman
6,179,834	B1	1/2001	Buysse et al.
6,210,403	B1	4/2001	Klicek
6,210,406	B1	4/2001	Webster
6,213,999	B1	4/2001	Platt, Jr. et al.
6,216,043	B1	4/2001	Swanson et al.
6,217,554	B1	4/2001	Green
6,221,071	B1	4/2001	Sherry et al.
6,228,080	B1	5/2001	Gines
6,228,083	B1	5/2001	Lands et al.
6,231,570	B1	5/2001	Tu et al.
6,234,178	B1	5/2001	Goble et al.
6,235,023	B1	5/2001	Lee et al.
6,241,725	B1	6/2001	Cosman
6,241,726	B1	6/2001	Chia et al.
6,246,912	B1	6/2001	Sluijter et al.
6,251,106	B1	6/2001	Becker et al.
6,259,952	B1	7/2001	Sluijter et al.
6,268,200	B1	7/2001	Tucker et al.
6,275,725	B1	8/2001	Cosman
6,277,117	B1	8/2001	Tetziaff et al.
6,280,441	B1	8/2001	Ryan
6,287,304	B1	9/2001	Eggers et al.
6,312,426	B1	11/2001	Goldberg et al.
6,330,478	B1	12/2001	Lee et al.
6,331,180	B1	12/2001	Cosman et al.
6,334,861	B1	1/2002	Chandler et al.
6,352,536	B1	3/2002	Buysse et al.
6,402,743	B1	6/2002	Orszulak et al.
6,402,747	B1	6/2002	Lindermann et al.
6,405,072	B1	6/2002	Cosman
6,416,520	B1	7/2002	Kynast et al.
6,419,653	B2	7/2002	Edwards et al.
6,419,680	B1	7/2002	Cosman et al.
6,419,798	B1	7/2002	Topolkaraev et al.
6,425,887	B1	7/2002	McGuckin et al.
6,440,127	B2	8/2002	McGovern et al.
6,447,477	B2	9/2002	Burney et al.
6,447,505	B2	9/2002	McGovern et al.
6,451,018	B1	9/2002	Lands et al.
6,454,765	B1	9/2002	Leveen et al.
6,458,130	B1	10/2002	Frazier et al.
6,459,769	B1	10/2002	Cosman
6,461,314	B1	10/2002	Pant et al.
6,464,704	B2	10/2002	Schmaltz et al.
6,468,273	B1	10/2002	Leveen et al.
6,471,695	B1	10/2002	Behl
6,471,698	B1	10/2002	Edwards et al.
6,478,793	B1	11/2002	Cosman et al.
6,500,175	B1	12/2002	Gough et al.
6,506,189	B1	1/2003	Rittman, III et al.
6,517,534	B1	2/2003	McGovern et al.
6,530,922	B2	3/2003	Cosman et al.
6,533,987	B2	3/2003	Topolkaraev et al.
6,551,311	B2	4/2003	Lee et al.
6,562,033	B2	5/2003	Shah et al.
6,565,562	B1	5/2003	Shah et al.
6,569,159	B1	5/2003	Edwards et al.
6,575,967	B1	6/2003	Leveen et al.
6,575,969	B1	6/2003	Rittman, III et al.
6,585,735	B1	7/2003	Frazier et al.
6,602,249	B1	8/2003	Stoddard et al.
6,605,085	B1	8/2003	Edwards
6,610,054	B1	8/2003	Edwards et al.
6,622,731	B2	9/2003	Daniel et al.
6,623,481	B1	9/2003	Garbagnati et al.
6,632,221	B1	10/2003	Edwards et al.
6,632,222	B1	10/2003	Edwards et al.
6,638,275	B1	10/2003	McGaffigan et al.
6,641,580	B1	11/2003	Edwards et al.
6,645,201	B1	11/2003	Utley et al.
6,652,515	B1	11/2003	Maguire et al.
6,652,516	B1	11/2003	Gough
6,660,002	B1	12/2003	Edwards et al.
6,660,362	B1	12/2003	Lindsay et al.
6,663,624	B2	12/2003	Edwards et al.
6,669,693	B2	12/2003	Friedman
6,682,526	B1	1/2004	Jones et al.
6,682,528	B2	1/2004	Frazier et al.
6,685,701	B2	2/2004	Orszulak et al.
6,689,127	B1	2/2004	Gough et al.
6,690,210	B2	2/2004	Hadjizada et al.
6,692,490	B1	2/2004	Edwards
6,699,242	B2	3/2004	Heggeness
6,706,152	B2	3/2004	Burazin et al.
6,723,092	B2	4/2004	Brown et al.
6,740,080	B2	5/2004	Jain et al.
6,743,226	B2	6/2004	Cosman et al.
6,743,229	B2	6/2004	Buysse et al.
6,746,570	B2	6/2004	Burazin et al.
6,749,719	B2	6/2004	Burazin et al.
6,752,804	B2	6/2004	Simpson et al.
6,770,070	B1	8/2004	Balbierz
6,780,180	B1	8/2004	Goble et al.
6,803,549	B2	10/2004	Yu
6,814,712	B1	11/2004	Edwards et al.
6,837,956	B2	1/2005	Cowell et al.
6,846,448	B2	1/2005	Rymer et al.
6,847,848	B2	1/2005	Sterzer et al.
6,852,091	B2	2/2005	Edwards et al.
6,866,663	B2	3/2005	Edwards et al.
6,881,214	B2	4/2005	Cosman et al.
6,889,089	B2	5/2005	Behl et al.
6,896,675	B2	5/2005	Leung et al.
6,932,810	B2	8/2005	Ryan
6,958,062	B1	10/2005	Gough et al.
6,958,064	B2	10/2005	Rioux et al.
6,961,602	B2	11/2005	Fuimaono et al.
6,962,587	B2	11/2005	Johsnon et al.
6,964,660	B2	11/2005	Maguire et al.
6,966,908	B2	11/2005	Maguire et al.
6,974,455	B2	12/2005	Garabedian et al.
6,989,004	B2	1/2006	Hinchliffe et al.
6,997,925	B2	2/2006	Maguire et al.
7,025,767	B2	4/2006	Schaefer et al.
7,033,353	B2	4/2006	Stoddard et al.
7,044,949	B2	5/2006	Orszulak et al.
7,048,733	B2	5/2006	Hartley et al.
7,056,320	B2	6/2006	Utley et al.
7,074,484	B2	7/2006	Topolkaraev et al.
7,076,399	B2	7/2006	Godara
7,087,051	B2	8/2006	Bourne et al.
7,099,712	B2	8/2006	Fuimaono et al.
7,108,696	B2 *	9/2006	Daniel A61B 18/1477 606/41
7,112,197	B2	9/2006	Hartley et al.
7,115,124	B1	10/2006	Xiao
7,138,088	B2	11/2006	Wariar et al.
7,150,743	B2	12/2006	Zvuloni et al.
7,150,744	B2	12/2006	Edwards et al.
7,160,296	B2	1/2007	Pearson et al.
7,163,536	B2	1/2007	Godara
7,179,256	B2	2/2007	Mest

(56) **References Cited**

U.S. PATENT DOCUMENTS

7,179,258 B2 2/2007 Buysse et al.
7,207,990 B2 4/2007 Lands et al.
7,229,438 B2 6/2007 Young
7,258,688 B1 8/2007 Shah et al.
7,266,414 B2 9/2007 Cornelius et al.
7,270,660 B2 9/2007 Ryan
7,270,661 B2 9/2007 Dahla et al.
7,270,662 B2 9/2007 Visram et al.
7,276,064 B2 10/2007 Paul et al.
7,281,666 B2 10/2007 Smith
7,294,127 B2 11/2007 Leung et al.
7,306,596 B2 12/2007 Hillier et al.
7,311,702 B2 12/2007 Tallarida et al.
7,318,822 B2 1/2008 Darmos et al.
7,340,307 B2 3/2008 Maguire et al.
7,344,533 B2 3/2008 Pearson et al.
RE40,279 E 4/2008 Sluijter et al.
7,354,436 B2 4/2008 Rioux et al.
7,357,798 B2 4/2008 Sharps et al.
7,371,234 B2 5/2008 Young
RE40,388 E 6/2008 Gines
7,387,626 B2 6/2008 Edwards et al.
7,387,630 B2 6/2008 Mest
7,393,351 B2 7/2008 Woloszko et al.
7,399,299 B2 7/2008 Daniel et al.
7,416,549 B2 8/2008 Young et al.
7,419,487 B2 9/2008 Johnson et al.
7,449,020 B2 11/2008 Edwards et al.
7,458,971 B2 12/2008 Zerfas et al.
7,468,062 B2 12/2008 Oral et al.
7,480,533 B2 1/2009 Cosman et al.
7,517,346 B2 4/2009 Sloan et al.
7,524,318 B2 4/2009 Young et al.
7,533,002 B2 5/2009 Godara
7,549,986 B2 6/2009 Rioux et al.
7,561,907 B2 7/2009 Fuimaono et al.
7,593,778 B2 9/2009 Chandran et al.
7,596,469 B2 9/2009 Godara
7,615,050 B2 11/2009 Cross et al.
7,670,336 B2 3/2010 Young et al.
7,670,337 B2 3/2010 Young
7,678,106 B2 3/2010 Lee
7,678,107 B2 3/2010 Young
7,699,844 B2 4/2010 Utley et al.
7,704,248 B2 4/2010 Dicarlo
7,771,420 B2 8/2010 Butty et al.
7,794,458 B2 9/2010 McIntyre et al.
7,794,459 B2 9/2010 Faure
7,797,049 B2 9/2010 Christopherson et al.
7,799,021 B2 9/2010 Leung et al.
7,815,571 B2 10/2010 Deckman et al.
7,819,869 B2 10/2010 Godara et al.
7,819,871 B2 10/2010 Paul et al.
7,823,796 B2 11/2010 Wong et al.
7,824,404 B2 11/2010 Godara et al.
7,846,157 B2 12/2010 Kozel
7,874,986 B2 1/2011 Deckman et al.
7,875,025 B2 1/2011 Cockburn et al.
7,892,231 B2 2/2011 Elliott
7,896,871 B2 3/2011 Bhushan et al.
7,896,874 B2 3/2011 Young et al.
7,918,852 B2 * 4/2011 Tullis A61B 18/1477 606/41
8,262,574 B2 9/2012 Placek et al.
8,512,330 B2 8/2013 Epstein et al.
8,518,037 B2 8/2013 Young
8,753,335 B2 6/2014 Moshe et al.
9,402,560 B2 8/2016 Organ et al.
9,675,406 B2 6/2017 Moss et al.
2001/0012956 A1 8/2001 Behl et al.
2002/0022864 A1 2/2002 Mahvi et al.
2002/0026185 A1 2/2002 Gough
2002/0029037 A1 3/2002 Kim
2002/0133148 A1 9/2002 Daniel et al.
2002/0143302 A1 * 10/2002 Hinchliffe A61B 18/00 604/272
2002/0188275 A1 12/2002 McGuckin, Jr.
2003/0018332 A1 1/2003 Schmaltz et al.
2003/0078595 A1 4/2003 Cosman
2003/0199862 A1 10/2003 Simpson et al.
2004/0006336 A1 1/2004 Swanson
2004/0015176 A1 1/2004 Cosman
2004/0015218 A1 1/2004 Finch et al.
2004/0059328 A1 3/2004 Daniel et al.
2004/0064137 A1 4/2004 Pellegrino et al.
2004/0100376 A1 5/2004 Lye et al.
2004/0122482 A1 6/2004 Tung et al.
2004/0143262 A1 7/2004 Visram et al.
2004/0158239 A1 8/2004 Behl et al.
2004/0176759 A1 9/2004 Krishnamurthy et al.
2004/0199179 A1 10/2004 Elliott
2004/0230187 A1 11/2004 Lee et al.
2004/0260282 A1 * 12/2004 Gough A61B 18/1477 606/41
2005/0033279 A1 2/2005 Edwards et al.
2005/0059964 A1 3/2005 Fitz
2005/0085804 A1 4/2005 McGaffigan
2005/0101944 A1 5/2005 Williams
2005/0101950 A1 5/2005 Gough et al.
2005/0165391 A1 7/2005 Maguire et al.
2005/0171522 A1 8/2005 Christopherson
2005/0177209 A1 8/2005 Leung et al.
2005/0177211 A1 8/2005 Leung et al.
2005/0203503 A1 9/2005 Edwards et al.
2005/0234445 A1 10/2005 Conquergood et al.
2005/0240174 A1 10/2005 Pearson et al.
2005/0267552 A1 12/2005 Conquergood et al.
2005/0277918 A1 12/2005 Shah et al.
2006/0015161 A1 1/2006 Longo et al.
2006/0084965 A1 * 4/2006 Young A61B 18/148 606/41
2006/0089635 A1 4/2006 Young et al.
2006/0095029 A1 * 5/2006 Young A61B 18/148 606/41
2006/0095115 A1 5/2006 Bladillah et al.
2006/0111702 A1 5/2006 Oral et al.
2006/0122686 A1 6/2006 Gilad et al.
2006/0122692 A1 6/2006 Gilad et al.
2006/0142756 A1 6/2006 Davies et al.
2006/0173359 A1 8/2006 Lin et al.
2006/0189972 A1 8/2006 Grossman
2006/0200121 A1 9/2006 Mowery
2006/0206111 A1 * 9/2006 Young A61B 18/1477 606/44
2006/0206127 A1 9/2006 Conquergood et al.
2006/0206128 A1 9/2006 Conquergood et al.
2006/0206129 A1 9/2006 Conquergood et al.
2006/0206130 A1 9/2006 Conquergood et al.
2006/0206131 A1 9/2006 Conquergood et al.
2006/0206132 A1 9/2006 Conquergood et al.
2006/0206133 A1 9/2006 Conquergood et al.
2006/0206134 A1 9/2006 Conquergood et al.
2006/0217705 A1 9/2006 Godara et al.
2006/0229645 A1 10/2006 Bonnette et al.
2006/0247616 A1 11/2006 Edwards et al.
2006/0259026 A1 11/2006 Godara et al.
2006/0259027 A1 11/2006 Kwan et al.
2006/0271036 A1 11/2006 Garabedian et al.
2007/0006215 A1 1/2007 Epstein et al.
2007/0010809 A1 1/2007 Hovda et al.
2007/0016183 A1 1/2007 Lee et al.
2007/0027449 A1 2/2007 Godara et al.
2007/0060921 A1 3/2007 Janssen et al.
2007/0112340 A1 5/2007 Thomas et al.
2007/0112342 A1 5/2007 Pearson et al.
2007/0118191 A1 5/2007 Godara
2007/0123964 A1 5/2007 Davies et al.
2007/0156136 A1 7/2007 Godara et al.
2007/0161905 A1 7/2007 Munrow
2007/0167943 A1 7/2007 Janssen et al.
2007/0179380 A1 8/2007 Grossman
2007/0179491 A1 8/2007 Kratoska et al.
2007/0185522 A1 8/2007 Davies et al.

(56) **References Cited**

U.S. PATENT DOCUMENTS

2007/0203402	A1	8/2007	Godara et al.	
2007/0203486	A1	8/2007	Young	
2007/0213703	A1	9/2007	Naam et al.	
2007/0260234	A1	11/2007	Mccullagh et al.	
2007/0282321	A1	12/2007	Shah et al.	
2007/0287996	A1	12/2007	Rioux	
2008/0015569	A1	1/2008	Saadat et al.	
2008/0033493	A1	2/2008	Deckman et al.	
2008/0045939	A1	2/2008	Lee	
2008/0045940	A1	2/2008	Lee	
2008/0048786	A1	2/2008	Feldkamp et al.	
2008/0065062	A1	3/2008	Leung et al.	
2008/0154259	A1	6/2008	Gough et al.	
2008/0161804	A1	7/2008	Rioux et al.	
2008/0167646	A1	7/2008	Godara et al.	
2008/0167649	A1	7/2008	Edwards et al.	
2008/0208121	A1	8/2008	Youssef et al.	
2008/0228180	A1	9/2008	Epstein	
2008/0228181	A1	9/2008	Godara et al.	
2008/0249392	A1	10/2008	Mest	
2008/0249523	A1	10/2008	McPherson et al.	
2008/0269558	A1	10/2008	Yahagi et al.	
2008/0269739	A1	10/2008	Young et al.	
2008/0275443	A1	11/2008	Oral et al.	
2009/0024124	A1	1/2009	Lefler et al.	
2009/0054962	A1	2/2009	Lefler et al.	
2009/0099544	A1	4/2009	Munrow et al.	
2009/0131790	A1	5/2009	Munrow et al.	
2009/0138011	A1	5/2009	Epstein	
2009/0137177	A1	7/2009	Epstein	
2009/0187182	A1	7/2009	Epstein et al.	
2009/0187183	A1	7/2009	Epstein	
2009/0198232	A1	8/2009	Young et al.	
2009/0221998	A1	9/2009	Epstein et al.	
2009/0228001	A1	9/2009	Pacey	
2009/0287081	A1	11/2009	Grossman et al.	
2009/0292259	A1*	11/2009	Delano	A61B 17/3401 604/263
2009/0299358	A1	12/2009	Lafontaine	
2009/0306604	A1	12/2009	Darmos et al.	
2010/0004651	A1	1/2010	Biyani	
2010/0042098	A1	2/2010	Cross et al.	
2010/0049192	A1*	2/2010	Holtz	A61B 18/1492 606/41
2010/0056926	A1	3/2010	Deckman et al.	
2010/0076303	A1	3/2010	McKinley	
2010/0076340	A1	3/2010	Eckstein et al.	
2010/0099980	A1	4/2010	Godara et al.	
2010/0114095	A1	5/2010	Janssen et al.	
2010/0130974	A1	5/2010	Young et al.	
2010/0185082	A1	7/2010	Chandran et al.	
2010/0222677	A1	9/2010	Placek et al.	
2011/0184403	A1	7/2011	Brannan	
2011/0288540	A1	11/2011	Wright et al.	
2013/0096549	A1	4/2013	Organ et al.	
2017/0065334	A1	3/2017	Wright et al.	

FOREIGN PATENT DOCUMENTS

CN	2418844		2/2001
CN	1338909	A	3/2002
DE	2124684		11/1972
EP	1059067	B1	4/2005
EP	1645235	B1	11/2010
GB	2423024		8/2006
JP	2000-507844		6/2000
JP	2001-527428		12/2001
JP	2003-527888		9/2003
JP	2004-267759		9/2004
JP	2008-516667		5/2008
JP	2009-504201		2/2009
JP	4290894	B2	4/2009
JP	2013-509966		3/2013
WO	96/04860		2/1996
WO	96/16606		6/1996
WO	WO 96/29946		10/1996
WO	97/06740		2/1997
WO	97/06855		2/1997
WO	97/06857		2/1997
WO	WO 97/06739		2/1997
WO	97/29702		8/1997
WO	99/25260		5/1999
WO	00/06046		2/2000
WO	01/28446		4/2001
WO	01/57655		8/2001
WO	02/22032		3/2002
WO	02/54941		7/2002
WO	2006/044105		4/2006
WO	2006/104682		10/2006
WO	2007/005830		1/2007
WO	2008/083044		7/2008
WO	WO 2011/057157		5/2011
WO	2011/113943		9/2011
WO	2011/146243		11/2011

OTHER PUBLICATIONS

European Patent Office, Communication Under Rule 71(3) EPC for European Patent Application No. EP 11783944.9, dated Dec. 18, 2019, 125 pages.

Instituto Nacional Da Propriedade Industrial, Search Report for Brazilian Patent Application No. BR112012029263-3, dated Dec. 6, 2019, 8 pages.

United States Patent and Trademark Office, Applicant-Initiated Interview Summary for U.S. Appl. No. 15/092,945, dated Feb. 18, 2020, 4 pages.

U.S. Appl. No. 12/940,974 (the Parent Application), filed Nov. 5, 2010, Methods and Systems for Spinal Radio Frequency Neurotomy.

U.S. Appl. No. 15/098,673 (the Present Application), filed Apr. 14, 2016, Methods and Systems for Spinal Radio Frequency Neurotomy.

U.S. Appl. No. 13/101,009, file May 4, 2011, Systems and Methods for Tissue Ablation.

U.S. Appl. No. 15/092,945, filed Apr. 7, 2016, Systems and Methods for Tissue Ablation.

Barauskas et al., Investigation of radiofrequency ablation process in liver tissue by finite element modeling and experiment, *Medicine (Kaunas)*, vol. 43(4), pp. 310-325, 2007.

Berjano, Theoretical modeling for radiofrequency ablation: state-of-the-art and challenges for the future, *BioMedical Engineering OnLine*, vol. 5(24), 17 pages, Apr. 18, 2006.

Burdio et al., Bipolar Saline-enhanced Electrode for Radiofrequency Ablation: Results of Experimental Study of in Vivo Porcine Liver, *Radiology*, vol. 229(2), pp. 447-456, Nov. 2003.

Choi et al., Overlapping Ablation Using a Coaxial Radiofrequency Electrode and Multiple Cannulae System: Experimental Study in ex-Vivo Bovine Liver, *Korean Journal of Radiology*, vol. 4(2), pp. 117-123, Jun. 2003.

Chua, Clinical Anatomy of the Thoracic Dorsal Rami, Thesis at the University of Newcastle, New South Wales, Australia, 220 pages, 1994.

Derby et al., The Efficacy of a Two Needle Electrode Technique in Percutaneous Radiofrequency Rhizotomy: An Investigational Laboratory Study in an Animal Model, *Pain Physician*, vol. 9, pp, 207-214, 2006.

Govind et al., Radiofrequency neurotomy for the treatment of third occipital headache, *Journal of Neurology, Neurosurgery & Psychiatry*, vol. 74(1), pp. 88-93, Jan. 2003.

Liu et al., Abstract, Computer modeling of factors that affect the minimum safety distance required for radiofrequency ablation near adjacent nontarget structures, *Journal of Vascular and Interventional Radiology*, vol. 19(7), pp. 1079-1086, Jul. 2008, Epub. May 27, 2008.

Lord et al., Percutaneous Radio-Frequency Neurotomy for Chronic Cervical Zygapophyseal-Joint Pain, *New England Journal of Medicine*, vol. 335(23), pp. 1721-1726, Dec. 5, 2006.

Mulier et al., Electrodes and multiple electrode systems for radiofrequency ablation: a proposal for updated terminology. *European Radiology*, vol. 15, pp. 798-808, 2005, Epub Feb. 12, 2005.

(56) **References Cited**

OTHER PUBLICATIONS

O'Rourke et al., Current status of liver tumor ablation devices, *Expert Rev. Med. Devices*, vol. 4(4), pp. 523-537, 2007.
AngioDynamics® Incorporated, RITA® StarBurst® Model 75; StarBurst® SOF Electrosurgical Device, StarBurst® XL Electrosurgical Device, MRI Compatible StarBurst® XL Device, MRI Compatible StarBurst® Semi-Flex Electrosurgical Device; Instructions for Use, (no date) in 5 pages.
AngioDynamics®, StarBurst® XL RFA Device; StarBurst® Semi-Flex RFA Device, http://www.angiodynamics.com/products/starburst-semiflex, 2011, in 2 pages.
Baylis Medical Company, Inc., Pain Management; SInergy™ System, Apr. 2008. in 6 pages.
Baylis Medical Company, Inc., Pain Management; RF Generator V3 Platform, May 2008, in 6 pages.
Baylis Medical Company, Inc., for Thoracic Medial Branch Neurotomy; ThoraCool™ Pain Management System, 2009, in 3 pages.
Boston Scientific, LeVeen® Needle Electrodes; The Choice for Open, Laparoscopic or Percutaneous Radiofrequency Ablation. 2006, in 2 pages.
Boston Scientific, LeVeen® CoAccess™ Electrode System; Coaxial Radiofrequency Ablation Device, 2006, in 2 pages.
Diros Technology Inc., OWL Pain Management Sets, http://www.dirostech.com/22.php, (no date), in 3 pages.
Diros Technology Inc., OWL Sterile Single Use (Disposable) RF Probes, http://www.dirostech.com/productdetail.php?a=16&b+3, 2007, in 1 page.
Diros Technology Inc., OWL Re-Usable RF Probes, http://www.dirostech.com/productdetail.php?a=17&b=3, 2007, in 1 page.
FDA, Design Control Guidance for Medical Device Manufacturers, Mar. 11, 1997, in 53 pages.
Leibinger®, Electrodes for Neurosurgical Applications. pp. 4-10, 12 (no date).
Leibinger®, Accessories for RF-Electrosurgery; Bipolar and Monoplar Electrodes; Active and Inactive Cannulas; User Manual, Feb. 2000, in 24 pages.
NeuroTherm®, http://www.neurotherm.com/interventional_pain_prod_electrodes.htm, 2007. in 2 pages.
NeuroTherm®, One System, Multiple Applications, Mar. 2007, in 2 pages.
NeuroTherm®, RF for Pain Management; Disposable RF Electrode, (no date) in 2 pages.
NeuroTherm®, RF for Pain Management; Simplicity, (no date) in 2 pages.
Rex Medical, Quadra-Fuse; Multi-pronged Injection Needle, http://www.rexmedical.com/quadra-ifuse.html, 2010, in 2 pages.
Smith & Nephew Endoscopy, Electrothermal 20S Spine System, http://endo.smith-nephew.com/fr/node.asp?NodeId=3592, (no date) in 2 pages.
Stryker Instruments, "MultiGen® One Machine; Four Lesions; Multiple Options," Jul. 2008, in 8 pages.
International Search Report and Written Opinion of the International Searching Authority for International Application No. PCT/US2010/055744, dated Mar. 1, 2011, in 34 pages.
International Preliminary Report on Patentability issued in PCT/US2011/035253, dated Nov. 27, 2012.
International Search Report and Written Opinion of the International Searching Authority for International Application No. PCT/US2011/035253 dated Aug. 18. 2011.
Patent Examination Report issued in Australian Application No. 2011256709, dated Mar. 22, 2013.
Patent Examination Report issued in Australian Application No. 2010314930, dated Jul. 26, 2013.
Notice of Acceptance issued in Australian Application No. 2010314930, dated Oct. 14, 2013.
Notice of Acceptance issued in Australian Application No. 2011256709, dated Oct. 10. 2013.
Office Action issued in U.S. Appl. No. 13/101,009, dated Mar. 6, 2014.
Office Action issued in Japanese Application No. 2012-533056, dated May 19, 2014.
Supplemental European Search Report and Search Opinion issued in EP Application No. 10829203.8, dated May 9, 2014.
Final Office Action issued in U.S. Appl. No. 13/101,009 dated Jul. 3, 2014.
Supplemental European Search Report and Search Opinion issued in EP Application No. 11783944, dated Jun. 23, 2014.
Office Action issued in Japanese Application No. 2013-511205, dated Aug. 4, 2014.
Office Action issued in U.S. Appl. No. 13/101,009, dated Oct. 17, 2014.
Office Action issued in Chinese Application No. 201180035655.7, dated Aug. 25, 2014.
Office Action issued in Korean Application No. 10-2012-7033363, dated Dec. 23, 2014.
Patent Examination Report issued in Australian Application No. 2014200132, dated Dec. 1, 2014.
Office Action issued in Japanese Application No. 2012-538056, dated Feb. 2, 2015.
Biomerics LLC, Statement of Claim, *Biomerics LLC* v *Diros Technology Inc & M Medical Pty Ltd*, NSD438/2019, Federal Court of Australia, Mar. 22, 2019, 10 pages.
Diros Technology Inc, Statement of Cross Claim, *Biomerics LLC* v *Diros Technology Inc & M Medical Pty Ltd*, NSD438/2019, Federal Court of Australia, May 13, 2019, 5 pages.
Diros Technology Inc., RF Trident Cannulae, Last Accessed Aug. 20, 2019, available at https://dirostech.com/product-details/rf-tridenttrident-hybrid-cannulae/, 7 pages.
Diros Technology Inc., RF Trident Hybrid Cannulae, Last Accessed Aug. 20, 2019, available at https://dirostech.com/product-details/rf-trident-hybrid-cannulae/, 10 pages.
Food and Drug Administration, 510(k) Summary for Diros OWL Sterile Single Use Trident R.F. Insulated Cannulae Models DTR and DTRH, Jul. 30, 2015, 11 pages.
Ahmed et al., Principles of and Advances in Percutaneous Ablation, Radiology, Feb. 2011, pp. 351-369, vol. 258, No. 2.
Chen et al., Optimizing Electrode Placement Using Finite-Element Models in Radiofrequency Ablation Treatment Planning, IEEE Transactions on Biomedical Engineering, Feb. 2009, pp. 237-245, vol. 56, No. 2.
Haemmerich et al., Hepatic Bipolar Radio-Frequency Ablation Between Separated Multiprong Electrodes, IEEE Transactions on Biomedical Engineering, Oct. 2001, pp. 1145-1152, vol. 48, No. 10.
Haemmerich et al., Large-Volume Radiofrequency Ablation of ex Vivo Bovine Liver with Multiple Cooled Cluster Electrodes, Radiology, Feb. 2005, pp. 563-568, vol. 234, No. 2.
Laeseke et al., Multiple-Electrode RF Ablation Creates Confluent Areas of Necrosis: Results in in vivo Porcine Liver, Radiology, Oct. 2006, pp. 116-124.
Quaranta et al., FEM Analysis of RF Breast Ablation: Multiprobe versus Cool-tip Electrode, Anticancer Research, 2007, pp. 775-784.
Scharf et al., Ablation of Persistent Atrial Fibrillation Using Multielectrode Catheters and Duty-Cycled Radiofrequency Energy, Journal of the American College of Cardiology, Oct. 6, 2009, pp. 1450-1456, vol. 54, No. 15.
Shirato et al., Small Hepatocellular Carcinoma: Therapeutic Effectiveness of Percutaneous Radio Frequency Ablation Therapy With a LeVeen Needle Electrode, American Institute of Ultrasound in Medicine, 2002, pp. 67-76.
IP Australia, Patent Examination Report No. 2, Australian Patent Application No. 2014200132, dated Apr. 8, 2015, 3 pages.
IP Australia, Examination Report No. 1 for standard patent application, Australian Patent Application No. 2015261694, dated Sep. 27, 2017, 3 pages.
Brazilian National Institute of Industrial Property, Search Report, Brazilian Patent Application No. BR112012010199-4, dated Jul. 23, 2019, 6 pages.
Canadian Intellectual Property Office, Notification of Requisition by the Examiner, Canadian Patent Application No. 2,778,997, dated Jun. 9, 2017, 7 pages.

(56) **References Cited**

OTHER PUBLICATIONS

Canadian Intellectual Property Office, Notification of Requisition by the Examiner, Canadian Patent Application No. 2,778,997, dated May 23, 2019, 5 pages.
Intellectual Property India, Examination Report, Indian Patent Application No. 3638/DELNP/2012, dated Mar. 13, 2019, 5 pages.
Japan Patent Office, Notice of Reasons for Rejection, Japanese Patent Application No. 2012-538056, dated Feb. 2, 2015, 7 pages.
Japan Patent Office, Notice of Reasons for Rejection, Japanese Patent Application No. 2015-215570, dated Oct. 24, 2016, 15 pages.
IP Australia, Patent Examination Report No. 1, Australian Patent Application No. 2014200126, dated May 27, 2016, 6 pages.
Canadian Intellectual Proprety Office, Notification of Requisition by the Examiner, Canadian Patent Application No. 2,799,505, dated Mar. 17, 2017, 5 pages.
Canadian Intellectual Proprety Office, Notification of Requisition by the Examiner, Canadian Patent Application No. 2,799,505, dated Apr. 15, 2019, 10 pages.
CNIPA, National Intellectual Property Administration, PRC, Office Action, Chinese Patent Application No. 201510151627.1, dated Feb. 22, 2017, 8 pages.
CNIPA, National Intellectual Property Administration, PRC, Office Action, Chinese Patent Application No. 201510148998.4, dated Mar. 2, 2017, 10 pages.
European Patent Office, Communication Pursuant to Article 94(3) EPC, European Patent Application No. 11 783 944.9-1124, dated Feb. 28, 2018, 4 pages.
Israel Patent Office, Office Action, Israeli Patent Application No. 222965, dated May 14, 2015, 3 pages.
Intellectual Property India, Examination Report, Indian Patent Application No. 9943/DELNP/2012, dated Jul. 30, 2019, 6 pages.
Japan Patent Office, Notice of Reasons for Rejection, Japanese Patent Application No. 2013-511205, dated Feb. 9, 2015, 5 pages.
Japan Patent Office, Decision of Rejection, Japanese Patent Application No. 2013-511205, dated Aug. 10, 2015, 4 pages.
Japan Patent Office, Appeal No. 2015-21839, Notice of Reasons for Rejection, Japanese Patent Application No. 2013-511205, dated Oct. 3, 2016, 8 pages.
Japan Patent Office, Notice of Reasons for Rejection, Japanese Patent Application No. 2015-240011, dated Jan. 4, 2017, 12 pages.
Korean Intellectual Property Office, Notice to Submit Response, Korean Patent Application No. 10-2012-7033363, dated May 4, 2015, 14 pages.
Korean Intellectual Property Office, Notice to Submit Response, Korean Patent Application No. 10-2015-7004378, dated Sep. 25, 2017, 13 pages.
Mexican Institute of Industrial Property, Requirement 1, Mexican Patent Application No. MX/a/2012/013280, dated Feb. 17, 2015, 4 pages.
Mexican Institute of Industrial Property, Requirement 2, Mexican Patent Application No. MX/a/2012/013280, dated May 27, 2015, 8 pages.
United States Patent and Trademark Office, Office Action, U.S. Appl. No. 13/101,009, dated Apr. 6, 2015, 26 pages.
United States Patent and Trademark Office, Office Action, U.S. Appl. No. 15/092,945, dated Jun. 4, 2018, 6 pages.
United States Patent and Trademark Office, Office Action, U.S. Appl. No. 15/092,945, dated Mar. 14, 2019, 15 pages.
United States Patent and Trademark Office, Applicant-Initiated Interview Summary, U.S. Appl. No. 15/092,945, dated Aug. 27, 2019, 4 pages.
IP Australia, Examination Report No. 1 for Standard Patent Application for Australian Patent Application No. 2019200358, dated Apr. 20, 2020, 3 pages.
Canadian Intellectual Property Office, Office Action for Canadian Patent Application No. 2,778,997, dated May 15, 2020, 3 pages.
David Lawson Morris, Affidavit Submitted in Federal Court of Australia Case No. NSD 438 of 2019, dated Apr. 17, 2020, 29 pages.
Susanne Monica Hantos, Affidavit Submitted in Federal Court of Australia Case No. NSD 438 of 2019, dated Apr. 21, 2020, 765 pages.
Peter Darmos, Affidavit Submitted in Federal Court of Australia Case No. NSD 438 of 2019, dated Apr. 21, 2020, 716 pages.
William Samual Hunter, Affidavit Submitted in Federal Court of Australia Case No. NSD 438 of 2019, dated Apr. 6, 2020, 158 pages.
Daniel Christopher Higgs, Affidavit Submitted in Federal Court of Australia Case No. NSD 438 of 2019, dated Apr. 6, 2020, 26 pages.
Canadian Intellectual Property Office, Office Action for Canadian Patent Application No. 2,799,505, dated Apr. 8, 2020, 4 pages.
European Patent Office, Decision to Grant a European Patent Pursuant to Article 97(1) EPC for European Patent Application No. 11783944.9, dated May 28, 2020, 2 pages.
United States Patent and Trademark Office, Notice of Allowance for U.S. Appl. No. 15/092,945, dated Mar. 16, 2020, 16 pages.

* cited by examiner

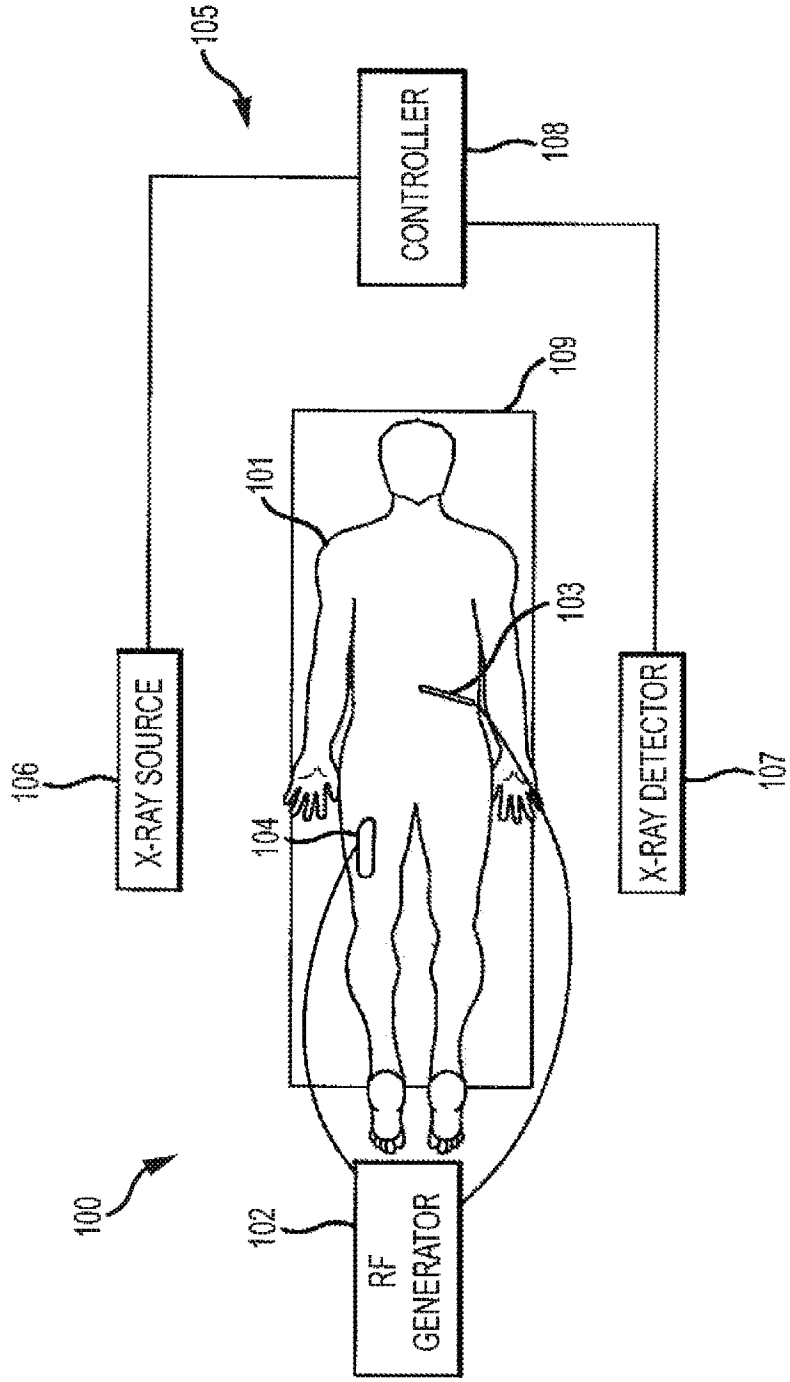
105
CONTROLLER
108
109
101
103
X-RAY SOURCE
106
X-RAY DETECTOR
107
104
100
102
RF GENERATOR

FIG. 1

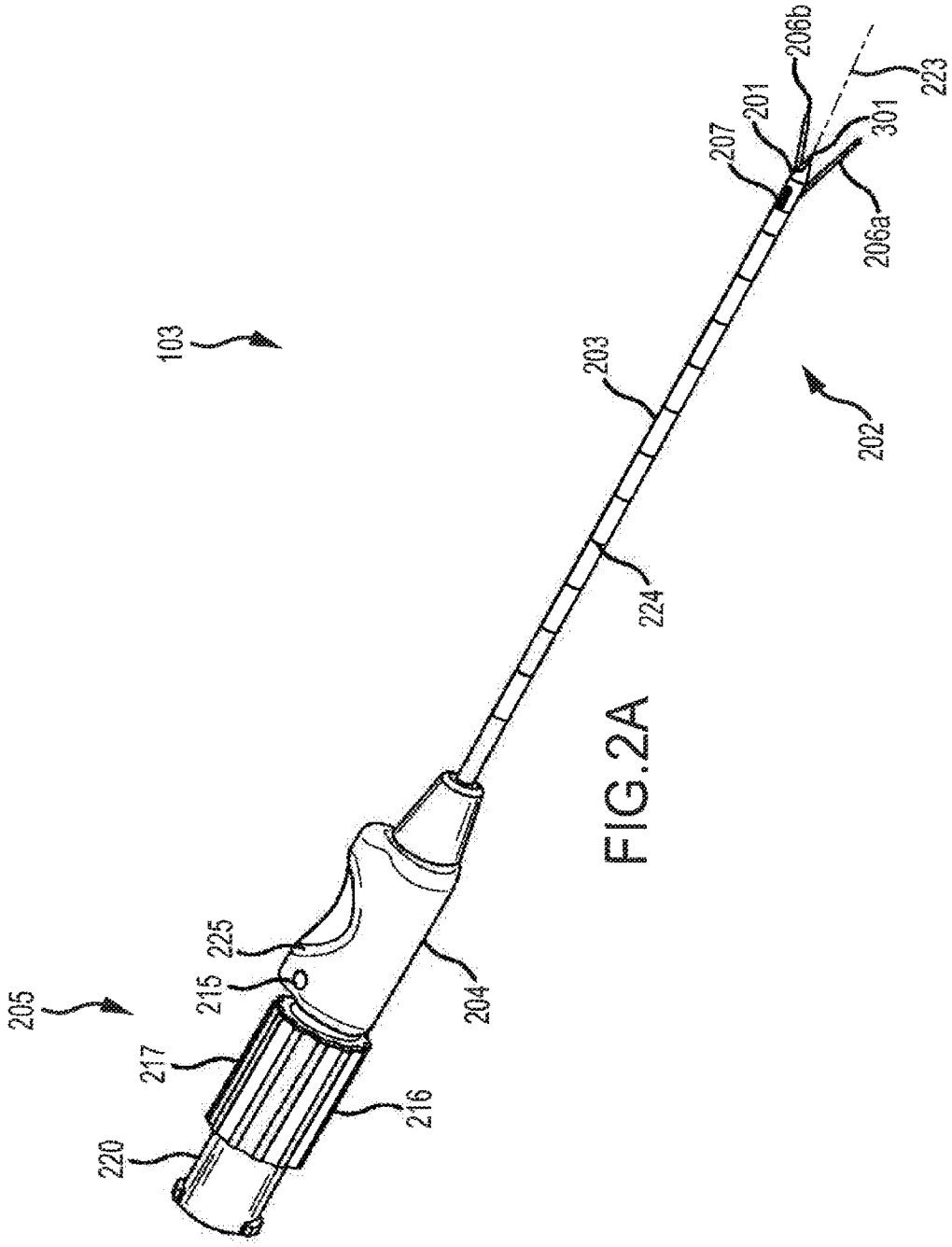
103
205
220
217
216
215
225
204
224
203
207
201
206b
206a
301
223
202

FIG.2A

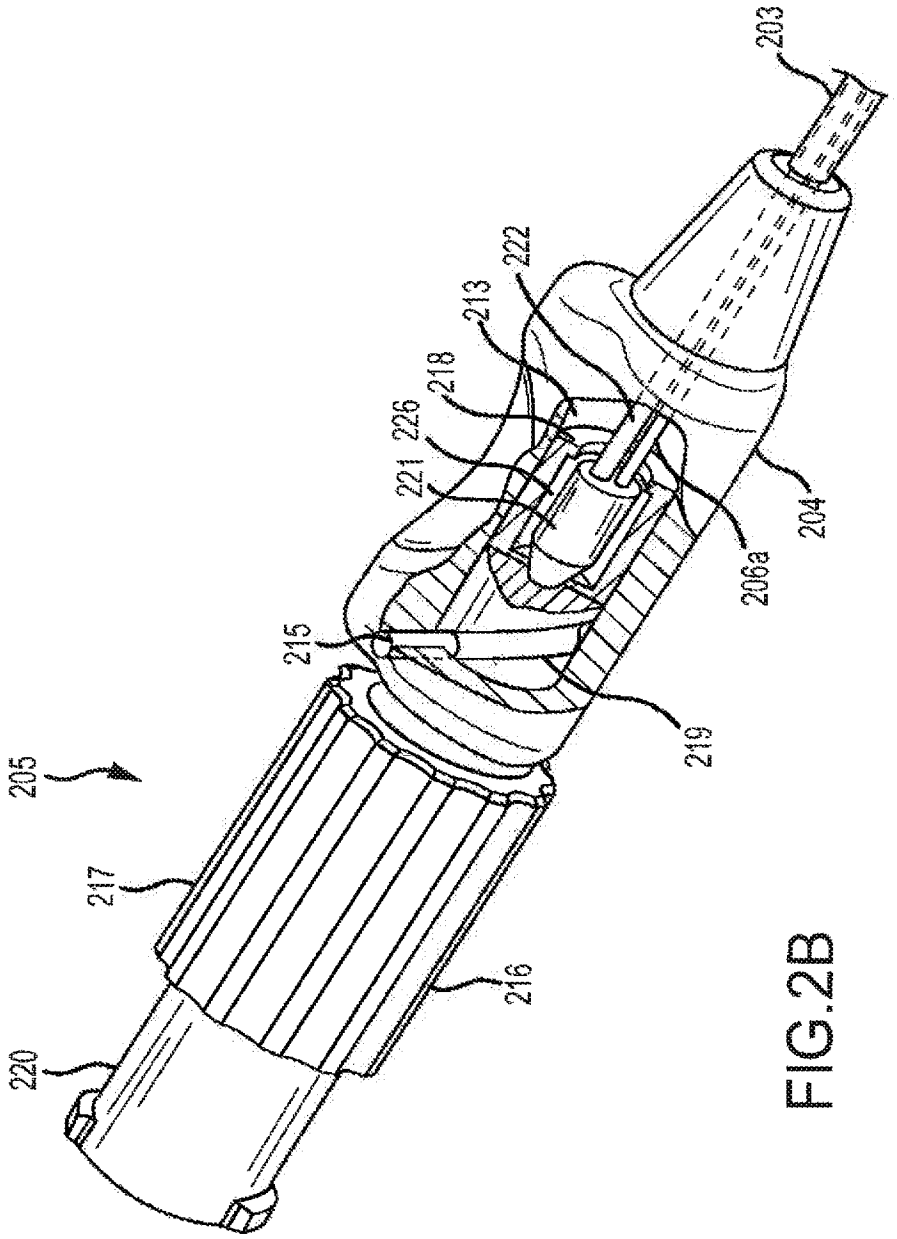

FIG.2B

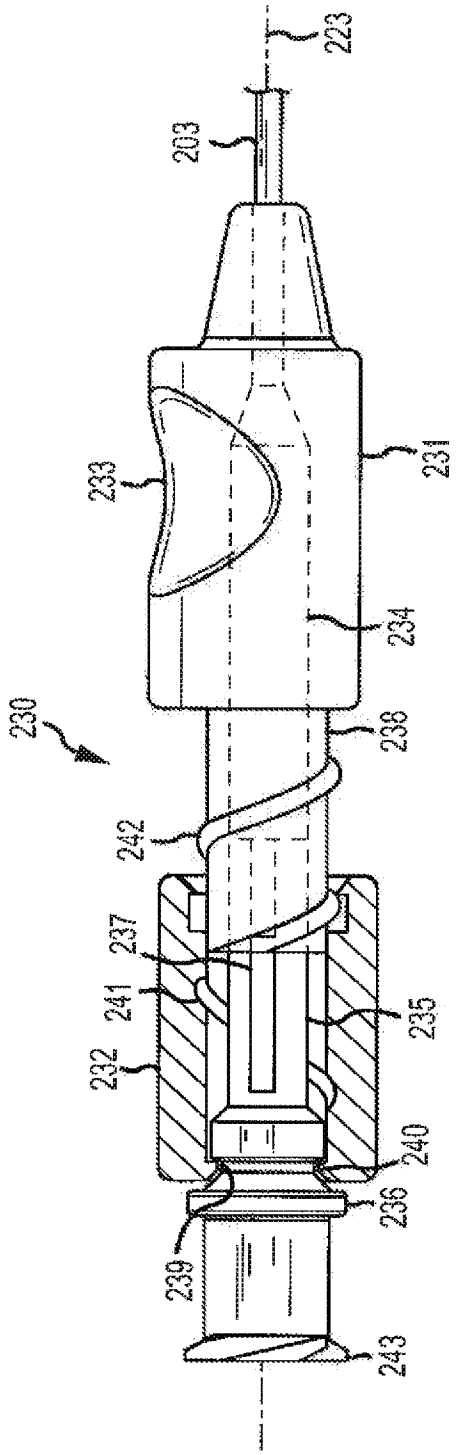

FIG.2C

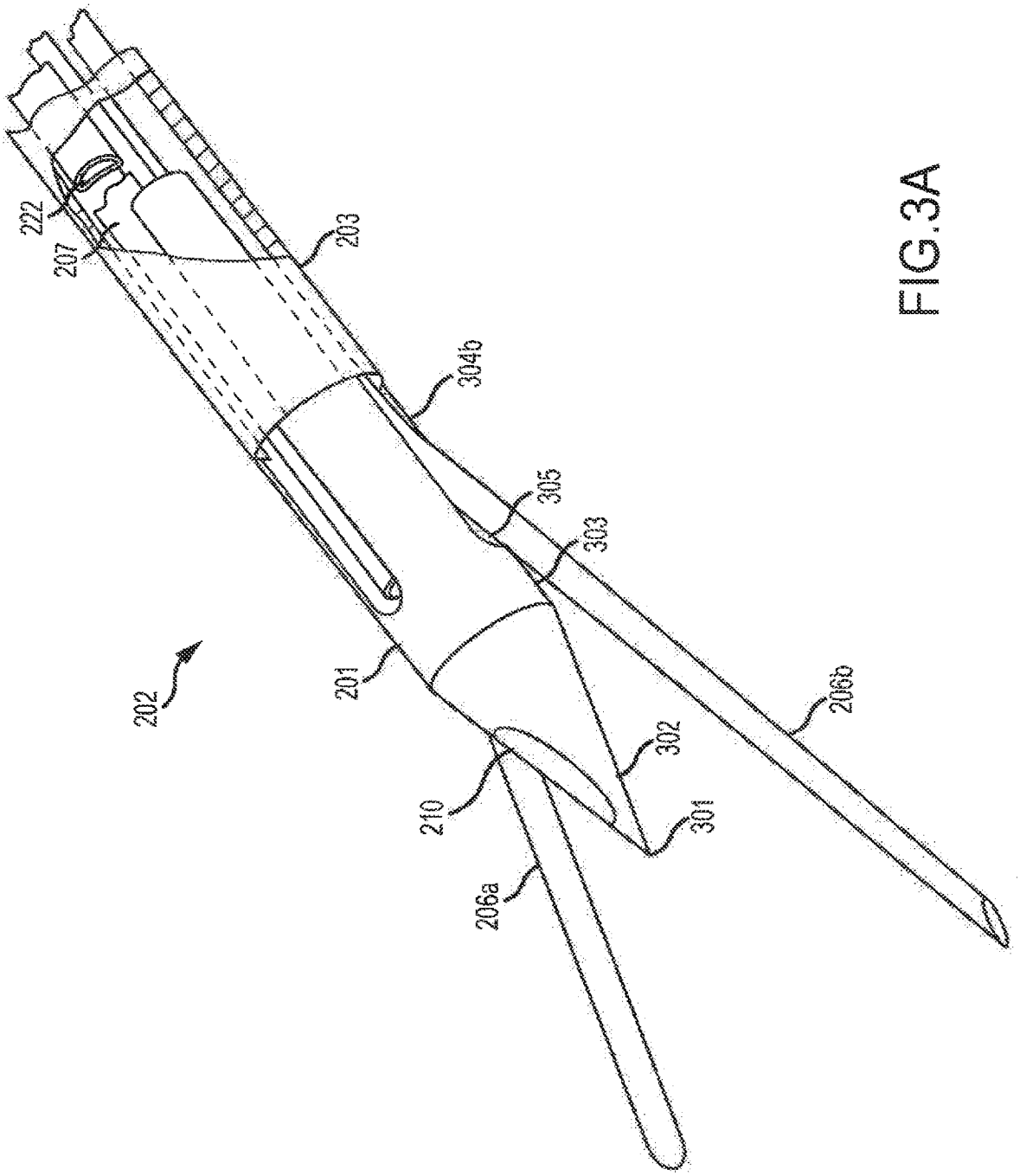

FIG.3A

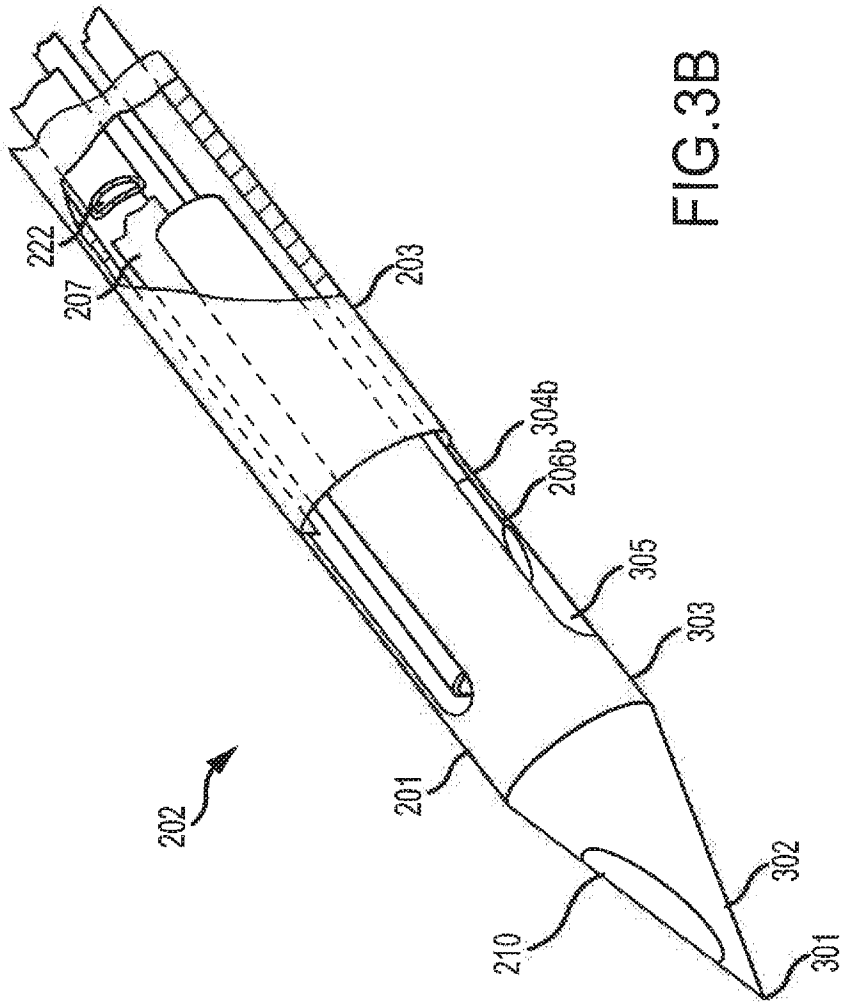

FIG.3B

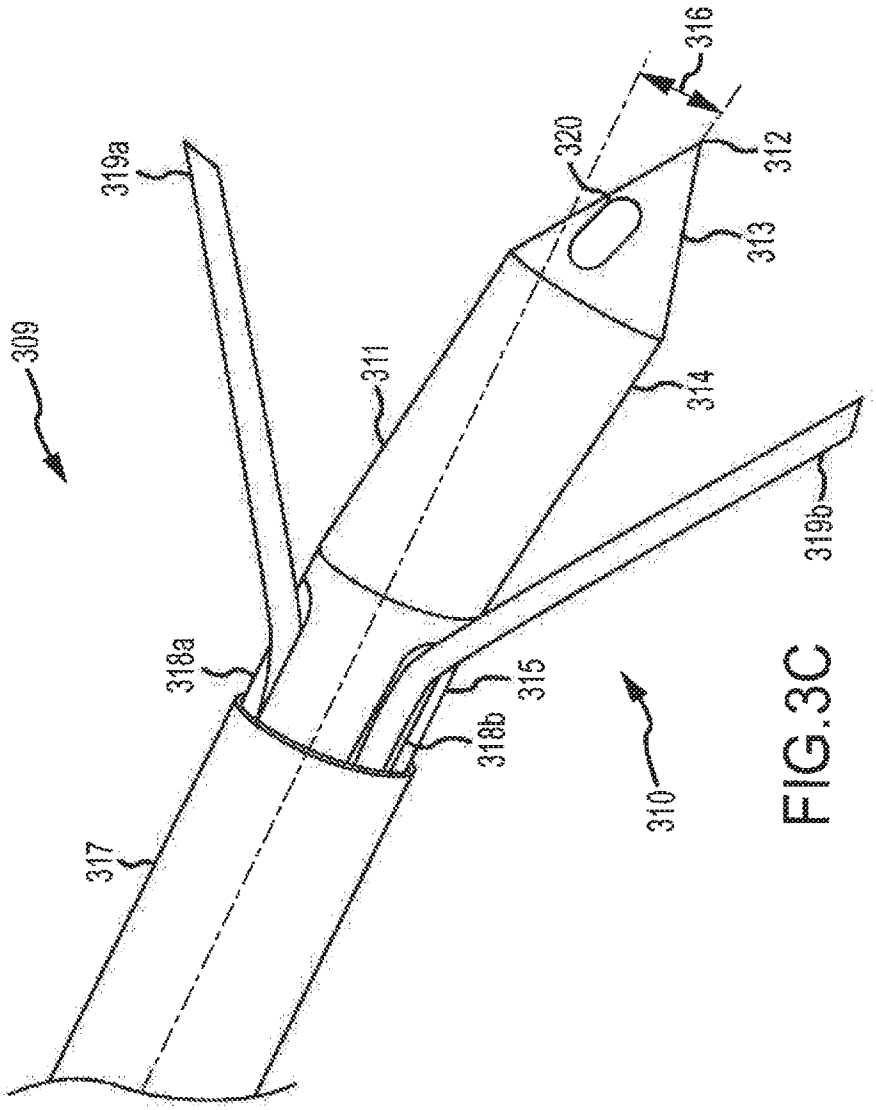

FIG.3C

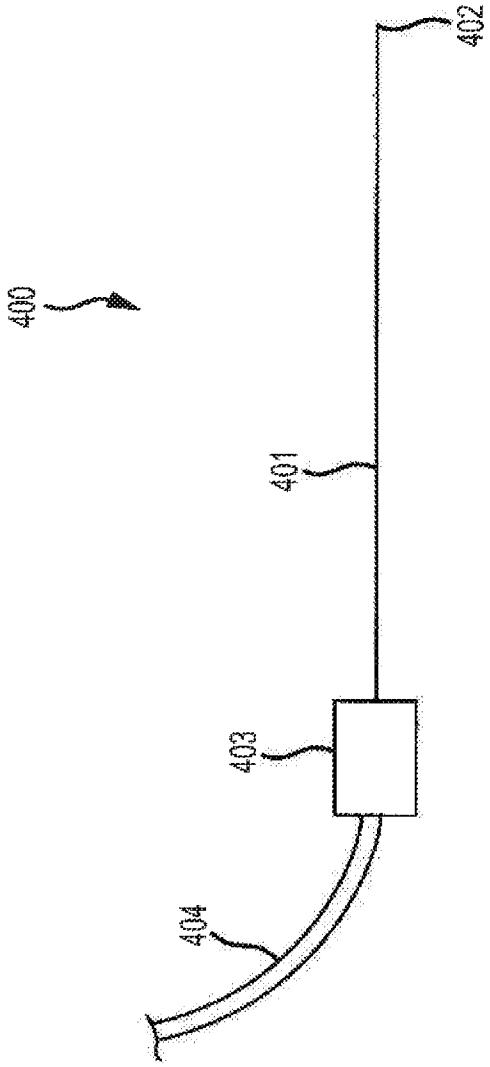

FIG.4

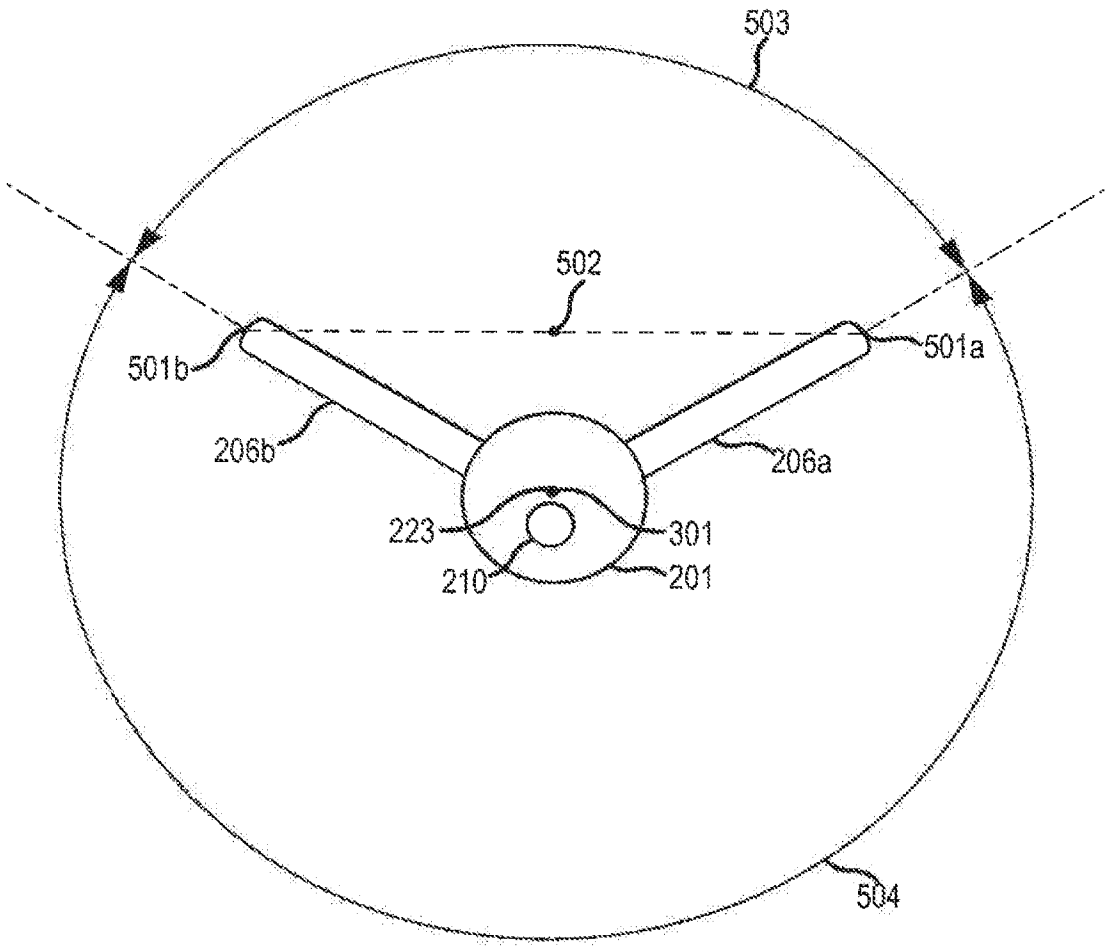

FIG.5

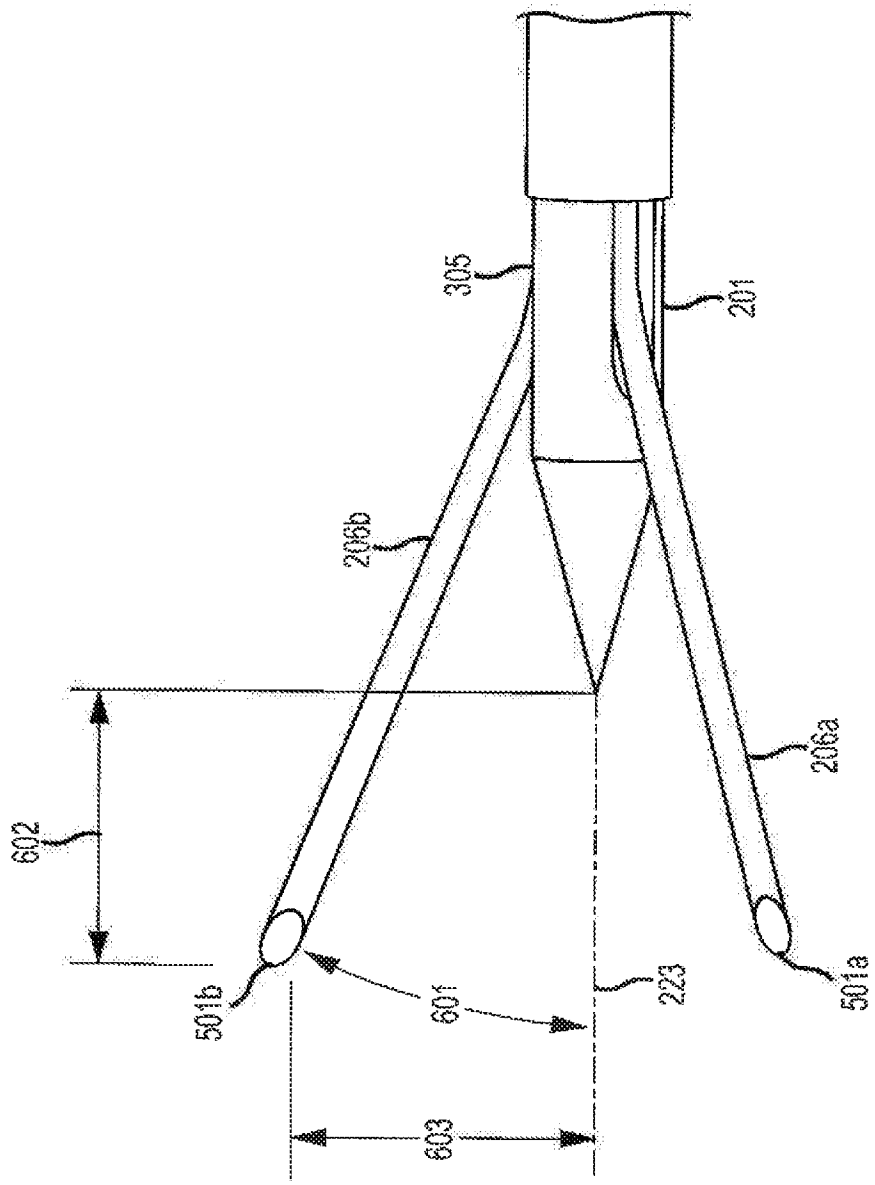

FIG.6

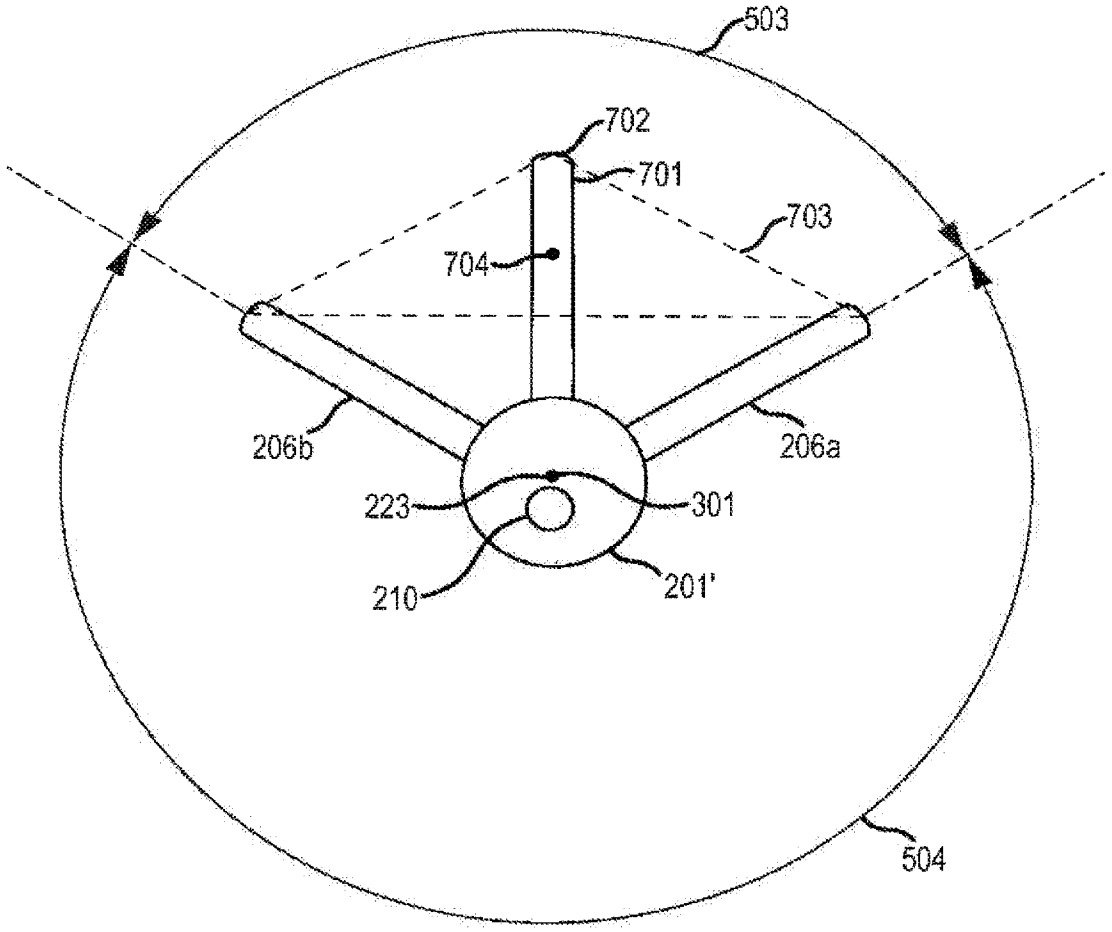

FIG.7

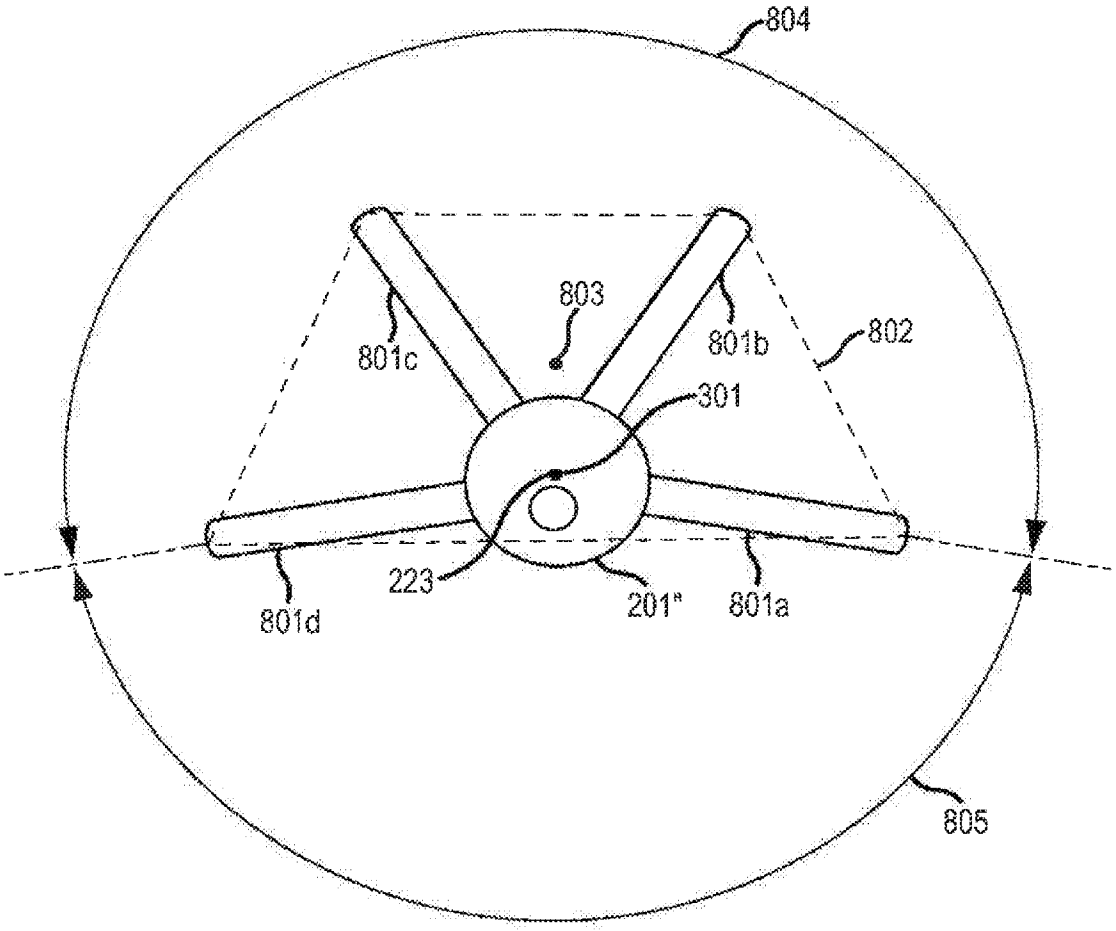

FIG.8

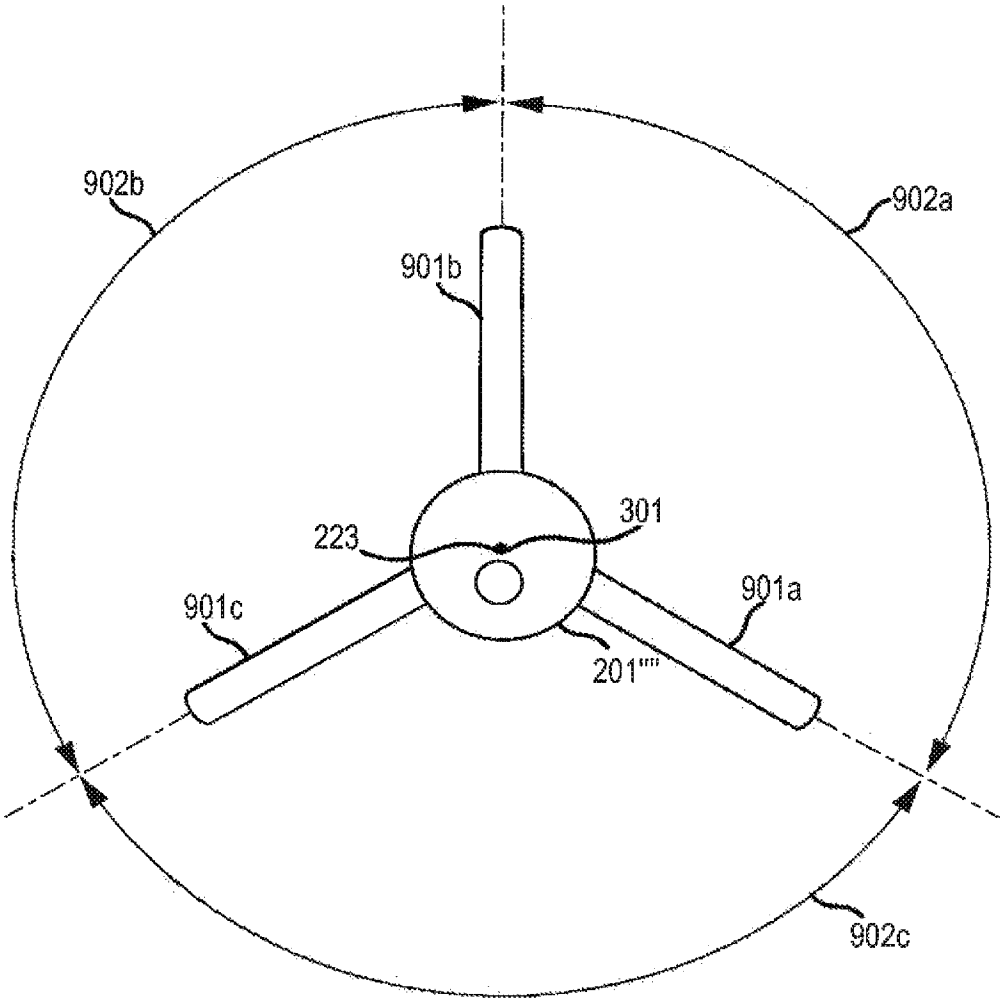

FIG.9

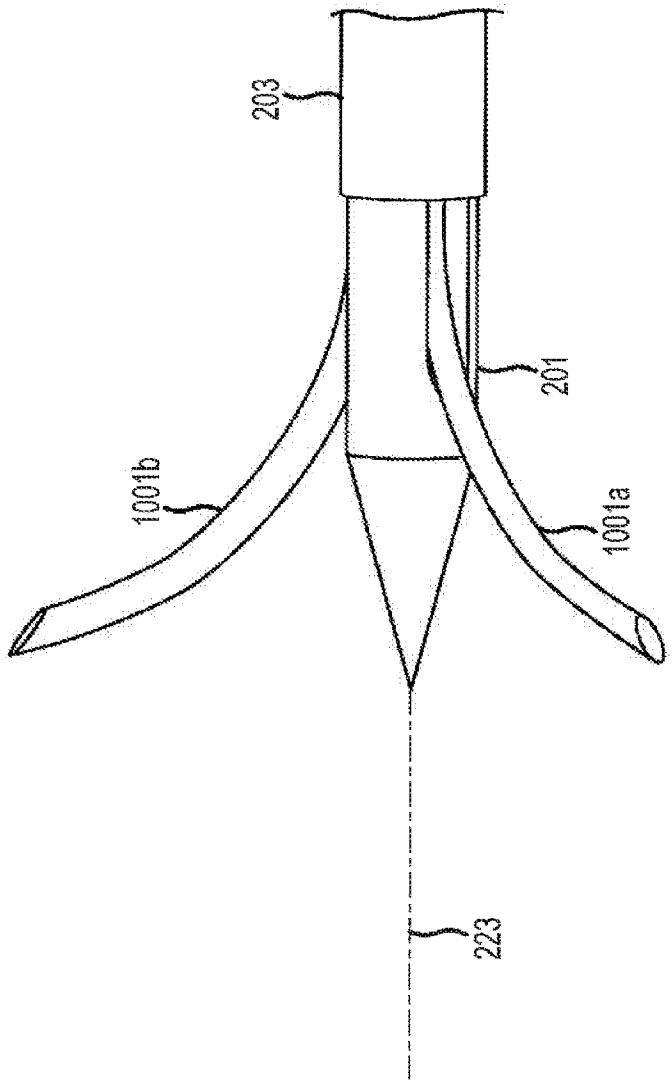

FIG.10

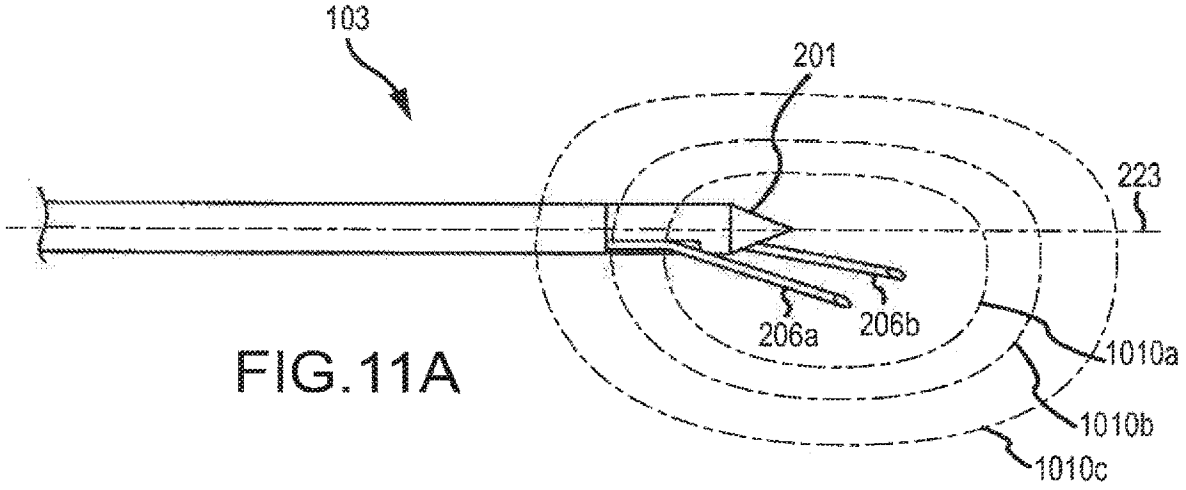

FIG.11A

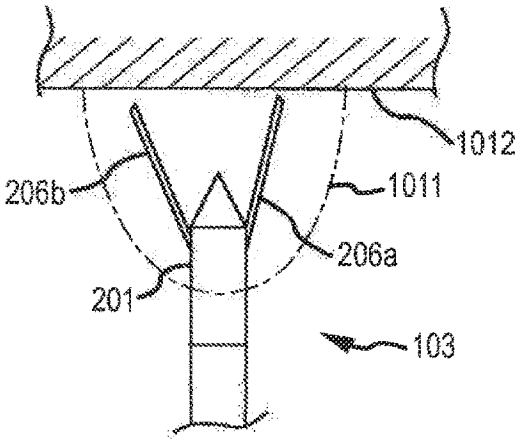

FIG.11B

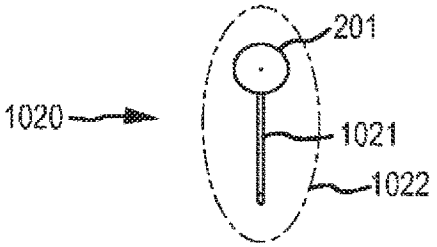

FIG.11C

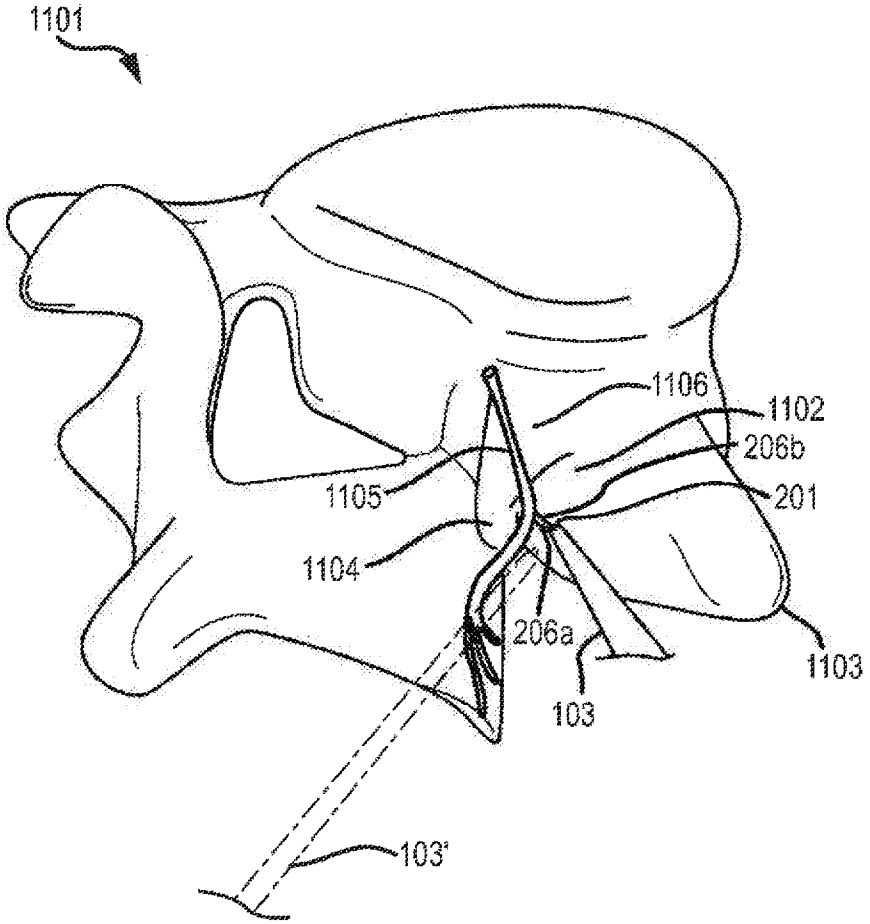

FIG.12

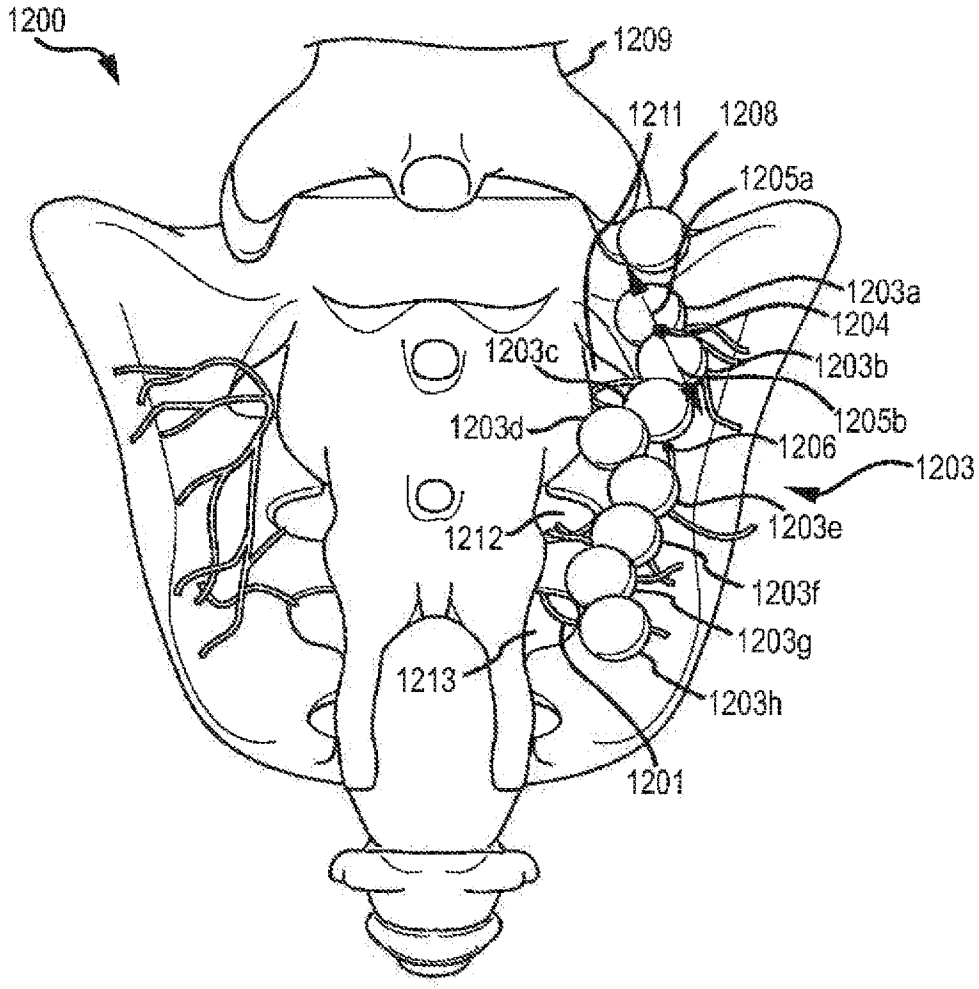
1200
1209
1211
1208
1205a
1203a
1204
1203c
1203b
1205b
1203d
1206
1203
1212
1203e
1203f
1203g
1213
1203h
1201

FIG.13

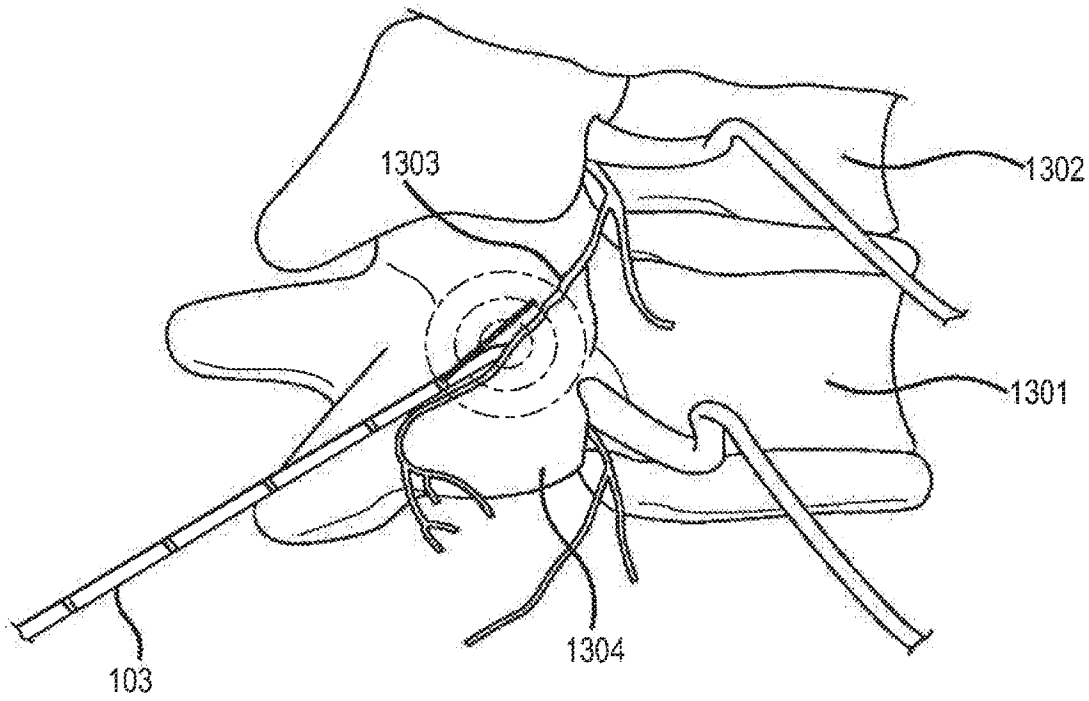

FIG.14

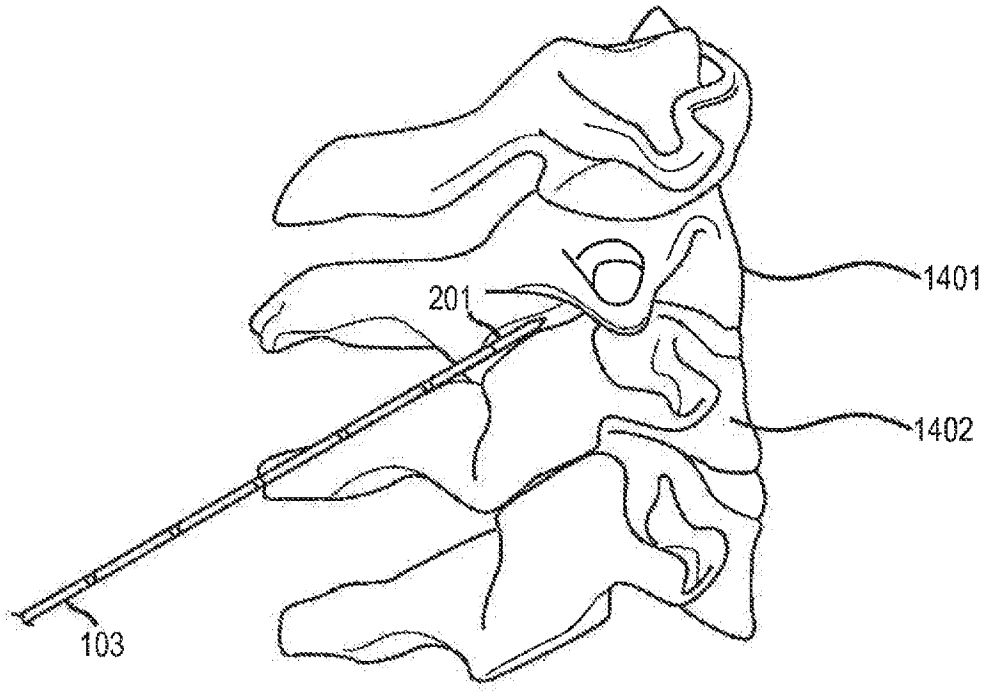

FIG.15

METHODS AND SYSTEMS FOR SPINAL RADIO FREQUENCY NEUROTOMY

RELATED APPLICATIONS

This application is a continuation of U.S. patent application Ser. No. 12/940,974, filed on Nov. 5, 2010, which is hereby incorporated by reference in its entirety and which claims the benefit of U.S. Provisional Patent App. No. 61/280,557, filed on Nov. 5, 2009, and U.S. Provisional Patent App. No. 61/347,351, filed on May 21, 2010, both of which are hereby incorporated by reference in their entirety.

FIELD OF THE INVENTION

The present invention relates to thermal ablation systems and methods and, more specifically, to improved systems and methods for performing Radio Frequency (RF) neurotomy. The invention is particularly apt for spinal RF neurotomy procedures.

BACKGROUND OF THE INVENTION

Thermal ablation involves the creation of temperature changes sufficient to produce necrosis in a specific volume of tissue within a patient. The target volume may be, for example, a nerve or tumor. A significant challenge in ablation therapy is to provide adequate treatment to the targeted tissue while sparing the surrounding structures from injury.

RF ablation uses electrical energy transmitted into a target volume through an electrode to generate heat in the area of the electrode tip. The radio waves emanate from a non-insulated distal portion of the electrode tip. The introduced radiofrequency energy causes molecular strain, or ionic agitation, in the area surrounding the electrode as the current flows from the electrode tip to ground. The resulting strain causes the temperature in the area surrounding the electrode tip to rise. Temperature calibration or measurement devices, for example thermocouples, in the electrode may provide feedback and allow precise control of the temperatures produced at the electrode tip.

RF neurotomy uses RF energy to cauterize a target nerve to disrupt the ability of the nerve to transmit pain signals to the brain. Known RF neurotomy methods typically use a single RF probe generating a generally oval or oblate spheroid lesion. The RF probe is positioned in an attempt to include the target nerve within the oval or oblate spheroid lesion. In various procedures, access to a target nerve may be limited (e.g., limited to a restricted angular range), thereby raising significant challenges to medical personnel to create sufficient lesions to provide optimal clinical outcomes. Additionally, anatomical variations of the nerve location relative to anatomical landmarks provide additional challenges.

SUMMARY OF THE INVENTION

The present invention is directed toward improved methods, systems, and related apparatuses for performing thermal ablation in general, and in particular. improved methods, systems, and related apparatuses for performing RF neurotomy, specifically in the region of the spine of a patient.

In one aspect, a needle is provided for use (e.g., insertion into a patient) during an RF ablation procedure that comprises a hub, an elongate member fixed to the hub, a tip fixed to the elongate member at a distal end thereof, and a plurality of filaments disposed within at least a portion of the elongate

member. The needle may further include an actuator interconnected to the plurality of filaments, wherein the actuator may move relative to the hub so as to move the plurality of filaments relative to the tip of the needle.

In one approach, the tip and first and second ones of the plurality of filaments are operable as a single monopolar RF electrode. By way of example, in one implementation the needle may include a lumen disposed within the elongate member, wherein the lumen and tip are configured to receive an RF probe, wherein the tip and the first and second filaments may be electrically connected to the RF probe for delivery of an RF energy signal. In another implementation, an RF probe may be integrated into the needle structure for communication of an RF signal to the tip and plurality of filaments.

In another approach, the tip and the plurality of filaments may be operable in a bipolar manner. For example, the tip and/or one or more of the plurality of filaments may be electrically interconnected to an RF energy source to combinatively operate as an active RF electrode. In turn, one or a plurality of additional ones of the plurality of filaments may be electrically interconnected to combinatively function as a return RF electrode.

In a further aspect, the actuator may be operable to move the plurality of filaments relative to the tip between a retracted position and a deployed position, wherein in the deployed position the plurality of filaments extend outwardly from the tip. In this regard, each filament may comprise a distal end, wherein in a deployed position the distal ends of the filaments each define a point, and wherein the average of all the points is offset from a central longitudinal axis of the elongate member.

In one embodiment, the average of distal end points of first and second filaments may be at midpoint between such distal ends. In certain embodiments, the distal end of each of the plurality of filaments defines a vertex of a polygon, wherein an average of corresponding points is a centroid of the polygon.

In certain embodiments, a first filament and a second filament may have corresponding distal ends which, together with a distal end of the tip, define a polygon therebetween. In this regard, in various implementations the plurality of filaments may be disposed asymmetrically about a central longitudinal axis of the elongate member in their deployed position.

In another aspect, a method for performing RF neurotomy in a patient is provided (e.g., spinal RF neurotomy), and includes the steps of moving a tip of a needle to a first position proximate to a target nerve along the spine of a patient, and after achieving the first position, advancing a plurality of filaments relative to the tip to a deployed position. After such positioning, the method may include the step of applying RF energy to the tip and/or at least one of the plurality of filaments, wherein said RF energy application generates heat to ablate at least a portion of the target nerve.

In one approach, the RF energy may be applied to the needle tip and each of the plurality of filaments to yield monopolar operation. In another approach, the RF energy may be applied to the tip and/or one or more of the plurality of filaments to define an active electrode, while one or more additional one of the plurality of filaments are electrically isolated to function as a return electrode for bipolar operation.

In relation to the present invention it is recognized that, as RF energy penetrates biological tissue, protein and water molecules oscillate in response to the RF current and the

tissue adjacent to the active needle tip heats secondary to ionic friction. As the tissue heats, and coagulates, the biophysical properties of the tissue change. These tissue changes limit penetration of the RF energy beyond a leading edge defined by the shape and size of the active needle tip. The size of a radiofrequency lesion using conventional needle technology is limited regardless of the duration of lesion or maximum temperature delivered.

The described invention overcomes this obstacle and expands the effective area of RF energy delivery by increasing the overall active tip surface area from which the RF energy emanates. The use of multiple filaments provides additional conduits for RF energy creating a multipolar RF field effect. The size and specific conformation of the RF lesion may be dictated by the location and orientation of the filaments, and may be beneficially modified to suit a specific anatomical application by changing the size, placement, and number of filaments.

Additional aspects and advantages of the present invention will become apparent to one skilled in the art upon consideration of the further description that follows. It should be understood that the detailed description and specific examples are intended for purposes of illustration only and are not intended to limit the scope of the invention. Furthermore, any of the above arrangements, features and/or embodiments may be combined with any of the above aspects where appropriate.

BRIEF DESCRIPTION OF THE DRAWINGS

For a more complete understanding of the present invention and further advantages thereof, reference is now made to the following Detailed Description of the Invention taken in conjunction with the accompanying drawings, wherein:

FIG. **1** is a schematic diagram of an RF neurotomy system being used to perform RF neurotomy on a patient.

FIG. **2**A is a perspective view of a needle that may be used in an RF neurotomy procedure.

FIG. **2**B is a cut away perspective view of a portion of the needle of FIG. **2**A.

FIG. **2**C is a cut away view of a portion of an alternate embodiment of a needle that may be used in an RF neurotomy procedure.

FIG. **3**A is a detailed view of a tip of the needle of FIG. **2**A with filaments disposed in a fully deployed position.

FIG. **3**B is a detailed view of a tip of the needle of FIG. **2**A with filaments disposed in a retracted position.

FIG. **3**C is a detailed view of an alternate tip of the needle of FIG. **2**A with filaments disposed in a deployed position.

FIG. **4** is a schematic diagram of an RF probe assembly.

FIG. **5** is an end view of the needle of FIG. **2**A.

FIG. **6** is a side view of the tip of the needle of FIG. **2**A.

FIG. **7** is an end view of another alternate embodiment of the needle of FIG. **2**A.

FIG. **8** is an end view of another alternate embodiment of the needle of FIG. **2**A.

FIG. **9** is an end view of another alternate embodiment of the needle of FIG. **2**A.

FIG. **10** is a side view of another alternate embodiment of the needle of FIG. **2**A.

FIG. **11**A is an illustration of an exemplary set of isotherms that may be created with the needle of FIG. **2**A.

FIG. **11**B is an illustration of an exemplary lesion that may be created with the needle of FIG. **2**A.

FIG. **11**C is an illustration of an exemplary lesion that may be created with a single-filament needle.

FIG. **12** is a perspective view of the needle of FIG. **2**A positioned relative to a lumbar vertebra for performing RF neurotomy.

FIG. **13** is an illustration of a sacrum including target lesion volumes for performing Sacroiliac Joint (SIJ) RF neurotomy.

FIG. **14** is a perspective view of the needle of FIG. **2**A positioned relative to a thoracic vertebra for performing RF neurotomy.

FIG. **15** is a perspective view of the needle of FIG. **2**A positioned relative to the C2/3 cervical zygapophyseal joint (z joint) for performing cervical medial branch RF neurotomy on the third occipital nerve.

DETAILED DESCRIPTION OF THE INVENTION

In the following description, the invention is set forth in the context of apparatus and methods for performing RF ablation. More particularly, the systems and methods may be used to perform RF neurotomy to ablate portions of target nerves. Even more particularly, the systems and methods may be used to perform spinal RF neurotomy to ablate portions of target nerves along the spine of a patient to relieve pain. For example, embodiments of methods and apparatuses described herein relate to lumbar RF neurotomy to denervate a facet joint between the L4 and L5 lumbar vertebrae. Denervation is achieved by application of RF energy to a portion of a medial branch nerve to ablate or cauterize a portion of the nerve, thus interrupting the ability of the nerve to transmit signals to the central nervous system. In another example, embodiments described herein relate to sacroiliac joint RF neurotomy.

FIG. **1** is an illustration of an RF neurotomy system **100** for performing RF neurotomy on a patient **101**. The patient **101** may be positioned face down on a table **109** or surface to allow access along the spine of the patient **101**. The table **109** may be made of radiolucent materials substantially transparent to x-rays, such as carbon fiber.

The system **100** may include an RF generator **102** capable of generating an RF energy signal sufficient to ablate target tissue (e.g. cause lesions in targeted volumes; cauterize targeted portions of target nerves). The RF generator **102** may, for example, be capable of delivering RF energy of about 460,000-500,000 Hz. A needle **103** capable of conducting (e.g., transmitting or directing) RF energy may be interconnected to the RF generator **102** and may be used to deliver an RF energy signal to a specific site within the patient **101**. Where the needle **103** is a monopolar device, a return electrode pad **104** may be attached to the patient **101** to complete a circuit from the RF generator **102**, through the needle **103**, through a portion of the patient **101**, and back to the RF generator **102** through the return electrode pad **104**. In other bipolar arrangements the needle **103** may comprise at least one supply electrode and at least one return electrode to define the circuit.

The RF generator **102** may be operable to control the RF energy emanating from the needle **103** in a closed-loop fashion. For example, the needle **103** and/or an RF probe disposed within the needle **103** may contain a temperature measurement device, such as a thermocouple, to measure the temperature at the target tissue. Data may also be available from the RF generator **102**, such as power level and/or impedance, which may also be used for closed-loop control of the needle **103**.

Turning to FIG. **4**, an exemplary RF probe assembly **400** compatible with the needle **103** is illustrated. The RF probe

assembly **400** includes an RF probe **401** that may be inserted into a patient (e.g., through needle **103**) and may direct RF energy to the target tissue. The RF probe **401** may include a thermocouple operable to measure temperature at a distal end **402** of the RF probe **401**. The RF probe assembly **400** may include a connector **403** and a cable **404** for use in connecting the RF probe **401** to the RF generator **102**.

Returning to FIG. **1**, the system **100** may include an imaging system **105** capable of producing internal images of the patient **101** and the needle **103** to facilitate navigation of the needle **103** during a procedure. The system **100** may further include a display for displaying the generated images to a physician performing the RF ablation procedure. In one example, the imaging system **105** may be a fluoroscope capable of generating real-time two dimensional images of the needle **103** and internal structures of the patient **101**. As such, the imaging system may include an X-ray source **106**, an X-ray detector **107** and a controller **108**. The X-ray source **106** and X-ray detector **107** may be mounted on a movable structure (e.g., a C-arm), to facilitate capturing a variety of images of the patient **101** (e.g., at various angles or projection views). Alternatively, the imaging system **105** may be any other appropriate imaging system, such as, for example, a computed tomography (CT) scanner.

FIG. **2**A is a detailed view of the needle **103** of the system **100** for performing RF neurotomy. The needle **103** may include a tip **201** that tapers to a point **301** capable of piercing the skin of a patient. The needle **103** may further include an elongate member **203** connected to the tip **201** at a distal end **202** of the needle **103** and connected to a hub **204** at a proximal end **205** of the needle **103**. The needle **103** includes a central longitudinal axis **223** that is disposed along the center of the elongate member **203**.

The needle **103** may include a self-contained mechanical mechanism, in the form of deployable filaments **206***a*, **206***b*, operable to expand the volume of effective RF energy delivery as compared to known single-electrode RF probes. The filaments **206***a*, **206***b* may be at least partially disposed within the elongate member **203** and may be operable to emerge through a side wall of the needle **103** proximate to the distal end **202** of the needle **103**. Alternatively, the needle **103** may include a single filament or three or more filaments. The filaments **206***a*, **206***b* allow offsetting and/or contouring of the lesion geometry produced using the needle **103** to match a desired target volume. The filaments **206***a*, **206***b* may be deployable and/or retractable by moving an actuator **216** relative to the hub **204**.

As will be further described, the needle **103** may further include a tube **207** that includes a lumen therethrough. The lumen may be used to transport fluids to and/or from the target volume. The lumen may also accept the RF probe **401** for delivery of RF energy to the target volume. In an alternate embodiment, the RF probe **401** may be integrated into the needle **103**. In such an embodiment, the tube **207** need not be present for RF energy delivery, although it may be included to facilitate fluid delivery. The filaments **206***a*, **206***b* may include lumens therethrough for the transportation of fluid to and/or from the target volume. The filaments **206***a*, **206***b* may function as thermocouples.

As RF energy penetrates biological tissue, protein and water molecules oscillate in response to the RF current and the tissue adjacent to the RF electrode is heated. As the tissue heats and coagulates, the biophysical properties of the tissue change. These tissue changes limit penetration of the RF energy beyond a leading edge defined by the shape and size of an active needle tip. Accordingly, the size of a radiofrequency lesion using conventional single needle technology is thus practically limited after achievement of a certain temperature delivered for a certain time.

The needle **103** with deployable filaments **206***a*, **206***b* overcomes this obstacle and expands the effective area of RF energy delivery by providing multiple locations (e.g., tip **201** and filaments **206***a*, **206***b*) from which the RF energy emanates. The use of multiple filaments **206***a*, **206***b* provides additional conduits for RF energy creating a multiple electrode RF field effect. The size, shape and location of a lesion created with the needle **103** may be established by the quantity, location and orientation of the filaments, and may be beneficially modified to suit a specific anatomical application by changing various aspects of the filaments as discussed below.

Where it is desired to create a lesion offset from the central longitudinal axis **223**, the lesion may be preferentially offset in a desired direction from the central longitudinal axis **223** by rotationally orienting the needle **103**. Moreover, the needle **103** may be used to create a lesion offset from the central longitudinal axis **223** in a first direction. Then, the filaments **206***a*, **206***b* may be retracted, the needle **103** rotated, and the filaments **206***a*, **206***b* redeployed to create a lesion offset from the central longitudinal axis **223** in a second direction.

FIGS. **3**A and **3**B are detailed views of the distal end **202** of the needle **103** that includes the tip **201**. The tip **201** may include the sharpened point **301** for piercing the skin of a patient and facilitating advancement through tissue. The tip **201** may further include a tapered portion **302** that transitions the tip **201** from the point **301** to a body portion **303**. The body portion **303** is the portion of the tip **201** that is disposed proximal to the tapered portion **302**. The body portion **303** may be cylindrical as illustrated, or it may be of any other appropriate shape. The body portion **303** may have a cross-section that coincides with the cross section of the elongate member **203**.

The tip **201** may act as an RF energy delivery element. As such, the tip **201** may be made from a conductive material such as, for example, stainless steel. The tip **201** may be coated. The tip **201** material and optional coating may be selected to improve radiopacity, improve and/or alter RF energy conduction, improve lubricity and/or reduce tissue adhesion.

The tip **201** may include filament port or slot **304***a* (not visible in the views of FIGS. **3**A and **3**B) and filament port or slot **304***b*. The geometry of the filament slots **304***a*, **304***b* may be selected to allow filaments **206***a*, **206***b* to be adequately retracted (e.g., such that they are disposed within a cross-sectional envelope of the body portion **303** of the tip **201**) while the needle **103** is inserted into the body, so that the filaments **206***a*, **206***b* do not cause any unintended damage to the patient. Such positioning of the filament slots **304***a*, **304***b* avoids having filament exit features on the tapered portion **302** and thus avoids potential coring that could be caused by such positioning.

The internal geometry of the filament slots **304***a*, **304***b* may be designed such that the filaments **206***a*, **206***b* may be easily retracted and advanced. For example, the internal geometry of the filament slots **304***a*, **304***b* may include a transition region **305** that meets the outer surface of the body portion **303** at an angle of about 30 degrees. The transition region **305** may, for example, be curved or planar. Thus, when the filaments **206***a*, **206***b* are in the form of a member without a pre-set bias (e.g., substantially straight), advancement of the filaments **206***a*, **206***b* relative to the filament slots **304***a*, **304***b*, will cause the filaments **206***a*, **206***b* to be deflected outwardly as the filaments **206***a*, **206***b* move

distally along the transition region **305**. Depending on the positioning of the transition region **305** relative to where the filaments **206***a*, **206***b* are confined (e.g., in the needle **103** of FIG. **3**A the filaments **206***a*, **206***b* are confined to only longitudinal movement where they enter into the elongate member **203**) and on the mechanical properties of the filaments **206***a*, **206***b*, various deployment angles of the filaments **206***a*, **206***b* relative to the central longitudinal axis **223** may be achieved. Generally, the portions of the filaments **206***a*, **206***b* that extend outwardly away from the filament slots **304***a*, **304***b* may be unrestrained and thus may take any appropriate form. For example, where there is no pre-set bias, the portions of the filaments that extend outwardly away from the filament slots (and therefore from the tip) may be substantially straight, such as shown in FIGS. **2**A, **3**A, **3**C, **6**, **11**A-**11**C and **14**. Where a pre-set bias is present, the portions of the filaments that extend outwardly away from the filament slots may take any appropriate shape, such as, for example, curved as shown in FIG. **10**.

The radial orientation of the filament slots **304***a*, **304***b* may be selected such that a center point between the filament slots **304***a*, **304***b* does not coincide with the central longitudinal axis **223**. For example, as shown in FIGS. **2**A, **3**A and **3**B, the filament slots **304***a*, **304***b* may be positioned such that they are about 120 degrees apart about the circumference of the tip **201**. Other filament slot configurations may be configured to achieve the filament placements discussed below. These configurations may be achieved by varying the quantity of filament slots, the placement of filament slots about the circumference of the tip **201**, and/or the placement of filament slots along the center longitudinal axis **223** to achieve the filament placements discussed below.

As noted above, and illustrated in FIGS. **3**A and **3**B, the needle **103** may comprise a tube **207** that includes a lumen **222** therethrough. The lumen **222** may be employed to accept the RF probe **40** for delivery of RF energy and/or for the transport of fluids. In this regard, the tip **201** may further include a fluid port **210** that may be in fluid communication via a channel through the tip **201** with the lumen **222**. The fluid port **210** may be centrally located or it may be located offset from the center longitudinal axis **223** as shown in FIGS. **2**A and **3**A. The fluid port **210** may be used to transfer fluid between the region of the tip **201** and the proximal end **205** of the needle **103**. For example, during an RF neurotomy procedure, an anesthetic and/or an image enhancing dye may be introduced into the region of tissue around the tip **201** through the fluid port **210**. In an alternate embodiment, the fluid port **210** may be located along the body portion **303** of the tip **201**.

As may be appreciated, the channel through the tip **201** may be sized to accommodate a tip of the RF probe **401** that may be inserted into the needle **103**. The channel may be sized such that RF energy from the inserted RF probe **401** is satisfactorily passed from the RF probe **401** to the tip **201** and filaments **206***a*, **206***b*.

The elongate member **203** may be in the form of a hollow tube (e.g., sheath, cannula) interconnecting the tip **201** with the hub **204**. The elongate member **203** may be configured with adequate strength to allow the needle **103** to pierce the patient's skin and advance to a target area through various tissue types, including, for example, fat and muscle tissue. The elongate member **203** may also be capable of resisting kinking as it is advanced. In an alternate embodiment, the elongate member **203** may be a rod with a plurality of lumens along its length to accommodate filaments **206***a*, **206***b*, the RF probe **401**, and/or a fluid passage.

The elongate member **203** houses portions of the filaments **206***a*, **206***b* and the tube **207**, and allows for relative movement of the filaments **206***a*, **206***b*. The elongate member **203** may be of any appropriate size and internal configuration to allow insertion into the patient **101** and to house componentry therein. In an exemplary embodiment, the elongate member **203** may, for example, be a 16 gauge round tube or smaller. For example, the elongate member **203** may be 18 or 20 gauge. For example, the elongate member may have a maximum cross dimension of at most about 1.7 mm. In another example, the elongate member may have a maximum cross dimension of at most about 1 mm. The elongate member **203** may have a length selected for performing a specific spinal RF neurotomy procedure on a particular patient. The elongate member **203** may be constructed from an insulative material to reduce the amount of RF energy emitted along the length of the elongate member **203** when the RF probe **401** is disposed therein. For example, the elongate member **203** may be constructed from polymeric, ceramic or other insulative material. The elongate member **203** may include a coating that may improve radiopacity to aid in visualization of the position of the needle **103** using fluoroscopy. The elongate member **203** may include a coating to improve its insulative properties. The elongate member **203** may include a lubricious coating to improve its ability to be inserted and positioned within the patient and to reduce tissue adhesion. The elongate member **203** may include markers **224** along its length to assist in determining the depth to which the needle **103** has entered into the anatomy. Such markers **224** may be radiopaque so that they may be viewed under fluoroscopy. A collar (not shown) may be disposed about the elongate member **203** to assist in placement of the tip **201** of the needle **103**. For example, the tip **201** may be positioned in a first position, the collar may then be placed against the patient's **101** skin, and then the needle **103** may be withdrawn a certain distance. Such a distance will be indicated by the distance between the collar and the patient's **101** skin.

The elongate member **203** may be fixedly interconnected to the tip **201** and hub **204** in any appropriate manner. For example, the tip **201** may be press fit into the elongate member **203** and the elongate member **203** may be press fit into the hub **204**. Other possible methods of attachment include adhesive bonding and welding. In an alternate embodiment, the elongate member **203** and the tip **201** may be a single unitary structure. The elongate member **203** may be steerable and incorporate controlling mechanisms allowing the elongate member **203** to be deflected or steered after insertion into the anatomy.

The tube **207** containing the lumen **222** may be constructed from any appropriate material. For example, the tube **207** may be constructed from a conductive material, such as stainless steel, such that when the RF probe **401** is inserted within the tube **207**, the RF energy emitted by the RF probe **401** may be conducted through the tube **207** and into and through the tip **201** and filaments **206**A, **206***b*. The tube **207** may be interconnected to the tip **201** such that the lumen **222** is in sealed, fluid communication with the channel through the tip **201**. This may be accomplished by a press fit, weld, or any other appropriate method.

As noted, the lumen **222** may be in fluid communication with the tip **201** at the distal end **202**. A proximal end of the lumen **222** may be disposed at the proximal end **205** of the needle **103**. In this regard, the lumen **222** may run from the distal end **202** to the proximal end **205** with the only access being at the distal and proximal ends. Furthermore, the

lumen **222** may be the only lumen of the needle **103** disposed along the elongate member **103**.

Accordingly, the RF probe **401** inserted into the lumen **222** may be positioned such that an end of the RF probe **401** is proximate the tip **201**. For example, the RF probe **401** may be positioned such that the distal end **402** of the RF probe **401** is in the lumen **222** near the tip **201** or in the channel through the tip **201**. Thus, RF energy transmitted through the RF probe **401** may be conducted by the tip **201** and filaments **206***a*, **206***b*. The size of the lumen **222** may be selected to accommodate a particular size of RF probe **401**. For example, for a 22 gauge RF probe **401**, at least a 21 gauge or larger lumen **222** may be employed. For example, the lumen **222** may have a maximum cross-dimension of less than about 0.85 mm.

The proximal end of the tube **207** may be operable to receive the RF probe **401**. Moreover, the proximal end of the tube **207** and the actuator **216** may be configured to accept a connector, such as a Luer fitting, such that a fluid source may be connected to the tube **207**.

As illustrated in FIGS. **2**A and **3**A, the needle **103** includes two filaments **206***a*, **206***b* disposed within and along elongate member **203**. Distal ends of the filaments **206***a*, **206***b* are disposed proximate to the tip **201** and proximal ends of the filaments **206***a*, **206***b* are fixed to a filament hub **221** discussed below. The filaments **206***a*, **206***b* are movable along the central longitudinal axis **223** between a fully deployed position as illustrated in FIGS. **2**A and **3**A and a retracted position illustrated in FIG. **3**B. Moving the filaments **206***a*, **206***b* distally from the retracted position moves the filaments **206***a*, **206***b* toward the fully deployed position, while moving the filaments **206***a*, **206***b* proximally from the deployed position moves the filaments **206***a*, **206***b* toward the retracted position. The filaments **206***a*, **206***b* may be deployed in intermediate positions between the fully deployed positions and the retracted positions.

In the fully deployed position as shown in FIG. **3**A, the distal ends of the filaments **206***a*, **206***b* are disposed away from the tip **201**. In the refracted position as shown in FIG. **3**B, the distal ends of the filaments **206***a*, **206***b* are disposed entirely within an outer perimeter (e.g., circumference where the non-tapered portion **303** of the tip **201** is round) of the tip **201**. In the deployed position, the filaments **206***a*, **206***b* act as broadcast antennae for the RF probe **401** (e.g., RF energy passes from the RF probe **401** to tip **201** and filaments **206***a*, **206***b*, and into a target volume within the patient **101**). In this regard, together, the RF probe **401** inserted into the lumen **222**, the tip **201**, and the filaments **206***a*, **206***b*, may form a monopolar electrode for application of RF energy to the target volume. The filaments **206***a*, **206***b* allow the RF energy from the RF probe **401** to be dispersed over a larger volume than would be possible with the tip **201** alone.

The filaments **206***a*, **206***b* may be constructed from a material operable to conduct RF energy, e.g., a metal such as stainless steel, Nitinol or shape memory alloy. The filaments **206***a*, **206***b* may be coated to enhance their ability to conduct RF energy. The filaments **206***a*, **206***b* may include a lubricious coating to aid in insertion and/or reduce tissue adhesion. The distal ends of the filaments **206***a*, **206***b* may be shaped (e.g., pointed) to improve their ability to move through tissue.

The positioning of the filaments **206***a*, **206***b* of the embodiment illustrated in FIGS. **2**A and **3**A will now be described in relation to FIG. **5**. FIG. **5** is an end view of the tip **201** and deployed filaments **206***a*, **206***b* of the embodiment illustrated in FIGS. **2**A and **3**A. The filaments **206***a*, **206***b* are positioned at a filament angle **503** of about 120 degrees apart from each other about the central longitudinal axis **223**. This coincides with the positions of the filament slots **304***a*, **304***b* discussed above since the filaments **206***a*, **206***b* emerge from the filament slots **304***a*, **304***b*. Accordingly, a filament-free angle **504** of about 240 degrees is defined as the largest angle about the circumference of the tip **201** that is free of filaments **206***a*, **206***b*. In an embodiment consisting of two filaments, the filament angle **503** may be less than 180 degrees and the filament-free angle **504** may be correspondingly greater than 180 degrees (e.g., greater than 200 degrees or greater than 240 degrees).

In FIG. **5**, the central longitudinal axis **223** is perpendicular to the plane of the illustration. A midpoint **502** is defined between distal ends **501***a*, **501***b* of the filaments **206***a*, **206***b*, respectively. The midpoint **502** is offset from the central longitudinal axis **223**. For example, in an embodiment, the midpoint **502** may be offset from the central longitudinal axis **223** by about 2 mm. Accordingly, when RF energy is transmitted from the tip **201** and filaments **206***a*, **206***b*, it will be transmitted asymmetrically with respect to the central longitudinal axis **223** as energy will be emitted from the tip **201** and the filaments **206***a*, **206***b*. As oriented in FIG. **5**, the energy will be biased in an upward direction in the direction from the point **301** toward the midpoint **502**. Thus, when RF energy is transmitted during an RF neurotomy procedure, a lesion will be created that is correspondingly offset from the central longitudinal axis **223** in the direction from the point **301** toward the midpoint **502**.

FIG. **6** is a side view of the tip **201** and filaments **206***a*, **206***b* oriented such that deployed filament **206***b* is disposed entirely within the plane of the figure. The filaments **206***a*, **206***b* extend from the tip **201** at a common distance, or location, along the central longitudinal axis **223**. The filament **206***b* is deflected radially outwardly from the central longitudinal axis **223**. The filament **206***b* emerges from the tip **201** at an angle **601** of about 30 degrees as dictated by the positioning of the transition region **305** relative to where the filament **206***b* is confined and on the mechanical properties of the filament **206***b* (as previously discussed). Also, it is noted that the distal tips **501***a*, **501***b* are positioned distally beyond the point **301** by a distance **602** and are disposed at a distance **603** from the central longitudinal axis **223**. In the embodiment illustrated in FIG. **6**, the distance **602** may be about 3.5 mm and the distance **603** may be about 3 mm. Such an arrangement may distally offset a lesion created by the needle **103** as compared to a lesion created with a tip without filaments or a lesion created with the needle **103** with the filaments **206***a*, **206***b* in the retracted position.

Accordingly, the filament **206***a*, **206***b* arrangement illustrated in FIGS. **2**A, **3**A, **3**B, **5** and **6** may be operable to produce lesions that are radially offset from the central longitudinal axis **223** and distally offset from the point **301** as compared to a lesion created by the tip **201** without the filaments or a lesion created with the needle **103** with the filaments **206***a*, **206***b* in the retracted position.

Variations of filament positions and configurations from those illustrated in FIGS. **2**A, **3**A, **3**B, **5** and **6** will now be addressed. Variations in the relative shapes, positions and sizes of lesions created with the needle **103** may be achieved by repositioning the filaments. For example, as noted above, the lesion produced by the needle **103** will be in different positions depending on whether the filaments are in the deployed or refracted positions. Accordingly, intermediately shaped, positioned and/or sized lesions may be achieved by positioning the filaments in intermediate positions between the fully deployed or refracted positions. Thus, for any given

configuration of deployable filaments discussed herein, the positions and/or sizes of lesions created by those configurations may be varied by varying the positioning of the filaments to intermediate positions between the fully deployed and retracted positions. As noted above, the needle **103** with deployed filaments is operable to produce larger lesion volumes than the needle **103** with retracted filaments. For example, the needle **103** with fully deployed filaments may be operable to produce lesion volumes of about 500 mm^3.

Further variation in the shape, position and/or size of lesions created by needles with deployable filaments may be achieved by different configurations of filaments. Variations may include variations in materials, the number of filaments, the radial positioning of the filaments, the axial positioning of the filaments, the length of the filaments, the angle at which the filaments exit the tip, and the shape of the filaments. By varying these parameters the needle may be configured to produce lesions of various sizes and shapes that are positioned at various locations relative to the tip. Such variations may be specifically tailored to be used in specific procedures, such as RF neurotomy procedures of particular nerves adjacent to particular vertebrae.

Variations of the materials used for the tip and/or the filaments may be selected to achieve particular lesion sizes, positions and/or shapes. For example, the tip may be made form a material that does not conduct RF energy. In such an embodiment, RF energy from the RF probe **401** may be conducted by substantially only the deployed filaments. Such an arrangement may provide for a lesion with a larger offset from the central longitudinal axis **223** than would be produced where the tip conducts RF energy and acts as an electrode along with the filaments.

Another material-related variation that may affect lesion shape, size and/or position is the addition and placement of insulation over the tip and/or filaments. For example, by placing a layer of insulation over the proximal half of the portions of the filaments that extend from the tip when in the deployed position, the shape of the lesion may be altered since RF energy may primarily emanate from the distal, non-insulated portion of the filaments. Similarly, insulation may be added to the tip to alter the RF energy delivered from the tip.

Moreover, the materials used in making the filaments and tip may be selected based on RF conductivity. For example, by using a material for the tip that is less conductive of RF energy, the proportion of RF energy emanating from the tip as compared to that emanating from the filaments may be altered resulting in a corresponding change in lesion size, position and/or shape.

The RF needles and RF probes discussed herein may be constructed from materials that are Magnetic Resonance Imaging (MRI) compatible. As such, MRI equipment may be used to verify the positioning of such RF needles and/or monitor the progress of an ablation procedure (e.g., RF neurotomy) using such RF needles.

Variations of the number of filaments used for needle may be selected to achieve particular lesion sizes, positions and/or shapes. For example, as illustrated in FIG. **7**, a third filament **701** may extend from tip **201'** in a position between filaments **206***a*, **206***b*. The tips **501***a*, **501***b* of the filaments **206***a*, **206***b* and a tip **702** of filament **701** may form a polygon **703** that has a centroid **704**. The centroid **704** is offset from the central longitudinal axis **223**. Such an arrangement may produce a lesion that is offset from the central longitudinal axis **223** to a different degree than, and shaped differently than, a lesion created by the needle of FIG. **5**. In general, where a centroid of a polygon formed by the tips of filaments (or, in the case where there are two filaments, the midpoint between them) is offset from the central longitudinal axis **223**, a lesion created by such a configuration will be correspondingly offset from the central longitudinal axis **223**. The filaments **206***a*, **206***b*, **702** are positioned within the same filament angle **503** of about 120 degrees as in the embodiment of FIG. **5**. Furthermore, the embodiment of FIG. **7** has a filament-free angle **504** of about 240 degrees, also the same as in the embodiment of FIG. **5**. In general, where the filaments are positioned within an arc that is less than 180 degrees, resultant lesions will be offset from the central longitudinal axis **223** in the direction of the filaments. In general, in an embodiment consisting of three or more filaments where the filaments are positioned within an arc that is less than 180 degrees, the filament-free angle may be correspondingly greater than 180 degrees (e.g., greater than 200 degrees or greater than 240 degrees).

Variations in the radial positioning of filaments of a needle may be selected to achieve particular lesion sizes, positions and/or shapes. For example, as illustrated in FIG. **8**, four filaments **801***a*-**801***d* are positioned about a tip **201"**. The tips of the filaments **801***a*-**801***d* may form a polygon **802** that has a centroid **803**. Such an arrangement may produce a lesion whose center is offset from the central longitudinal axis **223** in the direction of the centroid **803**. The filaments **801***a*-**801***d* are positioned within a filament angle **804** of about 200 degrees. Furthermore, the embodiment of FIG. **8** has a filament-free angle **805** (i.e., the largest angle about the circumference of the tip **201"** that is free of filaments) of about 160 degrees. It will be appreciated that, as illustrated in FIG. **8**, a configuration capable of producing a lesion offset from the central longitudinal axis **223** may have a filament-free angle that is less than 180 degrees.

In the above-described embodiment of FIGS. **2**A, **3**A, **3**B, **5**, and **6** with two filaments, a midpoint **502** between the filaments was discussed. In embodiments with more than two filaments, a centroid of a polygon formed by the distal ends of the filaments was discussed. Both the midpoints and the centroids may be considered to be "average" points of the filaments for their particular configurations. In such embodiments, the midpoint between filaments in two-filament embodiments and the centroid of the polygon in embodiments with more than two filaments may be offset from the central longitudinal axis of the elongate member. For example, the midpoint or centroid may be offset from the central longitudinal axis by 1 mm or more. In embodiments, the polygon may lie in a plane perpendicular to the central longitudinal axis.

As illustrated in, for example, FIGS. **2**A, **3**A, **3**C, **5**, **7**, **8** and **9** the distal ends of the filaments when fully deployed may be disposed in a common plane. In an embodiment, the common plane may be disposed perpendicular to the central longitudinal axis. Such a common plane for the distal ends of deployed filaments may be disposed distally from the distal end of the tip.

As illustrated in, for example, FIGS. **2**A, **3**A, **3**C, **5** and **7** the filaments of the needle may be deployed on a common side of a central plane of the needle (where the central longitudinal axis is disposed entirely within the central plane). In such embodiments, the distal ends of the fully deployed filaments may all be disposed on a common side of the central plane. Such a configuration may enable the needle to be used to create a lesion that is offset from the tip of the needle to the same side of the central plane as the deployed filament ends.

As illustrated, inter alia, in FIG. **2**A, the filaments when fully deployed may point in an at least partially distal direction. In this regard, a vector extending axially from the distal end of a filament and coinciding with a central axis of the filament at the end of the filament has at least some distal component. Accordingly, the fully deployed filaments embodiments shown in FIGS. **2**A, **3**A and **10** all point in an at least partially distal direction.

In another variation of the radial positioning of filaments of a needle, the filaments may be uniformly distributed about the circumference of the tip. Such an embodiment is illustrated in FIG. **9**. The needle of FIG. **9** includes 3 equally distributed filaments **901***a*, **901***b*, **901***c*. Consequently, the angles **902***a*, **902***b*, **902***c* between the filaments **901***a*, **901***b*, **901***c* may each equal 120 degrees. Such a needle may be operable to produce a lesion that is generally centered along the central longitudinal axis **223**. However, the position of the produced lesion axially along the central longitudinal axis **223** may be determined by the configuration of the filaments. For example, relatively longer filaments may be operable to produce lesions that are positioned distal to lesions produced by configurations with relatively shorter filaments.

Variations in the axial positioning of where deployed filaments emerge from the tip of a needle may be selected to achieve particular lesion sizes, positions and/or shapes. For example, returning to FIG. **7**, if the third filament **701** of the embodiment of FIG. **7** were axially positioned such that it is distal to filaments **206***a*, **206***b*, the resultant lesion may be produced may be longer along the central longitudinal axis **223** than that of an embodiment where the filaments **206***a*, **206***b*, **701** are positioned at the same point along the central longitudinal axis **223**. In another variation, as deployed, two or more filaments may be disposed at the same radial position and at different axial positions. Such embodiments may include multiple rows of filaments.

The lengths of filaments beyond the tip (when the filaments are in the deployed position) in a needle may be varied to achieve particular lesion sizes, positions and/or shapes. For example, increasing the length of the deployed portions of the filaments **206***a* and **206***b* of the embodiment illustrated in FIGS. **5** and **6** may result in a needle capable of producing lesions that are more distally positioned than those created by the embodiment as shown in FIGS. **5** and **6**. The effects of lengthening or shortening the deployed length of the filaments are similar to those discussed above with respect to partially deploying filaments.

Embodiments of a needle may include deployed filaments of different lengths. Where all of the filaments of a particular needle are moved by a common actuator, such variations may be achieved by varying the overall length of the filaments. In such an embodiment, the end points of the shorter filaments may be retracted further into the tip or elongate member than longer filaments. The effects of lengthening or shortening the deployed length of the filaments are similar to those discussed above with respect to variations in the axial positioning of where deployed filaments emerge from the tip of the needle.

The angle (such as angle **601** of FIG. **6**) at which a filament exits a tip may be varied to achieve particular lesion sizes, positions and/or shapes. For example, an embodiment similar to the embodiment of FIGS. **5** and **6**, but where the deployed filaments are at a 60 degree angle instead of the 30 degree angle shown in FIG. **6**, may be operable to produce a lesion that has a larger maximum cross-sectional dimension in a plane perpendicular to the central longitudinal axis **223** than the embodiment of FIGS. **5** and **6**. This may be due to the filaments emanating RF energy at a distance further away from the central longitudinal axis than the embodiment of FIGS. **5** and **6**. A particular embodiment of the needle may include deployed filaments at different angles relative to the central longitudinal axis.

The shapes of the portions of the filaments that extend away from the tip may be varied to achieve particular lesion sizes, positions and/or shapes. For example, FIG. **10** illustrates the tip **201** and filaments **1001***a*, **1001***b*, where the portions of the filaments **1001***a*, **1001***b* that extend beyond the tip **201** are curved. Such curvatures may be achieved by, for example, filaments that comprise a shape memory alloy (e.g., Nitinol) or spring material. When the filaments **1001***a*, **1001***b* are retracted, the shape of the tip **201** and/or elongate member **203** may keep the filaments **1001***a*, **1001***b* in a constrained straightened position. As the filaments **1001***a*, **1001***b* are advanced toward the fully deployed position, they become unconstrained and return to their curved shape as shown in FIG. **10**. The deployed shape of the filaments **1001***a*, **1001***b* may be predetermined, or the filaments **1001***a*, **1001***b* may be made from a material that may be shaped by a user prior to insertion.

The curved filaments **1001***a*, **1001***b* of FIG. **10** are positioned within planes that include the central longitudinal axis **223**. In other embodiments, the filaments **1001***a*, **1001***b* may be curved in other directions, such as in a corkscrew arrangement. This may be beneficial to assist the filaments in remaining anchored to the tissue during delivery of RF energy. The curved filaments **1001***a*, **1001***b* of FIG. **10** may be operable to produce a flatter (in a plane perpendicular to the central longitudinal axis **223**) lesion than the straight filaments **206***a*, **206***b* of FIG. **6**.

FIG. **3**C is a detailed view of the distal end **310** of a needle **309** that is an alternate embodiment of the needle **103**. The distal end **310** includes a tip **311** that may include a sharpened point **312** for piercing the skin of a patient and facilitating advancement through tissue. The tip **311** may further include a tapered portion **313** that transitions the tip **311** from the point **312** to a first body portion **314**. The first body portion **314** may be connected to a second body portion **315** at an angle **316**. In an exemplary embodiment, the angle **316** may be about 15°. The second body portion **315** may be aligned with an elongate member **317**. The elongate member **317** may be similarly configured as the elongate member **203** of FIGS. **3**A and **3**B. The angle **316** between the first body portion **314** and the second body portion **315** may aid the physician in navigating the needle **309** to a desired position. For example, by rotating the needle **309** such that the first body portion **314** is pointing in a desired direction, subsequent advancement of the needle **309** may result in the needle **309** following a non-straight path biased toward the desired direction.

The first and second body portions **314**, **315** may be cylindrical as illustrated, or they may be of any other appropriate shape. The first and second body portions **314**, **315** may have cross-sections that coincide with the cross section of the elongate member **317**.

The tip **311**, or a non-insulated portion thereof, may act as an RF energy delivery element. As such, the tip **311** may be made from a conductive material such as, for example, stainless steel. The tip **311** may be coated. The tip **311** material and optional coating may be selected to improve radiopacity, improve and/or alter RF energy conduction, improve lubricity and/or reduce tissue adhesion.

The tip **311** may include filament slot **318***a* and filament slot **318***b*. The geometry of the filament slots **318***a*, **318***b* may be selected to allow filaments **319***a*, **319***b* to be

adequately retracted (e.g., such that they are disposed within a cross-sectional envelope of the second body portion **315**) while the needle **309** is inserted into the body, so that the filaments **319***a*, **319***b* do not cause any unintended damage to the patient. Such positioning of the filament slots **318***a*, **318***b* avoids having filament exit features on the tapered portion **313** and on the first body portion **314** and thus avoids potential coring that could be caused by such positioning.

The internal geometry of the filament slots **318***a*, **318***b* may be designed such that the filaments **319***a*, **319***b* may be retracted and advanced. For example, the internal geometry of the filament slots **318***a*, **318***b* may be configured such that advancement of the filaments **319***a*, **319***b* relative to the filament slots **318***a*, **318***b*, will cause the filaments **319***a*, **319***b* to be deflected outwardly as the filaments **319***a*, **319***b* move distally relative to the second body portion **315**. Depending on the configuration of the filament slots **318***a*, **318***b* and on the mechanical properties of the filaments **319***a*, **319***b*, various deployment angles of the filaments **319***a*, **319***b* relative to a central longitudinal axis of the second body portion **315** may be achieved.

The configuration and orientation of the filament slots **318***a*, **318***b* may be selected such that deployed filaments **319***a*, **319***b* may achieve the positioning illustrated in FIG. **3**C. In FIG. **3**C, the filaments **319***a*, **319***b* are generally positioned in a plane that is perpendicular to a plane that includes the angle **316** between the first and second body portions **314**, **315**. As illustrated, the filaments **319***a*, **319***b* may be positioned such that they extend at an angle relative to the plane that includes the angle **316**. Other filament slot **318***a*, **318***b* configurations may be configured to achieve other desired filament **319***a*, **319***b* placements. These configurations may be achieved by varying the quantity of filament slots and filaments, the placement of filament slots about the circumference of the tip **311**, the angle at which the filaments extend away from the first and second body portions **314**, **315**, and/or the placement of filament slots along the first and second body portions **314**, **315**.

Similar to the embodiment of FIGS. **3**A and **3**B, the needle **309** may comprise a tube that includes a lumen therethrough. The lumen may be employed to accept an RF probe for delivery of RF energy and/or for the transport of fluids. In this regard, the tip **311** may further include a fluid port **320** that may be in fluid communication via a channel through the tip **311** with the lumen. The fluid port **320** may be used to transfer fluid between the region of the tip **311** and a proximal end of the needle **309**.

In the deployed position as shown in FIG. **3**C, the distal ends of the filaments **319***a*, **319***b* are disposed away from the tip **311**. In a retracted position (not shown, but similar to as shown in FIG. **3**B), the distal ends of the filaments **319***a*, **319***b* are disposed entirely within an outer perimeter (e.g., circumference where the second body portion **315** of the tip **311** is round) of the tip **311**. In the deployed position, the filaments **319***a*, **319***b* act as broadcast antennae for an RF probe inserted into the needle **309**. In this regard, together, the RF probe inserted into the lumen, the tip **311**, and the filaments **319***a*, **319***b*, may form a monopolar electrode for application of RF energy to the target volume. The filaments **319***a*, **319***b* may allow the RF energy from the RF probe to be dispersed over a larger volume than would be possible with the tip **311** alone.

The filaments **319***a*, **319***b* may be constructed in a manner similar to as described with respect to the filaments **206***a*, **206***b*.

In general, any or all of the above variables may be incorporated into a particular embodiment of a needle to yield a needle capable of producing a lesion with a particular size, position and shape relative to the tip of the needle. Such custom sizes, positions and shapes may be designed for specific procedures. For example, a particular lesion size, position and shape may be selected to enable a physician to navigate the needle to a particular landmark (e.g., proximate or touching a bone visible using fluoroscopy) and then orient the needle such that deployed filaments will be operable to produce a lesion at a particular location relative to the landmark. By navigating to a particular internal landmark, as opposed to attempting to visualize a relative position of a needle offset from a landmark, a more accurate and/or consistent positioning of the needle may be achieved. In this regard, the skill level required to accurately position the needle for a particular procedure may be reduced.

The lesion shapes achievable through selection of the above variables may include, for example, generally spherical, oblong, conical, and pyramidal shapes. The orientation relative to, and the amount of offset from, the tip of such shapes may be selectable. In an embodiment, the tips of the deployed filaments may be positioned distally relative to the point of the tip to provide for a facile positioning of the lesion relative to the tip. Such capability may allow for the needle to be inserted directly toward a target volume. In other embodiments, the tips of the deployed filaments may be positioned at the same axial position along the central longitudinal axis as the point of the tip or the tips of the deployed filaments may be positioned proximally relative to the point of the tip. In other embodiments, some filament endpoints may be located distal to the point of the tip while others are disposed proximal to the point of the tip.

In the embodiment of FIGS. **2**A, **2**B, **3**A, **3**B, **5** and **6**, the filaments **206***a*, **206***b* have been illustrated as running the entire length of the elongate member **203** from the filament hub **221** to the tip **201**. In an embodiment, a single member may run along at least part of the elongate member **203** and the filaments may be interconnected to the single member at some point proximal to the tip **201**. Furthermore, the filaments **206***a*, **206***b* have been illustrated as being straight within the elongate member **203**. In alternate embodiments, the filaments within the elongate member **203** may be braided, wrapped or twisted together. Such embodiments may have increased column strength, providing resistance to buckling and/or bending within the elongate member **203**.

The filaments discussed herein may be encased within lumens sized to help prevent buckling or bending of the filaments within the elongate member **203**. Such lumens may be part of the elongate member or they may be separate members (e.g., tubes within the elongate member). Such lumens may be formed by an inner member (not shown) within the elongate member where the inner member includes channels along its periphery in which the filaments may lie with the elongate member forming a portion of the lumens. Lumens used for filaments may also serve as lumens for the transfer of liquid to and/or from the region surrounding the tip. In another variation, the filaments may be hollow and may be used for transfer of liquid to and/or from the region surrounding the tip.

The illustrated embodiments show all of the filaments of a given embodiment as commonly deployed or refracted. In a variation, one or more filaments may be separately deployed and/or refracted such that the physician could selectively engage a desired number of elements. In another variation, a plurality of filaments may exit from the tip at a common location and form a fan-like arrangement as they are deployed.

Deployment of filaments discussed above has been described as the filaments moving relative to a stationary tip. Alternatively, embodiments may be deployed by pulling the tip back relative to the filaments. Such embodiments may be beneficial where the needle is initially advanced such that it is in contact with bone to ensure proper positioning. Then the tip may be withdrawn, leaving the filaments (e.g., curved shape memory filaments) in a precise, known position.

Returning to FIGS. **2**A and **2**B, as noted, the hub **204** may be fixedly attached to the elongate member **203**. The hub **204** may be the primary portion of the needle **103** gripped by the physician during insertion and manipulation of the needle **103**. The hub **204** may have an asymmetric feature, such as indicator **225**, that is oriented in a known fashion relative to the asymmetry of the tip **201**. In this regard, the indicator **225** may be used to communicate to the physician the orientation of the tip **201** within the patient **101**. Internally, the hub **204** may include a cavity **213** sized to house a protrusion **218** of the actuator **216**. The hub **204** may include a hole through which a projection **215** may project into the interior of the cavity **213** to control the motion of the actuator **216** relative to the hub **204** and to secure the actuator **216** to the hub **204**. The hub **204** may be made from any appropriate material, e.g., a thermoset plastic.

The actuator **216** may be used to control the motion to deploy and/or retract the filaments **206***a*, **206***b*. The actuator **216** is operable to move along the central longitudinal axis **223** relative to the hub **204**, elongate member **203** and tip **201**. The actuator **216** includes the protrusion **218** extending into the cavity **213** of the hub **204**. The outer surface of the protrusion **218** includes a helical track **219** sized to accommodate the projection **215**. In this regard, as the actuator is rotated relative to the hub **204** (e.g., by a physician to deploy the filaments **206***a*, **206***b*), the helical track **219** and projection **215** combine to cause the actuator **216** to move axially along the central longitudinal axis **223**. The actuator **216** has an interface portion **217** that may be gripped by a user when twisting the actuator **216**. The interface portion **217** may be knurled or otherwise textured to enhance the physician's ability to twist the actuator **216**. The protrusion **218** may include an inner cavity **226** sized to accept the filament hub **221** and to allow the filament hub **221** to rotate freely relative to the actuator **216**. In this regard, the linear motion of the actuator **216** may be transmitted to the filament hub **221** while the rotational motion of the actuator **216** may not be transmitted to the filament hub **221**.

The actuator **216** may include a Luer fitting **220** or any other appropriate fitting type on a proximal end thereof. The Luer fitting **220** may be in fluid communication with the lumen **222** and provide a connection such that fluid may be delivered into the lumen **222** and to the fluid port **210** of the tip **201**. The Luer fitting **220** may also be configured to allow for the insertion of the RF probe **401** into the lumen **222**. The actuator **216** may be made from any appropriate material.

The filaments **206***a*, **206***b* may be fixedly interconnected to the filament hub **221**. In this regard, the axial movement of the filament hub **221** due to the actuator **216** may be communicated to the filaments **206***a*, **206***b* to deploy and retract the filaments **206***a*, **206***b* when the actuator **216** is rotated. The filament hub **221** may be made from any appropriate material.

Thusly, the physician may be able to deploy or retract the filaments **206***a*, **206***b* by twisting the actuator **216**. For example, as illustrated, a counterclockwise (as seen from the viewpoint of FIG. **5**) rotation of the actuator **216** relative to the hub **204** will result in the deployment (extension) of the filaments **206***a*, **206***b*. Relatedly, a clockwise rotation of the actuator **216** relative to the hub **204** will result in the retraction of the filaments **206***a*, **206***b*. Additionally, by partially rotating the actuator **216** relative to the hub **204**, the filaments **206***a*, **206***b* may be partially deployed or refracted. The actuator **216** and/or the hub **204** may include markings to indicate the position of the filaments **206***a*, **206***b* (e.g., the depth of deployment). The actuator **206** and/or hub **204** may include detents to provide a tactile feedback of the position of the filaments **206***a*, **206***b*.

Other types of mechanisms may be used to control the deployment and retraction of the filaments **206***a*, **206***b*. For example, a spring loaded mechanism may be used. Such a configuration may use a spring that acts upon the filaments **206***a*, **206***b* to bias the filaments **206***a*, **206***b* toward a predetermined position (e.g., either deployed or retracted). Such a mechanism may be analogous to a spring loaded mechanism used in retractable ballpoint pens. In another example, a roll clamp mechanism may be incorporated. A roller wheel could be incorporated into the hub **204** such that as the wheel is rotated with the user's thumb, the filaments **206***a*, **206***b* would advance or retract. In another example, the hub **204** and actuator **216** may interact via complimentary threaded features. As the actuator **216** is threaded into the hub **204**, the filaments **206***a*, **206***b* would advance. As the actuator **216** is threaded out of the hub **204**, the filaments **206***a*, **206***b* would retract. In another example, a Touhy-Borst type mechanism could be incorporated to control the deployment and retraction of the filaments **206***a*, **206***b*. Any other appropriate mechanism for controlling linear motion of the filaments **206***a*, **206***b* may be incorporated into the needle **103**.

FIG. **2**C is a cut away view of a portion of an alternate embodiment of a hub **231** and actuator **232** that may be part of RF needle **103** used in an RF neurotomy procedure. The hub **231** may be fixedly attached to the elongate member **203**. The hub **231** may be the primary portion of the needle **103** gripped by the physician during insertion and manipulation of the needle **103**. The hub **231** may have an asymmetric feature, such as indicator **233**, that is oriented in a known fashion relative to the asymmetry of the tip **201**. In this regard, the indicator **233** may be used to communicate to the physician the orientation of the tip **201** within the patient **101**. Internally, the hub **231** may include a cavity **234** sized to house a protrusion **235** of a slide member **236**. The protrusion **235** may include a keyway or key slot **237** that may run along a longitudinal direction of the protrusion **235**. The internal surface of the hub **231** through which the protrusion **235** moves may include a mating key (not shown) configured to fit and slide within the key slot **237**. Together, the key slot **237** and mating key of the hub **231** may limit the slide member **236** to a linear motion along the central longitudinal axis **223**.

Filaments **206***a*, **206***b* may be fixedly connected to the protrusion **235** of the slide member **236** for movement therewith. In this regard, distal movement (e.g., movement to the right as shown in FIG. **2**C) of the protrusion **235** relative to the hub **231** may cause extension of the filaments **206***a*, **206***b* relative to the hub **231**, elongate member **203** and tip **201** (not shown in FIG. **2**C). For example, distal movement of the protrusion **235** may be used to move the filaments **206***a*, **206***b* from a retracted position to a deployed position. Similarly, proximal movement (e.g., movement to the left as shown in FIG. **2**C) of the protrusion **235** relative to the hub **231** may result in retraction of the filaments **206***a*, **206***b* relative to the hub **231**, elongate member **203** and tip **201** (not shown in FIG. **2**C).

The hub **231** may be made from any appropriate material, e.g., a thermoset plastic. The hub **231** may be at least partially transparent such that the position of the protrusion **235** and/or other components within the hub **231** may be observable by a user. The hub **231** may further include demarcations (e.g., molded or printed marks) such that the amount of extension of the filaments **206***a*, **206***b* may be determined from the position of the protrusion **235** and/or other components relative to the demarcations.

An actuator **232** may be used to control the motion to deploy and/or retract the filaments **206***a*, **206***b* fixedly connected to the protrusion **235**. The actuator **232** may be generally tubular such that it may fit around a hub projection **238** projecting from the proximal end of the hub **231**. At least a portion of the cavity **234** may be disposed within the hub projection **238**. The actuator **232** may also include an annular feature **239** configured to fit within an annular slot **240** in the slide member **236**. The annular feature **239** may be sized relative to the annular slot **240** such that the actuator **232** may rotate relative to the slide member **236** about the central longitudinal axis **223** (or an axis parallel thereto) while the position of the actuator **232** relative to the slide member **236** along the central longitudinal axis **223** remains fixed. In this regard, the actuator **232** and the slide member **236** may be configured to move in tandem relation along the central longitudinal axis **223**. The annular feature **239** and annular slot **240** may be configured such that, during assembly, the actuator **232** may be pressed onto the slide member **236** and the annular feature **239** may snap into the annular slot **240**.

The inner surface of the actuator **232** may include a helical track **241** sized to accommodate a corresponding mating helical thread **242** on the hub projection **238**. In this regard, as the actuator **232** is rotated relative to the slide member **236** and hub **231** (e.g., by a physician to deploy the filaments **206***a*, **206***b*), the helical track **241** and helical thread **242** combine to cause the actuator **232** and the slide member **236** to move axially along the central longitudinal axis **223**. In this regard, a linear motion of the slide member **236** relative to the hub **231** may be created while the rotational motion of the actuator **232** may not be transmitted to the slide member **236** and the hub **231**. An outer surface of the actuator **232** may be textured or include features to assist the user in gripping and twisting the actuator **232**. In an alternative configuration, the helical track **241** may be disposed on the hub projection **238** and the helical thread **242** may be disposed on the inner surface of the actuator **232**.

The slide member **236** may include a Luer fitting **243** or any other appropriate fitting type on a proximal end thereof. The Luer fitting **243** may be in fluid communication with a lumen passing through the slide member **236** and may provide a connection such that fluid may be delivered through the Luer fitting **243** and into the lumen of the slide member **236**. In turn, the lumen of the slide member **236** may be in fluid communication with the cavity **234** of the hub **231**, which may in turn be in fluid communication with a lumen disposed within the elongate member **223**. The lumen disposed within the elongate member **223** may be in fluid communication with the tip **201**. In this regard, fluid may flow into the Luer fitting **243**, into and through the lumen within the slide member **236**, into and through the cavity **234** of the hub **231**, into and through the elongate member **223**, and out from the tip **201**. The Luer fitting **243**, the lumen within the slide member **236**, the cavity **234** of the hub **231**, and the lumen of the elongate member **223** may all also be configured to allow for the insertion of the RF probe **401** therethrough. Moreover, the protrusion **235** and cavity **234** of the hub projection **238** may be sized and/or configured to form a fluid seal therebetween. Accordingly, fluid delivered under pressure through the Luer fitting **220** may flow through the cavity **238** and into the elongate member **203** substantially without leaking past the interface between the protrusion **235** and the cavity **234** of the hub projection **238**.

As noted, the filaments **206***a*, **206***b* may be fixedly interconnected to the slide member **236**. In this regard, the axial movement of the slide member **236** due to the actuator **232** may be communicated to the filaments **206***a*, **206***b* to deploy and retract the filaments **206***a*, **206***b* when the actuator **232** is rotated. The slide member **236** may be made from any appropriate material. The actuator **232** may be made from any appropriate material.

Thusly, the physician may be able to deploy or retract the filaments **206***a*, **206***b* by twisting the actuator **232**. Additionally, by partially rotating the actuator **232** relative to the hub **231**, the filaments **206***a*, **206***b* may be partially deployed or refracted. The actuator **232** and/or hub **231** may include detents to provide a tactile feedback of the position of the filaments **206***a*, **206***b*. The detents may be configured such that tactile feedback associated with engagement of a detent coincides with a predetermined amount of deployment or retraction of the filaments **206***a*, **206***b*. In this regard, such tactile feedback may be used in determining filament position.

In alternate embodiments, the needle **103** may be a bipolar device instead of the monopolar device described above. In such embodiments, the filaments may be isolated from each other and the tip to enable bipolar operation. Where more than two filaments are included, elements may be included to allow for selection of the polarity of the filaments to aid in lesion shape, size and position control. In another variation, the needle **103** may be used in either a monopolar or a bipolar mode as selected by the physician.

The above-described embodiments of needles may used in spinal RF neurotomy procedures, which will now be described. In general, for an RF neurotomy procedure, the patient may lie face down on a table so that the spine of the patient is accessible to the physician. At any appropriate time before, during, and/or after the procedure, the physician may use imaging equipment, such a fluoroscope, to visualize the patient's anatomy and/or to visualize the positioning of equipment (e.g., the needle relative to a target volume).

The patient may be administered sedatives and/or intravenous fluids as appropriate. The skin of the patient surrounding where the procedure will take place may be prepared and maintained using an appropriate sterile technique. Where the needle is a monopolar device, a return electrode pad may be attached to the patient. A local anesthetic may be injected subcutaneously where the needle will be inserted. Anesthetic may also be administered along the approximate path the needle will take.

With the filaments in the retracted position, the needle may be introduced into the patient and moved to a target position relative to a target portion of a target nerve or to a target position relative to a target volume in which the target nerve is likely situated (all of which are generally referred to herein as the target nerve or portion of the target nerve). The target nerve may be an afferent nociceptive nerve such as, for example, a medial branch nerve proximate a lumbar facet joint. Introduction into the patient may include percutaneously using the tip of the needle to pierce the skin of the patient. The moving of the needle may include navigating toward the target position using fluoroscopic guidance.

Furthermore, the moving of the needle may include advancing the needle to an intermediate position and then repositioning the needle to the target position. For example, the needle may be advanced until it contacts a bone or other structure to achieve the intermediate position. This may be followed by retracting the needle a predetermined distance to achieve the target position. Such a procedure may be facilitated by the markers **224** or collar previously discussed.

During the moving of the needle or after the target position has been achieved, the needle may be used to inject an anesthetic and/or a dye. The dye may increase contrast in fluoroscopic images to assist in visualizing the patient's anatomy, which may aid the physician in guiding and/or verifying the position of the needle.

The needle may be rotated about the central longitudinal axis of the elongate member of the needle to achieve a desired orientation relative to the target nerve. For example, the needle may be rotated such that a lesion created with the needle with the filaments deployed will be offset from the central longitudinal axis toward the target nerve. Such rotation of the needle may be performed prior to insertion of the needle into the patient and/or after insertion into the patient. For example, the physician may rotate the needle prior to insertion such that the needle is generally in the desired rotational orientation. Then, after achieving the target position, the physician may fine tune the rotational orientation of the needle by rotating the needle to a more precise orientation.

Once the target position and desired rotational orientation have been achieved, the next step may be to advance one or more filaments of the needle relative to the tip of the needle. The particular needle used for a procedure may have been selected to enable the creation of a particular sized and shaped lesion at a particular position relative to the needle. As such, the particular needle used may be of any appropriate configuration (e.g., any appropriate number of filaments, any appropriate filament positioning) discussed above.

Where the needle is configured as shown in FIG. **5**, the advancement of filaments may include advancing the filaments such that when the filaments are in their respective deployed positions, a midpoint between a distal end of the first filament and a distal end of the second filament is offset from the central longitudinal axis of the needle and the filament endpoints are disposed distal to the tip of the needle. Such deployment may enable the needle to be used to create a lesion that is offset from the tip of the needle toward the midpoint between the deployed filament ends. The lesion created may also be positioned at least partially distal to the tip of the needle.

FIG. **11**A is an illustration of an exemplary set of isotherms **1010***a*-**1010***c* that may be created with the needle **103** of FIG. **2**A. As illustrated by the set of isotherms **1010***a*-**1010***c*, RF energy emanating from the tip **201** and filaments **206***a*, **206***b*, may produce a region of elevated temperatures disposed about the tip **201** and filaments **206***a*, **206***b*. The isotherms **1010***a*-**1010***c* may be offset from the central longitudinal axis **223** such that a centroid of the isotherms as viewed in FIG. **11**A is offset from the central longitudinal axis **223** in the direction of the filaments **206***a*. **206***b*. The centroid of the isotherms **1010***a*-**1010***c* as viewed in FIG. **11**A may also be disposed distally relative to the tip **201** such that it is disposed between the tip **201** and the distal ends of the deployed filaments **206***a*, **206***b*. The isotherms **1010***a*-**1010***c* may also be shaped such that, as viewed in FIG. **11**A, the isotherms **1010***a*-**1010***c* have a maximum cross dimension along the central longitudinal axis **223** that is greater than a maximum cross dimension in the plane of FIG. **11**A perpendicular to the central longitudinal axis **223**. Similarly, as shown in FIG. **11**B discussed below, the isotherms **1010***a*-**1010***c* may have a maximum cross dimension along the central longitudinal axis **223** that is greater than a maximum cross dimension perpendicular to the plane of FIG. **11**A and perpendicular to the central longitudinal axis **223**.

The offset of the centroid of the isotherms **1010***a*-**1010***c* from the central longitudinal axis **223** results in greater lesion width in a plane perpendicular to the central longitudinal axis **223**, as compared to a similarly sized straight needle with no filaments. The offset of the centroid of the isotherms **1010***a*-**1010***c* also allows for projection of the centroid of a corresponding lesion volume in a direction away from the central longitudinal axis **223**. By way of example, such offsets may advantageously enable the execution of the exemplary procedures described herein. In addition, such offsets may advantageously enable the creation of lesion volumes distal (relative to the needle **103**) to potentially interfering structures (e.g., an ossified process). Moreover, such offsets may advantageously enable the needle **103** to be inserted into a patient at a more desirable angle (e.g., closer to perpendicular to the surface of the patient such as within 30° of perpendicular to the surface of the patient) than would be required using a needle without offset lesion capabilities.

FIG. **11**B is an illustration of an exemplary lesion **1011** that may be created with the needle **103** of FIG. **2**A. In FIG. **11**B, the needle **103** has been placed perpendicular to a surface **1012**. The surface **1012** may, for example, be the surface of a bone, such as a lumbar vertebra. As illustrated, the filaments **206***a*, **206***b* are deployed such they are proximate to the surface **1012**. As such, the lesion **1011** has a width along the surface **1012** that is wider than would be created by the needle **103** if the filaments **206***a*, **206***b* were not deployed. Such capabilities may, for example, be advantageous where a target structure (e.g., a nerve) is known to be positioned along the surface **1012**, but its exact position is unknown. In such a case, the needle **103** may be positioned generally perpendicular to the surface **1012** to achieve the illustrated lesion width along the surface **1012**, whereas the needle **103** without the filaments **206***a*, **206***b* deployed, would require either multiple repositioning steps or for the needle **103** to be placed generally parallel to the surface **1012** to achieve the same lesion width along the surface **1012**.

FIG. **11**C is an illustration of an exemplary lesion **1022** that may be created with a single-filament needle **1020**. The single-filament needle **1020** is similar to the needle **103** with a difference that the single-filament needle **1020** includes only a single filament **1021**. The filament **1021** may be configured similarly to the filaments **206***a*, **206***b*. The single-filament needle **1020** with the filament **1021** deployed may be operable to produce a lesion **1022** that is a flattened version (e.g., thinner in a direction perpendicular to the central longitudinal axis **223**—the left to right direction as illustrated in FIG. **11**C) of a lesion that may be produced by the needle **103** with its filaments **206***a*, **206***b* deployed. The capability to produce such a lesion shape may be beneficial when it is desirable to have a relatively large lesion in a particular direction (e.g., to compensate for the variability of location of a target nerve) and a relatively small lesion width in another direction (e.g., to avoid a structure such as viscera or a patient's skin).

Where the needle is configured such that all of the filaments of the needle are deployed on a common side of a

central plane of the needle (where the central longitudinal axis is disposed entirely within the central plane), the advancement of filaments may include advancing the filaments such that when the filaments are in their respective deployed positions, the distal ends of all of the filaments are disposed on a common side of the central plane. Such deployment may enable the needle to be used to create a lesion that is offset from the tip of the needle to the same side of the central plane as the deployed filament ends. The lesion created may also be positioned at least partially distal to the tip of the needle.

Where the needle is configured as shown in FIG. **8**, the advancement of filaments may include advancing the filaments such that when the filaments are in their respective deployed positions, each filament distal end defines a vertex of a polygon whose centroid is offset from a central longitudinal axis of the needle. Such deployment may enable the needle to be used to create a lesion that is offset from the tip of the needle toward the centroid. The lesion created may also be positioned at least partially distal to the tip of the needle.

The advancement of the filaments may be achieved using any of the mechanisms discussed above. For example, in the embodiment of FIG. **2**A, rotating the actuator **216** relative to the hub **104** may cause the filaments to advance to the deployed position. The advancement of the filaments may be performed such that each of the plurality of filaments passes through a surface of the needle that is parallel to the central longitudinal axis of the needle. In an embodiment, the filaments of the needle may be advanced to a position that is an intermediate position between the retracted position and the fully deployed position. The degree of deployment may be based on the desired lesion size and/or the accuracy of the placement of needle. For example, the same needle may be used in two different procedures where the variability of the location of a target nerve is greater in the first procedure than it is in the second procedure. In such situation, the greater deployment of the filaments may be used in the first procedure, whereas in the second procedure, a smaller degree of deployment may be used since a smaller lesion may suffice to ensure that the target nerve has been lesioned. In another example, after placement of the needle during a procedure, the position of the needle may be determined to be slightly offset from a target position. In such a case, the filaments may be deployed to a greater degree than would have been required if the needle were placed exactly on target. In such a case, the greater degree of deployment may be used to compensate for the needle positioning inaccuracy. In such a case, needle repositioning and possible associated trauma may be avoided.

After advancing the filaments to the deployed position, their positions may be confirmed using the imaging system (e.g., using a fluoroscope). Furthermore, proper positioning may be verified by using the needle to stimulate the target nerve. An electrical signal (e.g., up to about 2 volts applied at about 2 Hz) may be applied to the needle and the physician may observe any related patient movement (e.g., muscle fasciculation in the territory supplied by the nerve). In another example, an electrical signal (e.g., up to about 1 volt applied at about 50 Hz) may be applied to the needle and the patient may indicate if they feel any associated sensations and their locations to assist in verifying correct needle positioning. Such stimulation (either physician-observed or patient reported) may be used to stimulate a targeted nerve to determine if the deployed position is adequate to achieve denervation of the targeted nerve. In this regard, it is desirable for the stimulation to affect the targeted nerve.

Such stimulation may be used to attempt to stimulate a nerve that is not targeted for denervation (e.g., a nerve where no denervation is desired) to determine the position of the needle relative to such a non-targeted nerve. In this regard, if the stimulation signal does not stimulate the non-targeted nerve, it may be assumed that the position of the needle relative to the non-targeted nerve is such that the application of RF energy to the needle will not result in significant damage to the non-targeted nerve. And if the stimulation does stimulate the non-targeted nerve, the needle may be repositioned to avoid damaging the non-targeted nerve. In this regard, it is desirable for the stimulation not to affect the non-targeted nerve.

After correct needle positioning has been verified (e.g., by imaging and/or patient response), an anesthetic may be injected through the needle.

After the filaments have been advanced to the desired position, the next step may be to apply RF energy to the needle using the interconnected RF generator. In embodiments that use a separate RF probe to deliver RF energy, the RF probe may be inserted into a lumen of the needle prior to application of the RF energy. Additionally, when using such a configuration, the application of RF energy may include applying RF energy to the RF probe and conducting the RF energy away from the probe by the tip and/or filaments.

The resultant RF energy emanating from the tip and filaments may generate heat that ablates the target nerve. Such ablation may be achieved by creating a lesion that includes the target nerve. It is desired that the target nerve be completely ablated to prevent incomplete neurotomy which may result in dysesthesia and patient discomfort. In an exemplary embodiment, a lesion with a maximum cross dimension of 8-10 mm may be created. Larger or smaller lesions may be created by varying filament characteristics (e.g., filament advancement distance) and/or RF energy levels. The created lesion may be offset from the central longitudinal axis of the needle. The center of the lesion may be positioned distal to the tip of the needle. Of note, since the RF energy is emanating from the tip and filaments, a particularly sized lesion may be created with a lower peak temperature (the maximum temperature experienced in the patient) than would be possible if a needle without filaments were to be used to create the same-sized lesion. For example, a particular lesion may be achieved with the needle with deployed filaments where the peak temperature is about 55-60° C., whereas creation of the same lesion using a needle without filaments could require a peak temperature of about 80° C. Such lower temperatures required by the needle with deployed filaments may result in greater patient safety.

Before, during, and after the application of RF energy, a temperature sensor (e.g., thermocouple) at or near the tip of the needle may be used to monitor the temperature at or near the tip. Such readings may be used as control signals (e.g., a feedback loop) to control the application of RF energy to the needle. If it is desired to ablate additional target nerves or to ablate an additional volume to ensure ablation of the original target nerve, the spinal RF neurotomy procedure may continue.

Where the particular needle is configured to create lesions offset from the central longitudinal axis of the needle, and the additional target nerve or target volume is within a volume that may be lesioned using the needle in its current position but in a different rotational orientation, the procedure may continue as follows. First, after the initial RF energy application, the filaments may be retracted into the needle. Once retracted, the needle may be rotated, and the

filaments redeployed. Next, the reoriented needle may be used to at least partially ablate the additional target nerve or target volume. Such retargeting of ablation volumes without repositioning (e.g., without withdrawing the needle from the patient and reinserting), may result in reduced patient trauma as compared to known spinal RF neurotomy procedures which may require removal and reinsertion of a needle to achieve lesioning of the second target volume. Moreover, such retargeting of ablation volumes without repositioning may result in the ability to create uniquely shaped lesions from a single insertion position. Such shaped lesions may include, for example, lesions that are in the shape of two or more intersecting spheres. The steps of retracting the filaments, rotating the needle, redeploying the filaments, and applying RF energy may be repeated a plurality of times.

Where the additional target nerve or target volume is not within a volume that may be lesioned using the needle in its current position, the needle may be repositioned. Such repositioning may include partially or fully removing the needle from the patient and then repositioning the needle and repeating the above-described steps.

At any point where no additional lesioning is desired, the filaments of the needle may be retracted, and the needle may be removed from the patient. After removal of the needle, a sterile bandage may be placed over the needle insertion site or sites. The patient may then be held for observation and recovery from the effects of any sedative that may have been administered.

Examples of specific spinal RF neurotomy procedures will now be described. Generally, steps unique to each procedure will be discussed while steps common to any spinal RF neurotomy procedure (e.g., site preparation, needle removal) will not be further discussed. Each of the procedures is described as being performed with the needle **103** of FIGS. **2A-6**. It will be appreciated that the variations in needle configuration discussed above may be used in these procedures. For example, to increase the offset of the created lesion relative to the central longitudinal axis, curved (e.g., FIG. **10**) and/or partially insulated filaments may be used that may create a lesion with a greater offset from the central longitudinal axis than the embodiment of FIG. **2A-6**.

1. Lumbar RF Neurotomy of a Medial Branch Nerve Proximate a Lumbar Facet Joint.

This process may include using a needle that enables the creation of lesions which are offset from the central longitudinal axis of the needle. The procedure will be described as being performed on the L5 vertebra **1101** using FIG. **12** and the needle **103** of FIG. **2A**. It should be understood that other embodiments of needles described herein may be used in the procedure.

The lumbar RF neurotomy process may include positioning the tip **201** of the needle **103** (e.g., using fluoroscopic navigation) such that it is in contact with, or proximate to the groove **1102** between the transverse **1103** and superior articular **1104** processes of the targeted lumbar vertebra **1101**. Such positioning is shown in FIG. **12**. By contacting the lumbar vertebra **1101**, a positive determination of the position of the needle **103** may be made. By way of example, such positioning may be performed such that the needle **103** is within 30° of being perpendicular to the lumber vertebra **1101** at the point of contact with the lumbar vertebra **1101**, or at the point of the lumbar vertebra **1101** closest to the tip **201** of the needle **103**. Optionally, from such a position, the needle **103** may be retracted a predetermined amount (e.g., between about 3 mm and 5 mm) as measured by markers **224** on the needle **103**, as determined using the collar about the elongated member **203** discussed above, and/or by fluoroscopic navigation.

The process may include rotating the needle **103** such that the midpoint **502** is oriented toward the superior articular process **1104** and a medial branch nerve **1105** that is positioned along a lateral face **1106** of the superior articular process **1104**. Next, the filaments **206*a***, **206*b*** may be advanced to the deployed position (as shown in FIG. **12**). The position of the needle **103** and deployed filaments **206*a***, **206*b*** may be verified using fluoroscopy and/or patient stimulation. The RF probe **401** may then be inserted into the lumen **222** such that RF energy emanating from the probe **103** will be conducted by the tip **201** and filaments **206*a***, **206*b*** to the target medial branch nerve **1105** and away from the intermediate branch of the posterior primary ramus.

Next, RF energy may be applied to the RF probe **401**. The RF energy emanating from the needle **103** may be preferentially biased toward the target medial branch nerve **1105**. The lesion created by such a procedure may, for example, have a maximum cross dimension of 8-10 mm, and may ablate a corresponding portion of the medial branch nerve **1105**, thus denervating the facet joint.

In a variation, the needle may be operable to create a generally symmetric lesion relative to its central longitudinal axis. In such a variation the sequence of steps may include insert needle, deploy filaments, and apply RF energy.

In another variation, the needle may be inserted so it is positioned along the length of a portion of the nerve (as illustrated by needle **103'**). Such positioning is similar to known methods of RF neurotomy performed with needles without filaments. After positioning the needle, the filaments may be deployed and a lesion may be created. As noted above, a needle with deployable filaments that is capable of producing a lesion equivalent to that of a needle without deployable filaments may be smaller in diameter than the needle without deployable filaments. Accordingly, although the positioning of needle **103'** may be similar to known processes, the process utilizing the needle with deployable filaments may cause less trauma and be safer than procedures using a needle without deployable filaments due to the smaller size of the needle with deployable filaments. Moreover, as discussed above, the peak temperatures required to produce the desired lesion volume may be less when using the needle with deployable filaments as compared to the needle without deployable filaments, further contributing to patient safety. Furthermore, the filaments of needle **103'** may be partially or fully deployed to achieve a desired lesion location, shape and/or size.

It is noted that the illustrated deployment of needle **103** with the filaments **206*a***, **206*b*** deployed may be used to create a lesion that approximates a lesion that would be created with the a prior art (non filament) needle placed in the position of needle **103'** (e.g., parallel to the target nerve **1105**). Moreover, the placement of needle **103** generally perpendicular to the surface of the L5 vertebra **1101** may be less difficult to achieve than the parallel placement of the needle **103'**.

2. Sacroiliac Joint (SIJ) RF Neurotomy of the Posterior Rami.

This process may include using a needle that enables the creation of lesions which are offset from the central longitudinal axis of the needle. The procedure will be described as being performed on the posterior rami **1201** of the SIJ referencing FIG. **13** and using the needle **103** of FIGS. **2A-6**. It should be understood that other embodiments of needles described herein may be used in the procedure.

As part of the SIJ RF neurotomy process, it may be desirable to create a series of lesions in a series of lesion target volumes **1203***a*-**1203***h* lateral to the sacral foramina **1211**, **1212**, **1213** of a side of the sacrum **1200** to ablate posterior rami **1201** that are responsible for relaying nociceptive signals from the SIJ. Since the exact positions of the rami **1201** may not be known, lesioning such a series of target volumes **1203***a*-**1203***h* may accommodate the variations in rami **1201** positions. The series of target volumes **1203** may be in the form of one or more interconnected individual target volumes, such as target volumes **1203***a* and **1203***b*. In addition, the process may include an additional lesion **1208** between the L5 vertebra **1209** and the sacrum **1200**.

The SIJ RF neurotomy process may include positioning the tip **201** of the needle **103** (e.g., using fluoroscopic navigation) such that it is in contact with, or proximate to, and in lateral relation to the S1 posterior sacral foraminal aperture (PSFA) **1211** at a first point **1204** that is at the intersection of the two target volumes **1203***a* and **1203***b*. Such positioning may be performed such that the needle **103** is oriented within 30° of being perpendicular to the sacrum **1200** at the point of contact (or at the point of the sacrum **1200** closest to the tip **201** of the needle **103**). By contacting the sacrum **1200**, a positive determination of the position of the needle **103** may be made. Optionally, from such a position, the needle **103** may be retracted a predetermined amount (e.g., between 3 mm and 5 mm) as measured by markers **224** on the needle **103**, as determined using the collar about the elongated member **203** discussed above, and/or by fluoroscopic navigation. For example, a contralateral posterior oblique view may be obtained to ascertain that the tip **201** has not entered the spinal canal. For example, a fluoroscopic view may be obtained looking down the length of the needle **103** to verify that the needle **103** is properly offset from the S1 PSFA **1211** and/or a fluoroscopic view may be obtained looking perpendicular to the central longitudinal axis **223** of the needle **103** to verify that the needle is not below the surface of the scrum (e.g., disposed within the S1 PSFA **1211**). Additionally, an electrical signal may be applied to the needle **103** to stimulate nerves proximate to the tip **201** to verify correct needle **103** placement.

The process may include rotating the needle **103** such that the midpoint **502** is oriented toward the first target volume **1203***a* in the direction of arrow **1205***a*. Next, the filaments **206***a*, **206***b* may be advanced to the deployed position. The position of the needle **103** and deployed filaments **206***a*, **206***b* may be verified using fluoroscopy and/or stimulation. The RF probe **401** may then be inserted into the lumen **222** such that RF energy emanating from the needle **103** will be conducted by the tip **201** and filaments **206***a*, **206***b* to the first target volume **1203***a*. Next, RF energy may be applied to the RF probe **401**. The RF energy emanating from the needle **103** may be preferentially biased toward the first target volume **1203***a*. The lesion created by such an application of RF energy may, for example, have a maximum cross dimension of 8-10 mm, and may ablate a corresponding portion of the rami **1201**.

Next, the filaments **206***a*, **206***b* may be retracted and the needle **103** may be rotated approximately 180 degrees such that the midpoint **502** is oriented toward the second target volume **1203***b* in the direction of arrow **1205***b*. Optionally, some lateral repositioning of the needle may performed (e.g. without any needle pull back or with a small amount of needle pull back and reinsertion). Next, the filaments **206***a*, **206***b* may be advanced to the deployed position. The position of the needle **103** and deployed filaments **206***a*, **206***b* may be verified using fluoroscopy and/or stimulation. Next, RF energy may be applied to the RF probe **401** to create a lesion corresponding to the second target volume **1203***b*.

In this regard, with a single insertion of the needle **103**, two interconnected lesions (which may also be considered to be a single oblong lesion) may be created. Thus, as compared to known methods where an RF probe must be repositioned prior to each application of RF energy, the number of probe repositioning steps may be greatly reduced, thus reducing patient trauma and procedure duration. In this regard, a continuous region of lesioning may be achieved disposed about the S1 PSFA **1211** such that the lesion occupies a volume surrounding the S1 PSFA **1211** from about the 2:30 clock position to about the 5:30 clock position (as viewed in FIG. **13**). Such lesioning may help to achieve denervation of the posterior rami proximate to the S1 PSFA **1211**.

The above procedure may be repeated as appropriate to create lesions corresponding to the entire series of target volumes **1203***a*-**1203***h*, thus denervating the SIJ. In this regard, a similar continuous region of lesioning may be achieved disposed about the S2 PSFA **1212** and a region of lesioning from about the 12:00 clock position to about the 3:00 clock position (as viewed in FIG. **13**) relative to the S3 PSFA may be achieved disposed about the S3 PSFA **1213**. Furthermore, a lesion **1208** may be created at the base of the superior articular process of the L5 **1209** dorsal ramus in the grove between the superior articular process and the body of the sacrum. The needle **103** may be inserted generally perpendicular to the plane of FIG. **13** to produce lesion **1208**.

In a variation of the above procedure, three or more lesions may be created with a needle in a single position. For example, a needle positioned at a point **1106** proximate to three target volumes **1203***c*, **1203***d*, and **1203***e*, may be operable to create lesions at each of the three target volumes **1203***c*, **1203***d*, and **1203***e*, thus further reducing the number of needle repositionings.

In another variation, each individual lesion corresponding to the series of target volumes **1203** may be created using a needle with deployable filaments where the needle is repositioned prior to each application of RF energy. In such a variation the sequence of steps may be insert needle, deploy filaments, apply RF energy, retract filaments, reposition needle, and repeat as appropriate to create each desired lesion. Such a procedure may be conducted using a needle capable of producing a lesion symmetric to a central longitudinal axis of the needle (e.g., the needle of FIG. **9**).

3. Thoracic RF Neurotomy of a Medial Branch Nerve.

This process may include using a needle that enables the creation of lesions which are offset from the central longitudinal axis of the needle. Successful treatment of thoracic z-joint pain using radiofrequency ablation of relevant medial branch nerves is challenging owing to the inconsistent medial branch location in the intertransverse space, especially levels T5-T8. A conventional RF cannula must be positioned at multiple locations within the intertransverse space to achieve the sufficient tissue ablation for successful medial branch neurotomy. The procedure will be described as being performed on an intertransverse space between adjacent ones **1301**, **1302** of the T5 to T8 thoracic vertebrae using FIG. **14** and the needle **103** of FIGS. **2A-6**. It should be understood that other embodiments of needles described herein may be used in the procedure.

The process may include obtaining an optimized segmental anteroposterior image at target level defined by meticulous counting from T1 and T12. This may be followed by

obtaining an image that is ipsalateral oblique 8-15 degrees off sagittal plane of the spine to visualize costotransverse joint lucency clearly. This allows improved visualization of superior-lateral transverse process (especially in osteopenic patients). This angle aids in directing the probe to a thoracic anatomic safe zone medial to the lung, minimizing risk of pneumothorax.

The skin entry site for the needle **103** may be over the most inferior aspect of transverse process slightly medial to costotransverse joint. Inserting the needle **103** may include navigating the device over transverse process over bone to touch superior transverse process slightly medial to costotransverse joint. The process may include checking anteroposterior imaging to demonstrate active tip **201** of the needle **103** is at the superolateral corner of the transverse process. The process may also include checking a contralateral oblique (e.g., +/−15 degrees) image view to demonstrate the target transverse process in an elongate fashion. This view is useful for demonstrating the tip **201** of the needle **103** in relationship to the superolateral margin of the transverse process subadjacent to the targeted medial branch nerve. The process may include retracting the active tip **201** slightly (e.g., 1 mm to 3 mm).

The process may include rotating the needle **103** such that the midpoint **502** is oriented toward the intertransverse space between the vertebrae **1301**, **1302** and the medial branch nerve **1303** that is positioned therein. Next, the filaments **206***a*, **206***b* may be advanced ventral into the intertransverse space between the vertebrae **1301**, **1302** to the deployed position. The position of the needle **103** and deployed filaments **206***a*, **206***b* may be verified using fluoroscopy (e.g., using lateral imaging). The RF probe **401** may then be inserted into the lumen **222** such that RF energy emanating from the probe **103** will be conducted by the tip **201** and filaments **206***a*, **206***b* to the target medial branch nerve **1303**. Stimulation (e.g., motor and/or sensory) may be performed to verify positioning. Next, RF energy may be applied to the RF probe **401**. The RF energy emanating from the needle **103** may be preferentially biased toward the volume between the vertebrae **1301**, **1302**. The lesion created by such a procedure may, for example, have a maximum cross dimension of 8-10 mm, and may ablate a corresponding portion of the medial branch nerve **1303**.

It is noted that thoracic RF neurotomy performed on other thoracic vertebrae may require different sized lesions. For example, thoracic RF neurotomy performed on the T3-T4 vertebrae may require a smaller lesion volume than the above-described procedure, and thoracic RF neurotomy performed on the T1-T2 vertebrae may require a still smaller lesion volume. As described herein, the deployment of the filaments of the needle **103** may be varied to achieve such desired target lesion volumes.

4. Cervical Medial Branch RF Neurotomy.

Embodiments of needles described herein (e.g., the needle **103** of FIG. **2**A) are capable of creating a volume of tissue ablation necessary for complete denervation of the cervical zygapophyseal joints, including the C2/3 cervical zygapophyseal joint (z-joint). Tissue ablation for cervical z-joint using embodiments of needles described herein may be accomplished using a single placement and single heating cycle. Such single placement and single heating cycle may avoid unnecessary tissue damage from multiple placements of a conventional probe, and unintended injury to collateral tissue caused by excessive lesioning. The zone of ablation created by various embodiments of the device is designed to provide sufficient, and necessary tissue coagulation for a successful procedure, and thus may be expected to improve the outcomes of patients undergoing this spinal radiofrequency neurotomy.

A cervical medial branch RF neurotomy procedure will be described as being performed on the third occipital nerve at the C2/3 z-joint using the needle **103** as shown in FIG. **15**. In FIG. **15**, the needle **103** is positioned between the C2 **1401** and C3 **1402** vertebrae.

In a first step, the patient may be placed in a prone position on a radiolucent table suited to performing fluoroscopically guided spinal procedures. Sedation may be administered. The patient's head may be rotated away from the targeted side. Sterile skin prep and draping may be performed using standard well-described surgical techniques.

For Third Occipital Nerve (TON) ablation (C2/3 joint innervation) the lateral aspect of the C2/3 Z-joint is located under either parasagittal or alternatively, ipsilateral oblique rotation of less than/equal to 30 degrees of obliquity relative to the true sagittal plane of the cervical spine. The skin entry point may be infiltrated with local anesthetic. Then the tip **201** of the needle **103** is moved over the most lateral aspect of bone of the articular pillar at the juncture of the C2/3 z-joint to a first position contacting bone proximate to the most posterior and lateral aspect of the z-joint complex

Once boney contact is made, the needle **103** may be retracted a predetermined distance (e.g., 1-3 mm) and the filaments are deployed towards the lateral aspect of the C2/3 z-joint. The needle **103** may be rotated about a central longitudinal axis prior to filament deployment to ensure that deployment will occur in the desired direction.

Multiplanar fluoroscopic imaging may then be employed to verify that the tip and filaments are positioned as desired. For example, it may be verified that the filaments are positioned straddling the lateral joint lucency, and posterior to the C2/3 neural foramen. Useful imaging angles include anterior-posterior (AP), lateral, and contralateral oblique (Sluijter) views. To further verify adequate positioning of the needle **103**, motor stimulation may be performed by delivering a voltage (of up to 2 volts) at 2 Hz to the tip **201** and filaments. Furthermore, sensory stimulation may be performed at appropriate voltage (e.g., 0.4 to 1 volt) and frequency (e.g., 50 Hz).

After position verification, RF energy may be applied to the tip and the plurality of filaments to generate heat that ablates a portion of the third occipital nerve. After lesioning, the device may be removed. For levels below the C2/3 z-joint, the procedure may be similar than as described above with respect to the third occipital nerve, with the exception that the initial boney contact target is at the waist of inflection point of the articular pillar.

Similar to the above procedures, other spinal RF procedures may benefit from the asymmetrical application of RF energy from embodiments of probes described herein. Such asymmetry may, for example, be used to project RF energy in a desired direction and/or limit the projection of RF energy in undesired directions. The configuration of the filaments may be selected for a particular application to produce a desired size, shape and location (relative to the needle tip) of a lesion within the patient. The location of the lesion may be offset distally and/or laterally from the tip of the needle as required for a particular application.

It will be appreciated that the delivery of RF energy to tissue in the anatomy is practiced for a multitude of reasons and embodiments of needles described herein may be adapted (modified or scaled) for use in other medical procedures. For example, embodiments of needles described

herein could be used to deliver RF energy as a means to cauterize "feeder vessels," such as in bleeding ulcers and/or in orthopedic applications. Further, embodiments of needles described herein could also be adapted to procedures such as cardiac ablation, in which cardiac tissue is destroyed in an effort to restore a normal electrical rhythm in the hart. This application could further benefit from the ability of embodiments of needles described herein to deliver fluid through a lumen since, for example, emerging procedures in cardiac therapy require the ability to deliver stem cells, vascular endothelial growth factor (VEGF), or other growth factors to cardiac tissue. The ability to steer embodiments of the needle (previously discussed) may provide significant benefit to the in the field of cardiovascular drug delivery.

While various embodiments of the present invention have been described in detail, it is apparent that further modifications and adaptations of the invention will occur to those skilled in the art. However, it is to be expressly understood that such modifications and adaptations are within the spirit and scope of the present invention.

What is claimed is:

1. A system comprising:

an RF probe; and

a needle for insertion into a patient during an RF ablation procedure, the needle comprising:

a hub;

an elongate member fixed to the hub, the elongate member comprising a lumen at an interior thereof;

a tip fixed to the elongate member at a distal end of the needle, wherein the tip is shaped to pierce tissue of the patient;

a plurality of filaments;

an actuator interconnected to the plurality of filaments, wherein movement of the actuator in a first direction relative to the hub moves the plurality of filaments relative to the tip to a deployed position distally beyond the tip, and wherein movement of the actuator in a second direction relative to the hub retracts the plurality of filaments to a retracted position in which the plurality of filaments are disposed within at least a portion of the elongate member; and

a fitting in fluid communication with the lumen, the fitting being configured to provide a connection for injection of fluid through the fitting and through the lumen, the fitting further being configured to allow for insertion of the RF probe into the lumen through the fitting,

wherein the lumen at the interior of the elongate member is configured to accept the RF probe therein to physically contact a conductive portion of the needle and thereby electrically connect the RF probe to the tip and the plurality of filaments, such that energy emitted by the RF probe passes through the tip and the plurality of filaments, and such that the RF probe, the tip, and the plurality of filaments operate together as a single monopolar RF electrode,

wherein the conductive portion of the needle is at a distal end of the needle, and

wherein, when the RF probe is fully separated from the needle in a non-inserted state, such that none of the RF probe is within the needle, the plurality of filaments are movable via the actuator from the retracted position, in which the plurality of filaments are disposed within said at least a portion of the elongate member, to the deployed position.

2. The system of claim **1**, wherein the actuator fits around at least a portion of the hub, and wherein the actuator is configured to rotate relative to the hub about a central longitudinal axis of the needle.

3. The system of claim **2**, wherein the actuator is generally tubular.

4. The system of claim **1**, wherein the needle further comprises a slide member coupled to the actuator and fixedly connected to the plurality of filaments, wherein the hub includes a cavity sized to house a protrusion of the slide member, and wherein the slide member is limited to a linear motion relative to the hub as the actuator is rotated.

5. The system of claim **4**, wherein the slide member is configured to axially advance and retract without rotating relative to the hub.

6. The system of claim **1**, wherein the tip comprises a fluid port in fluid communication with the lumen such that an anesthetic and/or an image enhancing dye may be introduced into a region around the tip through the fluid port.

7. The system of claim **1**, wherein each filament of the plurality of filaments has a pre-set bias such that the filament is curved when in the deployed state.

8. The system of claim **1**, wherein when each filament of the plurality of filaments is in the deployed position, the filaments extend outwardly from the tip.

9. The system of claim **8**, wherein each filament comprises a distal end, wherein the distal end of each filament defines a point when each filament is in the deployed position, and wherein an average of all the points is offset from a central longitudinal axis of the elongate member.

10. The system of claim **1**, wherein the plurality of filaments comprises three filaments, and wherein an angle between each pair of adjacent filaments is 120 degrees when each filament is in the deployed position.

11. The system of claim **1**, wherein the plurality of filaments are configured to form a lesion having a pyramidal shape.

12. The system of claim **1**, wherein the tip tapers to a point, and wherein the elongate member and the tip comprise a single unitary structure.

13. The system of claim **1**, wherein a proximal end of the elongate member is fixed to the hub.

14. The system of claim **1**, wherein the tip is asymmetrical, and wherein the hub comprises an indicator that is oriented to communicate an orientation of the asymmetrical tip.

15. The system of claim **1**, wherein the hub and/or the actuator includes markings to indicate a depth of deployment of the plurality of filaments.

16. The system of claim **1**, wherein the hub and/or the actuator includes detents to provide a tactile feedback of a position of the plurality of filaments.

17. The system of claim **1**, wherein the RF probe comprises a cable for use in connecting the RF probe to a radiofrequency generator.

18. The system of claim **1**, wherein the fitting is configured to be coupled to a fluid source and the lumen is configured to conduct fluid from the fluid source when the RF probe is not positioned within the needle.

19. The system of claim **1**, wherein the fitting is configured to provide a connection to a fluid source for said injection of fluid through the fitting and through the lumen.

20. The system of claim **19**, wherein the fitting comprises a Luer fitting configured to be connected with the fluid source when the RF probe is fully separated from the needle, such that none of the RF probe is within the needle, the Luer fitting further being configured to separately permit the RF probe to be inserted into the lumen through the Luer fitting when the Luer fitting is not connected with the fluid source.

21. The system of claim 19, wherein the fitting is configured to be connected with the fluid source and to permit fluid to pass through the fitting and through the lumen when the RF probe is not present within the lumen.

22. The system of claim 21, and wherein the fitting is further configured to permit the RF probe to be inserted into the lumen through the fitting when the fitting is not connected with the fluid source.

23. The system of claim 19, wherein the fitting is configured to accept a connector of the fluid source.

24. The system of claim 23, wherein the fitting comprises a Luer fitting and the connector of the fluid source comprises a Luer fitting.

25. The system of claim 19, wherein the lumen is configured to deliver fluid through the tip at the distal end of the needle.

26. The system of claim 25, wherein each filament of the plurality of filaments is devoid of any lumen therethrough for the transportation of fluid, and wherein fluid injected through the needle passes through the lumen at the interior of the elongate member and through the tip of the needle without passing through an interior of any of the plurality of filaments.

27. The system of claim 1, wherein the lumen is configured to deliver fluid through the tip at the distal end of the needle.

28. The system of claim 1, wherein each filament of the plurality of filaments is devoid of any lumen therethrough for the transportation of fluid, and wherein fluid injected through the needle passes through the lumen at the interior of the elongate member and through the tip at the distal end of the needle without passing through an interior of any of the plurality of filaments.

29. The system of claim 1, wherein the fitting is configured to provide the connection for the injection of fluid through the fitting separately from allowing for insertion of the RF probe into the lumen through the fitting.

30. The system of claim 1, wherein the fitting is at a proximal end of the needle such that the actuator is positioned distally relative to a proximal end of the fitting.

31. The system of claim 1, wherein the fitting comprises a Luer fitting.

32. The system of claim 31, wherein the Luer fitting is at a proximal-most position at a proximal end of the needle.

33. The system of claim 1, wherein, when the plurality of filaments are in the retracted position, the fitting is configured to connect to a fluid source and to permit fluid from the fluid source to pass through the fitting, through the lumen, and through the tip at the distal end of the needle.

34. The system of claim 33, wherein each filament of the plurality of filaments is devoid of any lumen therethrough for the transportation of fluid, and wherein fluid injected through the needle passes through the lumen at the interior of the elongate member and through the tip at the distal end of the needle without passing through an interior of any of the plurality of filaments.

35. The system of claim 33, further comprising tube that is a separate member relative to the elongate member, the tube defining the lumen at the interior of the elongate member.

36. The system of claim 35, wherein the tube comprises a conductive material, and wherein the conductive portion of the needle comprises the conductive material of the tube.

37. The system of claim 36, wherein the tube is configured to transport fluid therethrough, and wherein the tube is further configured to separately conduct therethrough RF energy emitted by the RF probe.

38. The system of claim 37, wherein the tube is further configured to conduct the RF energy into and through the tip and the plurality of filaments.

39. The system of claim 1, further comprising a tube that is a separate member relative to the elongate member, the tube defining the lumen at the interior of the elongate member.

40. The system of claim 39, wherein each filament of the plurality of filaments is devoid of any lumen therethrough for the transportation of fluid, and wherein fluid injected through the needle passes through the lumen defined by the tube and through the tip at the distal end of the needle without passing through an interior of any of the plurality of filaments.

41. The system of claim 39, wherein the tube comprises a conductive material, and wherein the conductive portion of the needle comprises the conductive material of the tube.

42. The system of claim 41, wherein the tube is configured to transport fluid therethrough when the RF probe is absent from the lumen, and wherein the tube is further configured to separately conduct therethrough RF energy emitted by the RF probe when the RF probe is present within the lumen.

43. The system of claim 42, wherein the tube is further configured to conduct the RF energy into and through the tip and the plurality of filaments.

44. The system of claim 39, wherein the tube is positioned at an interior of the elongate member when the plurality of filaments are in the retracted position.

45. The system of claim 39, wherein the tube is in fluid communication with the tip at the distal end of the elongate member when the plurality of filaments are in the retracted position.

46. The system of claim 39, wherein the fluid passes from a fluid source, through the fitting, and through the tube when the fluid source is coupled to the fitting, and wherein the RF probe is separately received within the tube when fluid is not being transported through the tube.

47. The system of claim 1, wherein a fluid source is coupled with the fitting and fluid is transported through the lumen to a target volume within the patient when the system is in a first operational state in which the RF probe is fully separated from the needle, such that none of the of the RF probe is within the needle, and wherein the lumen accepts the RF probe for delivery of RF energy to the target volume when the system is in a second operational state in which fluid is not transported through the lumen of the needle.

48. The system of claim 1, wherein the tip comprises a conductive material and defines a channel, and wherein a distal end of the RF probe is received within the channel of the tip of the needle when the RF probe is fully inserted into the needle.

49. The system of claim 48, wherein the conductive portion of the needle comprises the conductive material of the tip.

50. The system of claim 1, wherein the plurality of filaments extend distally beyond a distal end of the RF probe when the RF probe is fully inserted into needle and when the plurality of filaments are in the deployed position, such that when RF energy is delivered to the RF probe, the plurality of filaments conduct RF energy that emanates from the RF probe beyond the distal end of the RF probe to produce within the patient, during the RF ablation procedure, a lesion that is distally offset from the distal end of the RF probe.

51. A method comprising:

using the system of claim 1, wherein said using comprises:

inserting the needle into a patient;

rotating the actuator to transition the plurality of filaments from the retracted position to the deployed position; and

operating the RF probe, the tip, and the plurality of filaments as a monopolar electrode.

52. The method of claim 51, wherein said using further comprises inserting the RF probe into the lumen of the needle.

53. A system comprising:

an RF probe that comprises an electrode; and

a needle for insertion into a patient during an RF ablation procedure, the needle comprising:

a hub;

an elongate member fixed to the hub, the elongate member comprising a lumen at an interior thereof;

a tip fixed to the elongate member at a distal end of the needle, wherein the tip is shaped to pierce tissue of the patient;

a plurality of filaments;

an actuator interconnected to the plurality of filaments, wherein movement of the actuator in a first direction relative to the hub moves the plurality of filaments relative to the tip to a deployed position that extends distally beyond the tip, and wherein movement of the actuator in a second direction relative to the hub retracts the plurality of filaments to a retracted position in which the plurality of filaments are disposed within at least a portion of the elongate member; and

a fitting in fluid communication with the lumen, the fitting being configured to provide a connection for injection of fluid through the fitting and through the lumen, the fitting further being configured to allow for insertion of the RF probe into the lumen through the fitting,

wherein the lumen is configured to accept the RF probe therein such that the electrode of the RF probe physically contacts a conductive portion of the needle and thereby electrically connects the RF probe to the tip and the plurality of filaments, such that energy emitted by the RF probe passes through the tip and the plurality of filaments, and such that the electrode of the inserted RF probe, the tip, and the plurality of filaments operate together as a single monopolar RF electrode, and

wherein when the RF probe is fully separated from the needle in a non-inserted state, such that none of the RF probe is within the needle, the plurality of filaments of the needle are positionable in the retracted position, in which the plurality of filaments are disposed within said at least a portion of the elongate member.

54. The system of claim 53, wherein the needle further comprises a conductive tube that is a separate member relative to the elongate member, the conductive tube defining the lumen at the interior of the elongate member and further defining the conductive portion of the needle that the electrode of the RF probe physically contacts, wherein, when the RF probe is inserted into the lumen defined by the conductive tube, the conductive tube is configured to conduct RF energy emitted by the RF probe through the conductive tube and into and through the tip and the plurality of filaments.

55. The system of claim 54, wherein the fitting is configured to provide a connection to a fluid source for said injection of fluid through the fitting and through the lumen when the RF probe is fully separated from the needle in the non-inserted state, such that none of the RF probe is within the needle.

56. A system comprising:

an RF probe; and

a needle for insertion into a patient, the needle comprising:

a hub;

an elongate member fixed to the hub, the elongate member comprising a lumen at an interior thereof;

a tip fixed to the elongate member at a distal end of the needle, wherein the tip is shaped to pierce tissue of the patient;

a plurality of filaments;

an actuator interconnected to the plurality of filaments, wherein movement of the actuator in a first direction relative to the hub moves the plurality of filaments relative to the tip to a deployed position distally beyond the tip, and wherein movement of the actuator in a second direction relative to the hub retracts the plurality of filaments to a retracted position in which the plurality of filaments are disposed within at least a portion of the elongate member; and

a Luer fitting in fluid communication with the lumen, the Luer fitting being configured to provide a connection to a fluid source for injection of fluid through the Luer fitting and through the lumen, the Luer fitting further being configured to allow for insertion of an RF probe into the lumen through the Luer fitting,

wherein the lumen at the interior of the elongate member is configured to accept the RF probe therein to physically contact a conductive portion of the needle and thereby electrically connect the RF probe to the tip and the plurality of filaments, such that energy emitted by the RF probe passes through the tip and the plurality of filaments, and such that an electrode of the inserted RF probe, the tip, and the plurality of filaments operate together as a single monopolar RF electrode;

wherein the conductive portion of the needle is at a distal end of the needle.

57. The system of claim 56, wherein the Luer fitting is configured to be connected with the fluid source when the RF probe is fully separated from the needle in a non-inserted state, such that none of the RF probe is within the needle, and wherein the Luer fitting is further configured to separately permit the RF probe to be inserted into the lumen through the Luer fitting when the Luer fitting is not connected with the fluid source.

58. The system of claim 56, wherein the Luer fitting is configured to accept a Luer connector of the fluid source.

59. The system of claim 56, wherein the lumen is configured to deliver fluid through the tip at the distal end of the needle.

60. The system of claim 59, wherein each filament of the plurality of filaments is devoid of any lumen therethrough for the transportation of fluid, and wherein fluid injected through the needle passes through the lumen at the interior of the elongate member and through the tip without passing through an interior of any of the plurality of filaments.

61. The system of claim 56, wherein each filament of the plurality of filaments is devoid of any lumen therethrough for the transportation of fluid, and wherein fluid injected through the needle passes through the lumen at the interior of the elongate member and through the tip at the distal end of the needle without passing through an interior of any of the plurality of filaments.

62. The system of claim **56**, wherein the Luer fitting is at a proximal end of the needle such that the actuator is positioned distally relative to a proximal end of the Luer fitting.

63. The system of claim **62**, wherein the Luer fitting is at a proximal-most position at the proximal end of the needle.

64. The system of claim **56**, wherein, when the plurality of filaments are in the retracted position and the RF probe is fully separated from the needle in a non-inserted state, such that none of the RF probe is within the needle, the Luer fitting is configured to connect to the fluid source and to permit fluid from the fluid source to pass through the Luer fitting, through the lumen, and through the tip at the distal end of the needle.

65. The system of claim **64**, wherein each filament of the plurality of filaments is devoid of any lumen therethrough for the transportation of fluid, and wherein fluid injected through the needle passes through the lumen at the interior of the elongate member and through the tip at the distal end of the needle without passing through an interior of any of the plurality of filaments.

66. The system of claim **56**, further comprising a tube that is a separate member relative to the elongate member, the tube defining the lumen at the interior of the elongate member.

67. The system of claim **66**, wherein each filament of the plurality of filaments is devoid of any lumen therethrough for the transportation of fluid, and wherein fluid injected through the needle passes through the lumen defined by the tube and through the tip at the distal end of the needle without passing through an interior of any of the plurality of filaments.

68. The system of claim **66**, wherein the tube comprises a conductive material, and wherein the conductive portion of the needle comprises the conductive material of the tube.

69. The system of claim **68**, wherein the tube is configured to transport fluid therethrough, and wherein the tube is further configured to conduct therethrough RF energy emitted by the RF probe.

70. The system of claim **69**, wherein the tube is further configured to conduct the RF energy into and through the tip and the plurality of filaments.

71. The system of claim **66**, wherein the tube is positioned at an interior of the elongate member when the plurality of filaments are in the retracted position.

72. The system of claim **66**, wherein the tube is in fluid communication with the tip at the distal end of the elongate member when the plurality of filaments are in the retracted position.

73. The system of claim **66**, wherein the fluid passes from the fluid source, through the Luer fitting, and through the tube when the fluid source is coupled to the Luer fitting, and wherein the RF probe is separately received within the tube when fluid is not being transported through the tube.

74. The system of claim **56**, wherein the fluid source is coupled with the Luer fitting and fluid is transported through the lumen to a target volume within the patient when the system is in a first operational state in which the RF probe is fully separated from the needle, such that none of the of the RF probe is within the needle, and wherein the lumen accepts the RF probe for delivery of RF energy to the target volume when the system is in a second operational state in which fluid is not transported through the lumen of the needle.

* * * * *

IN THE UNITED STATES PATENT AND TRADEMARK OFFICE

BEFORE THE CENTRAL REEXAMINATION UNIT

METHODS AND SYSTEMS FOR SPINAL RADIO FREQUENCY NEUROTOMY	
Reissue Patent Appl. No. __/___,___	Confirmation No. ___
Reissue Filing Date: April 30, 2026	Examiner: _____
Patent No. 10,736,688	Group Art Unit: ___
Patent Filing Date: Apr. 15, 2016	Inventors: Robert E. Wright, et al.
Patent Grant Date: Aug. 11, 2020	Attorney Docket No. NBUS.001C1RE1

PRELIMINARY AMENDMENT

TO THE COMMISSIONER FOR PATENTS:

Prior to examination, the Applicant respectfully requests entry of the following amendment in this application for the reissue of U.S. Patent No. 10,736,688:

- **Amendments to the Specification** begin on page 2 of this paper.
- **Amendments to the Claims** reflected in the Listing of Claims that begins on page 3.
- **Remarks** that begin on page 21 of this paper.

If the Office believes that any additional fee is due, it is authorized to charge deposit account no. 50-5836.

AMENDMENTS TO THE SPECIFICATION

Please amend the following paragraph under the heading "RELATED APPLICATIONS" at line 4 of column 1 of U.S. Patent No. 10,736,688:

This is an application for the reissue of U.S. Patent No. 10,736,688, which granted on August 11, 2020 from U.S. Patent Application No. 15/098,673, filed April 14, 2016, which is a continuation of U.S. [p]Patent [a]Appl[ication]. [Ser.] No. 12/940,974, filed on Nov. 5, 2010, which is hereby incorporated by reference in its entirety and which claims [the benefit of] priority to U.S. Provisional Patent Appl. No. 61/280,557, filed on Nov. 5, 2009, and U.S. Provisional Patent Appl. No. 61/347,351, filed on May 21, 2010, both of which are hereby incorporated by reference in their entirety.

LISTING OF CLAIMS

The following listing of claims will replace all prior versions, and listings, of claims in the Application. Pursuant to 37 C.F.R. § 1.173(b)(2), all changes are shown with respect to U.S. Patent No. 8,654,400 and comply with the requirements set forth in 37 C.F.R. §§ 1.173(b) and (d).

1. (Original) A system comprising:

an RF probe; and

a needle for insertion into a patient during an RF ablation procedure, the needle comprising:

a hub;

an elongate member fixed to the hub, the elongate member comprising a lumen at an interior thereof;

a tip fixed to the elongate member at a distal end of the needle, wherein the tip is shaped to pierce tissue of the patient;

a plurality of filaments;

an actuator interconnected to the plurality of filaments, wherein movement of the actuator in a first direction relative to the hub moves the plurality of filaments relative to the tip to a deployed position distally beyond the tip, and wherein movement of the actuator in a second direction relative to the hub retracts the plurality of filaments to a retracted position in which the plurality of filaments are disposed within at least a portion of the elongate member; and

a fitting in fluid communication with the lumen, the fitting being configured to provide a connection for injection of fluid through the fitting and through the lumen,

the fitting further being configured to allow for insertion of the RF probe into the lumen through the fitting,

wherein the lumen at the interior of the elongate member is configured to accept the RF probe therein to physically contact a conductive portion of the needle and thereby electrically connect the RF probe to the tip and the plurality of filaments, such that energy emitted by the RF probe passes through the tip and the plurality of filaments, and such that the RF probe, the tip, and the plurality of filaments operate together as a single monopolar RF electrode,

wherein the conductive portion of the needle is at a distal end of the needle, and

wherein, when the RF probe is fully separated from the needle in a non-inserted state, such that none of the RF probe is within the needle, the plurality of filaments are movable via the actuator from the retracted position, in which the plurality of filaments are disposed within said at least a portion of the elongate member, to the deployed position.

2. (Original) The system of claim 1, wherein the actuator fits around at least a portion of the hub, and wherein the actuator is configured to rotate relative to the hub about a central longitudinal axis of the needle.

3. (Original) The system of claim 2, wherein the actuator is generally tubular.

4. (Original) The system of claim 1, wherein the needle further comprises a slide member coupled to the actuator and fixedly connected to the plurality of filaments, wherein the hub includes a cavity sized to house a protrusion of the slide member, and wherein the slide member is limited to a linear motion relative to the hub as the actuator is rotated.

5. (Original) The system of claim 4, wherein the slide member is configured to axially advance and retract without rotating relative to the hub.

6. (Original) The system of claim 1, wherein the tip comprises a fluid port in fluid communication with the lumen such that an anesthetic and/or an image enhancing dye may be introduced into a region around the tip through the fluid port.

7. (Original) The system of claim 1, wherein each filament of the plurality of filaments has a pre-set bias such that the filament is curved when in the deployed state.

8. (Original) The system of claim 1, wherein when each filament of the plurality of filaments is in the deployed position, the filaments extend outwardly from the tip.

9. (Original) The system of claim 8, wherein each filament comprises a distal end, wherein the distal end of each filament defines a point when each filament is in the deployed position, and wherein an average of all the points is offset from a central longitudinal axis of the elongate member.

10. (Original) The system of claim 1, wherein the plurality of filaments comprises three filaments, and wherein an angle between each pair of adjacent filaments is 120 degrees when each filament is in the deployed position.

11. (Original) The system of claim 1, wherein the plurality of filaments are configured to form a lesion having a pyramidal shape.

12. (Original) The system of claim 1, wherein the tip tapers to a point, and wherein the elongate member and the tip comprise a single unitary structure.

13. (Original) The system of claim 1, wherein a proximal end of the elongate member is fixed to the hub.

14. (Original) The system of claim 1, wherein the tip is asymmetrical, and wherein the hub comprises an indicator that is oriented to communicate an orientation of the asymmetrical tip.

15. (Original) The system of claim 1, wherein the hub and/or the actuator includes markings to indicate a depth of deployment of the plurality of filaments.

16. (Original) The system of claim 1, wherein the hub and/or the actuator includes detents to provide a tactile feedback of a position of the plurality of filaments.

17. (Original) The system of claim 1, wherein the RF probe comprises a cable for use in connecting the RF probe to a radiofrequency generator.

18. (Original) The system of claim 1, wherein the fitting is configured to be coupled to a fluid source and the lumen is configured to conduct fluid from the fluid source when the RF probe is not positioned within the needle.

19. (Original) The system of claim 1, wherein the fitting is configured to provide a connection to a fluid source for said injection of fluid through the fitting and through the lumen.

20. (Original) The system of claim 19, wherein the fitting comprises a Luer fitting configured to be connected with the fluid source when the RF probe is fully separated from the needle, such that none of the RF probe is within the needle, the Luer fitting further being configured to separately permit the RF probe to be inserted into the lumen through the Luer fitting when the Luer fitting is not connected with the fluid source.

21. (Original) The system of claim 19, wherein the fitting is configured to be connected with the fluid source and to permit fluid to pass through the fitting and through the lumen when the RF probe is not present within the lumen.

22. (Original) The system of claim 21, and wherein the fitting is further configured to permit the RF probe to be inserted into the lumen through the fitting when the fitting is not connected with the fluid source.

23. (Original) The system of claim 19, wherein the fitting is configured to accept a connector of the fluid source.

24. (Original) The system of claim 23, wherein the fitting comprises a Luer fitting and the connector of the fluid source comprises a Luer fitting.

25. (Original) The system of claim 19, wherein the lumen is configured to deliver fluid through the tip at the distal end of the needle.

26. (Original) The system of claim 25, wherein each filament of the plurality of filaments is devoid of any lumen therethrough for the transportation of fluid, and wherein fluid injected through the needle passes through the lumen at the interior of the elongate member and through the tip of the needle without passing through an interior of any of the plurality of filaments.

27. (Original) The system of claim 1, wherein the lumen is configured to deliver fluid through the tip at the distal end of the needle.

28. (Original) The system of claim 1, wherein each filament of the plurality of filaments is devoid of any lumen therethrough for the transportation of fluid, and wherein fluid injected through the needle passes through the lumen at the interior of the elongate member and through the tip at the distal end of the needle without passing through an interior of any of the plurality of filaments.

29. (Original) The system of claim 1, wherein the fitting is configured to provide the connection for the injection of fluid through the fitting separately from allowing for insertion of the RF probe into the lumen through the fitting.

30. (Original) The system of claim 1, wherein the fitting is at a proximal end of the needle such that the actuator is positioned distally relative to a proximal end of the fitting.

31. (Original) The system of claim 1, wherein the fitting comprises a Luer fitting.

32. (Original) The system of claim 31, wherein the Luer fitting is at a proximal-most position at a proximal end of the needle.

33. (Original) The system of claim 1, wherein, when the plurality of filaments are in the retracted position, the fitting is configured to connect to a fluid source and to permit fluid from the fluid source to pass through the fitting, through the lumen, and through the tip at the distal end of the needle.

34. (Original) The system of claim 33, wherein each filament of the plurality of filaments is devoid of any lumen therethrough for the transportation of fluid, and wherein fluid injected through the needle passes through the lumen at the interior of the elongate member and through the tip at the distal end of the needle without passing through an interior of any of the plurality of filaments.

35. (Original) The system of claim 33, further comprising tube that is a separate member relative to the elongate member, the tube defining the lumen at the interior of the elongate member.

36. (Original) The system of claim 35, wherein the tube comprises a conductive material, and wherein the conductive portion of the needle comprises the conductive material of the tube.

37. (Original) The system of claim 36, wherein the tube is configured to transport fluid therethrough, and wherein the tube is further configured to separately conduct therethrough RF energy emitted by the RF probe.

38. (Original) The system of claim 37, wherein the tube is further configured to conduct the RF energy into and through the tip and the plurality of filaments.

39. (Original) The system of claim 1, further comprising a tube that is a separate member relative to the elongate member, the tube defining the lumen at the interior of the elongate member.

40. (Original) The system of claim 39, wherein each filament of the plurality of filaments is devoid of any lumen therethrough for the transportation of fluid, and wherein fluid injected through the needle passes through the lumen defined by the tube and through the tip at the distal end of the needle without passing through an interior of any of the plurality of filaments.

41. (Original) The system of claim 39, wherein the tube comprises a conductive material, and wherein the conductive portion of the needle comprises the conductive material of the tube.

42. (Original) The system of claim 41, wherein the tube is configured to transport fluid therethrough when the RF probe is absent from the lumen, and wherein the tube is further

configured to separately conduct therethrough RF energy emitted by the RF probe when the RF probe is present within the lumen.

43. (Original) The system of claim 42, wherein the tube is further configured to conduct the RF energy into and through the tip and the plurality of filaments.

44. (Original) The system of claim 39, wherein the tube is positioned at an interior of the elongate member when the plurality of filaments are in the retracted position.

45. (Original) The system of claim 39, wherein the tube is in fluid communication with the tip at the distal end of the elongate member when the plurality of filaments are in the retracted position.

46. (Original) The system of claim 39, wherein the fluid passes from a fluid source, through the fitting, and through the tube when the fluid source is coupled to the fitting, and wherein the RF probe is separately received within the tube when fluid is not being transported through the tube.

47. (Original) The system of claim 1, wherein a fluid source is coupled with the fitting and fluid is transported through the lumen to a target volume within the patient when the system is in a first operational state in which the RF probe is fully separated from the needle, such that none of the of the RF probe is within the needle, and wherein the lumen accepts the RF probe for delivery of RF energy to the target volume when the system is in a second operational state in which fluid is not transported through the lumen of the needle.

48. (Original) The system of claim 1, wherein the tip comprises a conductive material and defines a channel, and wherein a distal end of the RF probe is received within the channel of the tip of the needle when the RF probe is fully inserted into the needle.

49. (Original) The system of claim 48, wherein the conductive portion of the needle comprises the conductive material of the tip.

50. (Original) The system of claim 1, wherein the plurality of filaments extend distally beyond a distal end of the RF probe when the RF probe is fully inserted into needle and when the plurality of filaments are in the deployed position, such that when RF energy is delivered to the RF probe, the plurality of filaments conduct RF energy that emanates from the RF probe beyond the distal end of the RF probe to produce within the patient, during the RF ablation procedure, a lesion that is distally offset from the distal end of the RF probe.

51. (Original) A method comprising:

using the system of claim 1, wherein said using comprises:

inserting the needle into a patient;

rotating the actuator to transition the plurality of filaments from the retracted position to the deployed position; and

operating the RF probe, the tip, and the plurality of filaments as a monopolar electrode.

52. (Original) The method of claim 51, wherein said using further comprises inserting the RF probe into the lumen of the needle.

53. (Original) A system comprising:

an RF probe that comprises an electrode; and

a needle for insertion into a patient during an RF ablation procedure, the needle comprising:

a hub;

an elongate member fixed to the hub, the elongate member comprising a lumen at an interior thereof;

a tip fixed to the elongate member at a distal end of the needle, wherein the tip is shaped to pierce tissue of the patient;

a plurality of filaments;

an actuator interconnected to the plurality of filaments, wherein movement of the actuator in a first direction relative to the hub moves the plurality of filaments relative to the tip to a deployed position that extends distally beyond the tip, and wherein movement of the actuator in a second direction relative to the hub retracts the plurality of filaments to a retracted position in which the plurality of filaments are disposed within at least a portion of the elongate member; and

a fitting in fluid communication with the lumen, the fitting being configured to provide a connection for injection of fluid through the fitting and through the lumen, the fitting further being configured to allow for insertion of the RF probe into the lumen through the fitting,

wherein the lumen is configured to accept the RF probe therein such that the electrode of the RF probe physically contacts a conductive portion of the needle and thereby electrically connects the RF probe to the tip and the plurality of filaments, such that energy emitted by the RF probe passes through the tip and the plurality of filaments, and such that the electrode of the inserted RF probe, the tip, and the plurality of filaments operate together as a single monopolar RF electrode, and

wherein when the RF probe is fully separated from the needle in a non-inserted state, such that none of the RF probe is within the needle, the plurality of filaments of the needle are positionable in the retracted position, in which the plurality of filaments are disposed within said at least a portion of the elongate member.

54. (Original) The system of claim 53, wherein the needle further comprises a conductive tube that is a separate member relative to the elongate member, the conductive tube defining the lumen at the interior of the elongate member and further defining the conductive portion of the needle that the electrode of the RF probe physically contacts, wherein, when the RF probe is inserted into the lumen defined by the conductive tube, the conductive tube is configured to conduct RF energy emitted by the RF probe through the conductive tube and into and through the tip and the plurality of filaments.

55. (Original) The system of claim 54, wherein the fitting is configured to provide a connection to a fluid source for said injection of fluid through the fitting and through the lumen when the RF probe is fully separated from the needle in the non-inserted state, such that none of the RF probe is within the needle.

56. (Original) A system comprising:

an RF probe; and

a needle for insertion into a patient, the needle comprising:

a hub;

an elongate member fixed to the hub, the elongate member comprising a lumen at an interior thereof;

a tip fixed to the elongate member at a distal end of the needle, wherein the tip is shaped to pierce tissue of the patient;

a plurality of filaments;

an actuator interconnected to the plurality of filaments, wherein movement of the actuator in a first direction relative to the hub moves the plurality of filaments relative to the tip to a deployed position distally beyond the tip, and wherein movement of the actuator in a second direction relative to the hub retracts the plurality of filaments to a retracted position in which the plurality of filaments are disposed within at least a portion of the elongate member; and

a Luer fitting in fluid communication with the lumen, the Luer fitting being configured to provide a connection to a fluid source for injection of fluid through the Luer fitting and through the lumen, the Luer fitting further being configured to allow for insertion of an RF probe into the lumen through the Luer fitting,

wherein the lumen at the interior of the elongate member is configured to accept the RF probe therein to physically contact a conductive portion of the needle and thereby electrically connect the RF probe to the tip and the plurality of filaments, such that energy emitted by the RF probe passes through the tip and the plurality of filaments, and such that an electrode of the inserted RF probe, the tip, and the plurality of filaments operate together as a single monopolar RF electrode;

wherein the conductive portion of the needle is at a distal end of the needle.

57. (Original) The system of claim 56, wherein the Luer fitting is configured to be connected with the fluid source when the RF probe is fully separated from the needle in a non-inserted state, such that none of the RF probe is within the needle, and wherein the Luer fitting is further configured to separately permit the RF probe to be inserted into the lumen through the Luer fitting when the Luer fitting is not connected with the fluid source.

58. (Original) The system of claim 56, wherein the Luer fitting is configured to accept a Luer connector of the fluid source.

59. (Original) The system of claim 56, wherein the lumen is configured to deliver fluid through the tip at the distal end of the needle.

60. (Original) The system of claim 59, wherein each filament of the plurality of filaments is devoid of any lumen therethrough for the transportation of fluid, and wherein fluid injected through the needle passes through the lumen at the interior of the elongate member and through the tip without passing through an interior of any of the plurality of filaments.

61. (Original) The system of claim 56, wherein each filament of the plurality of filaments is devoid of any lumen therethrough for the transportation of fluid, and wherein fluid injected through the needle passes through the lumen at the interior of the elongate member and through the tip at the distal end of the needle without passing through an interior of any of the plurality of filaments.

62. (Original) The system of claim 56, wherein the Luer fitting is at a proximal end of the needle such that the actuator is positioned distally relative to a proximal end of the Luer fitting.

63. (Original) The system of claim 62, wherein the Luer fitting is at a proximal-most position at the proximal end of the needle.

64. (Original) The system of claim 56, wherein, when the plurality of filaments are in the retracted position and the RF probe is fully separated from the needle in a non-inserted state, such that none of the RF probe is within the needle, the Luer fitting is configured to connect to the fluid source and to permit fluid from the fluid source to pass through the Luer fitting, through the lumen, and through the tip at the distal end of the needle.

65. (Original) The system of claim 64, wherein each filament of the plurality of filaments is devoid of any lumen therethrough for the transportation of fluid, and wherein fluid injected through the needle passes through the lumen at the interior of the elongate member and through the tip at the distal end of the needle without passing through an interior of any of the plurality of filaments.

66. (Original) The system of claim 56, further comprising a tube that is a separate member relative to the elongate member, the tube defining the lumen at the interior of the elongate member.

67. (Original) The system of claim 66, wherein each filament of the plurality of filaments is devoid of any lumen therethrough for the transportation of fluid, and wherein fluid injected through the needle passes through the lumen defined by the tube and through the tip at the distal end of the needle without passing through an interior of any of the plurality of filaments.

68. (Original) The system of claim 66, wherein the tube comprises a conductive material, and wherein the conductive portion of the needle comprises the conductive material of the tube.

69. (Original) The system of claim 68, wherein the tube is configured to transport fluid therethrough, and wherein the tube is further configured to conduct therethrough RF energy emitted by the RF probe.

70. (Original) The system of claim 69, wherein the tube is further configured to conduct the RF energy into and through the tip and the plurality of filaments.

71. (Original) The system of claim 66, wherein the tube is positioned at an interior of the elongate member when the plurality of filaments are in the retracted position.

72. (Original) The system of claim 66, wherein the tube is in fluid communication with the tip at the distal end of the elongate member when the plurality of filaments are in the retracted position.

73. (Original) The system of claim 66, wherein the fluid passes from the fluid source, through the Luer fitting, and through the tube when the fluid source is coupled to the Luer fitting, and wherein the RF probe is separately received within the tube when fluid is not being transported through the tube.

74. (Original) The system of claim 56, wherein the fluid source is coupled with the Luer fitting and fluid is transported through the lumen to a target volume within the patient when the system is in a first operational state in which the RF probe is fully separated from the needle, such that none of the of the RF probe is within the needle, and wherein the lumen accepts the RF probe for delivery of RF energy to the target volume when the system is in a second.

75. (New) The system of claim 1, wherein the elongate member comprises a tube that is 16 gauge or smaller.

76. (New) The system of claim 1, wherein the needle is an RF neurotomy needle.

77. (New) The method of claim 51, wherein the method is a spinal RF neurotomy procedure to ablate a medial branch nerve of a human patient, wherein:

the inserting step comprises inserting the needle into the human patient until the tip of the needle is in an ablation position to ablate the medial branch nerve;

the rotating step comprises, when the tip of the needle is in the ablation position, rotating the actuator to transition the plurality of filaments from the retracted position to the deployed position so as to extend the filaments into tissue of the human patient distally beyond the tip and outwardly away from a central longitudinal axis of the elongate member; and

IPR2024-01209
Avanos v. Stratus
Stratus Ex. 2052
Page 79 of 198

the operating step comprises, when the plurality of the filaments are in the deployed position, operating the RF probe, the tip, and the plurality of filaments as a monopolar electrode so as to ablate the medial branch nerve.

REMARKS

Specification Amendments

The first paragraph of the patent is amended to state that this is a reissue application and to refer to the original patent.

Claim Amendments

The above listing of the claims indicates that all original claims 1-74 are not amended. New claims 75-77 are added. New claims 75 and 76 depend from system claim 1. New claim 77 depends from method claim 51.

Support for Claim Amendments

Support for the new claim can be found at, for example, the following paragraphs of the '688 Patent:

Claim	Illustrative Examples of Support
75	Col. 8, ll. 3-8.
76	Col. 1, ll. 19-20, 58-62; col. 2, ll. 46-56; col. 3, ll. 36-44; col. 5, ll. 1-39; col. 8, ll. 12-16.
77	Col. 2, ll. 46-59; col. 4, ll. 34-56; col. 10, ll. 30-56; col. 17, ll. 55-61; col. 25, ll. 44-67; col. 26, ll. 1-58; col. 28, ll. 49-67; col. 29, ll. 1-67; col. 30, ll. 1-51; Figs. 1, 6, 12, 14, 15.

Patentability of the Claims

The '688 Patent was the subject of IPR2024-01210 and IPR2024-01211, each resulting in a final written decision dated March 6, 2026, collectively finding all claims of the '688 Patent obvious over at least U.S. Patent No. 6,146,380 (Racz), U.S. Patent Appl. Publ. No. 2005/0059964 (Fitz), and U.S. Patent Appl. Publ. No. 2007/0016183 (Lee).

Similar results occurred in IPR2024-01209 and IPR2024-01212, each concerning a different patent related to the '688 Patent. Both of those cases will be reviewed on appeal at the U.S. Court of Appeals for the Federal Circuit.

In all four of the above-noted IPRs, the petitioner argued that "Racz's modified device" was an obvious variant of the teachings of Racz, Fitz, and Lee falling within the scope of the claims. Racz's modified device was presented in the IPR petitions as follows:

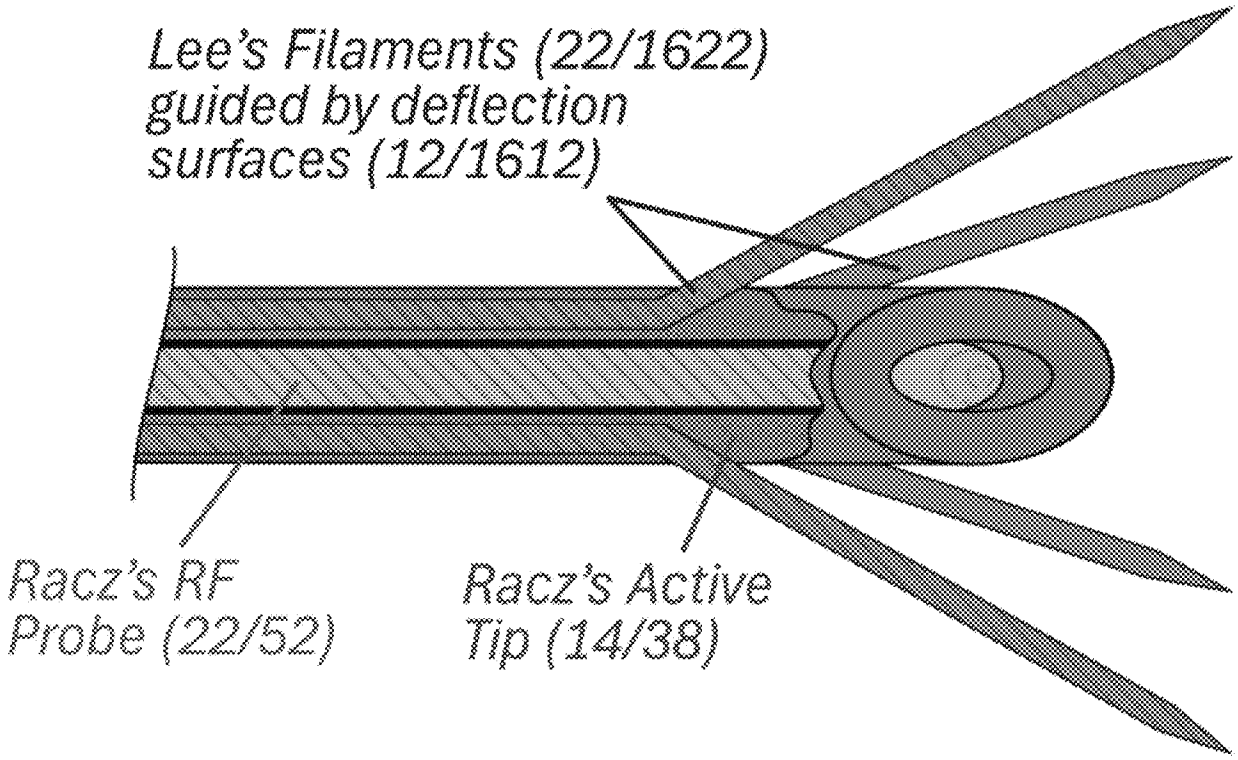

IPR2024-01210 Paper 1 (Petition) at 26; *see also id.* at 41, 42, 59.

Racz's modified device starts with Racz's needle and modifies it by forming long narrow passages within the sidewall of the needle and placing filaments like Lee's filaments/tines in those long narrow passages. As taught by Lee, the filaments/tines are deployable and retractable and function to increase the ablation volume when deployed as shown in the illustration above.

Stratus, the patent owner, disagreed and made number of counterarguments. For example, Stratus argued that a person of ordinary skill in the art (POSITA) would not have had a reasonable expectation of success to make the long narrow channels in the needle's sidewall of Racz's modified device. In particular, Stratus presented evidence (1) from a clinician expert witness, Dr. Marc A. Russo, an interventional pain-specialist physician who has performed thousands of RF neurotomy procedures, that RF neurotomy needles were known in the art at the time of the invention to be no larger than 16 gauge because larger needles would be too stiff to guide to a target nerve and cause other complications and (2) from a medical-device engineering expert (Peter Crosby) that it would not have been reasonably possible for a POSITA to form the passages in the needle sidewall, as required by Racz's modified device, by any known technique, as the sidewall would be less than 230 μm (micrometers or microns) thick for a 16-gauge needle, and it would have been impossible to form narrow straight passages down the length of such a thin wall. Stratus's principal evidence on point (1) in the IPRs was Exhibit 2001, a declaration by Dr. Russo. Stratus's principal evidence on point (2) in the IPRs was Exhibit 2006, a declaration by Mr. Crosby. Stratus's evidence on both of those points was essentially unrefuted.

However, the Board panel disregarded all of the evidence on point (2) because the Board panel disagreed with Dr. Russo on point (1). Even though no expert presented contrary evidence on point (1), the Board panel instead interpreted the following passage from Racz as teaching that a neurotomy needle could be as large as 10 gauge:

> Those individuals skilled in the art will recognize that many variations of the electrode geometries depicted in FIGS. 1-3 are possible without departing from the invention. Various sized electrodes can be made, from extremely small gauges (e.g., 30 gauge) to much larger sizes (e.g., 10 gauge). Also, the shape and degree of tip curvature may vary widely. The shape of the tip and the extent of insulation vs. exposed electrode can be variable, depending on the application. For example, in FIGS. 1 and 2, the

> exposure of the tip 14 or 38 may be only on one side of the cannula to facilitate directional stimulation or ablation; the exposed portion of the tip need not extend all the way around the tip azimuthally.

Racz at column 8, lines 10-22.

The Board panel interpreted this passage to mean that Racz taught a neurotomy needle as large as 10 gauge and credited this passage – as so interpreted – over Dr. Russo's testimony, which the Board panel characterized as "prepared specifically for litigation." IPR2024-01210 Paper 71 (FWD) at 44.

Stratus strongly disagrees and is seeking reversal of that finding in its appeals of IPR2024-01209 and IPR2024-01212 at the Federal Circuit. In a nutshell, while Racz discloses as a preferred embodiment an RF neurotomy needle, Racz's disclosure is not limited to neurotomy, and the only reasonable interpretation of the passage of Racz quoted above is that the full range of needle sizes mentioned (10-30 gauge) includes non-neurotomy needles as well. Racz's innovation is an RF ablation needle with a bent tip, and Racz makes clear that notwithstanding the fact that his preferred embodiment is for neurotomy, other clinical applications are possible for his bent-tip ablation needle:

> Furthermore, certain exemplary clinical applications have been discussed herein as those in which the invention can be successfully employed to the clinician's advantage. However, the invention is not limited to use in such applications, and other medical and surgical procedures would be apparent to a practitioner of ordinary skill.
>
> Thus, while certain exemplary structures and operations have been described, the invention is not so limited, and its scope is to be determined according to the claims set forth below.

Racz at column 9, lines 12-22.

In fact, the claims of Racz are not limited to neurotomy, but instead refer to a more general "target region in the patient's body." The target region could be a nerve (as in neurotomy) or another type of tissue (as in other clinical applications).

To remove all doubt on this point, Stratus supplements the evidentiary record in this reissue application by submitting Rule-132 declarations from (a) Dr. Russo and (b) Dr. Philip Finch, who is a co-inventor on the Racz patent. Dr. Finch explains in his declaration that 16 gauge is the maximum size of an RF neurotomy needle and that the Board panel's contrary interpretation of his patent is erroneous. Dr. Russo explains in his declaration that he learned from Dr. Gabor Racz – the first-named inventor on the "Racz" patent who passed away in 2025 – that RF neurotomy needles should be 16-22 gauge.

New claims 75 and 76 recite that "the elongate member comprises a tube that is 16 gauge or smaller" and that "the needle is an RF neurotomy needle," respectively. New method claim 77 is drawn to "a spinal RF neurotomy procedure to ablate a medial branch nerve of a human patient." These claims are non-obvious over Racz, Fitz, and Lee for at least the reason that a POSITA would not have had a reasonable expectation of success to make Racz's modified device "16 gauge or smaller" or as "a neurotomy needle" or for "a spinal RF neurotomy procedure to ablate a medial branch nerve of a human patient."

Conclusion

If the Examiner has any concerns about this application, or if the undersigned can assist in expediting the allowance of the application, the Examiner is invited to call the undersigned attorney.

Respectfully submitted,

Date: *2026 Apr. 30*

By: */ M.C. Phillips /*

Matthew C. Phillips
Registration No. 43,403

LAURENCE & PHILLIPS IP LAW LLP
1050 Connecticut Ave., NW, Suite 500
Washington, DC 20036

Telephone: (503) 964-1129

Email: mphillips@lpiplaw.com

Attorney Docket No. NBUS.001C1RE1

I, Marc Andrew Russo, declare as follows:

1. I submit this declaration in support of Stratus Medical, LLC (Stratus) to explain further my interpretation of the "Racz" patent (U.S. Patent No. 6,146,380), particularly the passage at column 8, lines 10-15, which identifies a size range for "electrodes . . . from extremely small gauges (e.g., 30 gauge) to much larger sizes (e.g., 10 gauge)."

2. I have previously stated that this full 10-30 gauge range is not applicable to RF neurotomy needles. Specifically, I submitted a declaration (Ex. 2001) in IPR2024-01209, IPR2024-01210, IPR2024-01211, and IPR2024-01212 in which I explained that a skilled person knowledgeable of neurotomy would know that neurotomy needles are sized from 16 gauge to 22 gauge. I explained that in paragraphs 155-168 of my declaration, which I incorporate into this declaration and reiterate as my testimony and opinion.

3. My credentials and qualifications are presented in the above-referenced declaration. I am a pain-specialist physician with a clinical practice that includes frequent radiofrequency neurotomy procedures. I have extensively researched, written, and lectured about radiofrequency neurotomies.

4. Dr. Gabor Racz, the first named inventor on the Racz patent (along with the second-named inventor, Dr. Philip Finch), was someone I knew professionally and personally from approximately 1999 until his death in 2025. Dr. Racz was also an interventional pain-specialist physician (as is Dr. Finch).

5. Dr. Racz was a pioneer in radiofrequency neurotomy who contributed to my understanding of radiofrequency neurotomy procedures and equipment. I first met Dr. Racz in 1999 at a professional conference in Cleveland, Ohio, USA,

where I arranged a private session with him and he demonstrated a radiofrequency neurotomy procedure while I observed.

6. During that session, Dr. Racz taught me what sizes of needles he would use in radiofrequency neurotomy procedures. I first learned from him that a radiofrequency neurotomy needle should be approximately 16-22 gauge.

7. I know that Dr. Racz never believed that a neurotomy needle could be larger than 16 gauge or smaller than 22 gauge. I therefore reiterate that it is not correct to interpret the statement at column 8, lines 10-15 of the Racz patent to apply to neurotomy needles.

8. Since my private session with Dr. Racz I have performed thousands of radiofrequency neurotomy procedures, and that repeated experience of holding a neurotomy needle in my hands as I insert it into a patient and direct it to its target site has confirmed that a neurotomy needle ranges from 16 gauge to 22 gauge. As I explained in my above-referenced declaration, a needle larger than 16 gauge is too stiff to navigate with the required precision, and a needle smaller than 22 gauge is insufficiently stiff to navigate with the required precision, through the patient's anatomy.

9. I also note that another reason that a needle as large as 10 gauge would be inappropriate for a radiofrequency neurotomy procedure is that it would cause so much pain to the patient that general anesthesia would likely be required. But many radiofrequency neurotomy procedures should not be performed under general anesthesia because the patient must be able to react – and the physician must be able to observe the reaction – during the procedure.

10. Also, a 10-gauge needle would likely create too large an ablation zone and cause unwanted damage to surrounding tissue during an RF neurotomy procedure.

11. I have been compensated by Stratus for providing my analysis and testimony, including providing this declaration. I have no financial interest in Stratus or it patents, and my compensation is not dependent on the outcome of this case or any legal proceeding involving Stratus. My compensation does not in any way affect the substance of my testimony in this declaration.

12. I declare that all statements made herein of my own knowledge are true and that all statements made on information and belief are believed to be true. I further declare that these statements were made with the knowledge that willful false statements and the like so made are punishable by fine or imprisonment, or both under Section 1001 of the Title 18 of the United States Code, and that such willful false statements may jeopardize the validity or enforceability of a patent granting from an application in which this declaration is submitted.

Executed this 27 day of April 2026 in Newcastle, Australia.

Marc Russo

Marc Andrew Russo

I, Philip Finch, declare as follows:

1. I am a physician with a degree in medicine from the University of Western Australia. I began my medical career as an anesthesiologist. Until my retirement last month I worked in the field of pain medicine since 1978 and exclusively as a pain medicine specialist since 1987. In particular, I practiced interventional pain medicine, frequently using local anesthetic nerve blocks and radiofrequency (RF) lesioning of a number of spinal and other structures. I have previously taught these procedures at numerous cadaver workshops internationally, which are listed in my curriculum vitae. I frequently performed such procedures treating posterior facet joint pain (zygapophyseal joints) and intervertebral disc pain as the origin for spinal pain. For example, I estimate that I have performed many thousands of RF nerve lesioning (also called "RF neurotomy") procedures over the last approximately 35 years. A copy of my *curriculum vitae* is attached to this declaration (Attachment A).This lists at least 77 peer reviewed publications and 5 book chapters with myself as an author.

2. I have developed equipment for radiofrequency lesioning of spinal nerves, including curved radiofrequency electrodes and the discTRODE, an RF annuloplasty procedure used to treat chronic, discogenic low back pain by the application of heat to the intervertebral disc annulus. I have filed for and obtained several patents for inventions in this technological space, including, for example, U.S. Patent No. 6,146,380, which is entitled "Bent Tip Electrical Surgical Probe" ("US'380 Patent"). I am a co-inventor on that patent along with Dr. Gabor B. Racz, a colleague who recently passed away and was also an interventional pain specialist physician. I have been retained by Laurence & Phillips IP Law, which represents Stratus Medical, LLC (Stratus), to provide my independent expert opinion interpreting the following passage of my US'380 Patent (column 8, lines 10-22) (complete copy included as Attachment B):

> Those individuals skilled in the art will recognize that many variations of the electrode geometries depicted in FIGS. 1-3 are possible without departing from the invention. Various sized electrodes can be made, from extremely small gauges (e.g., 30 gauge) to much larger sizes (e.g., 10 gauge). Also, the shape and degree of tip curvature may vary widely. The shape of the tip and the extent of insulation vs. exposed electrode

can be variable, depending on the application. For example, in FIGS. 1 and 2, the exposure of the tip 14 or 38 may be only on one side of the cannula to facilitate directional stimulation or ablation; the exposed portion of the tip need not extend all the way around the tip azimuthally.

3. My opinion is that this passage of the US'380 Patent should not be interpreted as implying that an RF neurotomy needle can be as large as 10 gauge. I consider 16 gauge is the maximum size for an RF neurotomy needle. Other techniques for performing a neurotomy include the use of a cryoprobe for freezing rather than heating nerves. Cryoprobes typically have a larger diameter of 16-14 gauge.

4. The reasons for this are explained in the attached declaration of A/Prof Marc Andrew Russo (Attachment C), specifically at paragraphs 155-169 on pages 50-53 and paragraphs 230-236 on pages 69-70. I largely agree with those paragraphs and I incorporate them into this declaration as my own testimony.

5. Dr. Russo, whom I have known professionally and personally for many years, is highly regarded as a world-leading interventional pain specialist physician.

6. I also note that an additional reason that a 10-gauge needle would be inappropriate for RF neurotomy procedures is that inserting such a large needle into a patient would be so painful that general anesthesia would be required. If local anesthesia were to be employed instead, then significant and even toxic amounts of a local anesthetic agent would be required for the procedure, preventing appreciation and proper monitoring of electrical stimulating currents (vide infra). Also, the ensuing large RF thermal lesion, or burn, can cause severe post-operative pain and even inadvertent motor nerve injury. RF neurotomy procedures are almost never performed under general anesthesia because it is desirable to monitor the patient's awake responses during the procedure to ensure that the appropriate nerves are electrically stimulated and subsequently lesioned. Both sensory and motor nerves when stimulated elicit different sensations and reactions in the patient. A sensory stimulation is felt as a tingling sensation (paresthesia) whereas a motor nerve stimulation can be seen as a muscle twitch. Eliciting a motor twitch when it is intended to stimulate a sensory nerve only, may indicate inadvertent proximity to a motor nerve. Thermal

P.M.F.

lesioning of motor nerves when not intended, can cause significant neurological injury, even partial paralyses of limbs.

7. The broad needle size range in the above-quoted paragraph of the US'380 Patent was stated to provide flexibility to claim the subject matter of that patent in various ways. But someone knowledgeable about RF neurotomy would understand that the full range of needle sizes mentioned in that paragraph of the patent cannot possibly apply to an RF neurotomy needle. The full range of needle sizes mentioned in that paragraph makes sense if the reader understands that the paragraph is meant to cover variations of the needle for applications in addition to RF neurotomy. In other words, we (Dr. Racz and I, the inventors) were trying to provide a basis to apply our bent-tip innovation to non-neurotomy needles. That is why that paragraph says, "many variations of the electrode geometries depicted in FIGS. 1-3 are possible." We meant to include non-neurotomy variations, which may be larger or smaller than neurotomy needles. While the focus of the US'380 Patent is neurotomy, we (Dr. Racz and I) explicitly contemplated and wished to cover other medical applications. Thus, the US'380 Patent states the following at column 9, lines 12-22:

> Furthermore, certain exemplary clinical applications have been discussed herein as those in which the invention can be successfully employed to the clinician's advantage. However, the invention is not limited to use in such applications, and other medical and surgical procedures would be apparent to a practitioner of ordinary skill.
>
> Thus, while certain exemplary structures and operations have been described, the invention is not so limited, and its scope is to be determined according to the claims set forth below.

In fact, the claims of the US'380 Patent do not appear to me to be limited to neurotomy but instead refer to a more general "target region in the patient's body." The target region could be a nerve (as in neurotomy) or another type of tissue such as an intervertebral disc

8. I am being compensated for my time to provide this opinion, including providing this declaration. I have no direct or indirect financial interest in Stratus or any of its patents, and my compensation is not dependent on the outcome of any cases

involving Stratus. My compensation does not in any way affect the substance or veracity of my testimony in this declaration.

9. I declare that all statements made herein of my own knowledge are true and that all statements made on information and belief are believed to be true. I further declare that these statements were made with the knowledge that willful false statement and the like so made are punishable by fine or imprisonment, or both under Section 1001 of the Title 18 of the United States Code, and that such willful false statements may jeopardize the validity or enforceability of the Stratus Patent.

Executed this 28th day of April 2026 in PERTH, Australia.

Philip Finch

CURRICULUM VITAE

NAME	Philip Michael FINCH		
DATE OF BIRTH	3 September 1942		
QUALIFICATIONS	MBBS	1969	Western Australia
	DRCOG	1972	London
	FFARCS	1975	London
	FFPMANZCA	1999	Australia
	FIPP	2002	World Institute of Pain
HONOURS	The Pask Certificate of Honour awarded by the Council of the Association of Anaesthetists of Great Britain and Ireland. 1977.		

POST GRADUATE EXPERIENCE:

1969 (pre-registration year)	6 months Medicine, 6 months Surgery. Royal Perth Hospital
15/12/70 – 09/03/71	Casualty Officer St Mary's Hospital, London.
1971 (6 months)	Obstetrics & Gynaecology House Officer Hillingdon Hospital, Middlesex.
07/02/71 – 06/08/72	Anaesthetic Senior House Officer London Hospital, Whitechapel, London.
01/09/73 – 30/04/74	Anaesthetic Senior House Officer St Bartholomew's Hospital, London.
01/05/74 – 30/04/75	Anaesthetic Registrar St Bartholomew's Hospital, London.
01/05/75 – 10/10/75	Anaesthetic Registrar Hospital for Sick Children, Great Ormond Street, London.
07/01/76 – 06/01/78	Anaesthetic Senior Registrar Sir Charles Gairdner Hospital, Perth.
07/01/78 – 28/02/86	Visiting Consultant Department of Anaesthesia, Intensive Care & Pain Relief Clinic, Sir Charles Gairdner Hospital, Perth.
28/02/86 – 1988	Co-ordinator Pain Management Clinic, Sir Charles Gairdner Hospital, Perth.

1988 – 1990	Private Practice Pain Management
1990 – Present	Medical Director Perth Pain Management Centre, South Perth. A multidisciplinary Pain Centre formed to diagnose and manage chronic pain.
2002	Elected to the Board of the World Institute of Pain β examiner for Diploma of Interventional Pain Medicine
2007	Adjunct Professor in the School of Psychology, Division of Health Sciences at Murdoch University, Perth.
2011	Secretary to the World Institute of Pain
2013	Adjunct Professor in the School Medicine, Notre Dame University
2019	Board of Neuromodulation Society of Australia and New Zealand
2026	Retired from Medical Practice 3rd March 2026

PUBLICATIONS:

Journal Articles

1. Finch P and Nancekievill D. The role of hospital mobile medical teams at a major accident. B J Hosp Med 1975; 13 (5): 601-610

2. Finch P and Nancekievill D. The role of hospital medical teams at a major accident. Anaesthesia 1975; 30: 666-676

3. Hamilton T and Finch P. Basic Disaster Kit in Western Australia. Proc. International Conference on Disaster Medicine, Cape Town, August 1979, Eds MacMahon and Jooste. Rotterdam: Balkema Publishers.

4. Finch P, Ingram D, Henstridge J and Catchpole B. The relationship of sleep stage to the migrating gastrointestinal complex of man. Gastrointestinal Motility, Ed. Christensen J. 1980; New York: Raven Press. 261-265

5. Finch P, Ingram D, Henstridge J and Catchpole B. The relationship of fasting gastroduodenal motility to the sleep cycle. Gastroenterology 1982; 83: 605-612

6. Finch P and Hamilton T. Early documentation of disaster victims. Anaesthesia 1982; 37: 1185-1189

7. Pullan P, Finch P, Yuen R and Watson F. Endogenous opiates modulate release of growth hormones in response to acupuncture. Life Sciences 1983; 32: 1705-1709

8. Goucke C, Lovegrove F, Finch P. Lumbar Sympathectomy: spread of radiopharmaceuticals following a single needle technique. British Journal of Anaesthetics 1987; 59: 944-945

9. Salmon J, Finch P, Lovegrove F, Warwick A. Mapping the spread of epidural phenol in cancer pain patients by radionuclide admixture and epidural scintigraphy. The Clinical Journal of Pain 1992; 8: 18-22

10. Drummond P, Finch P. Reflex control of facial flushing during body heating in man. Brain 1989; 112: 1351-1358

11. Finch P and Khangure M. Analgesic discography and magnetic resonance imaging (MRI). 6th World Congress on Pain. Adelaide, Australia: IASP. Pain (Supplement) 1990; 5: S282

12. Drummond P, Finch P and Smyth G. Reflex sympathetic dystrophy: the significance of differing plasma catecholamine concentrations in affected and unaffected limbs. Brain 1991; 114: 2025-2036

13. Taylor J and Finch P. Acute injury of the neck: anatomical and pathological basis of pain. Annals Academy of Medicine 1993; 22 (2): 1-7

14. Drummond P, Finch P and Gibbons I. Microneuromas in reflex sympathetic dystrophy. 7th World Congress on Pain. Paris, France, August 1993. Abstract 1504: 563-564

15. Taylor J and Finch P. Neck sprain. The Australian Family Physician 1993; 22 (9): 1623-1629

16. Finch P. Commercial videotape productions 1992:
    1. Percutaneous Radiofrequency Cordotomy
    2. Trigeminal Radiofrequency Cordotomy
    3. S1 Radiofrequency Ganglionotomy

17. Harrison W, Ginzler M, Salmon J, Robinson A, and Finch P. Exacerbation of knee pain post-arthroscopy: a survey. 7th World Congress on Pain. Paris, France, August 1993. Abstract 1502: 563.

18. Banham N and Finch P et al. Prolonged envenomation from red back spider. Medical Journal of Australia 1994: 161: 379-381

19. Drummond P and Finch P et al. Plasma neuropeptide y in the symptomatic limb of patients with causalgic pain. Clinical Journal Autonomic Research 1994; 4: 113-116

20. Drummond P, Skipworth S and Finch P. Alpha-adrenoceptors in normal and hyperalgesic human skin. Clinical Science 1996; 90: 1-5

21. Drummond P, Finch P and Gibbons I. Innervation of hyperalgesic skin in patients with complex regional pain syndrome. The Clinical Journal of Pain 1996; 10

22. Parnham A, Low A, Finch P, Perlman D and Thomas M. Recurrent graft pain following renal autotransplantation for loin pain haematuria syndrome. British Journal of Urology 1996; 78: 25-28

23. Parnham A, Low A, Perlman D, Finch P and Thomas M. Recurrent pain in renal autotransplants for loin pain haematuria syndrome. Kidney International 1996; 50: 1392-1424

24. Finch P, Racz G and McDaniel K. A curved approach to nerve blocks and radiofrequency lesioning. Pain Digest 1997; 7: 251-257

25. Finch P, Roberts L, Price L, Hadlow N, and Pullan P. Hypogonadism in patients treated with intrathecal morphine. The Clinical Journal of Pain 2000; 16 (3): 251-254

26. Roberts L, Finch P, Goucke R, and Price L. Outcome of intrathecal opioids in chronic non-cancer pain. European Journal of Pain 2001; 5 (4): 353-361

27. Drummond P, Finch P et al. Pain increases during sympathetic arousal in patients with chronic regional pain syndrome. Neurology 2001; 57 (7): 1296-1303

28. Raj P, Chado H, Finch P et al. Painless electrodiagnostic current perception threshold and pain tolerance threshold valves in CRPS subjects and healthy controls: a multicentre study. Pain Practice 2001; 1 (1): 53-60

29. Roberts L and Finch P et al. Sex hormone suppression by intrathecal opioids – a prospective study. The Clinical Journal of Pain 2002; 18 (3): 144-148

30. Finch P. The use of radiofrequency heat lesions in the treatment of lumbar discogenic pain. Pain Practice 2002; 2 (3): 235-240

31. Playford D, Kulkarni H, Thomas M, Vivian J, Low A, Mander J, Perlman D, Finch P Intra-ureteric capsaicin in loin pain haematuria syndrome: efficacy and complications. BJU International 2002; 90 (6): 518-521

32. Drummond PD and Finch PM. Persistence of pain induced startle and forehead cooling after sympathetic blockade in patients with complex regional pain syndrome. Journal of Neurology, Neurosurgery and Psychiatry 2004; 75(1): 98-102

33. Finch PM. Radiofrequency denervation of the annulus fibrosus: a rationale. Techniques in Regional Anesthesia and Pain Management 2004; 8(1): 41-45

34. Drummond PD and Finch PM. Sympathetic nervous system involvement in the syndrome of painful legs and moving toes. The Clinical Journal of Pain 2004; 20: 370-372

35. Finch PM, Price LM, and Drummond PD. Direct radiofrequency heating of painful annular disruptions: 1 year outcomes. J Spinal Disord Tech 2005; 18(1): 6-13

36. Drummond PD and Finch PM. Sensory changes in the forehead of patients with complex regional pain syndrome. Pain 2006; 123: 83-89

37. Finch P. Technology Insight: imaging of low back pain. Nature Clinical Practice Rheumatology 2006; 2: 554-61

38. Drummond PD, Hassard S and Finch PM. Trigeminal neuralgia, migraine and sympathetic hyperactivity in a patient with Parry-Romberg syndrome. Cephalalgia 2006: 26: 1146-1149

39. Podhajsky RJ and Finch PM. Effects of monopolar radiofrequency heating on intradiscal pressure in sheep. The Spine Journal 2007; 7: 229-234

40. Gibbs GF, Drummond PD, Finch PM, Phillips JK. Unravelling the pathophysiology of complex regional pain syndrome: focus on sympathetically maintained pain. Clinical and Experimental Pharmacology and Physiology 2008; 35: 717-724

41. Finch PM, Knudsen L, and Drummond P. Reduction of allodynia in patients with Complex Regional Pain Syndrome: A double-blind placebo controlled trial of topical Ketamine. Pain 2009; 146: 18-25.

42. Dawson LF, Phillips JK, Finch PM, Inglis JJ, Drummond PD. Expression of a(1)-adrenoceptors on peripheral nociceptive neurons. Neuroscience 2011; 175: 300-314.

43. Knudsen L, Finch PM, Drummond PD. The specificity and mechanisms of hemilateral sensory disturbances in complex regional pain syndrome. Journal of Pain 2011; 12(9): 985-990.

44. Castleden WM, Shearman D, Crisp G, Finch P. The mining and burning of coal: effects on health and the environment. Medical Journal of Australia 2011; 195(6): 333-335.

45. Drummond PD, Finch PM. A disturbance in sensory processing on the affected side of the body increases limb pain in complex regional pain syndrome. Clin J Pain 2014; 30(4): 301-306.

46. Drummond ES, Dawson LF, Finch PM, Bennett GJ, Drummond PD. Increased expression of cutaneous α1-adrenoceptors after chronic constriction injury in rats. J Pain 2014; 15(2): 188-196.

47. Drummond PD, Drummond ES, Dawson LF, Mitchell V, Finch PM, Vaughan CW, Phillips JK. Upregulation of α1-adrenoceptors on cutaneous nerve fibres after partial sciatic nerve ligation and in complex regional pain syndrome type II. Pain 2014; 155(3): 606-616.

48. Birklein F, Drummond PD, Li W, Schlereth T, Albrecht N, Finch PM, Dawson LF, Clark JD, Kingery WS. Activation of cutaneous immune responses in complex regional pain syndrome. J Pain 2014;15(5):485-95.

49. Finch PM, Drummond ES, Dawson LF, Phillips JK, Drummond PD. Up-regulation of cutaneous α1-adrenoceptors in complex regional pain syndrome type I. Pain Med 2014;15(11):1945-1956.

50. Drummond PD and Finch PM. Sympathetic blockade for complex regional pain syndrome. Pain 2014;155(1):2218-2219.

51. Drummond ES, Dawson LF, Finch PM, Li W, Guo TZ, Kingery WS, Drummond PD. Increased bilateral expression of α_1-adrenoceptors on peripheral nerves, blood vessels and keratinocytes does not account for pain or neuroinflammatory changes after distal tibia fracture in rats. Neuroscience 2014; 281C: 99-109.

52. Finch PM, Price LM, Pullan PT, Drummond PD. Effects of testosterone treatment on bone mineral density in hypogonadal men receiving intrathecal opioids. Pain Pract 2015; 15(4): 308-313.

53. Drummond PD, Dawson LF, Finch PM, Drummond ES, Wood FM, Fear MW. Up-regulation of cutaneous α_1-adrenoceptors after a burn. Burns 2015; 41(6): 1227-1234.

54. Finch PM, Drummond PD. Topical treatment in pain medicine: from ancient remedies to modern usage. Pain Manag 2015; 5(5): 359-371.

55. Drummond ES, Maker G, Birklein F, Finch PM, Drummond PD. Topical prazosin attenuates sensitivity to tactile stimuli in patients with complex regional pain syndrome. Eur J Pain 2016; 20(6):926-935.

56. Jo D, Finch PM, Oh J. Epiduroscopic laser neural decompression for removal of L2–3 disc herniation in a patient with symptoms suggestive of L5 nerve root involvement. Pain Med 2016; 17(7): 1386-1388.

57. Huang J, Ni Z, Finch P. Gasserian ganglion and retrobulbar nerve block in the treatment of ophthalmic postherpetic neuralgia: a case report. Pain Pract 2017; 17(7): 961-967

58. Suhnan AP, Finch PM, Drummond PD. Hyperacusis in chronic pain: neural interactions between the auditory and nociceptive systems. Int J Audiol 2017; 56(11): 801-809.

59. Drummond PD, Finch PM, Birklein F, Stanton-Hicks M, Knudsen LF. Hemisensory disturbances in patients with complex regional pain syndrome. Pain 2018; 159(9): 1824 1832.

60. Morellini N, Finch PM, Goebel A, Drummond PD. Dermal nerve fibre and mast cell density, and proximity of mast cells to nerve fibres in the skin of patients with complex regional pain syndrome. Pain 2018; 159(10): 2021-2029.

61. Drummond PD, Morellini N, Finch PM, Birklein F, Knudsen LF. Complex regional pain syndrome: intradermal injection of phenylephrine evokes pain and hyperalgesia in a subgroup of patients with upregulated α1-adrenoceptors on dermal nerves. Pain 2018; 159(11): 2296-2305.

62. Finch P, Price L, Drummond P. High frequency (10 kHz) electrical stimulation of peripheral nerves for treating chronic pain: a double-blind trial of presence versus absence of stimulation. Neuromodulation 2019; 22(5): 529-536.

63. Drummond PD, Morellini N, Visser E, Finch PM. Parallels between lumbosacral radiculopathy and complex regional pain syndrome: α1-adrenoceptor upregulation, reduced dermal nerve fibre density and hemi-sensory disturbances in post-surgical sciatica. Pain 2019; 160(8): 1891-1900.

64. Drummond PD, Morellini N, Visser E, Finch PM. Expression of cutaneous beta-2 adrenoceptors is similar in patients with complex regional pain syndrome and pain-free controls. Pain Med 2020;21(6):199-207.

65. Finch P, Drummond P. High-frequency peripheral nerve stimulation for craniofacial pain. Prog Neurol Surg 2020;35:1-11.

66. Vickery, AW, Finch, PM. Cannabis: Are there any benefits? Intern Med J 2020; 50: 1326-1332.

66. Drummond PD, Vo L, Finch PM. The source of hemisensory disturbances in complex regional pain syndrome. Clin J Pain 2021; 37(2):79-85.

67. Drummond PD, Finch PM. Photophobia in complex regional pain syndrome: visual discomfort is greater on the affected than unaffected side. Pain 2021 Apr 1;162(4):1233-1240.

68. Drummond PD, Finch PM. Pupillary reflexes in complex regional pain syndrome: asymmetry to arousal stimuli suggests an ipsilateral locus coeruleus deficit. J Pain. 2021;23(1):131-140.

69. Drummond PD, Finch PM. Co-morbidity between trigeminal autonomic cephalalgias and complex regional pain syndrome: Two case reports. Cephalalgia 2022;42(7):674-679.

70. Wijaya LK, Morici MV, Stumbles PA, Finch PM, Drummond PD. Stimulation of a1-adrenoceptors may intensify cutaneous inflammation in complex regional pain syndrome. Pain 2023;164(4):771-781.

71. Drummond PD, Finch PM. Auditory disturbances in patients with complex regional pain syndrome. Pain 2023;164(4):804-810.

72. Finch PM, Sohrabi HR, Drummond PD. Olfaction in complex regional pain syndrome. Pain Med 2023; 24(6):618-624.

73. Wijaya LK, Stumbles PA, Finch PM, Drummond PD. Inflammation induces α1-adrenoceptor expression in peripheral blood mononuclear cells of patients with complex regional pain syndrome. Brain, Behavior, and Immunity 2024;115:201-8.

74. Drummond PD, Rossen-Abercromby M, Quartermaine A, Ye D, Barbero M, Finch PM. Spatial distribution of pain in complex regional pain syndrome. Pain 2025:166(10):2342-2354.

75. Finch PM, Price LM, Price TJF, Kent MJ, Drummond PD. Opioid reduction in patients with chronic non-cancer pain undergoing treatment with medicinal cannabis. Pain Manag 2025;15(10):703-711.

76 Drummond PD, Finch PM. Complex regional pain syndrome and migraine: clinical relationships and possible common aetiology. *Cephalalgia* Cephalalgia 2025, Vol. 45(12) 1–14

Editors Choice: Cephalalgia

77 Therapeutic dissociation of CGRP-targeted treatments in migraine and complex regional pain syndrome: Authors' reply accepted 12-Feb-2026. In Press

Posters

1. Phillips JK, Dawson LF, Gibbs GF, Nordin R, CW Vaughan, Mitchell VA, Finch PM, Drummond PD. Histological basis for sympathetic-sensory coupling in skin. Proceedings of the Australian Neuroscience Society 2008; 18: 106

Book Chapters

1. Finch P and Taylor J (1996). Functional Anatomy of the Spine in Waldman S D and Winnie A P (Eds.) Interventional Pain Management 1st Edition. Philadelphia: W B Saunders.

2. Finch P and Taylor J (2001). Functional Anatomy of the Spine in Waldman S D and Winnie A P (Eds.) Interventional Pain Management 2nd Edition. Philadelphia: W B Saunders.

3. Finch P (2002). Sympathetic Neurolysis in Raj P (Ed.) Textbook of Regional Anesthesia. St Louis: Churchill Livingstone.

4. Finch P (2010). The Sympathetic Chain: Efficacy of Sympathetic Blockade and Sympathectomy in Tsui S-L (Ed.). Pain Medicine Multidisciplinary Approach. Hong Kong: HKU Press.

5. Finch P. Girişimsel yöntemlerde iğnenin doğru kullanilmasi ve hedefe ulaşmadaki teknikler [Steering the needle: the importance of technique in pain medicine]. In: Erdine S, editor. Algolojide girişimsel yöntemler [Pain management interventional methods]. Istanbul: Nobel Tip Kitabevleri; 2012. p. 537-544.

GENERAL:

Meeting Convener
"Spinal Pain: Precision Diagnosis and Treatment". Official satellite meeting of the 6th World Congress on Pain, Perth, April 8-10, 1990.

Invited Faculty
"Diagnostic Nerve Blocks" 1994, Australian Pain Society, Brisbane.

"Radiofrequency Techniques" 1995, Merida Clinic, Cleveland, Ohio, USA.

First Advanced Interventional Pain Conference & Cadaver Workshop, September 1996, Budapest, Hungary.

Fourteenth Annual Pain Symposium, June 1997, Lubbock, Texas, USA.

Second Annual Advanced Interventional Pain Conference & Cadaver Workshop, September 1997, Budapest, Hungary.

Fifteenth Annual Pain Symposium, June 1998, Lubbock, Texas, USA.

Third Annual Advanced Interventional Pain Conference & Cadaver Workshop, September 1998, Budapest, Hungary.

Spinal Whiplash Symposium, September 1998, Jonkopping, Sweden.

Pain Management – Towards 2000, November 1998, Eilat, Israel.

Pain Intervention – Interest Group of the UK Pain Society, March 1999, London, UK.

Visiting Professor – Oregon Health Sciences University, March 1999, Portland, Oregon, USA.

Australian Pain Society, April 1999, Perth.

Sixteenth Annual Pain Symposium, June 1999, Lubbock, Texas, USA.

Fourth Annual Advanced Interventional Pain Conference and Cadaver Workshop, September 1999, Budapest, Hungary.

Fifth Annual Advanced Interventional Pain Conference and Cadaver Workshop, September 2000, Budapest, Hungary.

Seventeenth Annual Pain Symposium, June 2000, Lubbock, Texas, USA.

Eighteenth Annual Pain Symposium, June 2001, Lubbock Texas, USA.

Sixth Annual Advanced Interventional Pain Conference and Cadaver Workshop, September 2001, Budapest, Hungary.

Nineteenth Annual Pain Symposium, June 2002, Lubbock, Texas, USA.

Seventh Annual Advanced Interventional Pain Conference and Cadaver Workshop, September 2002, Budapest, Hungary.

ISIS Meeting, May 2003, Florida, USA.

Twentieth Annual Pain Symposium, June 2003, Lubbock, Texas, USA.

Eighth Annual Advanced Interventional Pain Conference and Cadaver Workshop, August 2003, Budapest, Hungary.

Notwil Conference, October 2003, Switzerland.

AOSRA Conference, November 2003, Bangkok, Thailand.

Twenty-First Annual Pain Symposium, June 2004, Lubbock, Texas, USA.

Ninth Annual Advanced Interventional Pain Conference and Cadaver Workshop, September 2004, Budapest, Hungary.

Third World Congress World Institute of Pain September 2004, Barcelona, Spain.

Indian Pain Society, January 2005, Poona, India.

Interventional Therapy for Acute & Chronic Pain, January 2005, Nottwill, Switzerland.

CASP Meeting, April 2005, Shenzhen, China.

International Forum of Pain Medicine, May 2005, Sofia, Bulgaria.

EULAR Conference June 2005, Austria, Vienna.

Twenty-Second Annual Pain Symposium, June 2005, Lubbock, Texas, USA.

Tenth Annual Advanced Interventional Pain Conference and Cadaver Workshop, September 2005, Budapest, Hungary.

Chinese Pain Society Annual Meeting, December 2005, Shanghai, China.

Kwong Wah Hospital, Visiting Professor Lecture, January 2006, Hong Kong.

World Institute of Pain, Examiner for FIPP, March 2006, Memphis, Tennessee, USA.

Spine Society of Australia Conference, April 2006, Wentworth, Sydney, Australia.

Eleventh Hong Kong Medical Forum, June 2006, Hong Kong.

Twenty-Third Annual Pain Symposium, June 2006, Lubbock, Texas, USA.

International Neurosurgery Forum of Shandong, July 2006, Quingdao, China.

Eleventh Annual Advance International Pain Conference, Cadaver Workshop & FIPP

Examination Preparation Course, September 2006, Budapest, Hungary.

Cadaver Workshop, December 2006, Bangkok, Thailand.

Beijing Pain Conference, March 2007, Beijing, China

Spine Society of Australia Conference, April 2007, Hobart, Tasmania, Australia.

Symposium on Evidence in Interventional Pain Management, June 2007, London.

World Institute of Pain Conference, September 2007, Budapest, Hungary.

Minimal Invasive Pain Therapy Symposium, January 2008, Nottwil, Switzerland.

World Institute of Pain, Examiner for FIPP, March 2008, Memphis, Tennessee, USA.

International Pain Clinic Congress World Society of Pain Clinicians, May/June 2008, Seoul, Korea

Twenty-Fifth Annual Pain Symposium, June 2008, Lubbock, Texas, USA.

World Institute of Pain Conference, September 2008, Budapest, Hungary.

Third Northern Symposium of Pain Management, January 2009, Chiangmai, Thailand.

Eleventh Annual Pain Management Symposium, Cleveland Clinic, February 2009, Fort Lauderdale, Florida, USA.

World Institute of Pain, Examiner for FIPP, March 2009, New York, USA.

World Institute of Pain Fourth International Symposium on Interventional Pain Procedures, June 2009, London, UK.

World Institute of Pain Eighth UK Hans-On Cadaver Workshop on Interventional Pain Procedures, June 2009, London, UK.

World Institute of Pain Fourteenth Annual Advanced Interventional Pain Conference and Practical Workshop and Interventional Techniques Review Course, August/September 2009, Budapest, Hungary.

Annual Scientific Meeting in Anaesthesiology, October 2009, Hong Kong.

Second Joint Swiss/United Kingdom Winter Pain Meeting, February 2010, Zurich, Switzerland.

Royal Australasian College of Surgeons Annual Scientific Congress, Presentations on 'Intrathecal Pumps' and 'Medication Options for Complex Regional Pain Syndrome', May 2010, Perth, Western Australia.

Biennial Scientific Meeting 2010 of the Pain Association of Singapore, Expressions of Pain, July 2010, Singapore.

International Symposium - Invasive Procedures in Motion, January 2011, Nottwil/Lucerne, Switzerland.

WIP and WIP Foundation Board and Committee Meetings, June 2011, Maastricht, Netherlands.

International Conference on Interventional Pain Management & FIPP Review Course with Cadaveric Workshop, September 2011, Chennai, India.

The Sixth World Congress - World Institute of Pain, February 2012, Miami, Florida, USA

Fifteenth World Congress of Pain Clinicians, June 2012, Granada, Spain.

First China Forum of Pain Medicine, September 2012, Beijing, China.

Nevro Masterclass, March 2013, Canberra, Australia.

Pain Society of Australia, 24th Annual Scientific Meeting, April 2013, Perth, Australia.

WIP and WIP Foundation Board and Committee Meetings, June 2013, Maastricht, Netherlands.

WIPF Symposium, November 2013, Kolkata, India.

Malaysian Pain Conference, December 2013, Malaysia.

Second Asian Congress on Pain, March 2014, Taipei, Taiwan.

Seventh World Congress – World Institute of Pain, May 2014, Maastricht, The Netherlands.

Sixtieth Annual Meeting of the Korean Pain Society, May 2015, Seoul, Korea.

World Institute of Pain Benelux Sixth International Pain Medicine Symposium, June 2015, Maastricht, The Netherlands

Neuromodulation Society of Australia and New Zealand 11th Annual Scientific Meeting, March 2016, Perth, Australia.

Eighth World Congress of the World Institute of Pain, May 2016, New York, USA.

First International Congress on Spinal Pain in Korea, May 2016, Gwangju, Korea.

Invited faculty, WIP meeting in Taiwan 2019

Reviewer of Papers Submitted for Publication
Journal of Pain Research
Pain Management
Pain Practice
Pain Research and Management

Society Membership
Various posters and presentations given over 20 years at society meetings.

1. Spine Society of Australia
2. Australian Medical Association
3. International Neuromodulation Society
4. Board of Neuromodulation of Australia and New Zealand-retired

Publications supported by Australia and New Zealand College of Anaesthesia (ANZCA) grants

2006: Mechanism and treatment of allodynia in complex regional pain syndrome
Investigators: PM Finch, PD Drummond, JK Phillips

1. Gibbs GF, Drummond PD, Finch PM, Phillips JK. Unravelling the pathophysiology of complex regional pain syndrome: focus on sympathetically maintained pain. *Clinical and Experimental Pharmacology and Physiology* 2008;35:717-724.

2. Finch PM, Knudsen L, Drummond PD. Reduction of allodynia in patients with complex regional pain syndrome: a double-blind placebo-controlled trial of topical ketamine. *Pain* 2009;146:18-25.

2010: Adrenergic receptor involvement in an animal model of complex regional pain syndrome type I
Investigators: PM Finch, PD Drummond, JK Phillips

1. Dawson LF, Phillips JK, Finch PM, Inglis JJ, Drummond PD. Expression of α_1-adrenoceptors on peripheral nociceptive neurons. *Neuroscience* 2011;175:300-314.

2011: Mechanisms of adrenergic hyperalgesia in the partial sciatic nerve ligation model of neuropathic pain
Investigators: PM Finch, PD Drummond, JJ Inglis

1. Drummond ES, Dawson LF, Finch PM, Bennett GJ, Drummond PD. Increased expression of cutaneous α_1-adrenoceptors after chronic constriction injury in rats. *Journal of Pain* 2014;15:188-196.
2. Drummond ES, Dawson LF, Finch PM, Li W, Guo TZ, Kingery W, Drummond PD. Increased bilateral expression of α_1-adrenoceptors on peripheral nerves, blood vessels and keratinocytes does not account for pain or neuroinflammatory changes after distal tibia fracture in rats. *Neuroscience* 2014;281:99-109.

2012: Investigating the adrenergic component of neuropathic pain
Investigators: PM Finch, PD Drummond

1. Finch PM, Drummond ES, Dawson LF, Phillips JK, Drummond PD. Up-regulation of cutaneous α_1-adrenoceptors in complex regional pain syndrome type I. *Pain Medicine* 2014;15:1945-1956.
2. Drummond PD, Drummond ES, Dawson LF, Mitchell V, Finch PM, Vaughan CW, Phillips JK. Up-regulation of α_1-adrenoceptors on cutaneous nerve fibres after partial sciatic nerve ligation and in complex regional pain syndrome type II. *Pain* 2014;155:606-616.
3. Birklein F, Drummond PD, Li W, Schlereth T, Albrecht N, Finch PM, Dawson L, Clark JD, Kingery WS. Activation of cutaneous immune responses in complex regional pain syndrome. *Journal of Pain* 2014;15:485-495.

2015: Clarifying the molecular mechanism of sympathetically maintained pain
Investigators: PM Finch, PD Drummond

1. Morellini N, Finch PM, Goebel A, Drummond PD. Dermal nerve fibre and mast cell density, and proximity of mast cells to nerve fibres in the skin of patients with complex regional pain syndrome. *Pain* 2018;159:2021-2029.

2016: Central sensitization and auditory disturbances in complex regional pain syndrome
Investigators: PM Finch, PD Drummond, L Vo

1. Drummond PD, Finch PM, Birklein F, Stanton-Hicks M. Knudsen LF. Hemi-sensory disturbances in patients with complex regional pain syndrome. *Pain* 2018;159:1824-1832.
2. Drummond PD, Vo L, Finch PM. The source of hemisensory disturbances in complex regional pain syndrome. *Clinical Journal of Pain* 2021;37:79-85.

2017: Sympathetically maintained pain in complex regional pain syndrome
Investigators: E Visser, PM Finch, PD Drummond

1. Drummond PD, Morellini N, Finch PM, Birklein F, Knudsen LF. Complex regional pain syndrome: Intradermal injection of phenylephrine evokes pain and hyperalgesia in a subgroup of patients with upregulated α_1-adrenoceptors on dermal nerves. *Pain* 2018;159:2296-2305.
2. Drummond PD, Morellini N, Visser E, Finch PM. Parallels between lumbosacral radiculopathy and complex regional pain syndrome: α_1-adrenoceptor upregulation, reduced dermal nerve fibre density and hemi-sensory disturbances in post-surgical sciatica. *Pain* 2019;160:1891-1900.

2019: Molecular evidence of chronic inflammation in complex regional pain syndrome
Investigators: PM Finch, PD Drummond

1. Drummond PD, Morellini N, Visser E, Finch PM. Expression of cutaneous beta-2 adrenoceptors is similar in patients with complex regional pain syndrome and pain-free controls. *Pain Medicine* 2020;21:1199-1207.
2. Wijaya LK, Morici MV, Stumbles PA, Finch PM, Drummond PD. Stimulation of α_1-adrenoceptors may intensify cutaneous inflammation in complex regional pain syndrome. *Pain* 2023;164:771-781.
3. Wijaya LK, Stumbles PA, Finch PM, Drummond PD. Inflammation induces α_1-adrenoceptor expression in peripheral blood mononuclear cells of patients with complex regional pain syndrome. *Brain Behavior and Immunity* 2024; 115:201-208

2022: Central nervous system disturbances in complex regional pain syndrome
Investigators: PM Finch, PD Drummond, H Fujiyama, F di Pietro

1. Drummond PD, Finch PM. Auditory disturbances in patients with complex regional pain syndrome. *Pain* 2023;164:804-810.
2. Drummond PD, Finch PM. Complex regional pain syndrome and migraine: clinical relationships and possible common aetiology. *Cephalalgia* Accepted for publication November 2025.
3. Drummond PD, Rossen-Abercromby M, Quartermaine A, Ye D, Barbero M, Finch PM. Spatial distribution of pain in complex regional pain syndrome. *Pain* Accepted for publication March 2025.

2024: Is complex regional pain syndrome associated with structural or functional changes in the locus coeruleus?
Investigators: PM Finch, PD Drummond, S Vos

Current Project at Murdoch University

Research Grants other than ANZCA

2007-2009	NHMRC	Involvement of adrenergic receptors in neuropathic pain Co-investigators: PM Finch, JK Phillips	$330,000
2008	Medtronic Australasia	Adrenergic receptors in complex regional pain syndrome Co-investigators: PM Finch, JK Phillips	$10,000
2010	Medtronic Australasia	Establishing a centre for research on chronic pain and inflammatory diseases Co-investigator: PM Finch	$30,000
2010	St Jude Medical	Altered expression of adrenergic receptors in animal models of complex regional pain syndrome Co-investigator: PM Finch	$16,000
2011	St Jude Medical	Alpha adrenergic receptor subtypes on sensory nerves in conditions of chronic pain Co-investigators: M Connor, JK Phillips (Macquarie University), P Finch, L Dawson (Murdoch University) I McGrath (University of Glasgow, Scotland)	$15,000
2011	Perpetual Trustees	Alpha adrenergic receptor subtypes on sensory nerves in conditions of chronic pain Co-investigators: M Connor, JK Phillips (Macquarie University), P Finch, L Dawson (Murdoch University) I McGrath (University of Glasgow, Scotland)	$50,000
2012-2014	NHMRC	Mechanism and treatment of sympathetically maintained pain Co-investigators: P Finch, F Birklein (Germany), N Harden (USA)	$466,597
2016	RSDSA	A multi-site study of sympathetically maintained pain in complex regional pain syndrome Co-investigators: P Finch, F Birklein, T Schlereth, H	USD $92,621

		Kramer, L Knudsen, P Karlsson, T Jensen, M Stanton-Hicks, J Cheng, J Wu, J Xu, H Amirault	
2017	St Jude Medical	Pharmacological treatment of sensory disturbances and pain in complex regional pain syndrome Investigators: P Finch, P Drummond	$20,000

Research Awards

Russell Cole Memorial ANZCA Research Award 2016: Central sensitisation and auditory disturbances in complex regional pain syndrome – Philip Finch and Peter Drummond

Clinical Equipment Trials Completed

1. A new one-piece intrathecal catheter (Medtronic). Completed 1998. A multicentre study.

2. Evaluation of the neurometer (Neurotron, Inc) – a sensory testing device. Completed 1998. A multicentre study.

3. Clinical trial of the Synergy system (Medtronic) of dual channel epidural stimulators.

Equipment Development

1. Development of a conscious state monitor up to a prototype stage. EEG analysed by fast Fourier transform analysis and presented as a colour contour plot.(Never commercialised)

2. Racz-Finch family of curved radiofrequency electrodes (Radionics, USA).

3. Disctrode: Finch-Kamson intradiscal radiofrequency electrode (Radionics, USA).

4. Ultrasound friendly radiofrequency needles (Epimed International, USA)

China Pain Clinic

In January 2006, in association with Dr Ni Zhongge, I opened a clinic for the treatment of chronic pain in Shenyang, China. Dr Ni is a neurosurgeon. The aim of this clinic is to promote the use of the scientific method and evidence-based treatment in the management of pain syndromes. It is hoped that by the establishment of a centre of excellence in Shenyang, China that the teaching of pain management can be promoted in China. A small adjunct Traditional Chinese Medicine Clinic has also been recently opened.

Honorary Professor

Honorary Professor, Shenyang Medical Centre, People's Republic of China for my work in the chronic pain field.

Research

Adjunct Professor, School of Psychology and Exercise Science at Murdoch University, Murdoch University

Although my involvement in full time private practice has limited my capacity to be more actively involved in research, I have consistently published 1-3 papers per year over the past 20 years. Throughout this time, I have had a very productive partnership with Professor Drummond and other members of staff at Murdoch University. This was recognised in 2007 when I was appointed Adjunct Professor in the School of Psychology.

In 2010 Professor Drummond and I established the Centre for Research on Chronic Pain and Inflammatory diseases at Murdoch University. My role is to supervise research students, provide clinical guidance and expertise, and to assist with recruitment of patients. I have also been actively involved in promoting the Research Centre to the medical community and have been successful in raising support for the Centre from various sources.

Throughout my career I have had a particular interest in translating experimental findings into clinical practice, and in training the next generation of researchers and clinicians. Over the past few years, I co-supervised Dr Lone Knudsen's PhD thesis (awarded in 2009) and Ms Jeanette Lynch's Master of Applied Psychology thesis. Several papers based on Lone's work have already been published and additional papers have been submitted for publication and are in preparation. I have also taken on a mentoring role for our postdoctoral fellow (AI Linda Dawson), particularly with regard to the presentation and interpretation of immunohistochemical data obtained in our current projects.

Adjunct Professor, School of Medicine, Fremantle Campus at the University of Notre Dame Australia.

Social

Built a Glastar experimental aircraft commencing April 1998, first flight December 2000, now completed 1400 hours in the air. Current president of Chapter 24, Sport Aircraft Association Australia

Horticultural

Ran a small commercial avocado grove in Southwestern Australia-now ceased farming for commercial reasons.

US006146380A

United States Patent [19]

Racz et al.

[11] Patent Number: 6,146,380

[45] Date of Patent: Nov. 14, 2000

[54] **BENT TIP ELECTRICAL SURGICAL PROBE**

[75] Inventors: **Gabor B. Racz**, Lubbock, Tex.; **Philip Finch**, Parkerville, Australia

[73] Assignee: **Radionics, Inc.**, Burlington, Mass.

[21] Appl. No.: **09/004,992**

[22] Filed: **Jan. 9, 1998**

[51] **Int. Cl.**[7] **A61B 18/14**

[52] **U.S. Cl.** **606/41**; 607/99; 607/105; 607/113; 607/116

[58] **Field of Search** 607/116, 117, 607/99, 98, 105, 113; 606/41, 48–50

[56] **References Cited**

U.S. PATENT DOCUMENTS

3,828,780	8/1974	Morrison, Jr.	606/49
3,943,932	3/1976	Woo	607/116
4,301,802	11/1981	Poler	606/48
4,411,266	10/1983	Cosman	606/49
5,433,739	7/1995	Sluijter et al.	607/99
5,605,539	2/1995	Buelna et al.	606/49
5,807,395	9/1998	Mulier et al.	606/41

FOREIGN PATENT DOCUMENTS

1391626	4/1988	U.S.S.R.	606/41

Primary Examiner—Lee Cohen

[57] **ABSTRACT**

A medical needle or cannula for stimulation or ablation includes a rigid bent tip for simplified placement at target sites within a patient's anatomy. The curved tip or shaft is used to steer the device within the patient's body and to avoid critical anatomical structures. The device is partially insulated and has a tip that is at least partially electrically exposed; a connection to an external signal generator provides electrical stimulation or high-frequency heating of the patient's tissue proximal to the exposed tip. The device includes a longitudinal passage to facilitate the injection of fluids or the insertion of instruments through the cannula or needle.

12 Claims, 2 Drawing Sheets

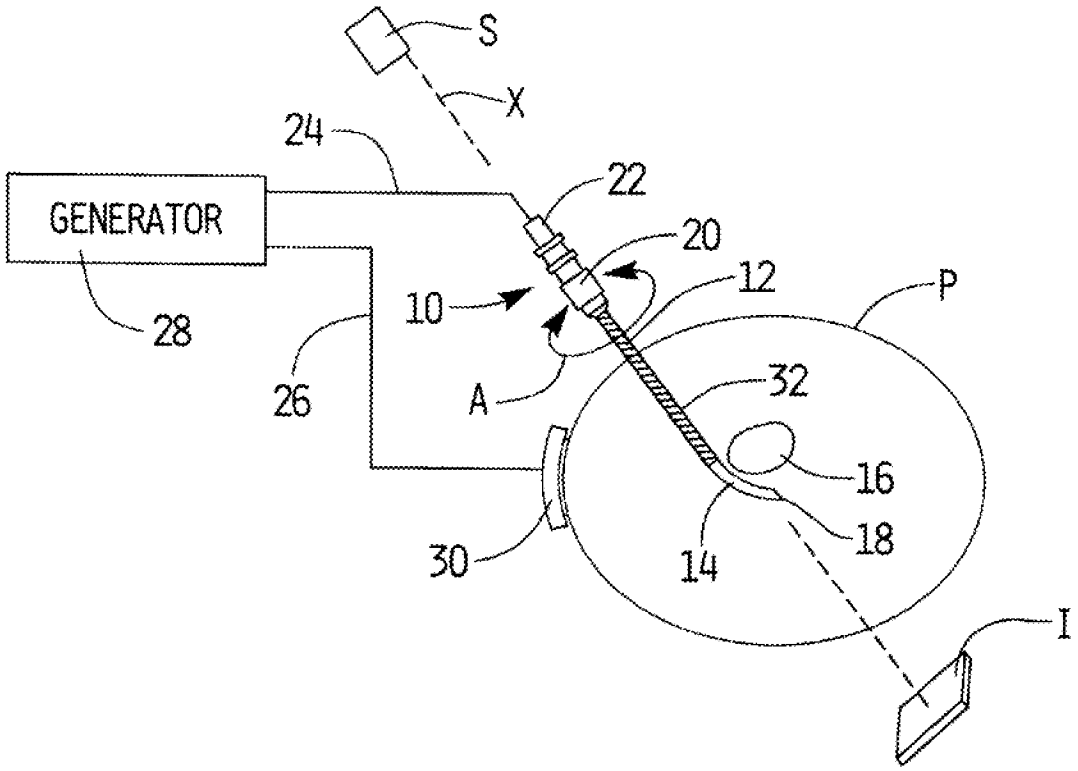

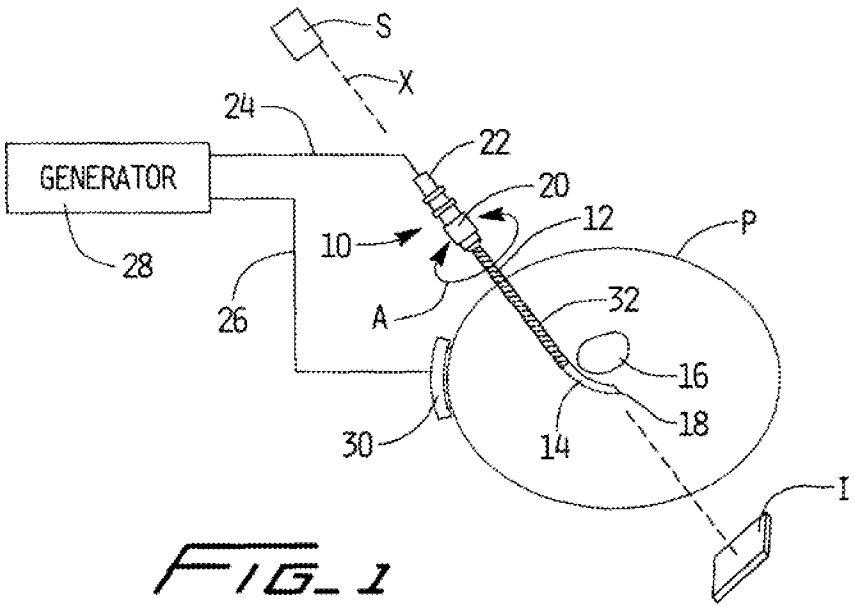

FIG_1

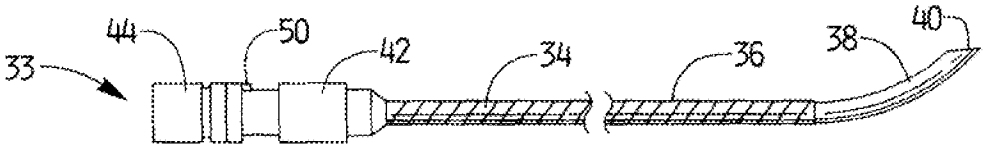

FIG_2A

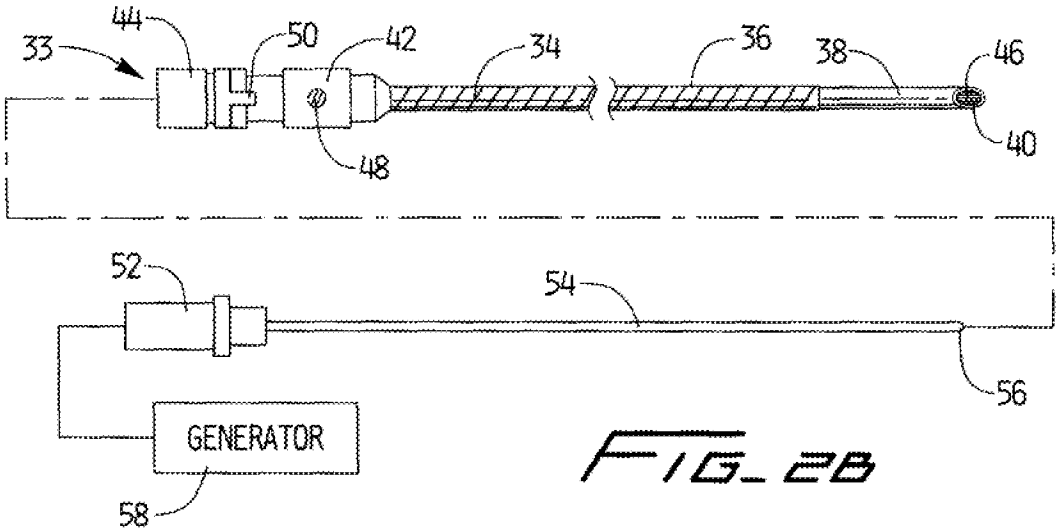

FIG_2B

FIG. 3A

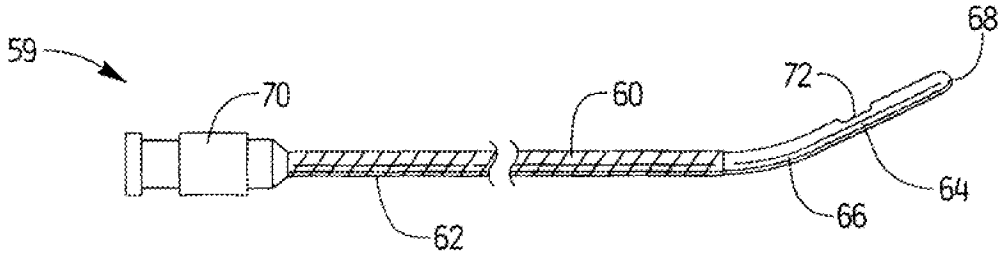

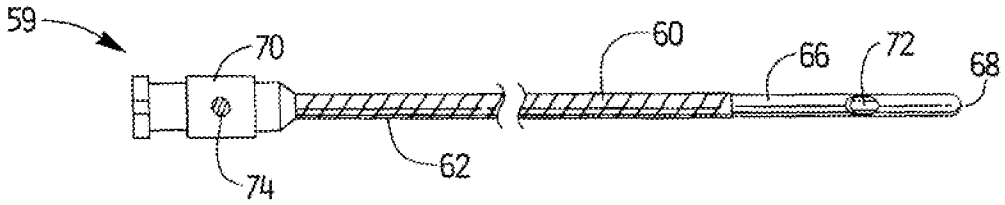

FIG. 3B

BENT TIP ELECTRICAL SURGICAL PROBE

FIELD OF THE INVENTION

The invention relates to a system for pain relief employing electrical stimulation or high frequency delivery techniques, and more particularly to an apparatus for pain relief that delivers electrical stimulation pulses or high-frequency signals to the vicinity of a neural structure via an electrical needle or cannula.

BACKGROUND OF THE INVENTION

It has been found that relief from localized pain can be achieved in many patients through the delivery of electrical stimulation or high-frequency signals to a target region. To accomplish this, stimulation or radio-frequency electrodes are placed within a patient's body. Those electrodes are connected to a generator of stimulation electrical signals or high-frequency electrical signals to deliver energy to tissue and neural structures. This can result in anesthesia, temporary relief, or long-term relief from pain. Examples of electrodes, signal generators, and methods usable for this purpose can be found in the product line of Radionics, Inc., of Burlington, Massachusetts.

A wide variety of electrode geometries can be used in such applications. For example, an electrode unit having an insulated shaft and an exposed electrical tip, which can be pointed, blunt and rounded, or open, are suitable for various procedures. Pointed tips are self-penetrating, while rounded tips can be used in soft tissue such as the brain. Open tips can be used to deliver a liquid or other diagnostic or therapeutic agent, or a stylet or an endoscopic tool, to the target while simultaneously performing electrical treatment. Radio-frequency electrodes are commonly used; these typically have an insulated straight tubular metal shaft with an electrically exposed tip. Connection at the hub or proximal end of the electrode is made to an external signal generator capable of generating stimulation or high-frequency energy. In the course of treatment, the electrode is inserted into the patient's tissue, and signals from the signal generator are thereby delivered into the region of the patient's tissue surrounding the tip of the electrode.

The SMK Needle electrodes from Radionics are in some ways representative of electrodes typically used in pain relief procedures. The SMK Needles have plastic hubs and metal shafts that are insulated over most of their length. An exposed tip is a straight extension of the metal tubing shaft of the needle. An obdurating stylet is inserted into the needle during insertion into the patient's tissue. Once it has been inserted, the stylet is withdrawn and the radio-frequency or stimulation probe is inserted. The probe is connected to an external signal generator. Contrast agents or anesthetic fluids can be injected into the tissue near the tip through the hollow needle.

A common use for the Radionics SMK Needle is in the stimulation and denervation of a patient's spine. In this procedure, the SMK Needle electrodes are inserted, while viewed via X-ray or fluoroscope, near the facet joints or other neural structures of the spine. Anesthetic or diagnostic localization agents can be injected through the needles, and stimulation testing can then be performed. Radio-frequency heat ablation of a portion of the patient's tissue near the tip of a needle is routinely performed. Hence, proper placement of the needle tip in the complicated structure of a patient's spine requires great skill by the treating clinician. One limitation of the straight electrodes typically used in such procedures is that the needles may need to be withdrawn and

re-inserted multiple times to achieve the proper target region for the needle tip.

The need to access other complex structures, such as lumbar-sacral discs, particularly where there is a high pelvic brim in males and in those individuals having extreme degenerative narrowing, makes needle placement even more difficult. The nerve root in the lower spine may be accidentally impaled; this presents a serious medical risk to the patient. Again, the use of straight, self-penetrating needles is limited somewhat in that the tip is collinear with the needle shaft, so navigating the tip to avoid critical structures requires redirection of the shaft and repeated manipulation. It would be desirable to facilitate such redirection in ways unachievable by a straight needle, reducing the need to withdraw and reinsert the needles.

Moreover, the straight, exposed tip of a straight needle cannot hug the contour of a curved bony structure such as the superior articular facet, which proximates target nerves. This can present a restriction to target location in some situations.

It is desirable to be able to redirect or steer the tip of the electrode, which for straight needles can be tedious and difficult. It is further desirable to be able to control the tip of a needle by mere shaft rotation or other means of manipulation.

Stimulation and high frequency electrodes having expandable and flexible curved tips are known. Examples of such electrodes are the TEW Electrode Kit and the ZHK Electrode Kit, both manufactured by Radionics. Those electrodes both have flexible, curved tips, which extend from the straight shaft of an enclosing cannula to extend off-axis in an arc. This is useful in certain neural regions such as the trigeminal ganglion or the pituitary gland, or any area where the target region is very soft or fluid filled. Such flexible off-axis electrodes have a limitation that there tips cannot penetrate tough tissue or encounter hard bone without being damaged or diverted.

It is observed that neither straight needles nor flexible electrodes have the desired characteristics for use in difficult-to-reach target regions. Accordingly, it would be desirable to have an electrode cannula for stimulation or ablation that avoids the limitations of the art.

SUMMARY OF THE INVENTION

The present invention is directed to a system and method for delivering anesthesia, pain relief, or other treatment involving a firmly curved tip needle electrode. In one example, a needle comprising a metal tubular shaft having insulation over a portion of the shaft further includes an exposed and bent tip portion. This bend can be fabricated into the metal shaft so that it is relatively permanent and robust. The bent needle can then be connected to a signal generator to supply stimulation, high frequency, or pulsed high frequency signals for the purpose of stimulation, heat ablation, or other anesthetic electrical action.

Such a robust bent tip would make possible the re-direction of the position and orientation of the tip near neural structures, bone, or critical structures, without the need to fully withdraw and re-insert the needle. Alteration of the direction of the needle hub presents another advantage. It can be advantageous with a bent tip to follow neural structures, hug bony structures, and avoid certain organs or regions at risk, which can be useful in certain clinical applications.

A further advantage of a permanently bent or curved needle is that its position can be altered to some degree by

merely rotating the needle shaft; this is not the case with straight needles. Accordingly, some position adjustments can be performed with fewer manipulations than a straight needle would require. Moreover, a bent or curved needle having a pointed tip mounted at the distal end of a relatively rigid tubular or solid shaft enables self-penetration of tough tissue near hard, bony structures. This kind of manipulation is not generally possible with side outlet-bearing electrodes such as Radionics' TEW and ZHK kits because of the fragility and flexibility of their tips.

The advancement and manipulation of a bent needle or cannula can be performed under X-ray or other guidance by the clinician to place the bent tip in its target position. This provides an added advantage over a straight needle or cannula.

These features and advantages as well as others will be apparent in the detailed description that follows.

BRIEF DESCRIPTION OF THE DRAWINGS

In the drawings, which constitute a part of this specification, embodiments are exhibited in various forms, and are set forth specifically:

FIG. 1 is a schematic diagram of a bent tip electrical needle connected to an electrical signal generator, in accordance with the present invention;

FIG. 2 includes FIG. 2A and FIG. 2B, which show schematic side elevation and orthogonal view representations of a bent tip needle with a stylet, an electrical probe, and a signal generator; and

FIG. 3 includes FIG. 3A and FIG. 3B, which show a side elevation view and an orthogonal view, schematically rendered, of a blunt bent-tipped needle with index markings and an injection port.

DETAILED DESCRIPTION OF THE INVENTION

Referring initially to FIG. 1, a radio-frequency electrode cannula **10** having a shaft **12** is shown inserted into a portion P of a patient's body. The shaft **12** of the electrode cannula **10** has a rigid, permanent, off-axis bend at a distal tip **14**. The cannula **10** can be inserted directly through the skin of the body portion P to locate the tip **14** in a target position within the body. For illustrative purposes, an internal anatomical structure **16** is shown, and the curved tip **14** is directed around the anatomical structure **16**. This can be accomplished by manipulation of the shaft **12** upon insertion, making use of an off-axis, rigid, curved, self-penetrating point **18** defined by the tip **14**. The shaft **12** can be axially rotated, as illustrated in FIG. 1 by an arrow A. The tip **14** will accordingly alter its azimuthal orientation within the body portion P with respect to the fixed position of the shaft **12**. Therefore, for a given direction of insertion, the curvature of the tip **14** permits a variety of tip positions to be reached. In this way, by a process of inserting the electrode cannula **10** longitudinally and rotating it azimuthally according to the arrow A, the tip **14** can be steered or directed in accordance with the operating clinician's needs and actions.

The electrode cannula **10** further comprises a hub **20**. The hub **20** is capable of accommodating an electrical probe **22**, which includes a segment that is inserted into and received by the shaft **12** of the cannula **10**. This physical relationship between the probe **22** and the shaft **12** facilitates electrical contact between the two elements.

An electrical signal is transmitted to a target region within the body portion P by way of a pair of electrical connections **24** and **26**. A first electrical connection **24** couples the cannula **10** to an external signal generator **28** by way of the hub **20** and the probe **22**. A second electrical connection **26** connects the external signal generator **28** to a reference electrode **30** in contact with the patient's body portion P. As discussed above, the signal generator **28** can be a source of electrical stimulation, pulsed high-frequency stimulation signals, high frequency signals, pulsed radio-frequency output, or other electrical waveforms. The two electrical connections **24** and **26**, in cooperation with the cannula **10** and the reference electrode **30**, form a complete electrical circuit permitting current flow. For background information on how this has been accomplished in past systems, see E. R. Cosman and B. J. Cosman, "Methods of Making Nervous System Lesions," in R. H. Wilkins and S. S. Rengachary, eds., *Neurosurgery*, New York: McGraw-Hill (1984), v. III, pp. 2490–98.

Generally, by the connections set forth above, an output of the signal generator **28** is conveyed via the first electrical connection **24** to the probe **22**, the cannula **10**, and its tip **14**. This causes electrical stimulation or high-frequency heating of tissue near the exposed electrical tip **14**. This practice is well known in the arts of stimulation and ablation.

However, in accordance with an embodiment of the invention, as shown in the illustration of FIG. 1, the tip **14** of the cannula **10** has a bent configuration, and the straight portion **32** of the shaft **12** is at least in part electrically insulated, as indicated by the hatched area of FIG. 1. The cannula **10** is inserted into the patient's body portion P under X-ray guidance. One common practice is to locate an X-ray source S along a desired axis for needle placement. An image detector I disposed on an opposite side of the body portion P then receives those X-rays transmitted along an axis X of the cannula **10**, thereby permitting verification of the proper location and orientation of the tip **14** of the cannula **10**. When bony anatomy corresponds to the appropriate direction of insertion by the clinician, the cannula **10** can be inserted into the patient's body portion P along that direction. See E. R. Cosman and B. J. Cosman, "Methods of Making Nervous System Lesions," in R. H. Wilkins and S. S. Rengachary, eds., *Neurosurgery*, New York: McGraw-Hill (1984), v. III, pp. 2490–98. This is known as the "needle view" method of needle placement.

Commonly, a C-arm fluoroscopic X-ray machine includes the source S and the image detector I. When the cannula **10** has been moved into a longitudinal position near the target, the angular orientation of the tip **14** can be manipulated into one of many possible rotation angles, as indicated by the arrow A. As an illustration, the curved tip **14** can be steered around the anatomical structure **16**. The surface of the exposed tip **14** can be positioned to "hug" or otherwise approach the contour of the anatomical structure **16**. The structure **16** may be a bony structure that has nerves running near its surface, and the clinician may desire to modify or coagulate those nerves by electrical signals sent from the tip **14** by the signal generator **28**. This procedure can be more effective when performed with the rigid bent tip **14** of the invention than with a traditional straight or flexible tip.

FIG. 2 shows another embodiment of the present invention. By way of a further explanation of a specific embodiment, FIG. 2 illustrates various additional features of a curved or bent-tipped electrical needle. In an illustrative embodiment, the shaft **34** comprises a hollow metal tube with an insulated portion **36** illustrated by hatched lines, as shown in FIG. 1. The distal curved tip portion **38** is an extension of the metal tube; it defines a permanent or semi-permanent curve that has an at least partially uninsu-

iated surface portion. In the embodiment illustrated in FIG. 2, the bend is approximately curvilinear and defined by a radial arc. The tip portion **38** of the shaft **34** has a distal pointed end **40**, which as described above can be useful in penetrating tough tissue. A hub **42** can be metal, or alternatively plastic when radiotranslucency is desired.

The embodiment set forth in FIG. 2A is shown with a stylet inserted. Though most of the stylet is not visible, because it is obscured by the shaft **34**, the hub **44** of the stylet is visible at the proximal end of the device. Traditional needle sets that include insulated metal shafts with matching stylets are common in medical practice. See, for example, the SMK needles and cannulae made by Radionics.

FIG. 2B is another view of the needle illustrated in FIG. 2A, but additional features are visible. The pointed end **40** defines an opening **46** that is capable, as discussed above, of dispensing diagnostic or therapeutic liquids, or of allowing a stylet or endoscopic instrument to pass. Also shown is an index dot **48** on the hub which indicates the orientation of the bent tip **38**. In a preferred embodiment, the index dot **48** is located at the same radial position on the shaft **34** as the bent tip **38** and pointed end **40**. An index notch **50**, which indexes the stylet and its hub **44** with respect to the shaft **34** and the orientation of the tip **14**, is further provided. Index notches such as notch **50** are commonly used in needle and stylet sets. An electrical probe **52** is receivable by the shaft **34** when the stylet is removed; it has a probe shaft **54** and a probe tip **56**. In one embodiment of the invention, the probe tip **56** comprises a temperature sensor. See, for example, the SMK needles and cannulae made by Radionics.

The apparatus illustrated in FIGS. 2A and 2B is used as follows. The cannula **33**, with a stylet positioned in the shaft **34**, is inserted into the patient's body portion P (FIG. **1**) either percutaneously or intraoperatively. An X-ray viewer (comprising a source S and an image detector I, as disclosed above) can verify the position and orientation of the bent tip **38** in relation to desired anatomical targets. The stylet is then removed, and the probe **52** is inserted into the shaft **34**. The probe **52** is connected to the signal generator **58**, and the process of electrical stimulation, high-frequency heating, or other electrical application can be made. Electrical signals from the signal generator **58** are communicated to the exposed distal tip **38** by way of contact between the probe shaft **54** and an internal lumen defined by the electrode shaft **34**. If the electrode shaft **34** or cannula is a metal tube and the probe shaft **54** has a metal outer surface, then this can be accomplished simply through physical contact between the probe shaft **54** and the electrode shaft **34**. When the application of therapeutic electrical signals is complete, the probe **52** is withdrawn from the cannula **33**, and the electrode can then be withdrawn from the patient.

FIG. **3** illustrates a further embodiment of the invention, useful in certain other applications. FIGS. **3A** and **3B** represent alternative views of the same embodiment, and as such, reference numerals are shared between the figures. In the cannula **59** illustrated in FIG. **3A**, a shaft **60** has an insulated proximal portion **62** (dashed-line portion) and an uninsulated distal tip section **64**. The shaft **60** defines a permanent, rigid bend portion **66**. The bent portion **66** can be in the insulated proximal portion **62** or in the distal tip section **64** depending on the application; in the illustrated embodiment, the bent portion **66** is part of the distal tip section **64**. The tip section **64** also has a relatively straight portion. The tip section **64** terminates in a blunt or rounded end **68**, which in this embodiment is closed (in contrast to the open ends **18** and **40** of FIGS. **1** and **2**). A hub **70** is a standard hypodermic needle or luer type hub, capable of connection to stylets, electrical probes, syringes, or injection tubes. For example, precision nerve blocks by injection of local anesthetic can be used to confirm the exact position of a target in a diagnostic procedure. This may then be a precursor to other options such as stimulation, radio-frequency heating, pulsed radio-frequency heating, and other procedures discussed herein.

A portal window **72** is shown in the tip portion **64** of the bent needle or cannula **59** of FIG. **3**. In this way, anesthetic, contrast fluids, or other diagnostic or therapeutic agents injected through the hub **70** will be discharged through the window **72** on a lateral portion of the tip **64**. Again, an index marker **74** indicates to the clinician the direction of the bent tip **64**, even when the tip **64** is not directly visible. The index marker **74** is preferably placed on a proximal portion of the cannula **59** or other instrument, and in the illustrated embodiment on the hub **70**. The index marker **74** facilitates steering the bent tip during placement of the cannula in the patient's tissue; it also indicates the direction of the window **72** if fluids are to be injected interstitially.

In one embodiment of the invention, as illustrated in FIG. **3**, the window **72** lies on an inside portion of the curved or bent tip **64**. In this way, the directionality of the injected anesthetic or contrast fluid can be maintained toward the inside of the needle's curve.

Cannulae such as those shown in FIGS. **1**–**3**, particularly the sharp-tipped embodiments illustrated in FIGS. **1** and **2**, must be placed with accuracy and care to avoid injury to critical neural structures. The use of a C-arm X-ray machine, such as that schematically indicated by the source S and image detector I of FIG. **1** is a common imaging method used for insertion and placement. The "needle view" or "beam view" approach used with such an imaging method is in common practice. However, it should be noted that alternate imaging methods for needle or cannula placement can employ CT, MRI, ultrasound, or other techniques.

The advantages and uses of the bent tip electrical cannulae disclosed and claimed herein are apparent in light of the foregoing structural details. Bent tip electrical probes according to the invention provide improved target positioning and safer placement in comparison to traditional treatment modalities. For example, directional steering is facilitated by the curve in the distal end of a spinal needle formed in accordance with the embodiments of FIGS. **1** and **2**. Directional changes during needle insertion can be achieved more easily and less traumatically than would otherwise be possible with a straight-tipped electrode, reducing the need for repeated painful withdrawals and re-insertions.

With a bent-tipped electrode or cannula, rotating the hub while the device is inserted can facilitate steering along a desired insertion path. In this way, a curved or bent-tipped device is steered down the X-ray beam, or perpendicular to the plane of the "needle view," toward the target. The exact skin entry point used to reach a particular target is less important with a bent-tipped device, because a considerable degree of directional control is possible during manipulation of the needle toward the target.

A further advantage of using a small-gauge spinal needle with a curved or bent distal end is that it can be accurately steered into narrow and relatively difficult-to-access portions of a patient's spine. For example, access to the lumbar sacral disc is often difficult with straight needles, especially with the high pelvic brim in males and the extreme degenerative narrowing seen in the bony structures of some patients. In these situations, the use of a straight-tipped needle can increase the risk of L5 nerve root puncture or

injury. With the present invention and a curved-tipped spinal needle, this danger can be avoided and the risks thereby minimized. The bent tip enables a curved approach to the spinal structures and the intravertebral disc. It facilitates the placement of the curved tip in such a way as to hug or conform the outer aspect of the superior articular facet. Moreover, the curved needle of the present invention can be steered around corners, underneath bone grafts, and past spinal fixation devices such as metal plates that may have been implanted on the spine in previous surgical procedures.

Yet another advantage of the system and method of the present invention is that certain other anatomical structures are easier to access with a curved-tipped needle. The lumbar joint, which is a complex curved structure, and the sacroiliac joint, which is partially obscured to a posterior approach by the ilium, are clinical examples in which this advantage is particularly important. Moreover, a fine degree of directional control can be achieved in the context of nerve blocking of spinal roots in these areas and in the nerve root canals. As in all surgical procedures, avoidance of injury to delicate anatomic structures is of primary importance. As discussed above, this can be accomplished by making small adjustments to the direction of the curved needle tip, by altering the azimuthal orientation of the shaft during placement.

Directional control is particularly advantageous in cervical discography, which involves access via an oblique tract that avoids structures such as the esophagus, which is laden with bacteria. The curved tip of a needle according to the invention, placed in this case near the anterior aspect of the intervertebral joint, is then steered by its curvature into the disc. It is even possible to alter the position of the needle in the disc once it has entered the disc itself.

Another important clinical application is lateral entry to the tarricopalatine fossa via the tarricomaxillary fissure, which is partially obstructed by the convex posterior wall of the maxilla. A needle with a terminal or distal curve can be used with advantage to negotiate this difficult entry tract. As with entry to the spinal nerve root canal, small changes in the orientation of the curved distal tip are possible with the present invention, without the need to withdraw and insert the needle multiple times.

Furthermore, the uninsulated portion of the tip **14**, **38**, or **64** (FIGS. **1**–**3**) can be made to lie parallel to neural structures which are on a curvilinear geometry. This configuration is advantageous in those clinical situations in which a radio-frequency heat lesion is to be made on the neural structures, as the uninsulated tip used to generate the lesions conforms better to the target neural structures.

The apparatus of the present invention enables access to multiple tip positions and orientations with fewer needle insertions than with conventional straight-tipped needles. This is achieved by rotating the hub of the cannula **59** (FIG. **3**, for example) to cause the curved tip **64** to access different target volumes. For example, when treating the medial branches of the posterioramus in the cervical region, straight electrodes generally must be placed at several points, since each facet joint is enervated by more than one division of the posterioramus nerve. The curved needle of the present invention reduces the need for multiple placements. Furthermore, one can achieve varied directionality within bony openings such as the foramen ovale for access to the trigeminal ganglion or the spinal foramena for access to spinal root ganglia.

As illustrated in FIGS. **2** and **3**, the curved needles of the invention may have color-coded markers such as the index dot **48** (FIG. **2**) and the index marker **74** (FIG. **3**). These markers indicate the orientation of the curved tip for convenient steering or navigating of the cannula **33** or **59** once it has been placed within the patient's tissue. Color coding at the proximal end of the cannula may be used to indicate the degree of curvature of the tip; it is expected that different curvatures will most advantageously be used in different patients and applications, where the target regions have varied geometries.

Those individuals skilled in the art will recognize that many variations of the electrode geometries depicted in FIGS. **1**–**3** are possible without departing from the invention. Various sized electrodes can be made, from extremely small gauges (e.g., 30 gauge) to much larger sizes (e.g., 10 gauge). Also, the shape and degree of tip curvature may vary widely. The shape of the tip and the extent of insulation vs. exposed electrode can be variable, depending on the application. For example, in FIGS. **1** and **2**, the exposure of the tip **14** or **38** may be only on one side of the cannula to facilitate directional stimulation or ablation; the exposed portion of the tip need not extend all the way around the tip azimuthally.

Moreover, as discussed above, the tip of an electrode constructed according to the invention may have a sharp or a blunt point. A blunt or rounded end can be preferable in some situations, as it will deflect away from a neural structure or blood vessel rather than pierce or injure it. As an example, in stimulation and lesioning applications, a needle tip may need to be placed at the lumbar sympathetic nerve chain, which passes close to the ventral nerves and the lumbar plexies. In this situation, a blunt-tipped needle is safer. Another advantage of a blunt-tipped needle is that it can give a greater degree of "feel" as it passes through various tissue structures and planes. For example, there is a distinct "popping" sensation as a blunt tip passes through the psoas fascia on its way to the sympathetic nerve chain. To insert a blunt-tipped needle, a traditional pointed intravenous cannula can be passed or punctured through the skin to a certain level, with the blunt-tipped needle according to the invention then inserted into the same tract, or even through the cannula. Deeper tissues tend to present less resistance to a blunt-tipped needle than the skin and shallow structures, unless there is substantial scarring, and therefore a blunt-tipped needle can frequently be manipulated very easily.

In some situations, a sharp needle (such as those illustrated in FIGS. **1** and **2**) may be easier to insert or manipulated. For example, in a conscious patient, a pointed needle is inserted more comfortably, whereas for a sedated patient a blunt-tipped needle may be used. In another context, the medial branch of the superior ramus is better approached with a sharp-tipped needle or cannula because major neural structures do not lie in the desired pathway to the lumbar transfer process or the waste of the articulate pillar in the cervical spine. In the pointed-tipped needle shown in FIG. **2**, the aperture or opening **46** for injecting fluids lies at the very distal end of the tip **38**, in contrast to the inside wall used for the window **72** of FIG. **3**.

Various forms and embodiments of the bent tip needle or cannula are provided herein involving various shapes, sizes, forms, and configurations of the cannula and associated stylet, electrical connection, temperature monitoring scheme, signal generator, and other components. However, it should be recognized that other forms of the present invention may become apparent to those skilled in the art. For example, as discussed above, various configurations of tip geometry, bluntness or sharpness, degree of curvature, position of fluid injection ports, and the insulation configu-

ration may be devised. Moreover, the curvature of the tip may be permanently established upon manufacture of the device, or in an alternative embodiment, may be modified by bending a semi-malleable structure at the time of surgery by the clinician. A family of needles or cannulae with different geometries may be created according to the invention.

It should be noted that the terms needle, probe, cannula, etc. as used herein all denote medical and surgical tools that can accommodate the bent tip structure disclosed and claimed. There is no intention to restrict any particular embodiment of the invention to fewer than all of the foregoing implements. Furthermore, certain exemplary clinical applications have been discussed herein as those in which the invention can be successfully employed to the clinician's advantage. However, the invention is not limited to use in such applications, and other medical and surgical procedures would be apparent to a practitioner of ordinary skill.

Thus, while certain exemplary structures and operations have been described, the invention is not so limited, and its scope is to be determined according to the claims set forth below.

What is claimed is:

1. A hollow cannula for insertion into a patient's body and adapted to receive an electrical signal from a signal generator to be transmitted to a target region in the patient's body, comprising:

an electrically insulated elongated shaft defining a longitudinal passage;

a distal tip portion coupled to the elongated shaft, the distal tip portion defining an aperture in communication with the longitudinal passage, the aperture adapted to allow introduction of fluid into the patient's body; and

an electrical connection for receiving the electrical signal, the electrical connection coupled to the distal tip portion;

wherein the distal tip portion includes an uninsulated, rigidly bent portion to facilitate placement of the distal tip portion at the target region, and wherein at least a portion of the distal tip portion comprises an electrically conductive surface that defines a treatment area.

2. The cannula of claim **1**, further comprising a hub mounted at a proximal end of the shaft remote from the distal tip portion, wherein the hub includes a marker to indicate the orientation of the bent portion when the cannula is inserted into the patient's body.

3. The cannula of claim **1**, wherein the distal tip portion defines a sharp end to facilitate insertion into the patient's body.

4. The cannula of claim **1**, wherein the distal tip portion defines a blunt end.

5. The cannula of claim **4**, wherein the blunt end is closed to fluid flow.

6. The cannula of claim **5**, wherein the longitudinal passage is adapted to pass a fluid flow, and wherein the distal tip portion defines a radial window adapted to allow fluid passage for delivery to the patient's body.

7. The cannula of claim **1**, wherein the electrical connection comprises a probe adapted to be received by the shaft.

8. The cannula of claim **1**, wherein the elongated shaft comprises a metal tube.

9. The cannula of claim **1** where the rigidly bent portion is curvilinear.

10. The cannula of claim **1** where the rigidly bent portion is defined by a radial arc.

11. A hollow cannula for insertion into a patient's body and adapted to receive an electrical signal from a signal generator to be transmitted to a target region in the patient's body, comprising:

an electrically insulated elongated shaft defining a longitudinal passage;

a distal tip portion coupled to the elongated shaft, the distal tip portion defining an aperture in communication with the longitudinal passage, the aperture adapted to allow introduction of fluid into the patient's body; and

means for receiving the electrical signal, the means coupled to the distal tip portion;

wherein the distal tip portion includes an uninsulated, rigidly bent portion to facilitate placement of the distal tip portion at the target region, and wherein at least a portion of the distal tip portion comprises an electrically conductive surface that defines a treatment area.

12. An instrument for transmitting an electrical signal to a target region in a patient's body, comprising:

an electrically insulated elongated shaft;

a distal tip portion coupled to the elongated shaft, the distal tip portion defining an aperture, the aperture adapted to allow introduction of fluid into the patient's body, wherein the distal tip portion includes an uninsulated, rigidly bent portion to facilitate placement of the distal tip portion at the target region, and wherein at least a portion of the distal tip portion comprises an electrically conductive surface that defines a treatment area; and

an electrical connection for receiving the electrical signal, the electrical connection coupled to the distal tip portion.

* * * * *

UNITED STATES PATENT AND TRADEMARK OFFICE

BEFORE THE PATENT TRIAL AND APPEAL BOARD

AVANOS MEDICAL, INC.,
Petitioner,

v.

STRATUS MEDICAL, LLC,
Patent Owner.

IPR2024-01209
U.S. Patent No. 10,966,782

IPR2024-01210
U.S. Patent No. 10,736,688

IPR2024-01211
U.S. Patent No. 10,736,688

IPR2024-01212
U.S. Patent No. 10,925,664

DECLARTION OF A/PROFESSOR MARC ANDREW RUSSO

IPR2024-01209
Avanos v. Stratus
Stratus Ex. 2001

TABLE OF CONTENTS
[REFORMAT]

I. INTRODUCTION 4

II. QUALIFICATIONS AND EXPERTISE 6

III. BACKGROUND OF THESE CASES 11

A. Stratus Patents 11

B. IPR Petitions 12

C. Related Cases 13

IV. SUMMARY OF OPINIONS 14

V. APPLICABLE LEGAL PRINCIPLES 15

VI. RADIOFREQUENCY ABLATION 18

A. Overview of RF Neurotomy 22

B. History of RF Neurotomy 28

C. RF Neurotomy Procedures 33

1. Parallel Placement 33

2. Perpendicular Placement 39

3. Multifidus-Sparing Technique 43

VII. PERSON OF ORDINARY SKILL IN THE ART 46

VIII. ALLEGED PRIOR ART 48

A. Racz Is Directed to RF Neurotomy 48

1. Racz's Curved Tip 49

2. Racz's Gauges 50

B. Fitz Is Directed to RF Neurotomy 53

C. Lee Has Limited or No Relevance to Racz and Fitz 53

D. Young '965 Has Limited or No Relevance to Racz and Fitz 56

E. Scheibe Has Limited or No Relevance to Racz and Fitz 58

IX. STRATUS PATENTS 59

IPR2024-01209
Avanos v. Stratus
Stratus Ex. 2052
Page 121 of 198

IPR2024-01209
Avanos v. Stratus
Stratus Ex. 2001

X. RESPONSE TO DECLARATION OF DR TUCKER 62

XI. RESPONSE TO DEPOSITION OF DR TUCKER 68

A. Cannula Size for RF Neurotomy Needles 69

B. Scope of the Term "RF Neurotomy" 70

C. Dyes Do Not Make Nerves Visible Under Fluoroscopy 71

XII. CONCLUSION 73

IPR2024-01209
Avanos v. Stratus
Stratus Ex. 2001

IPR2024-01209
Avanos v. Stratus
Stratus Ex. 2052
Page 122 of 198

I, Marc Andrew Russo, declare as follows:

I. INTRODUCTION

1. I have been retained by Laurence & Phillips IP Law (L&P), which represents Stratus Medical, LLC (Stratus), to provide my independent expert analysis and opinions in connection with the following *inter partes* reviews (IPRs) at the United States Patent Trial and Appeal Board of the United States Patent and Trademark Office (USPTO):

IPR No.	U.S. Pat. No.
IPR2024-01209	10,966,782 (the '782 Patent)
IPR2024-01210	10,736,688 (the '688 Patent)
IPR2024-01211	10,736,688
IPR2024-01212	10,925,664 (the '664 Patent)

2. I will refer to the '782 Patent, the '688 Patent, and the '664 Patent collectively as the "Stratus Patents."

3. I am being compensated at a rate of AUD $3,000 per hour for my work on these cases, including providing this declaration. I have no financial interest in Stratus or the Stratus Patents, and my compensation is not dependent on the outcome of these cases or any related proceeding. My compensation does not in any way affect the substance of my testimony in this declaration.

4. I previously served as an expert witness for Stratus in Federal Court of Australia Proceeding No. NSD 438 of 2019, in which Stratus asserted two of its

IPR2024-01209
Avanos v. Stratus
Stratus Ex. 2001

IPR2024-01209
Avanos v. Stratus
Stratus Ex. 2052
Page 123 of 198

Australian patents—counterparts to the Stratus Patents—against Diros Technology, Inc. (Diros). I understand that the parties settled that Australian lawsuit in October 2021 and that the Petitioner, Avanos Medical, Inc. (Avanos), later acquired Diros. I understand that Avanos has identified Diros as its wholly owned subsidiary.

5. I wrote a preface to a practice guide titled "Robert E. Wright, *Radiofrequency Ablation in Interventional Pain Management Using RF Multitined Expandable Electrode* (1st ed. n.d.)," which preface is provided herewith as Exhibit No. 2003. I understand that Stratus provided financial support for the publication of this practice guide, but I received no compensation from Stratus or any other party for my contribution.

6. I have, and I have had, no relationship with Stratus other than those listed above. With respect to Stratus's Nimbus Device, I have pioneered a new technique using this device, which is well-suited for treating facet joint point. I performed this research without support from or compensation by Stratus. Additionally, I describe this technique in my article "Russo et al., *Development and Description of a New Multifidus-Sparing Radiofrequency Neurotomy Technique for Facet Joint Pain,* Pain Practice, 21(7): 747-758 (Apr. 13, 2021)," a copy of which is included herewith as Exhibit No. 2005. I likewise authored this article without support or compensation from Stratus.

7. I coauthored the article "Marc Russo et al., *A History of the Development of Radiofrequency Neurotomy*, J. of Pain Research 2021:14, 1389-3907 (Dec. 24, 2021)" with Dr Robert Wright, who is one of the inventors of the Stratus Patents. A copy of this article is included herewith as Exhibit No. 2004. I received no support or compensation from Stratus for my contribution to this article.

IPR2024-01209
Avanos v. Stratus
Stratus Ex. 2001

IPR2024-01209
Avanos v. Stratus
Stratus Ex. 2052
Page 124 of 198

II. QUALIFICATIONS AND EXPERTISE

8. I am a Specialist Pain Medicine Physician and have treated over 50,000 patients since establishing Hunter Pain Clinic (now Hunter Pain Specialists), Australia's first multidisciplinary private pain clinic, in 1999. I am the Director of Hunter Pain Specialists, Director of Hamilton Day Surgery, and the Co-Director of Innervate Pain Management Services. I am the Director and Principal Investigator of Genesis Research Services. I was a Co-Founder of the Newcastle Anaesthetic Peri-operative Service group. I am the Immediate Past-President of the International Neuromodulation Society (INS) and I am the founding president of the Neuromodulation Society of Australia and New Zealand (NSANZ). A copy of my *curriculum vitae* outlining my professional experience and memberships is included as Exhibit No. 2002.

9. In 1989, I was awarded a Bachelor of Medicine and Bachelor of Surgery (MBBS) from the University of Sydney, Australia.

10. From 1990 to 1992, I was a Resident at Gosford Hospital and Muswellbrook Practice in New South Wales, Australia.

11. In 1993, I was awarded a Diploma of Anaesthesia from Royal College of Anaesthetists, London, United Kingdom.

12. From 1993 to 1999, I was an Anaesthetic Registrar at John Hunter Hospital in Newcastle in New South Wales. In 1999, I became a Fellow of the Australian and New Zealand College of Anaesthetists (FANZCA).

13. When I began practising as an anaesthetist, I developed an interest in acute and chronic pain, and I decided to pursue a career in both anaesthesia and pain medicine. In 1999, I was appointed a Fellow at the West Australian Pain

IPR2024-01209
Avanos v. Stratus
Stratus Ex. 2001

IPR2024-01209
Avanos v. Stratus
Stratus Ex. 2052
Page 125 of 198

Management Centre, Sir Charles Gardiner Hospital in Perth, Western Australia, where I specialised in pain medicine. In 1999, I was also appointed a Fellow of the Royal Flying Obstetrics & Gynaecological Service in Roma, Queensland, Australia.

14. Since 1999, I have been appointed a Fellow of the Faculty of Pain Medicine, Australian and New Zealand College of Anaesthetists (FFPMANZCA).

15. In 1999, I founded and became a Director of Hunter Pain Clinic (now Hunter Pain Specialists). Around 2 ½ years later, I stopped practising as an anaesthesiologist and became a fulltime pain medicine specialist.

16. In 2001, I founded and became a Director of Hamilton Day Surgery, and Co-Director of Innervate Pain Management Services.

17. In 2005, I founded and became a Director of the Australian Pain Research Centre, Hunter Clinical Research, which now operates as Genesis Research Services, to further the study of pain management.

18. In 2016, I founded and became a Director of Sydney Pain Specialists, and served in the Director role until 2019.

19. In 2015, I became a Conjoint Lecturer at the University of Newcastle, Australia, in the School of Medicine and Public Health, College of Health, Medicine and Wellbeing.

20. Since 2021, I have been a Conjoint Associate Professor at the University of Newcastle, Australia, in the School of Medicine and Public Health, College of Health, Medicine and Wellbeing.

21. Since 2020, I have been an Honorary Associate Professor at the University of Hong Kong, Department of Anaesthesiology.

IPR2024-01209
Avanos v. Stratus
Stratus Ex. 2001

IPR2024-01209
Avanos v. Stratus
Stratus Ex. 2052
Page 126 of 198

22. I was the founding president of the Neuromodulation Society of Australia and New Zealand (NSANZ).

23. I was elected by my peers to serve as President of the International Neuromodulation Society (INS) from 2021-2024. INS is one of the most prominent global organizations for interventional pain medicine and is internationally respected. As noted on its website, INS

> is a non-profit group of clinicians, scientists and engineers dedicated to the scientific development and awareness of neuromodulation—the alteration of nerve activity through targeted delivery of a stimulus, such as electrical stimulation or chemical agents, to specific neurological sites in the body. The San Francisco-based INS was formed in 1989 and educates and promotes the field through meetings, its peer-reviewed journal *Neuromodulation: Technology at the Neural Interface*, mentorship, and chapter websites. The INS also provides information for patients and produces rolling news briefs about this rapidly evolving field."

International Neuromodulation Society, https://www.neuromodulation.com (last visited May 14, 2025).

24. I currently serve on the Examination Committee, Professional Standards Committee, Research and Innovation Committee, and Procedures Working Group for the Faculty of Pain Medicine, Australian and New Zealand College of Anaesthetists (ANZCA).

25. My current external appointments (and the approximate date of each appointment) are listed below:

- Deputy Chair, Pain Australia [July 2024].

IPR2024-01209
Avanos v. Stratus
Stratus Ex. 2001

IPR2024-01209
Avanos v. Stratus
Stratus Ex. 2052
Page 127 of 198

- Interim Director, Australian Medicinal Cannabis Association Board [September 2022].
- Deputy Chair, HMRI Brain Neuromodulation Research Program [2022].
- Member, Procedures Clinical Care Standard Working Group, Faculty of Pain Medicine, ANZCA [November 2018].
- Member, Procedures Working Group, Faculty of Pain Medicine, ANZCA [March 2018].
- NSW Regional Representative, Professional Standards Committee, Faculty of Pain Medicine, ANZCA [June 2017].
- Member, Research and Innovation Committee, Faculty of Pain Medicine, ANZCA [January 2017].

26. I have published over approximately 100 papers and book chapters in the field of pain medicine. I am a reviewer for the National Health and Medical Research Council (NHMRC), as well as a number of international journals, including:

- *The Lancet*, which is one of the world's most prestigious medical journals;
- *Neuromodulation: Technology at the Neural Interface*, the official journal of the International Neuromodulation Society;
- *Pain Practice*, the official journal of the World Institute of Pain;
- *Pain Medicine*, the official journal of the American Academy of Pain Medicine;
- *Pain and Therapy*, an international, open-access, peer-reviewed, rapid publication journal publishing high-quality research on the use of pain therapies and devices;

IPR2024-01209
Avanos v. Stratus
Stratus Ex. 2001
IPR2024-01209
Avanos v. Stratus
Stratus Ex. 2052
Page 128 of 198

- *Case Reports in Medicine*, an open access, peer-reviewed journal; and
- *The Journal of Spinal Cord Medicine*, which is published on behalf of the Academy of Spinal Cord Injury Professionals.

27. Throughout my career, I have regularly consulted a number of journal publications in the pain field. The journals which I have regularly reviewed to keep up to date with the state of knowledge in the RF neurotomy field include those I mentioned above and *Pain*.

28. Over the course of my career I have presented at more than approximately 100 conferences in Australia and internationally on various topics, including interventional pain medicine and interventional pain management treatments. I regularly attend and have attended conferences or meetings relevant to my practice as a pain specialist, including those organised by the IASP (International Association for the Study of Pain), American Academy of Pain Medicine, American Pain Society, International Society for the Study of the Lumbar Spine, and the International Spinal Injection Society.

29. I am currently a member of the following advisory boards:

- Medical Advisory Committee Member, Lingard Private Hospital [February 2014].
- Consultant, Seqirus (a CSL company) [October 2013].
- Medical Advisory Committee Member, Hamilton Day Surgery Centre [2011].

30. I have previously been a consultant or member of advisory boards (medical, scientific, or both) for Medtronic, Boston Scientific, Abbott (St Jude),

IPR2024-01209
Avanos v. Stratus
Stratus Ex. 2001

IPR2024-01209
Avanos v. Stratus
Stratus Ex. 2052
Page 129 of 198

Nevro Corp., Mainstay Medical, Cymbalta Pain, Saluda Medical, Mudjala Medical, Nalu Medical, Spine Thera, and Mundipharma.

31. I am a named inventor on U.S. Patent Application No. 15/090,580 relating to systems and methods for spinal cord stimulation and International Application No. PCT/AU2021/050028 relating to systems and methods for stimulating neurons.

32. I maintain numerous professional memberships, including Pain Australia, International Neuromodulation Society, Neuromodulation Society of Australia and New Zealand, Australian Pain Society, International Association for the Study of Pain, Australasian Neuroscience Society, Spine Society of Australia, and Australian Medical Association.

33. I have practised pain medicine continuously since about 1999. In my current practice, I typically perform 10 to 15 RF neurotomy procedures per day.

34. When I state my opinion in this declaration on what I consider the knowledge, understanding or practice of interventional pain specialists generally to be, this is based upon my own knowledge and experience, including my interactions with, and observations of the work of, professional colleagues since about 1999 in working as a pain medicine specialist, and my knowledge and experience of pain syndromes and disorders.

III. BACKGROUND OF THESE CASES

A. Stratus Patents

35. I understand that the patent application that led to the '782 Patent was filed at the USPTO on July 20, 2020 and claims benefit or priority to several earlier-

IPR2024-01209
Avanos v. Stratus
Stratus Ex. 2052
Page 130 of 198

IPR2024-01209
Avanos v. Stratus
Stratus Ex. 2001

filed patent applications. The first provisional application to which priority is claimed was filed on May 21, 2010, and the first utility patent application to which priority is claimed, by way of a series of continuations, was filed on May 4, 2011.

36. I understand that the patent application that led to the '688 Patent was filed at the USPTO on April 14, 2016 and claims benefit or priority to several earlier-filed patent applications. The first provisional application to which priority is claimed was filed on November 5, 2009, and the first utility patent to which priority is claimed, by way of continuation, was filed on November 5, 2010.

37. I understand that the patent application that led to the '664 Patent was filed at the USPTO on July 20, 2020 and claims benefit or priority to several earlier-filed patent applications. The first provisional application to which priority is claimed was filed on November 5, 2009, and the first utility patent to which priority is claimed, by way of a series of continuations, was filed on November 5, 2010.

38. I understand that the '688 and '664 Patents have essentially the same disclosure, including drawings and text, except for the claims. I understand that the '782 Patent includes much of the same text and many of the same drawings as the '688 and '664 Patent and further includes additional text and drawings.

39. I understand that Stratus makes and sells an RF neurotomy device called the "Nimbus® Multitined Expandable Electrode" (Nimbus Device), which is covered by the Stratus Patents.

B. <u>IPR Petitions</u>

40. I understand that Avanos filed four IPR petitions to instigate the IPRs listed above on July 26, 2024. I will refer to these IPR petitions collectively as the "IPR Petitions."

IPR2024-01209
Avanos v. Stratus
Stratus Ex. 2001

IPR2024-01209
Avanos v. Stratus
Stratus Ex. 2052
Page 131 of 198

41. I understand that the IPR Petitions rely on the following references, which the IPR Petitions allege to be prior art to the Stratus Patents:

- Racz: US 6,146,380
- Fitz: US 2005/0059964A1
- Lee: US 2007/0016183 A1
- Young '965: US 2006/0084965 A1
- Scheibe: US 2007/0260223 A1

42. I understand that each IPR petition was filed with a declaration from Dr Robert Tucker. I understand that those declarations are Exhibits 1031, 1032, 1033, and 1034 in IPR2024-01209, IPR2024-01210, IPR2024-01211, and IPR2024-01212, respectively. I will refer to those declarations collectively as the "Tucker Declarations."

C. Related Cases

43. I understand that Stratus has related patents in Australia for the same or similar inventions claimed in the Stratus Patents. I understand that, in the lawsuit identified in paragraph 4, *supra*, Diros attempted to invalidate the related Stratus Australian patents as part of an effort to enter the Australian market with two related RF neurotomy devices called "Trident™" and "Trident™ Hybrid" (the Trident Devices) that are similar to Stratus's Nimbus Device. I understand that case settled under confidential terms, which I do not know. I understand that Stratus's Australian patents remain in effect and that Stratus's Nimbus Device continues to be sold and used in Australia. In contrast, the Trident Devices, which were available in the Australian market prior to the Australian proceeding, to my knowledge have not been available in the Australian market since the Australian proceeding settled.

IPR2024-01209
Avanos v. Stratus
Stratus Ex. 2052
Page 132 of 198

IPR2024-01209
Avanos v. Stratus
Stratus Ex. 2001

44. I understand that approximately 20 months after settlement of the Australian proceeding that involved Diros, Avanos acquired Diros. I further understand that either Avanos or Diros continues to make the Trident Devices, and that Avanos presently sells the Trident Devices in the United States.

IV. SUMMARY OF OPINIONS

45. As explained in more detail in section VII below, it is my opinion that a person of ordinary skill in the art would have the knowledge and skills of an interventional pain specialist, such as myself.

46. It is also my opinion, as explained in more detail in section VIII-A below, that Racz teaches that its tip must be curved.

47. It is also my opinion, as explained in more detail in section VIII-A below, that a person of ordinary skill in the art would not interpret Racz as teaching that neurotomy needles can be sized larger than 16 gauge or smaller than 22 gauge.

48. It is also my opinion, as explained in more detail in section VIII-C below, that Lee has limited or no relevance to Racz and Fitz.

49. It is also my opinion, as explained in more detail in section VIII-D below, that Young '965 has limited or no relevance to Racz and Fitz.

50. It is also my opinion, as explained in more detail in section VIII-E below, that Scheibe has limited or no relevance to Racz and Fitz.

51. It is also my opinion, as explained in more detail in section X below, that a POSITA would not have found it obvious to combine the teachings of Racz, Fitz, and Lee to arrive at "Racz's modified device."

IPR2024-01209
Avanos v. Stratus
Stratus Ex. 2001

IPR2024-01209
Avanos v. Stratus
Stratus Ex. 2052
Page 133 of 198

V. APPLICABLE LEGAL PRINCIPLES

52. I am not a patent attorney, but I understand aspects of U.S. patent law that are relevant to my analysis and opinions. I summarize my understanding of some relevant patent law principles below.

53. I understand that in an IPR, the burden of proof is on the petitioner to show that each challenged claim is unpatentable and that the petitioner must do so by the preponderance of the evidence.

54. Even though none of the challenges in these IPRs are anticipation challenges, I recount my understanding of key aspects of anticipation for completeness.

55. I understand that, for a patented invention to be anticipated, a single prior-art reference alone must disclose every limitation in a claim, thus "anticipating" the claim.

56. I understand that, for anticipation to exist, there must be no difference between the claimed invention and the reference disclosure, as viewed by a person of ordinary skill in the art (POSITA).

57. I understand that anticipation requires that each element of the claim at issue be found, either expressly or under principles of inherency, in the reference.

58. I understand that inherent disclosure requires that the feature necessarily be present in the reference. The mere possibility that the feature is present is not enough to support inherent disclosure.

IPR2024-01209
Avanos v. Stratus
Stratus Ex. 2001

IPR2024-01209
Avanos v. Stratus
Stratus Ex. 2052
Page 134 of 198

59. I understand that anticipation requires more than simply locating each element entirely within a single document, but that document must also disclose those elements arranged together as in the claim.

60. I also understand that invalidity by anticipation requires that the prior-art reference's teaching of the claimed invention must teach a POSITA how to make and use the invention without undue experimentation.

61. I understand that, for a patented invention to be obvious, there must be prior-art references that alone or in combination would have rendered the claimed invention obvious to a POSITA at the time of the invention.

62. I understand that for a claim to be found obvious, every limitation of the claim must result from either a combination of the teachings of multiple prior-art references or a modification of a single prior-art reference.

63. I understand that the factors that should be assessed in the obviousness analysis include at least: (1) the scope and content of the prior art; (2) the differences between the prior art and the claim at issue; (3) the level of ordinary skill in the art; and (4) objective evidence as indicia of nonobviousness.

64. I understand that obviousness must take into account the ordinary knowledge, skills, and creativity of a POSITA.

65. I understand that a reason must be shown that would have prompted a POSITA to have combined or modified known elements in the fashion claimed by the patent at issue. Assertions that a combination or modification would have been obvious cannot be sustained by mere conclusory statements; instead, there must be some articulated reasoning with some rational underpinning to support the legal conclusion of obviousness.

IPR2024-01209
Avanos v. Stratus
Stratus Ex. 2001
IPR2024-01209
Avanos v. Stratus
Stratus Ex. 2052
Page 135 of 198

66. I understand that there must be a reasonable expectation of success in making or practicing the claimed invention based on the combination or modification of the prior-art reference(s) used to render a claimed invention obvious.

67. I also understand that the combination cannot modify a prior-art reference such that it would render the reference unsatisfactory for its intended purpose, change the principle of operation of a reference, or require a substantial redesign or reconstruction of the reference.

68. I understand that obviousness does not require that the teachings of the references be bodily incorporated together; rather, the focus is on the concepts taught by the references.

69. I understand that prior-art references must be considered as a whole, including aspects that teach away from a claimed invention or that may rebut a showing of obviousness.

70. I further understand that the obviousness inquiry must guard against slipping into use of hindsight and resist the temptation to read into the prior art the teachings of the invention in the patent at issue. Isolated elements from the prior art should not be picked and chosen and then combined using the invention as a blueprint if such a combination would not have been obvious at the time of the invention. In other words, it is impermissible to use the patent as a template (or reason) for combining prior-art references because that would be applying hindsight. A POSITA would have needed a reason to combine the references to create the claimed invention independent of the patent.

IPR2024-01209
Avanos v. Stratus
Stratus Ex. 2001

IPR2024-01209
Avanos v. Stratus
Stratus Ex. 2052
Page 136 of 198

71. I also understand that obviousness requires that the prior-art references collectively must teach a POSITA how to practice the invention without undue experimentation.

72. I understand that in view of the dates in section III.A, *supra*, the relevant dates for determining what a POSITA would have found obvious are one or more of November 5, 2009; May 21, 2010; November 5, 2010; and May 4, 2011, which I will consider collectively as November 5, 2009 through May 4, 2011 (the Relevant Dates).

73. I have not considered objective evidence of nonobviousness in this reexamination, but I know that there is such evidence, which further supports my opinion that the claims of the Stratus Patents are not obvious.

VI. RADIOFREQUENCY ABLATION

74. In this section, I refer to diagrams to illustrate my opinions. I confirm that these diagrams reflect my own knowledge and understanding of the matters I discuss.

75. "Ablation" refers to the removal or destruction of tissue. "Thermal ablation" refers to the destruction of tissue through the application of heat – that is, it is a physical event. "RF ablation" is a category of thermal ablation and refers to the destruction of tissue using heat generated from RF energy. RF ablation, as a clinical technique, is used in many different clinical applications, across separate medical fields.

76. There was no (and still today there are no) generalist "RF ablation" medical practitioners. Rather, the use of RF ablation as a treatment or therapy for a

IPR2024-01209
Avanos v. Stratus
Stratus Ex. 2001
IPR2024-01209
Avanos v. Stratus
Stratus Ex. 2052
Page 137 of 198

particular clinical application is practised by doctors specialised in the particular medical field in which the treatment/therapy is performed. For example, RF ablations for treatment of tumors are generally performed by a doctor specialised in the treatment of the organ affected by the tumour. Thus, RF ablations of uterine fibroids (which are technically a type of tumour) involve the uterus, and thus are performed by gynecologists. Similarly, RF ablations of bone tumours are performed by orthopaedic surgeons, of liver tumours are performed either by upper gastrointestinal or hepatic surgeons, and of thyroid tumours are performed by endocrine surgeons. Separately, RF ablations of the heart to treat arrythmias are performed by cardiologists. As a result, there has historically been little to no cross-talk between or cross-pollination of the various fields in which RF ablations are performed.

77. In like manner, there was no (and still today there are no) medical RF devices that are usable in all forms of RF ablation procedures. Nor are there RF generators (the "electrical boxes" that supply RF energy to medical RF devices) that are capable of use with all forms of RF ablation procedures. Rather, the various RF devices and the RF generators that supply energy thereto are and have always been highly specialized and narrowly tailored for the procedures in which they are used. This is in large part due to the peculiarities of human tissue. For example, ablating heart tissue is a very different from ablating a cancerous tumour for at least the reasons that the respective tissues involved have different impedances and other electrical properties and require different pathways through the human anatomy for proper device placement.

78. Before the Relevant Dates, as an interventional pain specialist practising in the pain medicine field, the particular application of RF ablation relevant to me, and which I practised, was RF ablation of nerves, or

IPR2024-01209
Avanos v. Stratus
Stratus Ex. 2001

IPR2024-01209
Avanos v. Stratus
Stratus Ex. 2052
Page 138 of 198

"RF neurotomy." RF neurotomy is used to treat pain arising from joints, particularly joints in the spine. To use a taxonomy analogy, thermal ablation is a family of clinical techniques, RF ablation is a genus, and RF neurotomy is a species.

79. RF neurotomy was (and still today is) a highly specialised field of practice. As at the Relevant Dates, RF neurotomy was performed almost exclusively by pain specialists and, even then, only a minority of pain specialists performed this procedure, being interventional pain specialists such as myself. As at the Relevant Dates, I spent approximately one third of my time in the operating room, with approximately 40% of my operating workload consisting of neurotomy procedures. And I spent the other two thirds of my time consulting, including consulting in relation to RF neurotomy procedures.

80. As at the Relevant Dates, I was aware that RF ablation techniques were also used by specialists in medical fields other than the pain medicine field, for clinical applications other than the destruction of nerves. For example, I was aware that RF ablation was used to destroy tumours in the cancer field and to treat cardiac arrhythmias in the cardiology field. However, as an interventional pain specialist, I do not, and did not before the Relevant Dates, perform RF ablation procedures to ablate tumours or to treat cardiac arrhythmias. Such procedures were performed by interventional radiologists, surgeons of the relevant specialties, or cancer surgeons, in the case of cancerous tumours, and by cardiologists, in the case of cardiac arrythmias.

81. Based upon my training, experience, and activities described herein, I have a very good knowledge and understanding of the state of knowledge of those working in the RF neurotomy field in Australia as at the Relevant Dates, and today, and I am aware that the level of knowledge in Australia in the RF neurotomy field

IPR2024-01209
Avanos v. Stratus
Stratus Ex. 2001
IPR2024-01209
Avanos v. Stratus
Stratus Ex. 2052
Page 139 of 198

was similar to that in comparable markets, such as the United States and elsewhere in North America, before and during the Relevant Dates and since that time.

82. Before and during the Relevant Dates I regularly kept up to date with developments in the RF neurotomy field (as I do today). Since 2002 I have had an automatic search set up on PubMed to search for publications which mention "radiofrequency and pain" and "pulsed RF and pain." I received a regular update from PubMed of any publications which met the search criteria. If I had wanted to better understand how a particular product or device that I used functioned, and I could not find that information in other literature, from time to time I would read relevant patent literature, but I did not conduct regular searches for patents.

83. Although I have, and had before the Relevant Dates, a general awareness of the use of RF ablation techniques in the cancer and cardiology fields, as an interventional pain specialist, I did not have detailed knowledge of the techniques or technologies used in those other fields, and I did not keep up to date with developments in the use of RF ablation techniques in those other medical fields. In my view, the literature and technologies used in those other clinical fields are not, and were not before the Relevant Dates, relevant to the practice of RF neurotomy, as the applicable anatomical and clinical considerations are not the same. The goal of any RF neurotomy procedure was (and is) to deliver energy to ablate a miniscule and precise area encompassing a target nerve in spinal joints (in the vast majority of neurotomy procedures), which are difficult to access and vary anatomically between patients. As I explain in more detail below, RF neurotomy was (and is) not a curative procedure. In contrast, before the Relevant Dates, I was aware that the goal of RF tumour ablation was to ablate, with the intention of permanently destroying and killing, tumour masses (for example, cancerous spherical tumour masses in the liver). I was also aware that the goal of RF cardiac ablation was to destroy a very

IPR2024-01209
Avanos v. Stratus
Stratus Ex. 2001

IPR2024-01209
Avanos v. Stratus
Stratus Ex. 2052
Page 140 of 198

small area of tissue in the atrial wall of the heart to permanently remove the cause of rapid and irregular heartbeats. Cardiac ablation was performed by threading a long, thin and flexible catheter endolumenally (that is, through the lumen of a blood vessel, not through tissue) to reach the heart.

A. Overview of RF Neurotomy

84. RF neurotomy is a minimally invasive procedure used to treat pain arising from joints, particularly in the spine, such as facet joint pain and sacroiliac joint pain. RF neurotomy procedures employ RF energy to selectively produce a lesion of pain-generating nerves (target nerves). Increased tissue temperature, beyond 45°C, leads to irreversible tissue injury and to cell necrosis, and is the therapeutic basis for RF neurotomy. The heat is targeted to create a small lesion within a nerve, which disrupts the pain signal. Radiofrequency is a term used to classify energy at a frequency in the range of 3 kHz to 300 GHz. In clinical applications, the energy is applied, within that range, typically at a frequency between 400 and 500 kHz.

85. RF neurotomy is performed by interventional pain specialists. Before the Relevant Dates, I regularly performed RF neurotomy to denervate facet joints and sacroiliac joints. Interventional pain specialists perform other procedures to manage and treat pain, such as nerve blocks and implantation of neuromodulation devices. A nerve block is an anaesthetic and/or anti-inflammatory injection that targets a certain *nerve* or group of *nerves* to diagnose and treat pain. Neuromodulation refers to the alteration of nerve activity through targeted delivery of a stimulus, such as electrical stimulation or chemical agents, to specific neurological sites in the body.

IPR2024-01209
Avanos v. Stratus
Stratus Ex. 2001

IPR2024-01209
Avanos v. Stratus
Stratus Ex. 2052
Page 141 of 198

86. The facet joints (or zygapophyseal joints or Z-joints) are synovial joints between the vertebrae of the spine. A synovial joint is a joint characterised by the presence of a fluid-filled joint cavity contained within a fibrous capsule. The facet joints help the spine to bend, twist and extend in different directions, but also to limit movement of the spine. The facet joints in the spinal column are located posteriorly to the vertebral body. At each spinal level, there is a pair of facet joints, spanning from the cervical to the lumbar spine. There are ten facet joints (five pairs) in the lumbar spine (the vertebrae of the lumbar spine are shown in Figure 1, below).[1]

1 Extracted from Cooper G. (2015) Clinical Anatomy of the Lumbosacral Spine. In: Non-Operative Treatment of the Lumbar Spine. Springer, Cham.

IPR2024-01209
Avanos v. Stratus
Stratus Ex. 2001
IPR2024-01209
Avanos v. Stratus
Stratus Ex. 2052
Page 142 of 198

Figure 1

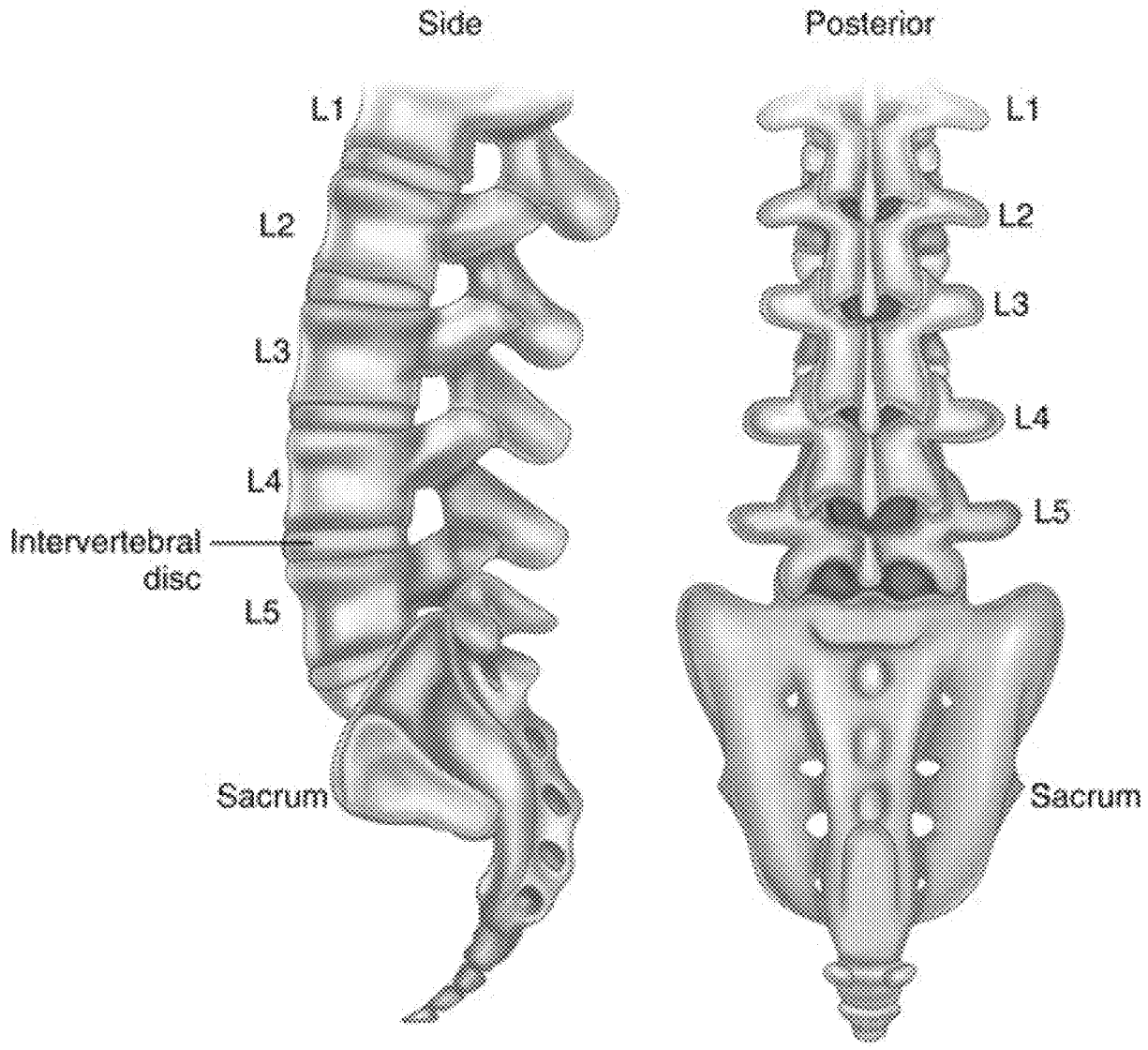

87. As shown in Figure 2, below,[2] each facet joint is surrounded by a capsule of connective tissue and produces synovial fluid to lubricate the joint. The surfaces of the joint are coated with cartilage that helps each joint to move smoothly. Nerves that branch off from the spinal cord pass through the facet joints. The nerves

2 Extracted from Manchikanti L., Schultz D.M., Falco F.J.E., Singh V. (2018) Lumbar Facet Joint Interventions. In: Manchikanti L., Kaye A., Falco F., Hirsch J. (eds) Essentials of Interventional Techniques in Managing Chronic Pain. Springer, Cham.

IPR2024-01209
Avanos v. Stratus
Stratus Ex. 2001
IPR2024-01209
Avanos v. Stratus
Stratus Ex. 2052
Page 143 of 198

that serve the facet joints themselves are called the medial branches. Each facet joint is innervated by two medial branch nerves, with one branch specific to its own vertebral level and the other branch from the level above (see Figure 3, below).[3] Lumbar facet joints receive their nerve supply from the medial branches of the dorsal rami of the spinal nerves.

3 Extracted from Kusper T.M., Cantu B., Knezevic N.N., Candido K.D. (2019) Low Back Pain. In: Abd-Elsayed A. (eds) Pain. Springer, Cham.

IPR2024-01209
Avanos v. Stratus
Stratus Ex. 2001
IPR2024-01209
Avanos v. Stratus
Stratus Ex. 2052
Page 144 of 198

Figure 2

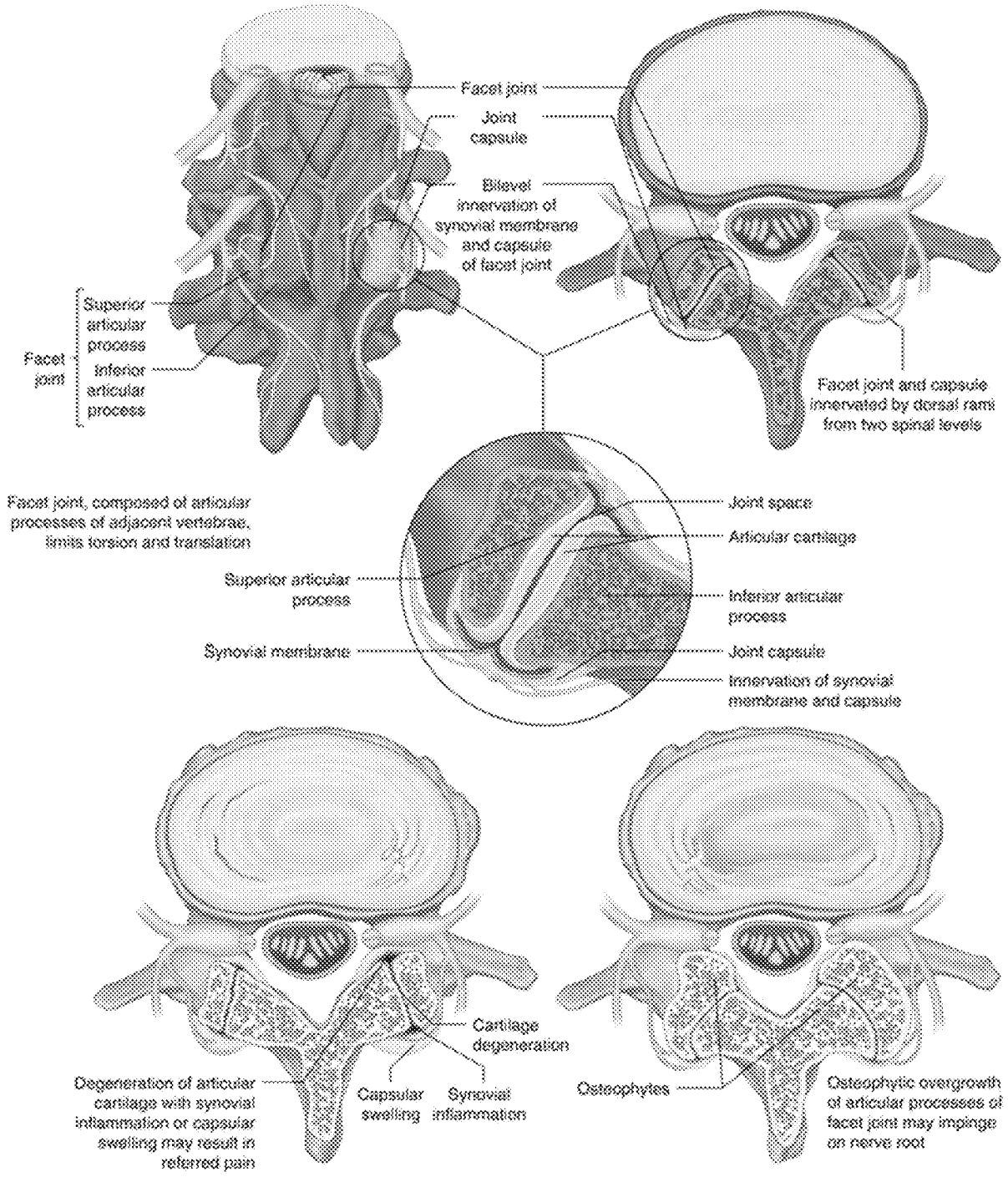

IPR2024-01209
Avanos v. Stratus
Stratus Ex. 2001
IPR2024-01209
Avanos v. Stratus
Stratus Ex. 2052
Page 145 of 198

Figure 3

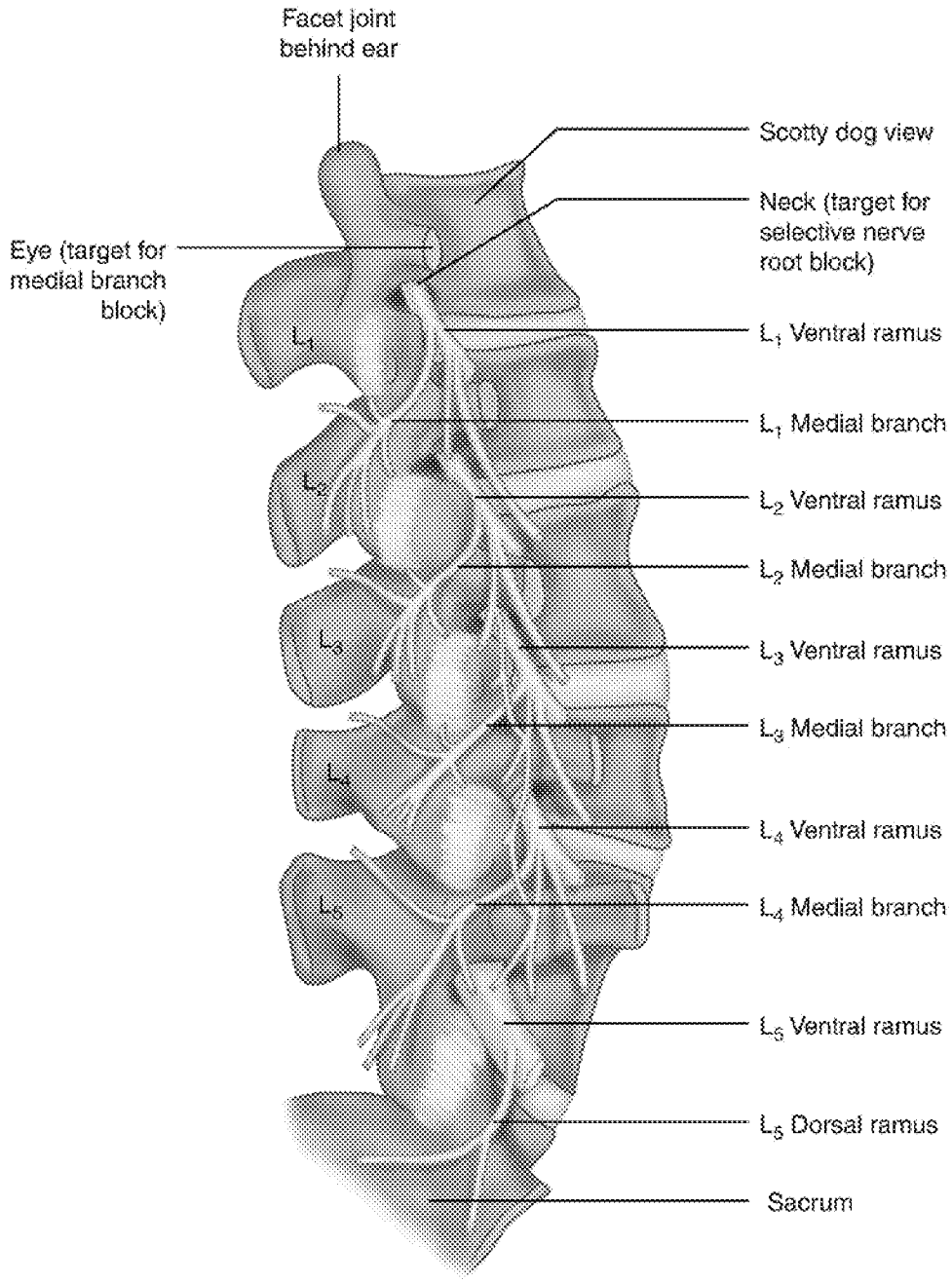

IPR2024-01209
Avanos v. Stratus
Stratus Ex. 2001

IPR2024-01209
Avanos v. Stratus
Stratus Ex. 2052
Page 146 of 198

88. The sacroiliac joint is a synovial joint between the ilium and the sacrum bones of the pelvis. As can be seen in Figure 4, below,[4] there are two sacroiliac joints which sit on each side of the spine. They are connected by strong ligaments. Their main job is to act as shock absorbers, transmitting and absorbing the forces of the upper body to the pelvis and legs.

Figure 4

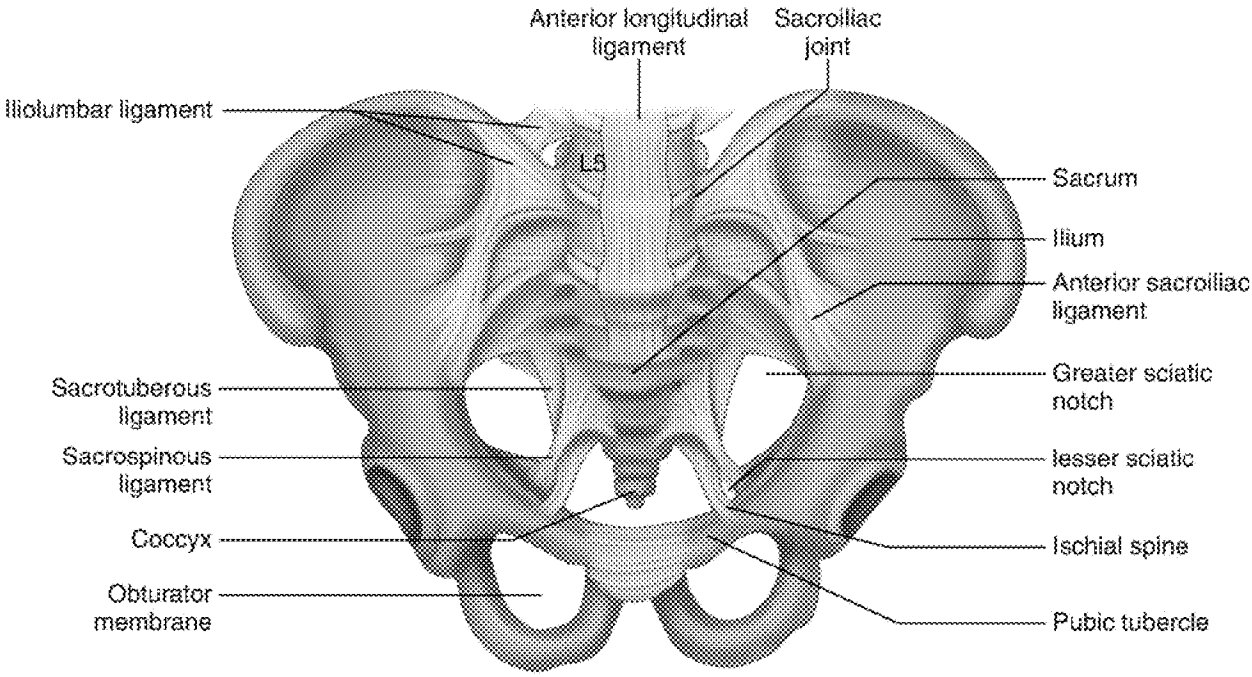

B. History of RF Neurotomy

89. As previously noted, I am a coauthor of the article "Marc Russo et al., *A History of the Development of Radiofrequency Neurotomy*, J. of Pain Research 2021:14, 1389-3907 (2021)." That article and the following discussion of the history of radiofrequency neurotomy are drawn from my decades of studying and practicing in this field.

4 Extracted from Ehrhardt K.P., Jones M.R., Kaye A.D. (2019) Sacroiliac Joint. In: Abd-Elsayed A. (eds) Pain. Springer, Cham.

IPR2024-01209
Avanos v. Stratus
Stratus Ex. 2052
Page 147 of 198
IPR2024-01209
Avanos v. Stratus
Stratus Ex. 2001

90. Historically, low back pain was considered to be an inflammatory condition. Treatments varied but were essentially unsuccessful.

91. During World War I, Vincent Nesfield, an English surgeon, developed the procedure percutaneous neurotomy (sometimes called "Nesfield's treatment"). In 1914, Nesfield began attempting to treat cases of "trench back," a condition caused by the collapse of earth or sandbags onto a person in a trench, or developed in the process of digging a trench. While it was generally thought that this condition related to contusion of the muscles and fascia, Nesfield thought the cause was a sensory nerve caught up in muscle or tendon. Nesfield used a fine, long, curved ophthalmic scalpel to make an incision on either side of the spine, and moved it back and forth vertically attempting to cut the relevant nerve. He never published his technique.

92. In 1960, Dr William Skyrme Rees, a Welsh urological surgeon, saw a patient who had been treated by Nesfield. Rees subsequently began practising "Nesfield's treatment" in the UK.

93. In 1965, Rees emigrated to Australia and began a specialised practice treating patients with chronic lower back pain. Rees further refined the concept of "Nesfield's treatment" to be one of dividing the sensory nerve to the facet joint (the dorsal ramus nerve).

94. In 1971, Rees published a paper on his technique, "multiple bilateral subcutaneous rhizolysis," in which he described severing the nerves to the facet joints percutaneously using a scalpel.

95. Anatomist Dr Nikolai Bogduk later dissected cadavers, on which Rees had performed his technique, and revealed that Rees' technique was based on false

IPR2024-01209
Avanos v. Stratus
Stratus Ex. 2001

IPR2024-01209
Avanos v. Stratus
Stratus Ex. 2052
Page 148 of 198

anatomy. Bogduk demonstrated that that the facet joint nerve was never divided in the procedure, only the fascia of muscle. Bogduk concluded that Rees was in fact performing a fasciotomy procedure for muscles in spasm, thereby relieving the spasm. Rees' technique all but ceased to be used after 1980.

96. The next major step forward in the treatment of facet joint pain was the shift from the scalpel to the use of RF energy. The use of RF lesioning techniques dates back to the 1950s, but the first clinical application of an RF lesion in spinal facet pain was reported in 1974 by renowned American neurosurgeon Dr C Norman Shealy, inventor of both Transcutaneous Electrical Nerve Stimulation (TENS) and spinal cord stimulation, and surgeon to John F Kennedy.

97. In 1970, Shealy travelled to Australia to learn percutaneous rhizolysis from Rees. Shealy published his experience of using Rees' technique on 24 patients, reporting a 20% incidence of unacceptable haematoma formation.

98. In 1971, Shealy devised the technique of percutaneous RF denervation of the facet joints by medial branch nerve neurotomy, derived from the principles used with gasserian ganglion thermal RF (a technique used to treat trigeminal neuralgia, a chronic pain condition affecting the trigeminal nerve in the face). Shealy first described his technique in a 1974 paper as follows:

> Under fluoroscopic guidance 14 gauge thin-walled cannulae are guided adjacent to the centers of tender facet joints. A radiofrequency thermister electrode (19 cm long, 1-2 mm diameter) is passed through one needle, the needle is withdrawn, and the electrode is slipped over the edge of the facet and advanced to the intertransverse ligament. A lateral x-ray film confirms the position of the electrode and its distance from the main nerve root . . . .

IPR2024-01209
Avanos v. Stratus
Stratus Ex. 2001

IPR2024-01209
Avanos v. Stratus
Stratus Ex. 2052
Page 149 of 198

Shealy, *Facets in back and sciatic pain. A new approach to a major pain syndrome*, Minn Med. 57(3):199-203 (1974).

99. Shealy worked with Eric Cosman Snr (a Professor of Physics) and his father Bernard Cosman (an electrical engineer), US medical device entrepreneurs and founders of Radionics (originally called Cosman and Company), to design the SRK Shealy Rhizolysis Kit. The Cosmans had built the first commercial RF lesion generator in the 1950s. The original SRK Shealy Rhizolysis Kit comprised a set of 14-gauge spinal needles (also referred to as cannulas) that could be inserted percutaneously. Gauge refers to the inner measurement or opening of the needle, and the higher the number, the smaller the needle. A 16-gauge RF electrode, insulated except for an exposed 7 mm distal tip, could then be passed through the 14-gauge spinal needle/cannula, and could be advanced so that the electrode tip contacts the medial branch innervating the selected facet joint. Shealy's technique was performed using the SRK Shealy Rhizolysis Kit by neurosurgeons under general anaesthesia, due to the pain involved in needle placement.

100. In 1974, Eric Cosman Snr and Dr C Ray designed a variant of the SRK Shealy Rhizolysis Kit – the RRE Ray Rhizotomy Electrode Kit – produced by Radionics. The 16-gauge RRE Ray Rhizotomy Electrode Kit comprised a tissue penetrating tip, an insulated shaft, and an integrated temperature sensor, and eliminated the need for the spinal needles/cannulas.

101. In or around 1976, Dutch anaesthesiologist Menno Sluijter and Eric Cosman Snr designed the SMK Kit electrode series, having finer gauge needles/cannulas (22-gauge, 20-gauge and 18-gauge variants) than the SRK Shealy Rhizolysis Kit and RRE Ray Rhizotomy Electrode Kit. These finer gauge electrode kits were transformational, as they allowed the procedure to be performed on

IPR2024-01209
Avanos v. Stratus
Stratus Ex. 2001

IPR2024-01209
Avanos v. Stratus
Stratus Ex. 2052
Page 150 of 198

patients under sedation (as opposed to general anaesthesia) and in procedure rooms by anaesthesia-based pain specialists (rather than operating room-based neurosurgeons) and significantly increased the number of patients who could be treated and the number of specialists who could be trained in the technique. The use of the smaller gauge needles/electrodes meant small volume lesions were created, and thus more lesions were required to achieve a successful neurotomy over the same area.

102. Shealy's technique has been modified and refined over time, as knowledge of the anatomical and physiological basis for the technique improved. In 1979, Bogduk modified the technique described by Shealy to improve accuracy, having identified that, in Shealy's technique, the electrode was being placed somewhat remotely from the target nerve. Despite those findings, and Bogduk recommending a revised technique, many continued to use Shealy's original technique.

103. In the early 1980s, Sluijter developed refined techniques for cervical, thoracic, lumbar, and sacral spinal pain syndromes using percutaneous RF techniques.

104. In 1987, Bogduk demonstrated that the lesion made by the RF neurotomy device did not extend distally from the tip of the electrode, but instead spread sideways about the longitudinal axis of the electrode, with the result that an electrode placed perpendicularly to the course of the nerve would not reliably coagulate the nerve. Bogduk's findings meant that, in order to be effective, the needles/cannulas containing the electrode should instead be placed parallel to the target nerve(s).

IPR2024-01209
Avanos v. Stratus
Stratus Ex. 2001

IPR2024-01209
Avanos v. Stratus
Stratus Ex. 2052
Page 151 of 198

105. A further version of Sluitjer's electrode system, available before the Relevant Dates, was the produced by Cosman Medical, Inc (the company founded by Eric Cosman Snr following the sale of Radionics). In use, this RF neurotomy device was placed parallel to the target nerve(s), consistent with Bogduk's findings.

106. Other manufacturers of RF generators and RF neurotomy devices before the Relevant Dates included Smith & Nephew and Stryker Instruments. The RF neurotomy devices produced by these other manufacturers were similar to, and worked in a similar way to, the Radionics and Cosman Medical, Inc devices I described above.

107. As noted in my article *A History of the Development of Radiofrequency Neurotomy*, referenced above, cooled radiofrequency ablation is another technology that eventually found application in radiofrequency neurotomy. With cooled radiofrequency ablation, the active tip design was relatively unchanged, but a cooling system allowed for controlled enlarged lesions to be performed without inducing tissue charring. Cooled radiofrequency ablation was first developed in the late 1990s for use in the cardiac field for arrhythmia management, and then found application in tumour ablation as a method to enlarge the tumour destruction volume. The technology was first introduced into the pain management field via custom designed equipment for treatment of sacroiliac joint pain. It was eventually applied to medial branch neurotomy in 2014.

C. RF Neurotomy Procedures

1. Parallel Placement

108. As at the Relevant Dates, a RF neurotomy procedure was typically carried out as follows. With the patient prone on the operative table, the specialist

IPR2024-01209
Avanos v. Stratus
Stratus Ex. 2001
IPR2024-01209
Avanos v. Stratus
Stratus Ex. 2052
Page 152 of 198

would carefully insert a needle/cannula through the skin around the spine and, under fluoroscopic guidance, place it parallel and adjacent to the target nerve. The specialist would insert the RF electrode into the needle/cannula. A small amount of electrical stimulation was applied to elicit feedback on electrode placement. The patient received a small amount of sedation but would remain awake enough to respond to the electrical stimulation. The device was carefully held in place while the surrounding tissue temperature was increased gradually through the application of RF energy (for example, increasing by 10°C every 5-10 seconds starting from ambient temperature). The RF energy was transmitted to the surrounding tissue from the RF electrode via the uninsulated tip of the needle/cannula. A final lesion was made at 80-90°C for 60 to 90 seconds.

109. The RF energy worked through a closed circuit, with the RF electrode acting as the circuit's cathode, and grounding pads applied to the patient's body acting as the anode, and RF energy being conducted from the RF generator to the RF electrode and through the tissue to the grounding pads. That is, the system operated as a monopolar RF system (compared with a bipolar RF system, in which current flows between two electrodes without a grounding pad). The application of voltage between electrodes connected by tissue in this closed circuit created an electrical field which caused current to flow. Oscillating voltage moved ions in the tissue electrolytes back and forth, generating friction and heat (between 80-90°C) in the tissue, which in turn heated the electrode tip. The heat from the tip dissipated in the tissue, leading to coagulation necrosis, and was responsible for the resulting lesion. The heat was primarily generated in the tissue around the electrode's active tip and created concentric tissue lesions of lower temperature as the distance from the tip increased.

IPR2024-01209
Avanos v. Stratus
Stratus Ex. 2001

IPR2024-01209
Avanos v. Stratus
Stratus Ex. 2052
Page 153 of 198

110. As one facet joint is innervated by two medial branch nerves, RF neurotomy was (and is) performed at two levels on one side. The procedure could be performed on both sides or more than one spinal level on the same side. As at the Relevant Dates (and still today), the goal of any RF neurotomy procedure was to achieve complete destruction of the tissue of the target nerve and minimal destruction of the surrounding tissue. Meticulous placement of the needle/cannula (containing the electrode) near the target nerve was critical for the success of RF neurotomy procedures. Therefore, comprehensive knowledge of the topography of the target nerve tissues, as well as surgical precision, was required in order to successfully navigate through tissue, muscle, and around bone, to reach the target area and create a very precise and controlled lesion encompassing the target nerve, while avoiding causing damage to surrounding structures. Consistent optimal placement of the RF electrode, parallel and adjacent to the target nerve, was difficult, even for very experienced interventional pain specialists.

111. The size of the desired ablation area depended on the size of the target nerve. For each target nerve (each medial branch), the RF neurotomy device was introduced into the patient (or "passed") twice at different angles, and lesions made in several locations along the course of the target nerve, to accommodate possible variations in the exact location of the nerve. The medial branch nerve is tiny—about 10 times thicker than a human hair. And although the device was passed twice and several lesions made, the position of the tip of the device at the target was changed only ever so slightly (for example, by 2 mm).

112. Lesion size was determined by numerous factors, including tip gauge, tip length, temperature and time. The geometry of each lesion was a prolate spheroid or egg shape. As I described above, before the Relevant Dates it was known that there was minimal lesion formation distally beyond the electrode tip, with a

IPR2024-01209
Avanos v. Stratus
Stratus Ex. 2001

IPR2024-01209
Avanos v. Stratus
Stratus Ex. 2052
Page 154 of 198

circumferential lesion produced around the electrode tip (as shown in Figure 5, below).[5] The total volume of the ablated area (after making the necessary number of lesions) was approximately 0.5 cm^3.

Figure 5

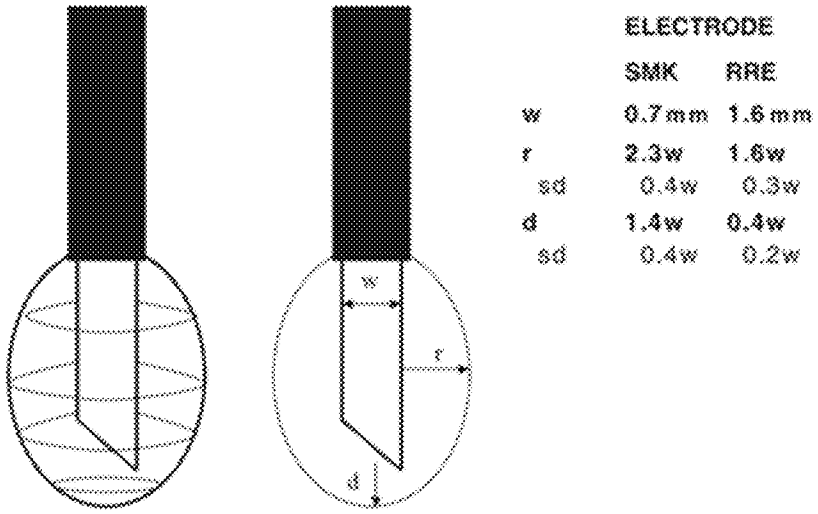

The geometry of the lesion generated by a thermal radiofrequency current. The volume of tissue coagulated assumes the shape of a prolate spheroid, i.e., elliptical in longitudinal section and circular in transverse section. The radial extent (r) of the lesion beyond the surface of the electrode and its distal extent (d) beyond the tip of the electrode are functions of the width (w) of the electrode. The inset shows the actual dimensions of lesions generated by two types of electrodes [9,10]. SMK, RRE = electrode types manufactured by Radionics Inc., Burlington, MA.

113. RF neurotomy procedures were (and still today are) not without risks. Such risks included infection, damage to surrounding blood vessels and nerves during needle insertion (which may result in excessive bleeding and/or irreversible

5 Extracted from Nikolai Bogduk, MD, PhD, DSc, Pulsed Radiofrequency, *Pain Medicine*, Volume 7, Issue 5, September 2006, Pages 396–40 (original figure numbering omitted).

IPR2024-01209
Avanos v. Stratus
Stratus Ex. 2001
IPR2024-01209
Avanos v. Stratus
Stratus Ex. 2052
Page 155 of 198

neurologic damage causing long-term numbness and tingling), and heat damage to structures adjacent to the target nerve.

114. While the aim of RF neurotomy was to alleviate the patient's pain, the procedure was (and still today is) not a permanent cure, but rather a palliative treatment. Most patients experienced some pain relief after RF neurotomy, but the amount varied by cause of pain and location. The procedure could fail if the electrode was not placed optimally near the target nerve or if anatomic variations were not effectively incorporated into the lesion. The procedure could provide pain relief for many months, and possibly a couple of years. Pain would recur because coagulated nerves can regenerate. In such cases, the procedure was usually repeated. The failure rate was a shortcoming of RF neurotomy before the Relevant Dates.

115. Notwithstanding that shortcoming, after all of the developments I described above, the collaboration (of the kind I described elsewhere in this declaration) between medical specialists and engineers/industry stagnated, and the RF neurotomy field experienced somewhat of an "ice age" in terms of product development throughout the 1990s and 2000s. In my view, the reasons for this lack of new product development included that some of the companies that manufactured RF neurotomy devices were relatively small companies, as well as a pervasive "groupthink" among specialists practising RF neurotomy, including myself, that the technology had peaked. The advances in the technology used in the RF neurotomy field were largely in the RF generators, rather than the RF neurotomy devices. For example, in 1998, Sluijter published on the use of pulsed RF neurotomy of the dorsal root ganglion. Pulsed RF neurotomy applies an intermittent burst of electrical current to the target nerve, at a temperature of about 42°C, but does not heat it.

IPR2024-01209
Avanos v. Stratus
Stratus Ex. 2001

IPR2024-01209
Avanos v. Stratus
Stratus Ex. 2052
Page 156 of 198

116. As far as development of RF neurotomy devices was concerned, little changed until the release of the Nimbus Device, which occurred after the Relevant Dates. The Nimbus Device was invented by Denver pain specialist Dr Robert Wright. I first met Dr Wright after the Relevant Dates at a conference. I recall that I first became aware of the Nimbus Device in 2013 at a conference. I first began using the Nimbus Device in early 2014.

117. My view, and I believe the view of others working in the RF neurotomy field, is that the Nimbus Device was a "game changer" in the RF neurotomy field. The Nimbus Device enabled interventional pain specialists, including myself, to use a different and, for many reasons, superior anatomical pathway to reach the medial branch through positioning near the facet joint.

118. As discussed above, as at the Relevant Dates, traditional RF neurotomy needles required "parallel" placement of their active tips alongside a medial branch nerve due to the shape of the small ablation volume produced thereby to maximise the likelihood of successfully lesioning the medial branch nerve. That is, by placing an active tip alongside and substantially parallel to the medial branch nerve and the surface of the bone over which that medial branch nerve passes, the ablation volume created by the tip would have the greatest probability of encompassing the targeted portion of the medial branch. Three such parallel placements of traditional RF neurotomy needle tips alongside three medial branches are depicted in Figure 6 below.

IPR2024-01209
Avanos v. Stratus
Stratus Ex. 2001

IPR2024-01209
Avanos v. Stratus
Stratus Ex. 2052
Page 157 of 198

Figure 6

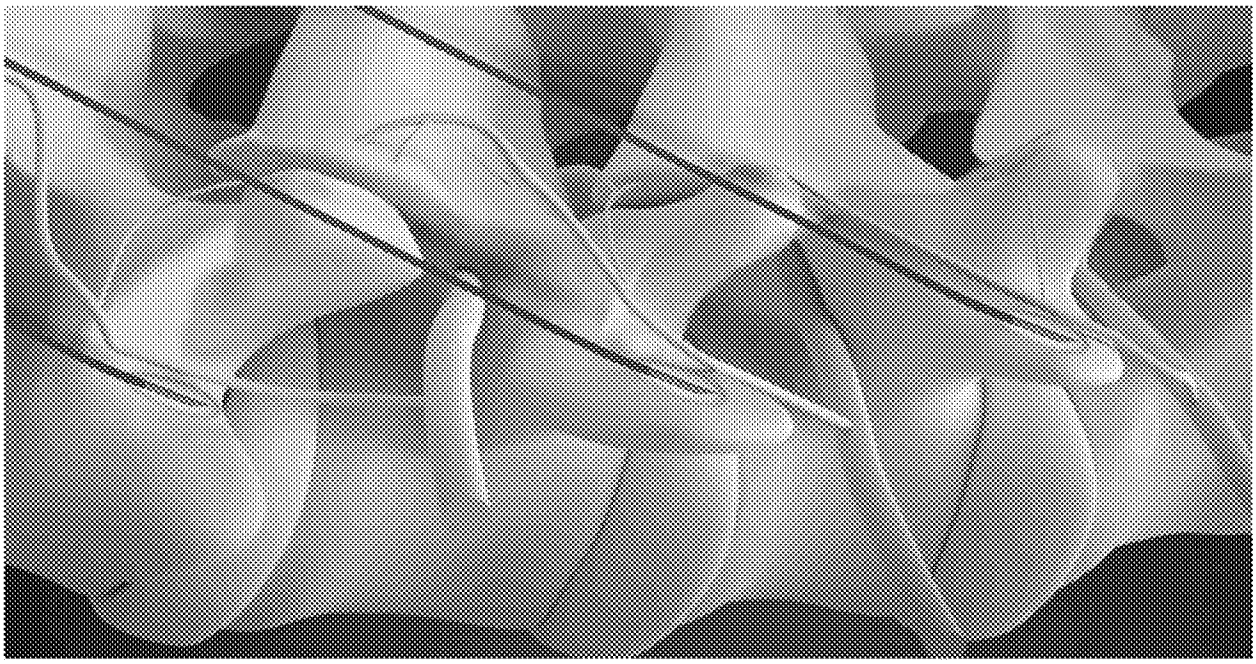

2. Perpendicular Placement

119. Using a "perpendicular" placement of the traditional RF neurotomy needles would not effectively or reliably lesion the medial branch because these needles produce only a small ablation region at and distal to their tips, as previously discussed at paragraphs above and as shown below in Figure 8. With a perpendicular placement, the RF neurotomy needle is situated generally perpendicular to the medial branch nerve and the surface of the bone over which that medial branch nerve passes, such that the distal tip of the RF neurotomy needle generally points at, or in the vicinity of, the medial branch nerve, thus exposing the medial branch nerve to only a small portion of the ablation volume generated by the RF neurotomy needle. For reference, perpendicular placements of Nimbus Device devices are depicted in Figure 9 below.

120. In contrast to traditional RF neurotomy needles, the Nimbus Device employs two small tines, which can be deployed from the tip of the needle/cannula

IPR2024-01209
Avanos v. Stratus
Stratus Ex. 2001
IPR2024-01209
Avanos v. Stratus
Stratus Ex. 2052
Page 158 of 198

(see Figure 7, below). The deployment of the tines is controlled by a rotatable spin collar. An RF probe (not shown in image below) is inserted into the needle, and RF energy is conducted through the tip of the needle/cannula and the tines, in a monopolar system. The Nimbus Device was the first neurotomy needle with deployable tines.

Figure 7

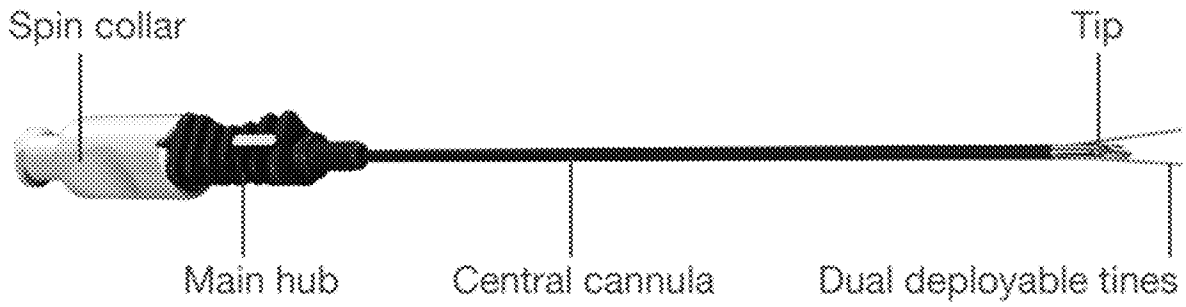

121. The presence of the Nimbus Device tines results in RF energy being applied across a larger area compared with traditional RF neurotomy needles, as shown in the side-by-side comparison in Figure 8 below. Moreover, the ablation volume created by the Nimbus Device is expanded beyond the needle tip, as compared with the traditional RF neurotomy needle.

Figure 8

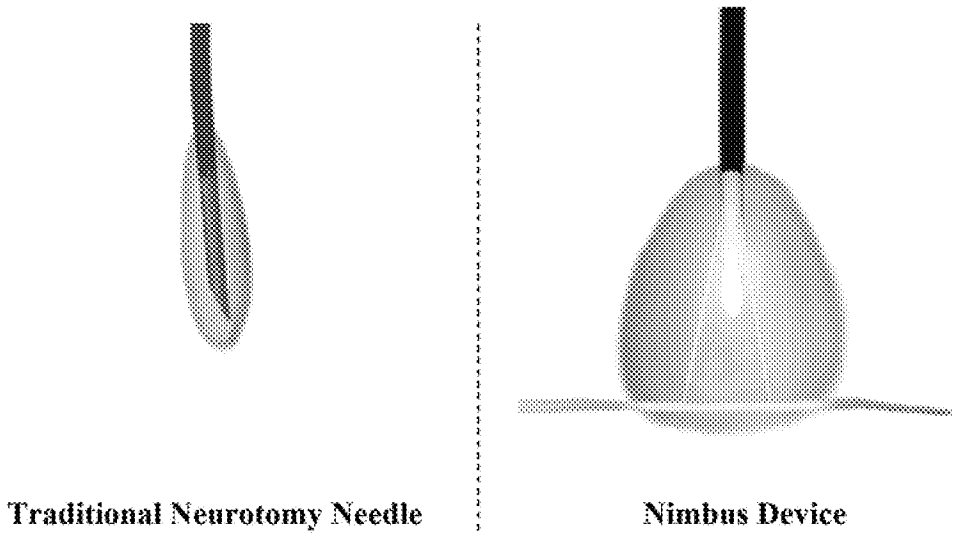

IPR2024-01209
Avanos v. Stratus
Stratus Ex. 2001

IPR2024-01209
Avanos v. Stratus
Stratus Ex. 2052
Page 159 of 198

122. With its expanded lesion profile, the Nimbus Device permits effective use of the perpendicular approach to the medial branch nerve, as illustrated in Figure 9 below. In this image, perpendicular placements of three Nimbus Device devices at three adjacent vertebral levels are depicted, which can be contrasted with the parallel placements of traditional RF neurotomy needles shown in Figure 6 above.

Figure 9

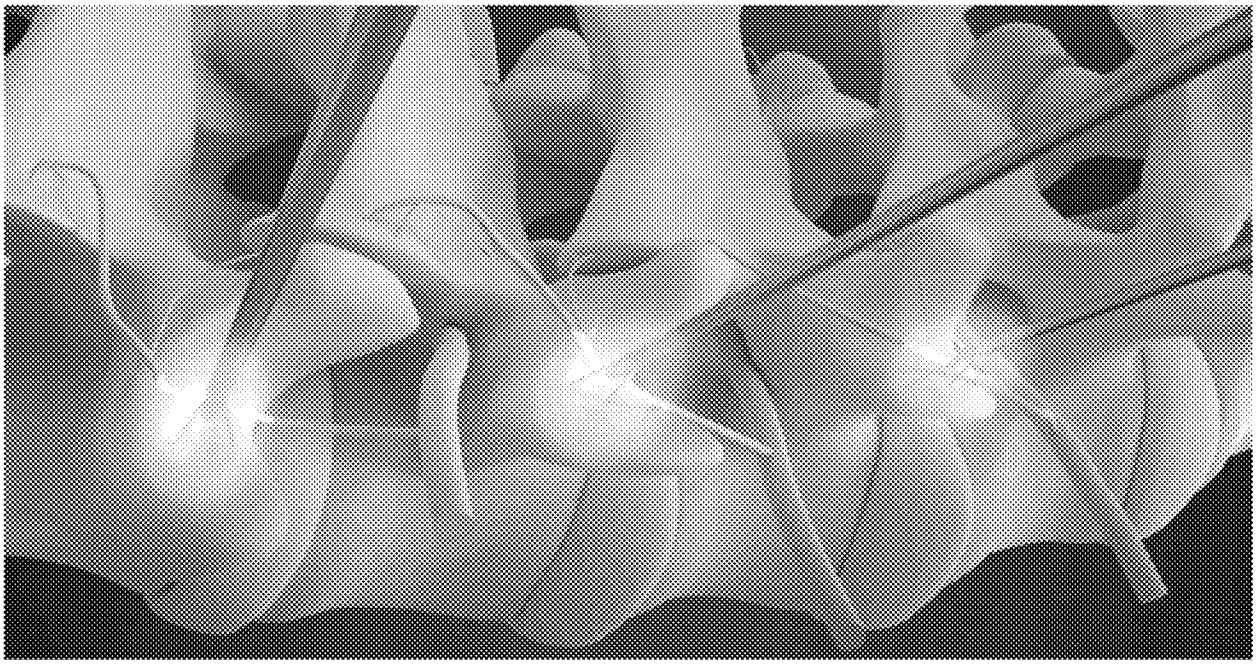

123. The perpendicular approach thus enabled by the Nimbus Device has numerous advantages over the parallel approach, including being safer, faster, and easier to learn.

124. The perpendicular approach is safer due to the presence of inherent anatomical safeguards. As can be appreciated from Figure 9 above, with this approach, the practitioner advances the needle until the tip hits bone. The needle tip is then slightly retracted from the bone surface and the tines are deployed. The bone thus serves as a safety backstop that assists in accurate placement of the device. In

IPR2024-01209
Avanos v. Stratus
Stratus Ex. 2052
Page 160 of 198

IPR2024-01209
Avanos v. Stratus
Stratus Ex. 2001

contrast, no such backstop exists with the parallel placement described above with respect to Figure 6. If a practitioner inadvertently advances the needle tip too far using this approach, the larger nerve root (depicted in a relatively vertical orientation in Figures 6 and 9) could be damaged by the needle tip itself or by subsequent ablation, which can result in at least temporary paralysis or other nerve injury.

125. The perpendicular approach is also faster, when used with the Nimbus Device, because it allows medial branch nerve ablation procedures to be completed with fewer heat cycles and less damage to surrounding tissue, as compared with the parallel approach. With the perpendicular Nimbus Device approach, only a single lesion (and only a single pass of the device) is required to thoroughly coagulate the target nerve.

126. The perpendicular approach is also more easily learnt by interventional pain specialists than is the parallel approach because the so-called "eye of the Scotty dog" can be used as a target point. The "eye of the Scotty dog" is an artifact readily visible in X-ray images of a healthy spine along the pathway used for perpendicular needle placement. The artifact resembles the eye of a Scottish terrier, as identified in Figure 10 below with the number "2" in the image on the left and with a dotted oval in the image on the right.[6] The "eye of the Scotty dog" corresponds with the portions of the bone over which the medial branch nerve passes—these same regions are generally "highlighted" in yellow by the depiction of ablation zones in Figure 9 above. As the "eye of the Scotty dog" pathway is the same pathway typically used for medial branch blocks (injections of anaesthetic near the medial branches), use of

6 Extracted from Daniel MacManus, Scottie dog sign (spine), Figure 3, available at https://radiopaedia.org/articles/scottie-dog-sign-spine (last revised Mar. 9, 2025).

IPR2024-01209
Avanos v. Stratus
Stratus Ex. 2001

IPR2024-01209
Avanos v. Stratus
Stratus Ex. 2052
Page 161 of 198

this well-known pathway further contributes to its ease of adoption by these interventional pain specialists.

Figure 10

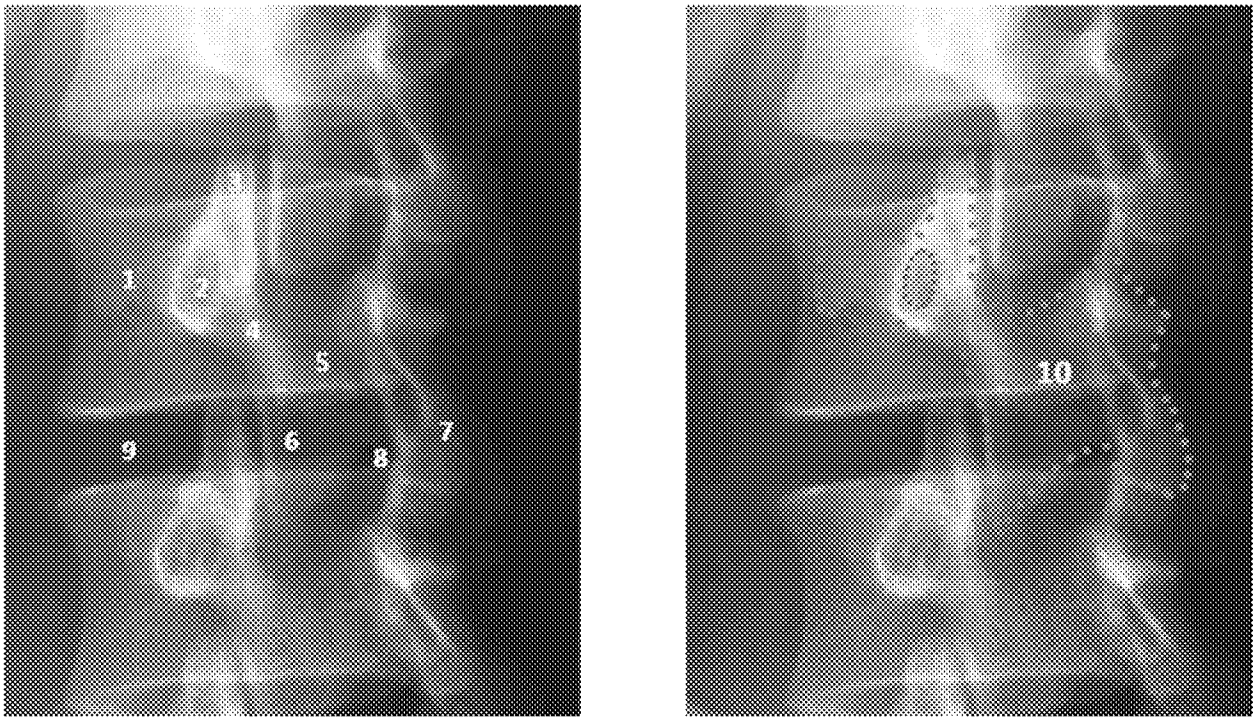

127. Due to it being safter and easier to use, the perpendicular needle placement made possible by the Nimbus Device facilitated medial branch neurotomy for skilled practitioners, and these features in combination with it being easier to learn enabled a greater number of specialists to perform such RF neurotomy procedures.

3. <u>Multifidus-Sparing Technique</u>

128. In addition to enabling the parallel approach for medial branch denervation, the unique properties of the Nimbus Device have empowered further innovations in RF neurotomy and improved RF neurotomy techniques that are beneficial to practitioners and patients.

IPR2024-01209
Avanos v. Stratus
Stratus Ex. 2001

IPR2024-01209
Avanos v. Stratus
Stratus Ex. 2052
Page 162 of 198

129. As one example, I have pioneered a new technique for denervation of the facet joint capsule to treat facet-joint pain using the Nimbus Device. This technique is an advantageous alternative to the parallel and perpendicular medial branch denervation techniques previously discussed. I describe this technique, called the multifidus-sparing RF neurotomy technique (MSRFN technique), in my article "Russo et al., *Development and Description of a New Multifidus-Sparing Radiofrequency Neurotomy Technique for Facet Joint Pain*, Pain Practice, 21(7): 747-758 (Apr. 13, 2021)." A copy of this peer-reviewed article is included as Exhibit No. 2005.

130. By targeting the facet joint capsule, the MSRFN technique advantageously avoids denervation of the multifidus muscle, which is thought to be important in recovering from low back pain. The medial branches targeted in the parallel and perpendicular approaches supply not only the facet joint, but also the multifidus muscle, and there is good evidence that conducting RF neurotomy using these approaches denervates this muscle. In most patients—generally, those under 70 years of age—it desirable to preserve the multifidus muscle, as this may assist with rehabilitation after a procedure.

131. Moreover, because the parallel and perpendicular approaches target the medial branches of the dorsal root that supplies the facet joint, two separate ablations above and below a facet joint are required. By instead targeting the facet joint capsule in the MSRFN technique, only a single ablation is required to achieve the same denervation objectives. The MSRFN technique is thus quicker and easier to perform, reduces radiation exposure to both the practitioner and patient, and can reduce the patient's discomfort.

IPR2024-01209
Avanos v. Stratus
Stratus Ex. 2001

IPR2024-01209
Avanos v. Stratus
Stratus Ex. 2052
Page 163 of 198

132. The MSRFN technique is also simpler because only a single fluoroscopic view (30 degrees ipsilateral oblique) is needed, whereas other techniques require two different views to confirm correct probe placement relative to bony landmarks. This use of only one fluoroscopic view further reduces radiation exposure.

133. The MSRFN technique also has safety hallmarks similar to those of the perpendicular approach. The RF needle can be inserted until contacting the capsule, which thus acts as an anatomical backstop. The practitioner thus can avoid risks of inserting the needle too deep or ablating too far associated with the parallel approach.

134. The MSRFN technique is not possible with traditional RF needle cannulae that do not have expandable tines due to the narrow prolate spheroid shape and small size of the lesions created thereby, which I have discussed previously. The MSRFN technique also is not possible with cooled RF systems, such as Avanos's COOLIEF* system, because the lesions created thereby are not the right shape and are oversized.

135. The MSRFN technique has gained significant popularity Australia. It is also becoming more widely adopted in other regions of the world, including the U.S.

136. In my current practice, I use the Nimbus Device to treat all patients who require facet-joint radiofrequency neurotomy. I treat approximately 70 percent of these patients (generally those under the age of 70) using the MSRFN technique, and I treat the remaining 30 percent using the perpendicular approach.

IPR2024-01209
Avanos v. Stratus
Stratus Ex. 2001

IPR2024-01209
Avanos v. Stratus
Stratus Ex. 2052
Page 164 of 198

VII. PERSON OF ORDINARY SKILL IN THE ART

137. As I described above, product development efforts in the RF neurotomy field were directed to the RF generators, rather than the RF neurotomy devices (that is, the needles and electrodes), in the years immediately before the Relevant Dates.

138. I believe that if an improved RF neurotomy device were to be developed as at the Relevant Dates, the process would begin with an interventional pain specialist, such as myself. This is because a detailed knowledge of the anatomy and physiology of pain pathways, and the sources and causes of different types of pain, as well as the existing RF neurotomy techniques, including the devices used to perform those techniques, would all have been essential to design an improved RF neurotomy device before the Relevant Dates.

139. Even with this detailed knowledge, however, I would not have been able to develop an improved RF neurotomy device entirely on my own. I believe this is also true of other interventional pain specialists. I believe assistance from a person or team with engineering expertise would be needed. I expect that the interventional pain specialist would have needed to explain to an engineer what was trying to be achieved with the improved device and would have relied on the engineer to help translate that into aspects of the design and development of the improved device.

140. I also believe it would not have been possible for an engineer to design and develop an improved RF neurotomy device without closely collaborating with an interventional pain specialist for at least the reasons noted above.

141. If I had been looking to develop an improved RF neurotomy device at the Relevant Dates, my starting point, and I expect the starting point of others practising RF neurotomy, would have been existing RF neurotomy devices.

IPR2024-01209
Avanos v. Stratus
Stratus Ex. 2001

IPR2024-01209
Avanos v. Stratus
Stratus Ex. 2052
Page 165 of 198

142. In my world, a POSITA would include a junior doctor, fellow, or a consultant pain specialist or neurosurgeon performing RF neurotomy procedures on patient with three months of experience with thermal ablation systems. I believe three months would be sufficient, as one becomes skilled in the art very quickly as a doctor. I would not altogether exclude engineers from the definition of a POSITA, but it is necessary to include physicians who actually use RF neurotomy devices.

143. In my experience, inventions in this space typically start with a doctor. Doctors are the ones who see the patients, who diagnose and treat the conditions, and who know the limitations of existing devices in practice.

144. In my experience, if a device fails to achieve a clinical outcome, a biomedical engineer would not know this without the assistance of a doctor. Biomedical engineers are not the ones who see the patients for follow up visits after procedures—that is the role of doctors. A doctor may, for example, see that a device has caused an issue with one or more patients and then consult with an engineer to gain possible insight into that issue. Based on information gained from the engineer, if any, the doctor might then cogitate on the matter and develop his own solutions to the issue.

145. I understand that Gabor B. Racz, William R. Fitz, and Bruce Lee, the only or first-named inventors of the Racz, Fitz, and Lee references, respectively, are all medical doctors. Specifically, Gabor B. Racz is a board-certified anaesthesiologist who served as the acting director of pain services at Texas Tech University Health Science Center in Lubbock, Texas; and Philip Finch (who is also an inventor of Racz) is an Australian pain physician. *See* Exibit Nos. 2021, 2022. Willaim R. Fitz is a pain physician in Ohio. *See* Exhibit No. 2023. And Bruce Lee is a board-certified gynaecologist in Southern California. *See* Exhibit No. 2024.

IPR2024-01209
Avanos v. Stratus
Stratus Ex. 2001

IPR2024-01209
Avanos v. Stratus
Stratus Ex. 2052
Page 166 of 198

146. The inventorship of Racz and Fitz is consistent with the qualifications that I deem necessary for a POSITA in the RF neurotomy space, as each of these RF neurotomy references was invented by pain medicine specialists.

147. The inventorship of Racz, Fitz, and Lee also demonstrates the lack of cross-pollination of RF neurotomy and other specialties, such as gynaecology, in which RF ablation is also employed. Whereas the RF neurotomy devices of Racz and Fitz were invented solely by pain medicine specialists, Lee's uterine fibroid ablation device was invented by a gynaecologist.

VIII. ALLEGED PRIOR ART

A. Racz Is Directed to RF Neurotomy

148. Racz discloses a "radio-frequency electrode cannula" into which an "electrical probe" is inserted. Ex. 1009 at 3:39-40, 60-63. Racz indicates its apparatus "for pain relief . . . delivers electrical stimulation pulses or high-frequency signals to the vicinity of a neural structure via an electrical needle or cannula." *Id.* at 1:7-9.

149. Racz's device bears similarities to the RF neurotomy devices I discussed in Section VI-B, *supra*. Indeed, in his "Background of the Invention" section, Racz discusses the "SMK Needle electrodes from Radionics," which I similarly described in my "History of RF Neurotomy" section above. *See id.* at 1:43-65.

150. A POSITA would conclude that the thrust of Racz's disclosure pertains to RF neurotomy.

IPR2024-01209
Avanos v. Stratus
Stratus Ex. 2052
Page 167 of 198
IPR2024-01209
Avanos v. Stratus
Stratus Ex. 2001

1. Racz's Curved Tip

151. The focus of Racz's disclosure is that straight RF neurotomy electrodes, such as the SMK Needle, are deficient and thus a permanently bent tip at the distal end of the cannula is a necessary improvement. *See id.* at 1:25-67; 2:1-43. In view of Racz's disparagement of such straight electrodes and Racz's insistence of the need for a "firmly curved tip needle electrode," it is my opinion that a POSITA would understand that (a) Racz's devices, and any variations thereof, require a permanently bent tip and (b) this permanently bent tip must have some degree of curvature—it cannot be a straight. *See id.* at 2:45-67; 3:1-15.

152. Thus, when Racz states that "[t]hose individuals skilled in the art will recognize that many variations of the electrode geometries depicted in FIGS. 1-3 are possible without departing from the invention. . . . [t]he shape and degree of tip curvature may vary widely," this means that variations of Racz's electrode geometries must have *at least some* curvature at the tip. *Id.* at 8:10-16.

153. A POSITA would understand that elimination of a curve from the tip of Racz's needle would effectively remove Racz's invention from Racz's needle. As reflected even in the very title of Racz, the invention of Racz is a "BENT TIP." *Id.* at [title].

154. Stated otherwise, a POSITA would not see elimination of *all* curvature from Racz's tip as an option when varying Racz's "electrode geometries" because this variation would constitute a wholesale departure from Racz's invention. *See id.* at 8:10-16.

IPR2024-01209
Avanos v. Stratus
Stratus Ex. 2001

IPR2024-01209
Avanos v. Stratus
Stratus Ex. 2052
Page 168 of 198

2. Racz's Gauges

155. Racz states that "[t]hose individuals skilled in the art will recognize that many variations of the electrode geometries depicted in FIGS. 1-3 are possible without departing from the invention. Various sized electrodes can be made, from extremely small gauges (e.g., 30 gauge) to much larger sizes (e.g., 10 gauge)." *Id.* at 8:10-15. Although I have mentioned it before, I again note that for gauge sizes, increasing gauge numbers correspond with decreasing sizes; decreasing gauge numbers correspond with increasing sizes.

156. To properly evaluate the foregoing passage of Racz, it is necessary to understand what a POSITA would know about RF neurotomy needles independent of Racz's disclosure, and it is also important to evaluate this passage in the proper context of Racz's own disclosure.

157. To the extent the IPR Petitions and Dr Tucker, whether in his declarations or deposition, allege that Racz's foregoing passage teaches that an RF neurotomy needle can be sized from 30 gauge on the small end to 10 gauge on the large end, I disagree.

158. Quite simply, RF neurotomy needles are 22 gauge through 16 gauge in size. RF neurotomy needles are most typically available in 22, 20, 18, and 16 gauges, although some RF neurotomy needles fall between these sizes.

159. Cannulae larger than 16 gauge (e.g., 10 gauge) or smaller than 22 gauge (e.g., 30 gauge) are not suitable for RF neurotomy because they:

(a) are not suitably navigable to target nerves; and

(b) pose too great a risk of harming patients.

IPR2024-01209
Avanos v. Stratus
Stratus Ex. 2001

IPR2024-01209
Avanos v. Stratus
Stratus Ex. 2052
Page 169 of 198

160. In the case of cannulae that are larger than 16 gauge (e.g., 10 gauge), the cannulae are:

(a) too stiff to navigate within the constraints of the relevant anatomy; and

(b) so large that they damage delicate anatomic structures through which they pass when being advanced to a target nerve.

For reference, a 10-gauge needle has a diameter larger than one tenth of an inch.

161. In the case of cannulae that are smaller than 22 gauge (e.g., 30 gauge), the cannulae are:

(a) insufficiently stiff to navigate predictably and consistently to target nerves, which are notoriously difficult to target even when using needles having an appropriate stiffness; and

(b) so delicate that they risk bending or breaking in manners that can damage tissue or, in the case of breaking, deleteriously leave a shard within the patient, which on top of any immediate negative effects, could additionally prevent the patient from undergoing future MRIs in ongoing care.

For reference, a 30-gauge needle has a diameter of about one hundredth of an inch.

162. Even in cordotomy procedures, in which a tiny needle is inserted into the spinal cord of a patient to create a miniscule lesion (e.g., 0.5 mm by 0.5 mm) with pinpoint precision, a 22-gauge needle may be used.

163. Thus, a POSITA would know, independent from Racz, that RF neurotomy needles cannot be as large as 10 gauge or as small as 30 gauge, and are instead sized only from 16 gauge to 22 gauge.

IPR2024-01209
Avanos v. Stratus
Stratus Ex. 2001

IPR2024-01209
Avanos v. Stratus
Stratus Ex. 2052
Page 170 of 198

164. Even Racz's own teachings would cause a POSITA to recognize that needle gauges larger than 16 gauge or smaller than 22 gauge would, in Racz's own phrasing, "depart[] from the invention" of Racz. *Id.* at 8:12-13.

165. Much of Racz's disclosure is directed to specific neurotomy procedures in which a bent tip can be beneficial. *See, e.g., id.* at 6:59-67; 7:1-25. Racz recognizes that for neurotomy procedures, the "cannulae . . . must be placed with accuracy and care to avoid injury to critical neural structures" and "avoidance of injury to delicate anatomic structures is of primary importance," in the regions and contexts of lumbar joints, sacroiliac joints, and nerve blocking of spinal roots. *Id.* at 6:26-29; 7:13-21. These are issues that would arise if an RF neurotomy needle were larger than 16 gauge.

166. Racz further recognizes that having too much flexibility is undesirable for neurotomy needles. "Such flexible off-axis electrodes have a limitation that there [sic] tips cannot penetrate tough tissue or encounter hard bone without being damaged or diverted." *Id.* at 2:34-37. These are issues that would arise if an RF neurotomy needle were smaller than 22 gauge.

167. Thus, a POSITA reading Racz as a whole and with experience-based appreciation of the concerns Racz mentions would understand that needle gauges larger than 16 gauge or smaller than 22 gauge would raise the concerns I note in the two paragraphs immediately above, respectively.

168. In summary, Racz does not teach or fairly suggest to a POSITA that its devices could be constructed with a cannula larger than 16 gauge or smaller than 22 gauge and still be suitable for use as an RF neurotomy needle.

IPR2024-01209
Avanos v. Stratus
Stratus Ex. 2001

IPR2024-01209
Avanos v. Stratus
Stratus Ex. 2052
Page 171 of 198

169. For completeness, I refer to my discussion of Dr Tucker's deposition in Section XI-A below, in which Dr Tucker misapplied a gauge size range from a different reference, Tullis, in a similar fashion.

B. Fitz Is Directed to RF Neurotomy

170. Fitz purports to be directed to "[i]mproved-coverage RF neurotomy instrumentation." Ex. 1011 at [abstract].

171. Fitz does not teach or suggest to a POSITA activation of its electrodes via an insertable probe. In this regard, Fitz only discloses that "[e]ach electrode has a proximal end configured for attachment to a source of energy." *Id.*

C. Lee Has Limited or No Relevance to Racz and Fitz

172. Lee is not concerned with RF neurotomy, whereas Fitz and Racz are. This is a significant difference. RF neurotomy is a particular special case of RF ablation with several notable differences.

173. First, RF neurotomy devices and the nerves they target are considerably smaller than most other RF ablation devices and the tissues they target. This has significant ramifications on the design of RF neurotomy devices as compared to other RF ablation devices. The space constraints of RF neurotomy devices sometimes precludes designs that may be possible only in larger devices.

174. While it can be desirable to increase the ablation volume for both RF neurotomy and non-neurotomy applications, that desire is animated by different considerations. In tumour ablation, for example, a larger ablation volume is desirable because complete ablation of the entire tumour is the clinical objective, even if that means some collateral damage to nearby tissue. Indeed, in cancerous tumour

IPR2024-01209
Avanos v. Stratus
Stratus Ex. 2001

IPR2024-01209
Avanos v. Stratus
Stratus Ex. 2052
Page 172 of 198

removal or treatment, including RF ablation, the clinicians and surgeons often refer to "margins" to excise or treat a tumour. That refers to extra tissue surrounding the tumour. In RF neurotomy, on the other hand, the reason for desiring increased ablation volume is to increase the likelihood that the relatively tiny nerve tissue targets are not missed during the ablation. Indeed, in RF neurotomy, it is almost uniformly undesirable to ablate beyond the target nerve in order to avoid damaging other nerve structures that can be located nearby (see, e.g., the discussion above).

175. The properties of tumour tissue and tissues ablated in RF neurotomies also differ in fundamental manners. For example, tumours (including uterine fibroids) are characterized by their vascularity—blood vessels carry blood to and from the tumour. During an ablation procedure, blood passing through the tumour carries heat away from the ablation site, thus requiring input of further energy. In spinal RF neurotomy procedures, however, there are no blood vessels in the target area that would take away energy as it is being applied.

176. As a further example, tissue of cancerous tumours may be less dense and more friable than surrounding tissue, which can yield impedance characteristics (e.g., low impedance) that vary from normal tissue, whereas tissue of uterine fibroids (another type of tumour) can be more dense than surrounding tissue with other varied impedance characteristics. In spinal RF neurotomy procedures, however, the densities and impedances are those of normal tissue.

177. Another significant difference is that the physicians who perform RF neurotomy procedures (pain-treatment specialists) are different specialists from the physicians who perform other RF ablation procedures, as I note above. The physicians in these different specialties live in different professional worlds, read different professional literature, attend different conferences, etc.

IPR2024-01209
Avanos v. Stratus
Stratus Ex. 2001

IPR2024-01209
Avanos v. Stratus
Stratus Ex. 2052
Page 173 of 198

178. Additionally, the frequency with which RF neurotomy procedures are performed is many times more often than all other RF ablation procedures. A pain-treatment specialist may perform numerous (perhaps more than a dozen) RF neurotomy procedures each day, whereas RF ablation of tumours, for example, is a relatively rare event. Moreover, most RF neurotomy patients must repeat the procedure periodically as nerve tissue regenerates.

179. This difference in procedure frequency and volume significantly impacts the design and construction of the RF ablation devices used for neurotomy as compared to other applications. For example, it can be quite valuable to have removable, reusable parts—like an RF probe—in an RF neurotomy device, whereas reusability is simply not a factor in the other RF ablation treatments because of their relative rarity.

180. A further difference between the neurotomy devices of Racz and Fitz and the tumour ablation device of Lee is apparent from Lee's inability to deliver anaesthetic to a target site. Both Racz and Fitz state anaesthetic delivery as an objective of their devices, but Lee does not—every device disclosed in Lee lacks the ability to deliver anaesthetic. RF neurotomy procedures require delivery of anaesthetic to a target nerve through the RF neurotomy needle before a nerve can be ablated. This is a crucial step, as many RF neurotomy procedures are conducted under sedation, rather than under general anaesthesia, and others do not even use sedation. In contrast, Lee's device would only be used when the patient is under general anaesthesia, so there would be no need to deliver anaesthetic to the patient when using this device.

181. It is my opinion that Lee has limited or no relevance to Racz and Fitz.

IPR2024-01209
Avanos v. Stratus
Stratus Ex. 2001

IPR2024-01209
Avanos v. Stratus
Stratus Ex. 2052
Page 174 of 198

D. Young '965 Has Limited or No Relevance to Racz and Fitz

182. Young '965 is directed to devices for treatment of tissue anomalies and cancers. Ex. 1012 at ¶ 0002. For example, Young '965 discusses difficulties encountered during ablation due to bloodflow through the target tissue. *Id.* at ¶ 0006. Young '965 is devoid of any disclosure regarding the ablation of nerves.

183. Like Lee, Young '965 also lacks the ability to deliver anaesthetic to a treatment site.

184. Young '965 thus is not concerned with RF neurotomy. For reasons such as those described above with respect to Lee, I see Young '965 as having limited or no relevance to Racz and Fitz.

185. Dr Tucker asserts that "a POSA would have recognized that Young '965's shaft (20) could also be adapted to deploy and retract Lee's filaments (22/1622) from Racz's device (e.g., the shaft (20) could be hollowed and dimensioned to accommodate Racz's RF probe (22/52))." Ex. 1031 at ¶ 227. I disagree.

186. I do not see any reason for a POSITA to hollow out Young '965's shaft so it can accommodate Racz's RF probe. Dr Tucker provides no reasoning as to why a POSITA would be motivated to do so. Moreover, there are significant reasons that a POSITA would be dissuaded from doing this.

187. As just one example, Racz discloses that the distal tip (56) of its RF probe (52) includes a temperature sensor. Ex. 1009 at 5:28-29. The inclusion of a temperature sensor at the distal tip of an RF probe is a standard practice. The purpose of the temperature sensor is to monitor the temperature at the ablation zone during ablation. Accordingly, it is desirable for the temperature sensor to be as close as

possible to the ablation zone. It is also desirable for there to be good thermal conductivity from the ablation zone to the temperature sensor to permit the temperature sensor to obtain accurate information regarding thermal conditions in the ablation zone.

188. If Young '965 were to be redesigned in the manner proposed by Dr Tucker, such that "the shaft (20) . . . [were to] accommodate Racz's RF probe (22/52)," Racz's temperature sensor would be positioned at the distal tip of Young '965's shaft (20), as shown below in the annotated version of Young '965's Figure 6. Ex. 1031 at ¶ 227.

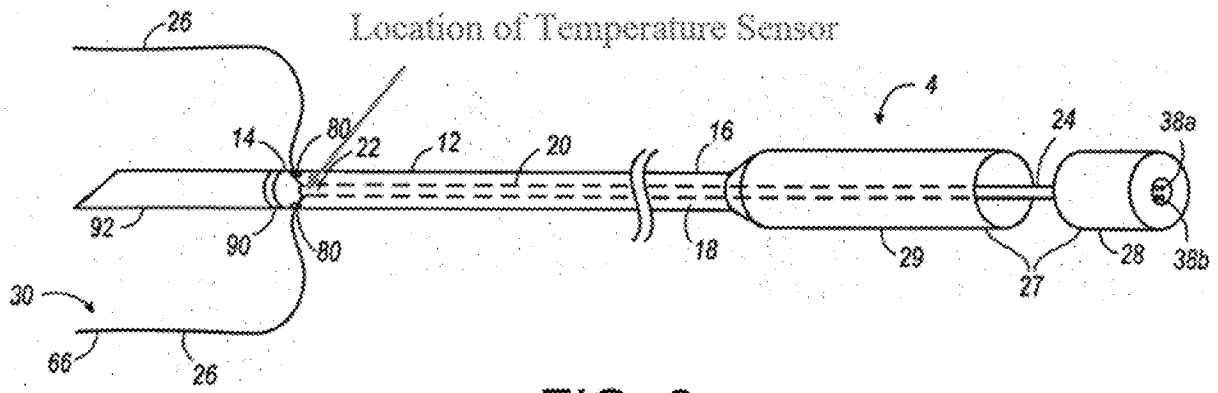

FIG. 6

189. The location of the temperature sensor in Young '965's modified device would not be suitable for RF neurotomy procedures. The temperature sensor would be far from the ablation zone. Moreover, it does not appear that there would be good thermal conductivity from (a) the distal end portion of the cannula (16) that would be positioned within the ablation zone to (b) the temperature sensor.

IPR2024-01209
Avanos v. Stratus
Stratus Ex. 2001
IPR2024-01209
Avanos v. Stratus
Stratus Ex. 2052
Page 176 of 198

E. Scheibe Has Limited or No Relevance to Racz and Fitz

190. Scheibe is directed to a deflectable catheter assembly and is not concerned with RF neurotomy. Ex. 1013 at [abstract]. I see this reference as having limited or no relevance to Racz, Fitz, or Lee.

191. I note that the IPR Petitions and the Tucker Declarations repeatedly cite to the following passage from Scheibe, although they only quote the final six words thereof:

> Although the use of the implantable device has been described for use as a lead in, for example, a cardiac stimulation system, the implantable device could as well be applied to other types of body stimulating systems.

See, e.g., IPR2024-01209, Paper 1 at p. 74 and Ex. 1031 at ¶¶ 233, 237 (each quoting Ex. 1013 at ¶ 0037). It appears that the IPR Petitions and the Tucker Declarations rely on this passage to demonstrate that a POSITA would naturally see that Scheibe's teachings are relevant to other "stimulating systems," such as those of Racz, Fitz, and Lee. *See id.* This is incorrect.

192. A POSITA would immediately recognize that Scheibe's quoted passage does not correspond with the rest of Scheibe's teachings. Deflectable catheter assemblies are clearly not "implantable device[s]" that can be used as leads in "cardiac stimulation system[s]." Ex. 1013 at ¶ 0037

193. Regardless, a POSITA would not consider either deflectable catheter assemblies or leads for cardiac stimulation systems as being relevant to Racz, Fitz, or Lee.

IPR2024-01209
Avanos v. Stratus
Stratus Ex. 2052
Page 177 of 198
IPR2024-01209
Avanos v. Stratus
Stratus Ex. 2001

194. Moreover, I do not believe that a POSITA would find a rotational actuator mechanism that is intended to create tension on a "*pull*wire" that remains *fixed within* a distal end of a flexible catheter sheath to deflect the sheath, as taught by Scheibe, as being reasonably pertinent to the objective of *pushing* tines *out of* a distal end of a stiff cannula. *See* Ex. 1013 at ¶¶ 16, 17, 26. These are nearly antithetical objectives.

IX. STRATUS PATENTS

195. The following statement, or one similar thereto, appears near the beginning of each Stratus Patent:

> The present invention is directed toward improved methods, systems, and related apparatuses for performing thermal ablation in general, and in particular, improved methods, systems and related apparatuses for performing RF neurotomy, specifically in the region of the spine of a patient.

Ex. 1002 at 1:58-62; *see also* Ex. 1001 at 1:56-58.

196. The '688 and '664 Patents further state that:

> RF neurotomy uses RF energy to cauterize a target nerve to disrupt the ability of the nerve to transmit pain signals to the brain. Known RF neurotomy methods typically use a single RF probe generating a generally oval or oblate spheroid lesion. The RF probe is positioned in an attempt to include the target nerve within the oval or oblate spheroid lesion. In various procedures, access to a target nerve may be limited (e.g., limited to a restricted angular range), thereby raising significant

IPR2024-01209
Avanos v. Stratus
Stratus Ex. 2001

IPR2024-01209
Avanos v. Stratus
Stratus Ex. 2052
Page 178 of 198

> challenges to medical personnel to create sufficient lesions to provide optimal clinical outcomes. Additionally, anatomical variations of the nerve location relative to anatomical landmarks provide additional challenges.

Ex. 1002 at 1:42-54.

197. The limitations or challenges described in this passage were recognised limitations or challenges in the RF neurotomy field before the Relevant Dates. As I stated above, to successfully capture the target nerve in the lesion required comprehensive knowledge of the topography of the target nerve tissues, as well as surgical precision, and the RF neurotomy procedures could fail if the electrode was not placed optimally near the target nerve or if anatomic variations were not effectively incorporated into the lesion.

198. The Stratus Patents each include the following statement, or one similar thereto:

> In the following description, the invention is set forth in the context of apparatus and methods for performing RF ablation. More particularly, the systems and methods may be used to perform RF neurotomy to ablate portions of target nerves. Even more particularly, the systems and methods may be used to perform spinal RF neurotomy to ablate portions of target nerves along the spine of a patient to relieve pain. For example, embodiments of methods and apparatuses described herein relate to lumbar RF neurotomy to denervate a facet joint between the L4 and L5 lumbar vertebrae. Denervation is achieved by application of RF energy to a portion of a medial branch nerve to ablate or cauterize a portion of the nerve, thus interrupting the ability of the nerve to

> transmit signals to the central nervous system. In another example, embodiments described herein relate to sacroiliac joint RF neurotomy.

Ex. 1002 at 4:18-34; *see also* Ex. 1001 at 8:40-55.

199. In my opinion, including based upon the above passage, the Stratus Patents are directed to the field of RF neurotomy, and particularly spinal RF neurotomy, and it describes new devices and methods for performing RF neurotomy. I do, and did before the Relevant Dates, regularly perform RF neurotomy to denervate facet joints between the L4 and L5 lumbar vertebrae, as well as sacroiliac joint RF neurotomy.

200. The limitation of the single needle technology described in the above passage was a recognised limitation in the RF neurotomy field before the Relevant Dates. As I state above, it was known before the Relevant Dates that there was minimal lesion formation distally beyond the electrode tip, with a circumferential lesion produced around the electrode tip. The Stratus Patents state that the invention overcomes that obstacle by employing the use of multiple filaments to provide additional conduits for RF energy and to allow adjustment of lesion geometry and size (see, for example, column 3, lines 9-19 of the `688 Patent).

201. The Stratus Patents describe a number of advantages provided by the invention described therein, which I have experienced as a result of using the Nimbus Device, including that it enables the needle to be inserted into a patient at a more desirable angle than would be required when using a needle without offset lesion capabilities (see, for example, column 22, lines 9-27 of the `688 Patent), and that it may be used to ablate a larger target area without the need to reposition the needle (for example, without withdrawing the needle and reinserting it), which may result in reduced patient trauma (see, for example, column 24, line 60 to column 25,

IPR2024-01209
Avanos v. Stratus
Stratus Ex. 2001
IPR2024-01209
Avanos v. Stratus
Stratus Ex. 2052
Page 180 of 198

line 8 of the '688 Patent). As I state above, the Nimbus Device allows interventional pain specialists to use a simplified technique to reach the target nerve, and also produces more optimally shaped lesions to capture target nerves in the facet joints and sacroiliac joints, with fewer heat cycles and with less heat damage to surrounding tissues.

202. The devices used in the RF neurotomy field as at the Relevant Dates did not have both a removeable RF probe and deployable and retractable filaments.

X. RESPONSE TO DECLARATION OF DR TUCKER

203. I comment here on only a few of the items discussed in Dr Tucker's declaration with which I disagree. While further points of disagreement should be apparent from other sections of this declaration, I do not necessarily address every point of disagreement.

204. Initially, I note that Dr Tucker is a pathologist who has never performed an RF neurotomy procedure on a live human patient. Ex. 2020 at 9:5-6; 10:3-18; 12:16-20.

205. I further note that Dr Tucker has no personal knowledge of the size of RF neurotomy needles. *Id.* at 142:3 to 146:16. Dr Tucker admits that he would need to defer to the understanding of physicians who actually perform RF neurotomy procedures to determine what sizes are appropriate for RF neurotomy needles. *See id.* at 142:15-21.

206. I do not see anything in the Tucker Declarations, Dr Tucker's *curriculum vitae*, or Dr Tucker's Deposition to suggest that Dr Tucker has any meaningful experience with the performance of RF neurotomy procedures using

IPR2024-01209
Avanos v. Stratus
Stratus Ex. 2001

IPR2024-01209
Avanos v. Stratus
Stratus Ex. 2052
Page 181 of 198

RF neurotomy needles. As I consider such experience indispensable for determining what a POSITA would have known as at the Relevant Dates with respect to RF neurotomy needles, I disagree with Dr Tucker's conclusory statements of what would have been obvious to a POSITA.

207. For example, I disagree with Dr Tucker's unsupported conclusion that "Racz's modified device" illustrated in his declarations (reproduced below), to the extent it is manufacturable, could function as a "radiofrequency neurotomy needle."

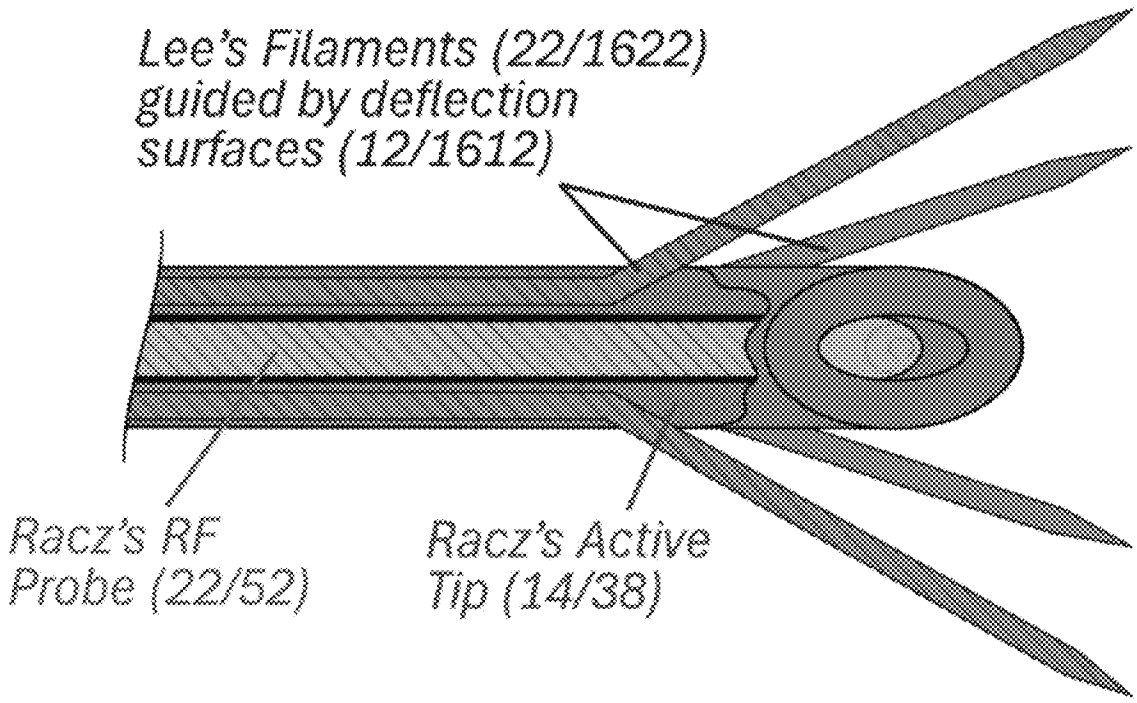

208. I also disagree with Dr Tucker's unsupported statements that "Racz's modified device" would have been obvious to a POSITA as at the Relevant Dates.

209. There are many details of "Racz's modified device" that I do not understand from Dr Tucker's description of this device. For example, I cannot determine whether the tip illustrated above is supposed to be curved or straight. I assume that it must be curved because the red portion is identified in the image above

IPR2024-01209
Avanos v. Stratus
Stratus Ex. 2001

IPR2024-01209
Avanos v. Stratus
Stratus Ex. 2052
Page 182 of 198

as "Racz's Active Tip," and Racz disclosed that its tip must be curved (as I have discussed previously). But the tip appears to be illustrated in a straight configuration, which is contrary to Racz's teachings.

210. As a further example, Dr Tucker indicates that Racz's electrode cannula, as incorporated into "Racz's modified device," is a "radiofrequency neurotomy needle." Ex. 1031 at 91, *see also id.* at 99-111. From this, I must assume that the cannula of Racz's modified device is sized between 16 gauge and 22 gauge. But I am unclear as to how channels could be formed in the sidewall of such a small cannula to receive the blue components identified in the image above as "Lee's Filaments guided by deflection surfaces" (which I identify hereafter as "Lee's Filaments").

211. And even assuming that "Lee's Filaments" could be arranged within the sidewall as illustrated, I am unclear as to what mechanism would be used to advance and retract these components through the sidewall of "Racz's Active Tip."

212. Despite these and other confusing aspects of Racz's modified device, it is my understanding that "Lee's Filaments" are meant to fit within channels in the sidewall of a needle body sized between 16 gauge and 22 gauge, as depicted in Dr Tucker's illustration.

213. While I do not understand Dr Tucker's "second example," I believe it would at least have the same size needle tip as the "first example," and thus would also be between 16 gauge and 22 gauge with channels running through its sidewall for "Lee's Filaments." *See id.* at 86-89.

214. With respect the foregoing assumptions regarding "Racz's modified device," at the scales involved in RF neurotomy, my initial impression is that such a

IPR2024-01209
Avanos v. Stratus
Stratus Ex. 2001

IPR2024-01209
Avanos v. Stratus
Stratus Ex. 2052
Page 183 of 198

device, if manufacturable, would be extremely and impractically costly. I have never seen a device similar to what is illustrated in which deployable tines are advanced through channels within the thin sidewall of a needle.

215. Moreover, I and other pain doctors would have serious concerns regarding the performance characteristics of tines that are sufficiently small to pass through channels within the sidewall of a 16- to 22-gauge needle. Tines having such a small cross section present significant risks of being damaged or deflected. A POSITA would also understand that they would be incapable of generating a desirable ablation volume. I address each of these clear drawbacks in turn below.

216. But first, I again note that Racz itself warns against the very arrangement depicted in "Racz's modified device" for some of the reasons I will discuss hereafter. Specifically, Racz warns against advancing flexible elements from a cannula in the types of environments encountered in RF neurotomy procedures:

> Those electrodes both have flexible, curved tips, which extend from the straight shaft of an enclosing cannula to extend off-axis in an arc. This is useful in certain neural regions such as the trigeminal ganglion or the pituitary gland, or any area where the target region is very soft or fluid filled. Such flexible off-axis electrodes have a limitation that there [sic] tips cannot penetrate tough tissue or encounter hard bone without being damaged or diverted.

1009 at 2:30-38. Because "Lee's Filaments" would have extremely small cross sections in Racz's modified device, they would possess the very properties that Racz discourages for RF neurotomy needles. That is, they would be "flexible" and incapable of "penetrat[ing] through tissue or encounter[ing] hard bone without being

IPR2024-01209
Avanos v. Stratus
Stratus Ex. 2001
IPR2024-01209
Avanos v. Stratus
Stratus Ex. 2052
Page 184 of 198

damaged or diverted" as they "extend from the straight shaft of an enclosing cannula to extend off-axis." *Id.*

217. A POSITA would understand "Lee's Filaments" in "Racz's modified device" would be so small as to face significant risks of breakage. Dr Tucker even suggests that these filaments could be as small as "0.2mm (wide) and 0.05mm (thick)." Ex. 1031 at 88, 143. This is extremely small (just 50 microns thick!) and not practical in real-world applications. I do not view filaments that are this thin as translating to clinical human safety.

218. In my experience, practitioners would not use a device that presented any possible risk of breaking off within a patient, particularly in the vicinity of nerves. The risk of such breakage is heightened near bone, which is where spinal and other forms of RF neurotomy procedures are performed.

219. "Lee's Filaments" in "Racz's modified device" also would have a high risk of bending while passing through tissue or potentially encountering bone, likely in unpredictable manners. Such uncontrolled bending is unacceptable for neurotomy, where precisely targeting miniscule targets is necessary, as I have previously discussed. With a device such as "Racz's modified device" illustrated above, the configuration of the deployed tines would vary in unpredictable and potentially unrepeatable manners, as they would be influenced differently by the tissue through which they pass from one patient to the next. The tines of an RF neurotomy needle such as disclosed in the Stratus Patents must be deployed in predictable, repeatable, and reliable way to ensure proper targeting of a nerve.

220. As a further complication, bending of such small tines could prevent their retraction after use. The narrow entrances of the side ports into which "Lee's Filaments" must be withdrawn appear to heighten this risk.

IPR2024-01209
Avanos v. Stratus
Stratus Ex. 2001

IPR2024-01209
Avanos v. Stratus
Stratus Ex. 2052
Page 185 of 198

221. If "Lee's Filaments" were unable to retract into the needle tip, this would damage delicate structures of the patient during retraction of the full device from the patient, as the un-retracted tine or tines (depending on whether they are individually or collectively retractable) would still be sticking radially outward by some amount. This scenario could also increase the likelihood of one or more of the tines breaking off within the patient.

222. A further complication that can arise from "Lee's Filaments" being too flexible due to their tiny profile is a tendency of the tines to spread further apart from one another than intended. To achieve an effective ablation volume that can target nerves in the effective manners discussed in other sections above, it is desirable for the individual ablation patterns from each filament to have some degree of overlap or confluence. Such overlap can be appreciated from the ablation volume of the Nimbus Device depicted in Figure 8 above. If the filaments are too far from one another, their ablation coverages will not overlap, leaving gaps in the ablation volume. The device would thus be unable to provide a predictable and repeatable ablation patterns upon which a practitioner could rely.

223. Even in the absence of undesired bending, however, "Lee's Filaments" would still be unsuitable for expanding the ablation volume of "Racz's Active Tip" because they are so thin. Dr Tucker's proposed design thus causes "Lee's Electrodes" to be so small that they are unsuitable for their stated purpose.

224. It is difficult to achieve meaningful ablation volumes from electrodes that are 22 gauge or smaller. Even if it were to be assumed that the cannula size of Racz's modified device is 16 gauge, thus making the device as large as possible while still qualifying as an RF neurotomy needle, "Lee's Filaments" would necessarily be much smaller than 22 gauge in order to fit within the needle's

IPR2024-01209
Avanos v. Stratus
Stratus Ex. 2001

IPR2024-01209
Avanos v. Stratus
Stratus Ex. 2052
Page 186 of 198

sidewall. "Lee's Filaments" thus would be incapable of providing ablation volumes that could meaningfully expand the ablation volume of "Racz's Active Tip." This situation would worsen if smaller cannula gauges were used for "Racz's modified device."

225. Thus, "Lee's Filaments" ultimately would fail to provide an expanded ablation volume that would improve upon the performance of Racz's unaltered device. This undercuts the very motivation that Dr Tucker relies upon for combining the teachings of Racz, Fitz, and Lee. *See* Ex. 1031 at 78-81.

226. In sum, the tiny, flexible tines that would be required for "Racz's modified device" make this device unsuitable for RF neurotomy: the tines could break, could bend in unpredictable manners, and in any event, would be so small that they would fail to achieve their stated purpose of expanding an ablation volume.

227. In view of the foregoing, I strongly disagree with Dr Tucker's unsupported assertion that "Racz's modified device" could function as a "radiofrequency neurotomy needle." Ex. 1031 at 91, *see also id.* at 99-111.

228. In view of the foregoing, I also strongly disagree with Dr Tucker's assertion that a POSITA would have found it obvious to combine the teachings of Racz, Fitz, and Lee to create "Racz's modified device"—no POSITA who has real-world experience performing RF neurotomy procedures on actual human patients would have ever arrived at such a device.

XI. RESPONSE TO DEPOSITION OF DR TUCKER

229. I comment here on only a few of the items discussed in Dr Tucker's deposition with which I disagree. While further points of disagreement should be

IPR2024-01209
Avanos v. Stratus
Stratus Ex. 2001

IPR2024-01209
Avanos v. Stratus
Stratus Ex. 2052
Page 187 of 198

apparent from other sections of the present declaration, I do not necessarily address every point of disagreement.

A. Cannula Size for RF Neurotomy Needles

230. In his deposition, Dr Tucker confirmed that he did not personally know what sizes are appropriate for RF neurotomy needles, and thus would need to rely on more knowledgeable physicians or patent literature to determine this information. *See* Ex. 2020 at 142:3 to 146:16.

231. In discussing paragraph 46 of his declaration (Exhibit 1031), Dr Tucker repeatedly indicated that one of the "guys" (patentees) he listed in this paragraph had identified 12 gauge is an appropriate upper limit for the size for RF neurotomy needles. *Id.* at 133:5; 143:4-18; 144:8-10; 145:9-20. This is clearly wrong.

232. In his testimony, Dr Tucker must have been referencing his following quotation in paragraph 46 of his declaration:

> Ex-1022, 7:32 (cannulas used can range 'from 12 G[auge] to a smaller 26 G[auge]')."

Ex. 1031 at ¶ 46 (quoting Ex. 1022, 7:32).

233. But this quotation omits crucial information. The full quote from Exhibit 22 (U.S. Patent No. 7,918,852 of Tullis et al.) is as follows:

> Other cannulae of this invention, both monopolar and bipolar, may have outer diameters ranging from 12 G[auge] to a smaller diameter 26 G[auge]. For electrode assemblies 24 used ***for <u>denervation procedures</u>, the diameter of the cannula 28***, which is the diameter of

IPR2024-01209
Avanos v. Stratus
Stratus Ex. 2001

IPR2024-01209
Avanos v. Stratus
Stratus Ex. 2052
Page 188 of 198

> the supply electrode assembly 36, ***is preferably 16 G[auge] or more and more preferably 18 G[auge] or more***.

Ex. 1022 at 7:30-36 (emphases added).

234. Thus, even the patent literature that Dr Tucker attempted to used in his declaration and deposition testimony to identify unreasonably large sizes for RF neurotomy needles instead confirms the true range that I have I identified throughout this declaration: 16 gauge is the maximum acceptable size for neurotomy needles.

235. This episode from Dr Tucker's deposition is just one among many demonstrating that Dr Tucker does not possess the necessary understanding of RF neurotomy procedures to credibly comment on what would or would not have been obvious to an appropriately defined POSITA.

236. I reiterate that a POSITA would independently know that RF neurotomy needles range in size from 16 gauge to 22 gauge for the reasons previously discussed.

B. Scope of the Term "RF Neurotomy"

237. In his deposition, Dr Tucker admitted to being confused as to whether the term "RF neurotomy" applies only to spinal nerves or whether it also applies to "peripheral nerves." *See* Ex. 2020 at 196:5-17; 198:6-17. Ultimately, he concluded that RF neurotomy applies to both spinal nerves and peripheral nerves. *Id.*

238. Dr Tucker's confusion regarding the term "RF neurotomy" may stem from his inexperience with RF neurotomy procedures, as he has never performed an RF neurotomy on a human patient. *Id.* at 12:16-20.

IPR2024-01209
Avanos v. Stratus
Stratus Ex. 2001

IPR2024-01209
Avanos v. Stratus
Stratus Ex. 2052
Page 189 of 198

239. Regardless, application of the term "RF neurotomy" solely to spinal nerves would be understandable, as I estimate that more than 99.5 percent of all RF neurotomy procedures are performed on spinal nerves, such as lumbar, thoracic, and cervical medial branch nerves.

240. Whether RF neurotomy applies solely to spinal nerves or additionally to peripheral nerves makes little difference in the present case, however. RF neurotomy needles used for performing neurotomies on peripheral nerves, whether via thermal ablation or via pulsed RF, are similar to other RF neurotomy needles described above with respect to spinal procedures. For example, in both instances, the RF neurotomy needles are sized from 16 gauge to 22 gauge.

C. Dyes Do Not Make Nerves Visible Under Fluoroscopy

241. In his deposition, Dr Tucker suggested that a practitioner could avoid inadvertently deploying a pointed stylet into a non-targeted nerve near the spine during a RF neurotomy procedure because it is possible to use certain dyes that render nerves visible under X-rays, such as used in fluoroscopy. Ex. 2020 at 58:9 to 60:7.

242. This is false. I am unaware of any dye that renders nerves visible under X-rays.

243. While it is possible to inject dye into the spine to identify an anatomical tract within which a nerve will be located, such as a hole in a bone, this does not make the nerve itself visible. The dye only assists in highlighting the tract.

244. There is also a procedure that used to be employed more than it is today called myelogram fluoroscopy. This procedure involves the injection of a large amount of dye (e.g., 50 mL) into the fluid around the spinal cord. This can show the

IPR2024-01209
Avanos v. Stratus
Stratus Ex. 2001

IPR2024-01209
Avanos v. Stratus
Stratus Ex. 2052
Page 190 of 198

anatomical outline of the spinal cord. This procedure is not used in RF neurotomy and, in any event, became a relatively rare alternative to MRI scans after the advent of MRI machines.

245. Importantly, practitioners who are experienced in RF neurotomy would not inject dye near a nerve during an RF neurotomy procedure. This would be counterproductive, as the dye would obscure the anatomical markers (e.g., bones) in the very region where the practitioner is trying to accurately position the needle tip based on those very anatomical makers. Practitioners wish to see the bony anatomy in an unobscured fashion when using fluoroscopy so they may reference the contours of that bony anatomy to approximate the positions of the nerves, which are not visible under fluoroscopy.

IPR2024-01209
Avanos v. Stratus
Stratus Ex. 2001

IPR2024-01209
Avanos v. Stratus
Stratus Ex. 2052
Page 191 of 198

XII. CONCLUSION

246. I declare that all statements made herein of my own knowledge are true and that all statements made on information and belief are believed to be true. I further declare that these statements were made with the knowledge that willful false statement and the like so made are punishable by fine or imprisonment, or both under Section 1001 of the Title 18 of the United States Code, and that such willful false statements may jeopardize the validity or enforceability of the Stratus Patent.

247. I agree to be reasonably available for cross-examination regarding the content of this declaration in the United States during the time allotted for such cross-examination in these cases.

Executed this 21st day of May 2025.

Marc A Russo

Marc Andrew Russo

IPR2024-01209
Avanos v. Stratus
Stratus Ex. 2001

IPR2024-01209
Avanos v. Stratus
Stratus Ex. 2052
Page 192 of 198

UNITED STATES
PATENT AND TRADEMARK OFFICE

P.O. Box 1450
Alexandria, VA 22313 - 1450
www.uspto.gov

ELECTRONIC ACKNOWLEDGEMENT RECEIPT

APPLICATION #	RECEIPT DATE / TIME	ATTORNEY DOCKET #
19/664,743	**04/30/2026 07:02:27 PM Z ET**	**NBUS.001C1RE1**

Title of Invention

METHODS AND SYSTEMS FOR SPINAL RADIO FREQUENCY NEUROTOMY

Application Information

APPLICATION TYPE	Utility - Reissue	PATENT #	10736688
CONFIRMATION #	5232	FILED BY	Matthew Phillips
PATENT CENTER #	75728742	FILING DATE	-
CUSTOMER #	148468	FIRST NAMED INVENTOR	Robert E. Wright
CORRESPONDENCE ADDRESS	-	AUTHORIZED BY	-

Documents

TOTAL DOCUMENTS: 16

DOCUMENT		PAGES	DESCRIPTION	SIZE (KB)
688-Reissue-373-Statement.pdf		2	Assignee showing of ownership per 37 CFR 3.73	200 KB
688-Reissue-Transm-Form.pdf		1	Transmittal Reissue Application	331 KB
688-Reissue-Assignee-Consent-Signed-FLAT.pdf		1	Consent of Assignee accompanying the declaration	667 KB
688-Reissue-Prelim-Amendment.pdf		26	-	949 KB
688-Reissue-Prelim-Amendment-A.PE.pdf	(1-1)	1	Preliminary Amendment	91 KB
688-Reissue-Prelim-Amendment-SPEC.pdf	(2-2)	1	Specification	51 KB

688-Reissue-Prelim-Amendment-CLM.pdf	(3-20)	18	Claims	126 KB
688-Reissue-Prelim-Amendment-REM.pdf	(21-26)	6	Applicant Arguments/Remarks Made in an Amendment	770 KB
Russo-Rule132-Decl-April-2026-FLAT.pdf		3	Reissue Oath or Declaration	1473 KB
688-Reissue-POA Signed BB 04.27.2026-FLAT.pdf		2	Power of Attorney	1513 KB
688-Reissue-Assignee-Decl-Signed-FLAT.pdf		2	Reissue Oath or Declaration	1628 KB
688-Reissue-ADS.pdf		9	Application Data Sheet	1814 KB
688-Patent-FLAT.pdf		45	-	13538 KB
688-Patent-FLAT-SPEC.pdf	(1-7)	7	Specification	2625 KB
688-Patent-FLAT-DRW.pdf	(8-26)	19	Drawings-only black and white line drawings	1990 KB
688-Patent-FLAT-SPEC.pdf	(27-41)	15	Specification	7545 KB
688-Patent-FLAT-CLM.pdf	(42-45)	4	Claims	1582 KB
Finch-Rule132-Decl-April-2026-With-Attachments-A-C-FLAT.pdf		103	Reissue Oath or Declaration	24582 KB

Digest

DOCUMENT	MESSAGE DIGEST(SHA-512)
688-Reissue-373-Statement.pdf	402B9EC929D8EE78372CA28F9AA767186A36C31E5EBEEED4B8B5493059C80A176C1F9F925DB4F8CD5C233C62E9CD1456C7924C4264BDA669B3EC45E22CBD043A
688-Reissue-Transm-Form.pdf	F574771ECF1D9408572B4FA78E4A0E4AB0E087D41B15CAD8F58ACEC777DBA06E22F48D3F85C9A87EE3989EBB17FD0D0F2B69941016F4E6C36D8A60AA1E760412
688-Reissue-Assignee-Consent-Signed-FLAT.pdf	2470A58A1173AFFBAE8EEDFAB86BEB9571A270FB7239E2C33DF5EDABEA87054525BF08784636FE83F4E3E3397D0C71BCFA82F59ADF72B9AEDB5C42003B878EEF
688-Reissue-Prelim-Amendment.pdf	20D53C97851B33EE09F55BE3B6566CBEE51E55A046DF056048129C1C2D7B6F4D733478877CA41907BCA1897E13DFF07ECE955364D3ABDEC24FCEF8B2BB2C82EC
688-Reissue-Prelim-	5402F011D3A02F980FAF5B4334530717B1E10EDF06307E8B56

Amendment-A.PE.pdf	C176F446B13EA21995E7A526356A017FF97856E831E293001AEEB00FB4ACD553567293C3C2F404
688-Reissue-Prelim-Amendment-SPEC.pdf	076A519C0299FF14A33C78B4C5BF1CAAB4731F76CF76CBC680A32FE056D9B432EE967F02272A75A270DC3893436E6F57E1330477EF65CA9A2479BC93BBB4ED24
688-Reissue-Prelim-Amendment-CLM.pdf	CD2F07A1CFC80B1D77E159E0D30BD08DDB12F64C59A7282F3ACC2DBB6630D40894F104EE4C745A38EF113CCD9B5A1E211CB934A5DAB66E751E57C0EA08793079
688-Reissue-Prelim-Amendment-REM.pdf	2A9F7DB6E021556758AB0AB01EBB0CA33D251B9024D9B38145AB061A458F4C7D49468F8A153839786894F471675788156DBC2BECDAD2F96D32AE3FC4333B561D
Russo-Rule132-Decl-April-2026-FLAT.pdf	7C8DE893342C61C6DB674B61337777DF356DD539F322C9226E3FD1976B893D924ADB9D283FD3A7637C8849543DC386362CCBEFEE000FAB1A0C99D7B729C8138B
688-Reissue-POA Signed BB 04.27.2026-FLAT.pdf	816C287B11FE0F3B5DE57224D0CD7E46D818A55F786F5AB08EE80F4014817FD3DF31E784DB39B564AAD56B25955AF72935B502056243C1D242FAB988A241D967
688-Reissue-Assignee-Decl-Signed-FLAT.pdf	0F60CD2AF197736D6E1A3341957D44BE69402056FDA933F4946876F6DB5EEAF80EF52109EB158A0BA7542A6806AC53FD4271853C04B90C377600C1A76AEEBEB6
688-Reissue-ADS.pdf	35C7AF4C555C5486379C0131C91BC6E10D807109931143539A3322DA7A8B343E8C3595163DE8C2CCD471320CA8A1CC60851675872A9DE9773340AE61123BFEE8
688-Patent-FLAT.pdf	616367B2B97170FA1A2A8F630A52F13A63391A4D0E68DBE883430AF897AD7732CB5BE464DB624BE649233A4A57D636B0DC3FE22E4659AAE45A9F858AB47DBC09
688-Patent-FLAT-SPEC.pdf	B1177F573CBEF389518ED71A018ED3A8FDCFFB2DBC0C8FC67866C9A1DB517B0C6D6417FB59503A7FD914EEF2EFD93E5E99D0B93788D1E6EBA132CBA7D9F365F1
688-Patent-FLAT-DRW.pdf	02B86BE13A114EDDC8806C66AABFD2CA02C1722C86329EFCFC674280A3A198B848E3FF80E9355FFAC743A65E1F1AF4BF89DF8938D5A08B4C884EC50D41AF3F2C
688-Patent-FLAT-SPEC.pdf	1D122772AA539BF123C84B0BDC970781245FCA62C414AB81E8B55233401C81188976E4F1F4AF5980EAE3F491C8CD58C70360E093A8AB8E26C223C8EE4100D640
688-Patent-FLAT-CLM.pdf	F11F6E0AEF6217CE182327870089A2C4F39E2F316F6CFD5EA697CAE374D2AFE08B28E38E03591385C19E949960F44D5B81EA9B92E8F5BAD8361CECAF7878FF35
Finch-Rule132-Decl-April-2026-With-Attachments-A-C-FLAT.pdf	CA449BD666A279DD6C23C994076436EB6C342789A728F70CC2127CF1C6CDFD5C1D0C67F85B6F74C232A9C2A19C0B71CDF538B0E3815CF66ABB0C10814E26603B

by the applicant, and including page counts, where applicable. It serves as evidence of receipt similar to a Post Card, as described in MPEP 503.

New Applications Under 35 U.S.C. 111

If a new application is being filed and the application includes the necessary components for filing date (see 37 CFR 1.53(b)-(d) and MPEP 506), a Filing Receipt (37 CFR 1.54) will be issued in due course and the date shown on this Acknowledgement Receipt will establish the filing date of the application

National Stage of an International Application under 35 U.S.C. 371

If a timely submission to enter the national stage of an international application is compliant with the conditions of 35 U.S.C. 371 and other applicable requirements a Form PCT/DO/EO/903 indicating acceptance of the application as a national stage submission under 35 U.S.C. 371 will be issued in addition to the Filing Receipt, in due course.

New International Application Filed with the USPTO as a Receiving Office

If a new international application is being filed and the international application includes the necessary components for an international filing date (see PCT Article 11 and MPEP 1810), a Notification of the International Application Number and of the International Filing Date (Form PCT/RO/105) will be issued in due course, subject to prescriptions concerning national security, and the date shown on this Acknowledgement Receipt will establish the international filing date of the application.

UNITED STATES
PATENT AND TRADEMARK OFFICE

P.O. Box 1450
Alexandria, VA 22313 - 1450
www.uspto.gov

ELECTRONIC PAYMENT RECEIPT

APPLICATION #	RECEIPT DATE / TIME	ATTORNEY DOCKET #
19/664,743	**04/30/2026 07:02:27 PM Z ET**	**NBUS.001C1RE1**

Title of Invention

METHODS AND SYSTEMS FOR SPINAL RADIO FREQUENCY NEUROTOMY

Application Information

APPLICATION TYPE	Utility - Reissue	PATENT #	10736688
CONFIRMATION #	5232	FILED BY	Matthew Phillips
PATENT CENTER #	75728742	AUTHORIZED BY	-
CUSTOMER #	148468	FILING DATE	-
CORRESPONDENCE ADDRESS	-	FIRST NAMED INVENTOR	Robert E. Wright

Payment Information

PAYMENT METHOD	PAYMENT TRANSACTION ID	PAYMENT AUTHORIZED BY
CARD / 2005	**E20264TJ03215800**	**Matthew Phillips**

PRE-AUTHORIZED ACCOUNT	PRE-AUTHORIZED CATEGORY
505836	**37 CFR 1.16 (National application filing, search, and examination fees); 37 CFR 1.17 (Patent application and reexamination processing fees); 37 CFR 1.19 (Document supply fees); 37 CFR 1.20 (Post Issuance fees); 37 CFR 1.21 (Miscellaneous fees and charges)**

FEE CODE	DESCRIPTION	ITEM PRICE($)	QUANTITY	ITEM TOTAL($)
2014	FILING OF REISSUE PATENT APPLICATION-SMALL ENTITY	140.00	1	140.00
2114	REISSUE SEARCH FEE OR REISSUE (DESIGN CPA) SEARCH FEE	308.00	1	308.00
2314	REISSUE EXAMINATION FEE OR REISSUED (DESIGN CPA) EXAMINATION FEE	1020.00	1	1020.00
2205	EACH REISSUE CLAIM IN EXCESS OF 20	80.00	57	4560.00

2204	EACH REISSUE INDEPENDENT CLAIM IN EXCESS OF THREE	240.00	1	240.00
			TOTAL AMOUNT:	**$6,268.00**

This Acknowledgement Receipt evidences receipt on the noted date by the USPTO of the indicated documents, characterized by the applicant, and including page counts, where applicable. It serves as evidence of receipt similar to a Post Card, as described in MPEP 503.

New Applications Under 35 U.S.C. 111

If a new application is being filed and the application includes the necessary components for filing date (see 37 CFR 1.53(b)-(d) and MPEP 506), a Filing Receipt (37 CFR 1.54) will be issued in due course and the date shown on this Acknowledgement Receipt will establish the filing date of the application

National Stage of an International Application under 35 U.S.C. 371

If a timely submission to enter the national stage of an international application is compliant with the conditions of 35 U.S.C. 371 and other applicable requirements a Form PCT/DO/EO/903 indicating acceptance of the application as a national stage submission under 35 U.S.C. 371 will be issued in addition to the Filing Receipt, in due course.

New International Application Filed with the USPTO as a Receiving Office

If a new international application is being filed and the international application includes the necessary components for an international filing date (see PCT Article 11 and MPEP 1810), a Notification of the International Application Number and of the International Filing Date (Form PCT/RO/105) will be issued in due course, subject to prescriptions concerning national security, and the date shown on this Acknowledgement Receipt will establish the international filing date of the application.