Trials@uspto.gov
571-272-7822

Paper 9
Date: February 6, 2025

UNITED STATES PATENT AND TRADEMARK OFFICE

BEFORE THE PATENT TRIAL AND APPEAL BOARD

AVANOS MEDICAL, INC.,
Petitioner,

v.

STRATUS MEDICAL, LLC,
Patent Owner.

IPR2024-01210
Patent 10,736,688 B2

Before MICHAEL J. FITZPATRICK, JOHN G. NEW, and ROBERT A. POLLOCK, *Administrative Patent Judges*.

NEW, *Administrative Patent Judge*.

DECISION
Granting Institution of *Inter Partes* Review
35 U.S.C. § 314

I. INTRODUCTION

Avanos Medical, Inc. ("Petitioner") filed a Petition for an *inter partes* review of claims 1–17 and 48–52 of U.S. Patent No. 10,736,688 B2 ("the '688 patent," Ex. 1002). Stratus Medical, LLC ("Patent Owner") waived filing of a Preliminary Response. Paper 7.

We review the Petition and accompanying evidence under 35 U.S.C. § 314. An *inter partes* review may not be instituted unless "the information presented in the petition … and any response … shows that there is a reasonable likelihood that the petitioner would prevail with respect to at least 1 of the claims challenged in the petition." 35 U.S.C. § 314(a). Further, a decision to institute may not do so on fewer than all of the claims challenged in the petition. *SAS Inst., Inc. v. Iancu*, 138 S. Ct. 1348, 1359–60 (2018); 37 C.F.R. § 42.108(a); *see also PGS Geophysical AS v. Iancu*, 891 F.3d 1354, 1360 (Fed. Cir. 2018) (interpreting the statute to require "a simple yes-or-no institution choice respecting a petition, embracing all challenges included in the petition").

After considering the evidence and arguments presented in the Petition, we determine that Petitioner has sufficiently demonstrated a reasonable likelihood of prevailing in showing that at least one of the challenged claims of the '688 patent is unpatentable. Accordingly, we institute inter partes review as to all of the challenged claims of the '688 patent on all of the grounds of unpatentability set forth in the Petition.

A. Real Parties-in-Interest

Petitioner identifies itself, Avanos Medical, Inc., as the real party-in-interest. Pet. 81. Petitioner explains that "Diros Technology, Inc. of

Markham, Ontario, Canada is a wholly owned subsidiary of Avanos Medical, Inc." *Id.*

Patent Owner identifies only itself, Stratus Medical, LLC, as the real party-in-interest. Paper 5, 2.

B. Background and Related Proceedings

Petitioner maintains four Petitions challenging claims of Stratus Medical's patents. The present IPR2024-01210, and IPR2024-01211, both involving the '688 patent; IPR2024-01212 involving U.S. Patent No. 10,925,664 patent (the "'664 patent," Ex. 1003); and IPR2024-01209, involving U.S. Patent No. 10,966,782 B2 ("the '782 patent," Ex. 1001).

The '644, '688, and '782 patents all claim benefit of priority to Provisional application No. 61/347,351, filed on May 21, 2010. Exs. 1001–1003, code (60). The '664 patent issued from a continuation application that matured into the '688 patent such that the two patents share a common specification. *See* Ex. 1003, code (63). The '782 patent at issue in IPR2024-01209, however, further claims benefit of priority to Provisional application No. 61/357,894, filed on June 23, 2010, that is not common to the '644 and '688 patents. *See* Exs. 1001–1003, code (60).

Other than the four Petitions before the Board, neither party identifies no past or present controversies involving the '782, '664, or '688 patents. *See* Pet. 79; Paper 5, 2.

C. The '688 Specification

The '688 patent, entitled "Methods and Systems for Spinal Radio Frequency Neurotomy," is assigned on its face to Stratus Medical, LLC, and

issued to Robert E. Wright and Scott A. Brandt on February 23, 2021. The ’688 patent claims the benefit of Provisional Application Nos. 61/280,557 and 61/347,351, both filed on May 21, 2010. Ex. 1002, codes (10), (12), (60), (72), (73).

The ’688 patent is directed to methods and systems for performing thermal tissue ablation using radiofrequency [RF] energy. *See generally* Ex. 1002, col. 1, ll. 30–41, col. 8, ll. 19–34.

RF ablation uses electrical energy transmitted into a target volume through an electrode to generate heat in the area of the electrode tip. The radio waves emanate from a non-insulated distal portion of the electrode tip …. [which] causes the temperature in the area surrounding the electrode tip to rise, thereby ablating the target tissue. Ex. 1002, col. 1, ll. 30–38. The term “RF neurotomy” applies when the target tissue is a nerve, such as a spinal nerve. *See, e.g.*, *id.* at col. 1, ll. 42–44, col. 2, ll. 46–56, col. 4, ll. 18–34; *see also id.* at cols. 30–31, ll. 67–14 (describing further applications in ablating blood vessels, cardiac tissue, and vertebral discs). Ablation (cauterization) of the target nerve disrupts the ability of the nerve to transmit pain signals to the central nervous system. *Id.* at col. 1, ll. 42–45, col. 4, ll. 28–32.

The Specification discloses a neurotomy system 100 for use in performing RF neurotomy on a patient. Ex. 1002, col. 3, ll. 36–37, col. 4, ll. 34–65, col. 5, ll. 8–24, Fig. 1. “[S]ystem 100 may include an RF generator 102 capable of generating an RF energy signal sufficient to ablate target tissue,” a needle 103 capable of conducting the RF energy to the patient, and an “imaging system 105 capable of producing internal images of

the patient 101 and the needle 103 to facilitate navigation of the needle 103 during a procedure." *Id.* at col. 4, ll. 40–49; col. 5, ll. 8–13.

> Where the needle **103** is a monopolar device, a return electrode pad **104** may be attached to the patient **101** to complete a circuit from the RF generator **102**, through the needle **103**, through a portion of the patient **101**, and back to the RF generator **102** through the return electrode pad **104**.

Id. at col. 4, ll. 49–53.

As illustrated in Figure 2A, which is reproduced below, RF neurotomy needle 103 may include "a self-contained mechanical mechanism, in the form of deployable filaments 206a, 206b, operable to expand the volume of effective RF energy delivery as compared to known single-electrode RF probes." *Id.* at col. 5, ll. 34–37, Fig. 2A.

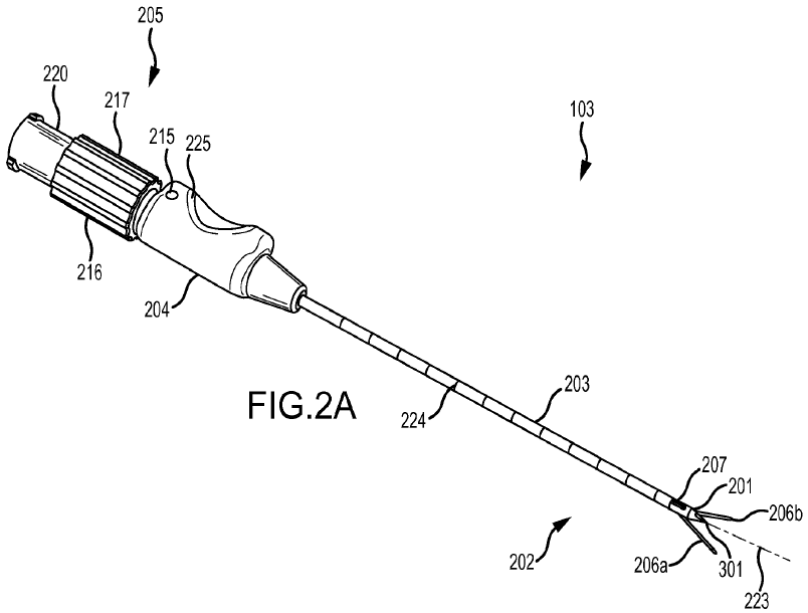

Figure 2A shows a perspective view of an RF neurotomy needle 103

As depicted in Figure 2A, the RF neurotomy needle comprises elongate member 203 having a tip 201 and deployable filaments 206a-b. Ex. 1002, col. 5, ll. 22–28. Filaments 206a-b are deployed/retracted by a

rotating actuator 216. *Id.* at col. 5, 45–47, cols. 17–18, ll. 9–9. According to the Specification, "variation in the shape, position, and/or size of lesions … may be achieved by different configurations of filaments," including varying the number, length, position, and angle of the filaments 206a-b. *See id.* at 11:11–23, cols. 11–12, ll. 11:57–19, cols. 13–14, ll. 37–5.

With reference to Figure 2B (not shown), actuator 216 may be fitted with a Luer fitting 220 at the proximal end of the needle 103, and configured for inserting (i) a removable RF probe 401 through the lumen 222 of elongate member 203, and (ii) fluid delivered through the lumen (when the probe 401 is removed). Ex. 1002, col. 2, ll. 7–12, cols. 4–5, ll. 66–67, col. 5, ll. 48–59, col. 17, ll. 47–61; *see also id.* at col. 2:12–15 ("In another implementation, an RF probe may be integrated into the needle structure for communication of an RF signal to the tip and plurality of filaments").

Figures 3A and 3B, reproduced below, provide cut away views of the distal end 202 of needle 103. Ex. 1002, col. 6, ll. 25–26.

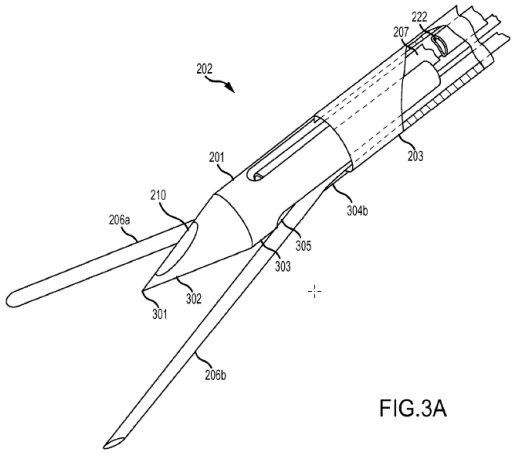

FIG.3A

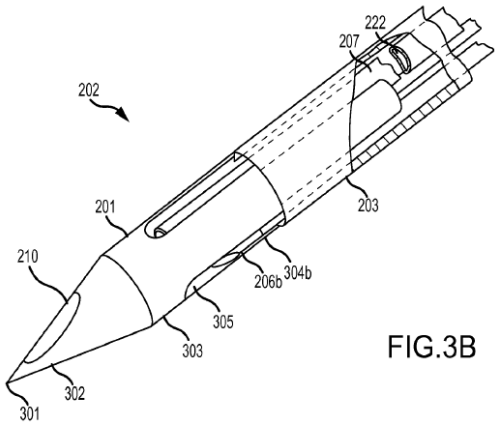

FIG.3B

Figures 3A and 3B depict filaments 206a-b in fully deployed (left) and retracted (right) configurations of the distal end of the RF neurotomy needle

Figures 3A and 3B also show tip (201) including a fluid port 210 (e.g., for delivering anesthetic and/or image enhancing dye during an RF neurotomy procedure) *via* the Luer fitting 220 when the probe 401 is removed, and a sharpened point 301 for piercing the skin of a patient and facilitating advancement through tissue. Ex. 1002, col. 5, ll. 25–27, col. 6, ll. 25–28, col. 7, ll. 34–40, col. 17, ll. 47–53.

According to the ’688 Specification, tip 311 and tube 207 containing lumen 222 may be constructed from stainless steel, or other conductive material, such that when the RF probe 401 is inserted within the tube 207, the RF energy emitted by the RF probe 401 may be conducted through the tube 207 and into and through the tip 201 and filaments 206A, 206b. Ex. 1002, col. 6, ll. 37–39, col. 9, ll. 54–58, col. 10, ll. 50–56, col. 14, ll. 53–59. The “RF energy emanating from the tip and filaments may generate heat that ablates the target nerve.” *Id.* at col. 24, ll. 27–28.

D. The Challenged Claims

Petitioner challenges claims 1–17 and 48–52 in this proceeding, of which claims 1 and 51 are independent. *See* Pet. 11–12, 82–85 (claims listing). Claim 1 is representative, which is reproduced below with Petitioner’s formatting and element designations, recites:

[1pre] A system comprising:

[1a] an RF probe; and

[1b] a needle for insertion into a patient during an RF ablation procedure, the needle comprising:

[1c] a hub;

[1d] an elongate member fixed to the hub, the elongate member comprising a lumen at an interior thereof;

[1e] a tip fixed to the elongate member at a distal end of the needle, wherein the tip is shaped to pierce tissue of the patient;

[1f] a plurality of filaments;

[1g] an actuator interconnected to the plurality of filaments, wherein movement of the actuator in a first direction relative to the hub moves the plurality of filaments relative to the tip to a deployed position distally beyond the tip, and wherein movement of the actuator in a second direction relative to the hub retracts the plurality of filaments to a retracted position in which the plurality of filaments are disposed within at least a portion of the elongate member; and

[1h] a fitting in fluid communication with the lumen, the fitting being configured to provide a connection for injection of fluid through the fitting and through the lumen, the fitting further being configured to allow for insertion of the RF probe into the lumen through the fitting,

[1i] wherein the lumen at the interior of the elongate member is configured to accept the RF probe therein to physically contact a conductive portion of the needle and

[1j] thereby electrically connect the RF probe to the tip and the plurality of filaments, such that energy emitted by the RF probe passes through the tip and the plurality of filaments, and such that the RF probe, the tip, and the plurality of filaments operate together as a single monopolar RF electrode,

[1k] wherein the conductive portion of the needle is at a distal end of the needle, and

[1l] wherein, when the RF probe is fully separated from the needle in a non-inserted state, such that none of the RF probe is within the needle, the plurality of filaments are movable *via* the actuator from the retracted position, in

> which the plurality of filaments are disposed within said at least a portion of the elongate member, to the deployed position.

Ex. 1002, col. 31, ll. 22–65.

E. Asserted Grounds of Unpatentability

Petitioner asserts the following twelve grounds of unpatentability (Pet. 12):

Ground	Claims	35 U.S.C. §	References
1	1, 6–9, 12–14, 17, 48–52	103(a)	Racz,[1] Fitz,[2] Lee[3]
2	1, 6–9, 12–14, 17, 48–52	103(a)	Racz, Fitz, Lee, Young '965[4]
3	1–9, 12–14, 17, 48–52	103(a)	Racz, Fitz, Lee, Scheibe[5]
4	1–9, 12–14, 17, 48–52	103(a)	Racz, Fitz, Lee, Young '965, Scheibe
5	9	103(a)	Racz, Fitz, Lee, Young '201[6]
6	9	103(a)	Racz, Fitz, Lee, Young '201, Young '965
7	9	103(a)	Racz, Fitz, Lee, Young '201, Scheibe

[1] Racz et al. (US 6,146,380, November 14, 2000) ("Racz") Ex. 1009.

[2] Fitz (2005/0059964 A1, March 17, 2005) ("Fitz") Ex. 1011.

[3] Lee et al. (US 2007/0016183 A1, January 18, 2007) ("Lee") Ex. 1010.

[4] Young, (US 2006/0084965 A1, April 20, 2006) ("Young '965") Ex. 1012.

[5] Scheibe et al. (US 2007/0260223 A1, November 8, 2007) ("Scheibe") Ex. 1013.

[6] Young (US 2009/0112201 A1, April 30, 2009) ("Young '201") Ex. 1016.

Ground	Claims	35 U.S.C. §	References
8	9	103(a)	Racz, Fitz, Lee, Young '201, Young '965, Scheibe
9	10, 11, 15	103(a)	Racz, Fitz, Lee, Gough '516[7]
10	10, 11, 15	103(a)	Racz, Fitz, Lee, Gough '516, Young '965
11	10, 11, 15	103(a)	Racz, Fitz, Lee, Gough '516, Scheibe
12	10, 11, 15	103(a)	Racz, Fitz, Lee, Gough '516, Young '965, Scheibe
13	16	103(a)	Racz, Fitz, Lee, Rosinko[8]
14	16	103(a)	Racz, Fitz, Lee, Rosinko, Young '965
15	16	103(a)	Racz, Fitz, Lee, Rosinko, Scheibe
16	16	103(a)	Racz, Fitz, Lee, Rosinko, Young '965, Scheibe

In support of its patentability challenges, Petitioner relies on the Declaration of Dr. Robert Tucker, Ph.D., M.D. (Ex. 1032). In light of the level of ordinary skill in the art provisionally adopted in section II.A, below, we find, for the purposes of this Decision, Dr. Tucker qualified to provide expert testimony. *See* Ex. 1032 ¶¶ 1–14, Appendix A.

---

[7] Gough (US 6,652,516 B1, November 25, 2003) ("Gough '516") Ex. 1017.

[8] Rosinko (US 6,551,302 B1, April 22, 2003) ("Rosinko") Ex. 1020.

II. ANALYSIS

"In an [*inter partes* review], the petitioner has the burden from the onset to show with particularity why the patent it challenges is unpatentable." *Harmonic Inc. v. Avid Tech., Inc.*, 815 F.3d 1356, 1363 (Fed. Cir. 2016) (citing 35 U.S.C. § 312(a)(3) (requiring *inter partes* review petitions to identify "with particularity … the evidence that supports the grounds for the challenge to each claim")). This burden of persuasion never shifts to Patent Owner. *See Dynamic Drinkware, LLC v. Nat'l Graphics, Inc.*, 800 F.3d 1375, 1378 (Fed. Cir. 2015) (discussing the burden of proof in *inter partes* review).

A claim is unpatentable under 35 U.S.C. § 103(a) if the differences between the subject matter sought to be patented and the prior art are such that the subject matter as a whole would have been obvious at the time the invention was made to a person having ordinary skill in the art to which that subject matter pertains. *KSR Int'l Co. v. Teleflex Inc.*, 550 U.S. 398, 406 (2007). The question of obviousness is resolved on the basis of underlying factual determinations including: (1) the scope and content of the prior art; (2) any differences between the claimed subject matter and the prior art; (3) the level of ordinary skill in the art; and (4) objective evidence of non-obviousness, if present. *KSR*, 550 U.S. at 406.

"[W]hen a patent 'simply arranges old elements with each performing the same function it had been known to perform' and yields no more than one would expect from such an arrangement, the combination is obvious." *Id.* at 417 (quoting *Sakraida v. Ag Pro, Inc.*, 425 U.S. 273, 282 (1976)). But in analyzing the obviousness of a combination of prior art elements, it can also be important to identify a reason that would have prompted one of skill

in the art "to combine … known elements in the fashion claimed by the patent at issue." *Id.* at 418.

"[I]n considering the disclosure of a reference, it is proper to take into account not only specific teachings of the reference but also the inferences which one skilled in the art would reasonably be expected to draw therefrom." *In re Preda*, 401 F.2d 825, 826 (CCPA 1968). Moreover, a precise teaching directed to the specific subject matter of a challenged claim is not necessary to establish obviousness. *KSR,* 550 U.S. at 418. Rather, "any need or problem known in the field of endeavor at the time of invention and addressed by the patent can provide a reason for combining the elements in the manner claimed." *Id.* at 420. Accordingly, a party that petitions the Board for a determination of unpatentability based on obviousness over multiple references must show that "a skilled artisan would have been motivated to combine the teachings of the prior art references to achieve the claimed invention, and that the skilled artisan would have had a reasonable expectation of success in doing so." *In re Magnum Oil Tools Int'l, Ltd.*, 829 F.3d 1364, 1381 (Fed. Cir. 2016) (quotations and citations omitted).

A. Person of Ordinary Skill in the Art

In determining the level of skill in the art, we consider the type of problems encountered in the art, the prior art solutions to those problems, the rapidity with which innovations are made, the sophistication of the technology, and the educational level of active workers in the field. *See Custom Accessories, Inc. v. Jeffrey-Allan Indus., Inc.*, 807 F.2d 955, 962 (Fed. Cir. 1986); *see also Orthopedic Equip. Co. v. U.S.*, 702 F.2d 1005, 1011 (Fed. Cir. 1983).

According to Petitioner, the relevant technical field is "'thermal ablation systems and methods,' which includes 'methods for performing Radio Frequency (RF) neurotomy.'" Pet. 10 (citing Ex. 1002, col. 1, ll. 16–20). Ponting to the testimony of Dr. Tucker, Petitioner contends that the ordinarily skilled artisan in this field would have had at least:

> i. a bachelor's degree in biomedical engineering, or a related field, such as mechanical engineering, biomechanical engineering, or bioengineering, who also has at least 3 years of experience with thermal ablation system and methods; or
>
> ii. an advanced degree in the same areas of academic study with at least 1 year[] of experience with thermal ablation systems and methods.

Id. (citing Ex. 1032 ¶ 119) (paragraphing added).

Absent evidence or argument to the contrary, we apply Petitioner's proposed definition, as it appears to be consistent with the level of skill of the prior art and is supported by the presently unopposed testimony of Dr. Tucker. *See Okajima v. Bourdeau*, 261 F.3d 1350, 1355 (Fed. Cir. 2001) (the level of ordinary skill in the art may be reflected in the prior art itself).

We note, however, that the open-ended language 'at least' expands the ranges of education and experience indefinitely with no upper bound, thereby also encompassing those of extraordinary skill as well. Therefore, we do not adopt this aspect of Petitioner's formulation.

B. Claim Construction

The Board interprets claim terms in an *inter partes* review using the same claim construction standard that is used to construe claims in a civil action in federal district court. *See* 37 C.F.R. § 42.100(b)). In construing

claims, district courts give claims their ordinary and customary meaning, which is "the meaning that the term would have to a person of ordinary skill in the art in question at the time of the invention." *Phillips v. AWH Corp.*, 415 F.3d 1303, 1312–13 (Fed. Cir. 2005) (en banc).

With respect to the challenged claims, Petitioner contends that no claim term requires express construction. Pet. 11 (citing Ex. 1032 ¶ 120 (Dr. Tucker's testimony that "the terms in the Challenged Claims would be understood by a POSA to have their plain and ordinary meaning and do not require a special construction or definition")). We agree with Petitioner that, on the record presently before us, no claim term requires express construction.

C. Overview of Asserted References

As discussed in Section I.E., above, Petitioner relies on Racz, Fitz, and Lee for Ground 1. Grounds 2–16 further combine Racz, Fitz, and Lee with one or more of Young '965, Scheibe, Young '201, Gough '516, and Rosinko. For the purpose of institution, we find it sufficient to address Ground 1 and its supporting references.

1. <u>Overview of Racz (Ex. 1009)</u>

Racz discloses a "Bent Tip Electrical Surgical Probe" comprising a "medical needle or cannula for stimulation or ablation." Ex. 1009, Abstr. Racz discloses that:

> The device is partially insulated and has a tip that is at least partially electrically exposed; a connection to an external signal generator provides electrical stimulation or high-frequency heating of the patient's tissue proximal to the exposed tip. The device includes a longitudinal passage to facilitate the injection

> of fluids or the insertion of instruments through the cannula or needle.

Id.

Figure 1 of Racz is reproduced below:

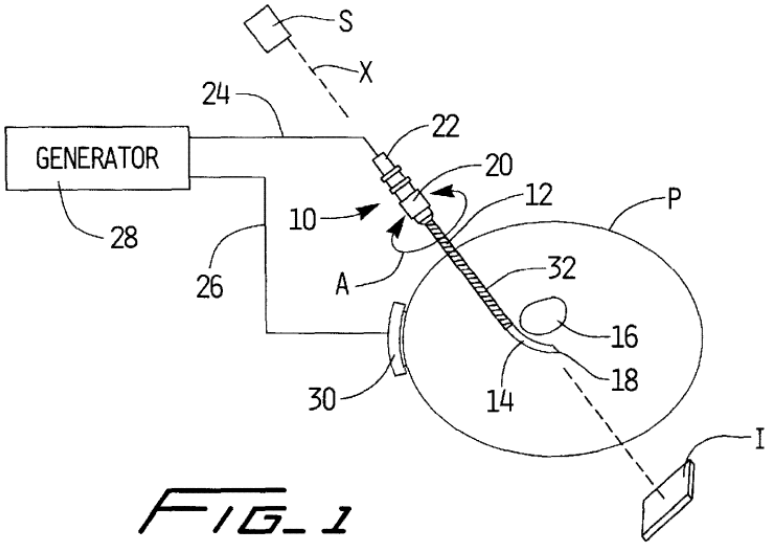

Figure 1 is a schematic diagram of Racz's electrical surgical probe system

The system of Racz comprises "a radio-frequency electrode cannula 10 having a shaft 12 inserted into a portion P of a patient's body." Ex. 1009, col 3, ll. 24–26, 38–40. Racz discloses that "[t]he cannula 10 can be inserted directly through the skin of the body portion P to locate the tip 14 in a target position within the body." *Id.* at col. 3, ll. 42–44. The RF "cannula 10 further comprises a hub 20. The hub 20 is capable of accommodating an electrical probe 22, which includes a segment that is inserted into and received by the shaft 12 of the cannula 10." *Id.* at col. 3, ll. 60–63. "[E]lectrical connection 24 couples the cannula 10 to an external signal generator 28 by way of the hub 20 and the probe 22. A second electrical connection 26 connects the external signal generator 28 to a reference electrode 30 in contact with the patient's body portion P." *Id.* at col. 4,

ll. 1–5. "[S]ignal generator 28 can be a source of electrical stimulation, pulsed high-frequency stimulation signals, high frequency signals, pulsed radio-frequency output, or other electrical waveforms." *Id.* at col. 4, ll. 6–9.

Racz's Figure 2B, reproduced below, shows a specific embodiment of the system diagramed in Figure 1.

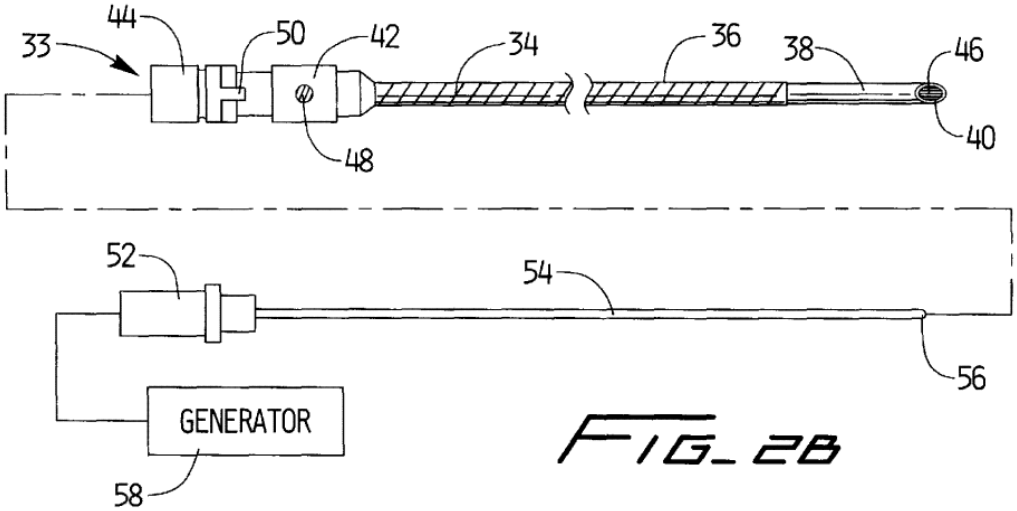

Figure 2B of Racz depicts a specific embodiment of electrical surgical probe system

Ex. 1009, col. 3, ll. 27–30; col. 4, ll. 59–62, col. 5, ll. 7–51. The cannula, 33 in this embodiment,[9] includes a shaft 34 defining an internal lumen. *Id.* at col. 5, ll. 41–45. Shaft 34 "comprises a hollow metal tube with an insulated portion 36 illustrated by hatched lines," and an exposed distal tip 38. *Id.* at

[9] According to Petitioner, Racz uses different numbering system for the corresponding elements of its figures such that, for example, cannula 10 of Figure 1 corresponds to cannula 33 of Figures 2A. In discussing the specific embodiment of Figure 2b, Petitioner references both sets of numbers, as, e.g., "canula (10/33)." *See, e.g.,* Pet. 13–14. Petitioner applies the same convention to Lee, e.g., referencing "filaments (22/1622)," to indicate that a corresponding structure is differently labeled 22 in Figure 1 and 1622 in Figure 48 of that reference. *See id.* at 24–27. Absent evidence to the contrary, we find Petitioner's labeling convention acceptable.

col. 4, ll. 62–65. The distal tip 38 includes a pointed end (40), which "can be useful in penetrating tough tissue." *Id.* at col. 5, ll. 3–5.

In operation, cannula 33, "with a stylet positioned in the shaft 34, is inserted into the patient's body portion P." Ex. 1009, col. 5, ll. 31–33. "The stylet is then removed, and the probe 52 is inserted into the shaft 34." *Id.* at col. 5, ll. 37–38. "The probe 52 is connected to the signal generator 58" in order to generate high-frequency heating, or other electrical stimulation. *Id.* at col. 3, ll. 60–63, col. 4, ll. 18–23, col. 4, ll. 18–20.

The electrical probe 52 includes a probe shaft 54 having a probe tip 56, which may include a temperature sensor. Ex. 1009, col. 5, ll. 26–30, Fig. 2B. When the probe 52 is fully inserted into the cannula 33, "physical contact" between the probe 52 and the cannula's tip 38 conducts the RF energy to the tip 38. *Id.* at col. 3, ll. 60–65, col. 4, ll. 18–23, col. 5, ll. 41–48. Racz's cannula 33 thus provides "electrical stimulation or high frequency heating of tissue near the exposed electrical tip 14." *Id.* at 3:60 to 4:23, 5:41–51, Fig. 1.

2. <u>Overview of Fitz (Ex. 1011)</u>

Fitz is directed to "[i]mproved-coverage RF neurotomy instrumentation" comprising a multiplicity of electrically conductive electrodes. Ex. 1011, Abstr.; claim 1.

Fitz discloses that a known problem with single-tip RF neurotomy devices was "that they do not allow for adequate coverage of the target area," and produce lesions that "extend[] only a few millimeters at the diameter of the midportion of the lesion" from the exposed needle tip. Ex. 1011 ¶ 4. "Although multiple lesions may be created in order to

enhance coverage, this is more time-consuming and usually more painful to the patient." *Id.* ¶ 5. Moreover, "creation of multiple lesions also exposes the patient to more radiation, as fluoroscopy is used to place and replace the needles." *Id.*

To address inadequate coverage in single-tip neurotomy devices, Fitz discloses "an introducer used to deploy a set of electrodes." Ex. 1011, Abstr. Fitz's

> introducer features a plurality of elongated, co-extensive cannula, each including an insulated, electrically conductive electrode. Each electrode has a proximal end configured for attachment to a source of energy, and an exposed distal tip to deliver the energy to a localized region, and each electrode slides within its respective cannula so as to enhance the energy coverage area.

Id. ¶ 9. According to Fitz, at least some of the "electrodes [may be] constructed of a shape-memory material to control deployment. The cannula are generally parallel, and may either lie in the same plane or may be arranged otherwise, including spoke-like cross-sections." *Id.* ¶ 10. "At least some of the electrodes may slide independently, and at least some of the electrodes may slide in unison." *Id.* ¶ 11.

Fitz's Figure 4 is reproduced below.

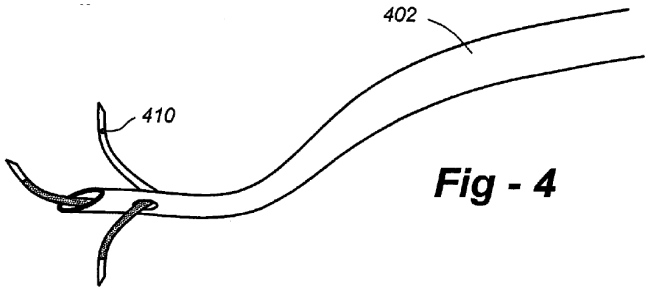

Figure 4 represents an embodiment of Fitz's invention

Figure 4, of Fitz depicts side port inducer 402. Ex. 1011 ¶ 15. In this embodiment, "introducer 402 is curved, and a plurality of electrodes are deployed through the tip and/or multiple side ports." *Id.* ¶ 20.

Fitz's Figure 5 is reproduced below.

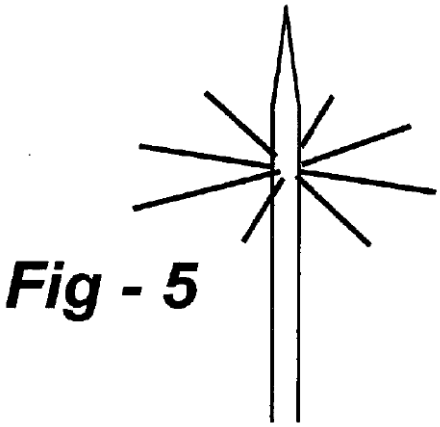

Figure 5 shows an embodiment in the form of a radial array

In the embodiment of Figure 5 of Fitz, the "introducer ha[s] a tip and sufficient side ports to form an array of electrodes once deployed. Although the side electrodes are shown as emanating from more or less the same distance from the tip, this is not necessary, in that a helix or spiral of apertures may alternative[ly] be used." *Id.* ¶ 21.

3. Overview of Lee (Ex. 1010)

Lee discloses a radio frequency ablation device having a plurality of deployable electrodes or "ablation antennae." *See, e.g.*, Ex. 1010, Abstr., ¶ 8. Lee Figure 1 of Lee is reproduced below.

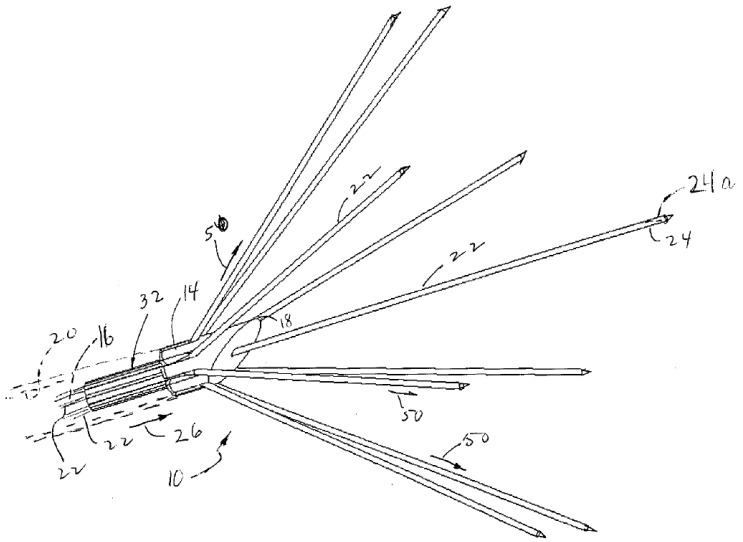

Figure 1 is a perspective view of the distal portion of Lee's "multiple antenna ablation device" or "ablation trocar."

As depicted in Figure 1, the ablation trocar 10 includes a trocar point 14 having "a forward piercing edge surface 18." Ex. 1010 ¶ 91. "[T]rocar point 14 is mounted on a cannula 16, [which] … may be made of . . . metal covered with a plastic insulating layer, to prevent ablative energy from leaking out of the device along the length of the cannula." *Id.* "Cannula 16 defines an internal lumen 20 which carries a plurality of stylets 22" each of which "comprises a long and straight springy wire-like member" "made of a springy conductive material such as a springy nickel titanium alloy." *Id.* ¶ 92.[10]

"[S]tylets 22 …. may be housed wholly within lumen 20 of cannula 16." Ex. 1010 ¶ 92 (referencing Fig. 2). But in the deployed configuration

[10] Petitioner reasonably refers to Lee's conductive stylets/electrodes as "filaments." *See, e.g.*, Pet. 19, 36 (citing Ex. 1032 ¶¶ 139–140, 176–177; Ex. 1002, col. 9, ll. 54–56 ("filaments" may be "constructed from a material operable to conduct RF energy, e.g., a metal such as … Nitinol, or shape memory alloy")).

shown in Figure 1, "the ends of the wire-like stylets 22 are exposed," such that RF energy may be conducted from the tips of the stylets after they exit trocar 10 and "define an ablation volume in the target tissue." *Id.* ¶¶ 12, 92, 93, 99, 102. "The electrodes may be used in a monopolar fashion with the ablation stylets excited with RF energy and a return electrode being applied usually in the form a conductive pad in contact with a remote surface on the patient." *Id.* at ¶ 24.

As illustrated in Figure 1, stylets 22 are positioned around the perimeter of the tip 14 and extend outwardly in a "cone" orientation around the central stylet (labeled 24*a* to indicate a sharpened piercing point), which is deployed through the center of the trocar point 14. Ex. 1010 ¶¶ 92, 102, 103, 128, Figs. 1–3. Lee discloses that stylets 22 "may be connected to suitable advancement and retraction mechanisms." *Id.* ¶ 106. During deployment, the electrically conductive stylets around tip 14 are guided by "deflection surfaces," which may comprise a plurality of channels and ramps. *Id.* ¶¶ 16, 18, 87 (the "electrodes are directed into the tissue at a variety of angles by a mandrel like delivery member which serves as a deflection surface"), 91, 102, Abstr., claims 8, 10. The ends of the exposed stylets transmit RF energy to define an ablation volume. *See, e.g.*, *id.* ¶¶ 7, 12, 123, 129, claims 1, 2.

D. Ground 1: Asserted Obviousness in view of Racz, Fitz, and Lee

For Ground 1, Petitioner challenges claims 1, 6–9, 12–14, 17, and 48–52 as obvious in view of Racz, Fitz, and Lee. Pet. 13–62. For the purpose of institution, we focus on independent claim 1. As noted above, Patent Owner

waived filing of a Preliminary Response. Accordingly, Petitioner's assertions—and the testimony of its Declarant—are presently unopposed.

1. Petitioner's arguments

a. 1[pre]

Claim 1's preamble recites "a system" ([1pre]). Petitioner contends that, although the preamble is not limiting, Racz is directed to a "a system for pain relief" and discloses [1pre]. Pet. 27 (citing Ex. 1009, col. 1, ll. 4–9, col. 22, ll. 46–65; Ex. 1032 ¶ 163).

b. [1a] and 1[b]

Petitioner argues that Figure 1 of Racz discloses that its system includes an RF electrode cannula (10/33) configured to receive a removable electrical probe (22/52). Pet. 27 (citing Ex. 1009, col. 3, ll. 38–45, col. 3, ll. 60–65, col. 4, ll. 59–62, col. 5, ll. 7–51, Figs. 1, 2A/B). Petitioner contends that the probe (22/52) is connected to a signal generator (28), which provides "pulsed radio-frequency output … or other electrical waveforms" (i.e., RF energy). *Id.* (citing Ex-1009, col. 2, ll. 53–56, cols. 3–4, ll. 66–20, col. 5, ll. 38–45, col. 6, ll. 4–7, col. 7, ll. 43–50; Ex. 1032 ¶ 164). According to Petitioner, the probe (22/52) conveys this RF energy to the cannula's tip (14/38). *Id.* (citing Ex. 1009, col. 4, ll. 18–23, col 4, ll. 1–3). Therefore, Petitioner argues, Racz's probe (22/52) is a "an RF probe" ([1a]). *Id.* at 27–28 (citing Ex. 1032 ¶ 164).

Petitioner argues further that Racz's cannula (10/33) is an "electrical needle" (or "spinal needle") configured to deliver "electrical stimulation pulses or high-frequency signals to the vicinity of a neural structure." Pet.

28 (citing Ex. 1009, col 1, ll. 4–10, col. 2, ll. 46–65, col. 3, ll. 24–26, col. 4., ll. 59–62, col. 5, ll. 35–45, col. 6, ll. 38–45, cols. 6–7, ll. 59–10). Petitioner contends that, with the probe (22/52) inserted, the cannula (10/33) can be used to generate "radio-frequency heat lesions" *via* the exposed tip (14/38) and thereby "modify or coagulate" nerves along a patient's spine (ablation). *Id.* (citing Ex. 1009, col. 2, ll. 53–56, col. 4, ll. 18–23 49–58, col. 7, ll. 43–50, Abstr.). Therefore, Petitioner argues, Racz's electrode cannula (10/33) is a "a needle for insertion into a patient during an RF ablation procedure" ([1b]). *Id.* (citing Ex. 1032 ¶ 165). Petitioner's modified and annotated version of Figure 1 of Racz is reproduced below:

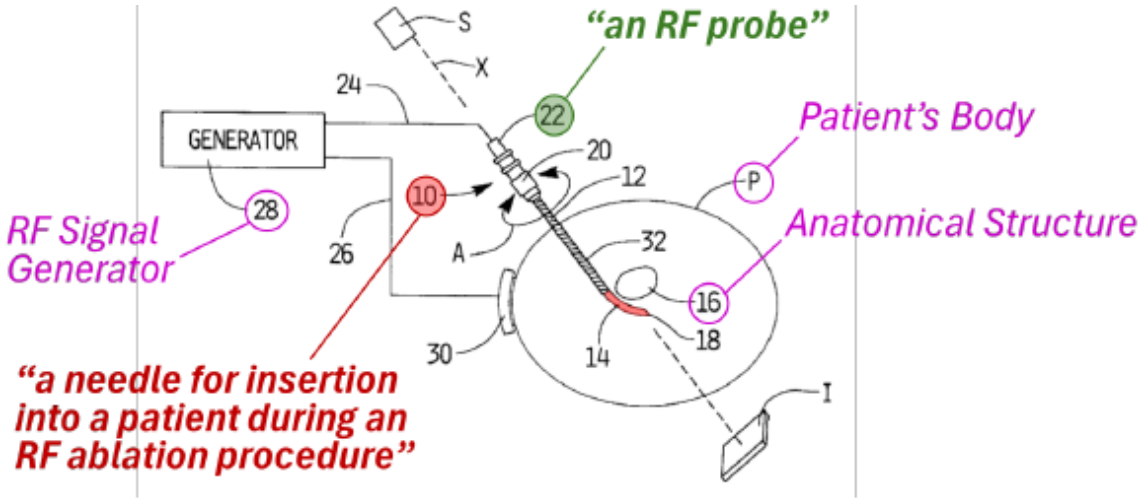

Racz – Fig. 1 (annotated to show [1a] and [1b])

c. [1c] and [1d]

Petitioner contends that the proximal end of Racz's cannula (10/33) includes a "hub" (20/42/70) that is fixed to cannula's shaft (12/34). Pet. 29 (citing Ex. 1009, cols. 3–4, ll. 59–3, col. 5, ll. 5–20, cols. 5–6, ll. 66–17, col. 9, ll. 44–48). Petitioner notes that Racz teaches that the hub (20/42/70) is "capable of accommodating an electrical probe 22, which includes a segment that is inserted into and received by the shaft 12 of the cannula 10."

Id. (quoting Ex. 1009, col. 3, ll. 59–65). Petitioner therefore asserts that Racz's cannula (10/33) includes "a hub" [1c]. *Id.* (citing Ex. 1032 ¶ 166).

Petitioner argues that Racz's cannula (10/33) comprises "an elongated shaft" (12/34) defining "an internal lumen." Pet. 29 Ex. 1009, col. 1, ll. 33–36, col. 2, ll. 48–51, col. 5, ll. 41–48, claims 1, 11). In one example, Petitioner contends, the shaft (12/34) is a "metal tubular shaft" (i.e., a tube defining an internal lumen). *Id.* (citing Ex. 1009, col. 22, ll. 48–51, claim 8). Petitioner contends that Racz teaches that the shaft's lumen accepts the radiofrequency probe (22/52) *via* the hub (20/42/70), which is "mounted at a proximal end of the shaft." *Id.* (citing Ex. 1009, col. 9, ll. 44–48, col. 3, ll. 38–42, col. 3, ll. 60–65, col. 5, ll. 26–28, col. 5, ll. 37–51). Petitioner argues that Racz's shaft (12/34) is "an elongate member fixed to the hub, the elongate member comprising a lumen at an interior thereof" as recited in [1e]. *Id.* at 30 (citing Ex. 1032 ¶ 167).

d. [1e] and [1k]

Petitioner argues that Racz's exposed tip (14/38) is positioned at a distal end of the shaft (12/34) and defines a "self-penetrating point" (18/40). Pet. 30 (citing Ex. 1009, col. 3, ll. 47–51, col. 1, ll. 28–30, col. 3, ll. 4–7, col. 5, ll. 3–5, col. 5, ll. 31–34). According to Petitioner, this allows the cannula (10/33) to be "inserted directly through the skin of the body portion P" and to penetrate "tough tissue near hard, bony structures." *Id.* at 31 (citing Ex. 1009, col. 3, ll. 42–45, col. 3, ll. 4–18, col. 5, ll. 3–5, col. 6, ll. 54–58, col. 5, ll. 31–34, Figs. 1, 2A, 2B). Petitioner asserts that Racz's tip (14/38) is "fixed to the elongate member at a distal end of the needle" and "shaped to pierce tissue of the patient" [1e]. *Id.* (citing Ex. 1032 ¶ 168).

Petitioner argues further that Racz teaches that tip (14/38) conducts electrical signals for "high-frequency heating" (i.e., generating radio-frequency heat lesions). Pet. 31 (citing Ex. 1009, col. 4, ll. 18–23, col. 4, ll. 52–58, col 3, ll. 41–59, col. 5, ll. 38–45, col. 7, ll. 43–50. Petitioner contends that tip (14/38) is made of a conductive material (i.e., where the cannula's "shaft (34) comprises a hollow metal tube," the exposed tip (14/38) may be "an extension of the metal tube"). *Id.* (citing Ex. 1009, cols. 4–5, ll. 60–1, col. 5, ll. 45–48). As such, physical contact with the probe (22/52) transmits RF energy to the tip (14/38) and into patient tissue. *Id.* (citing Ex. 1009, col. 3, ll. 60–65, col. 4, ll. 18–23, col. 5, ll. 41–48, Fig. 2B; Ex. 1032 ¶169). Therefore, argues Petitioner, Racz's tip (14/38) is "[a] conductive portion of the needle is at a distal end of the needle" [1k]. *Id.*

e. [1h]

Petitioner next argues that proximal hub (20/42/70) of Racz's cannula is a fitting, such as "a standard hypodermic needle or luer type hub, capable of connection to stylets, electrical probes, syringes, or injection tubes." Pet. 32 (citing Ex. 1009, cols. 5–6, ll. 66–7). Petitioner contends that the hub/fitting (20/42/70) allows "diagnostic or therapeutic liquids" to be dispensed through the cannula's shaft (12/34) and out of pointed end (40). (citing Ex. 1009, col. 5, ll. 14–18, col. 6, ll. 9–12, col. 1, ll. 29–33; Ex. 1032 ¶¶ 170, 48–49). Petitioner asserts that Racz's device thus includes "a fitting in fluid communication with the lumen, the fitting being configured to provide a connection for injection of fluid through the fitting and through the lumen" [1h]. *Id.* at 33 (citing Ex. 1032 ¶ 170).

Petitioner argues further that, in addition to receiving fluid from a fluid source, Racz's hub/fitting (20/42/70) is also configured for receiving the probe (22/52) (for transmitting RF energy). Pet. 33 (citing Ex. 1009, col. 3, ll. 59–65, col. 5, ll. 14–18, col. 6, ll. 9–12, col. 1, ll. 29–33, cols. 5–6,, ll. 66–7, col. 9, ll. 30–39, col. 10, ll. 8–10). Petitioner asserts that Racz's fitting is further "configured to allow for insertion of the RF probe into the lumen through the fitting" [1h]. *Id.* (citing Ex. 1032 ¶ 171).

f. [1i]

Petitioner next argues that, when Racz's probe (22/52) is "inserted into and received by the shaft 12 of the cannula 10," the "physical relationship between the probe 22 and the shaft 12 facilitates electrical contact between the two elements." Pet. 33 (citing Ex. 1009, col. 3, ll. 60–65). Accordingly, argues Petitioner, "electrical signals from the signal generator 58 are communicated to the exposed distal tip 38 by way of contact between the probe shaft 54 and [the] internal lumen defined by the electrode shaft 34." *Id.* (citing Ex. 1009, col. 5, ll. 41–48, col. 4, ll. 18–23). In other words, Petitioner contends, the probe (22/52) is electrically connected to the tip (14/38) by "physical contact between the probe shaft 54 and the electrode shaft 34." *Id.* (citing Ex. 1009, col. 5, ll. 41–48; Ex. 1032 ¶ 172).

Furthermore, argues Petitioner, when inserted into the lumen at the interior of the cannula's shaft (12/34), the probe's shaft (54) is configured to extend the full length of the cannula shaft (12/34) such that the probe's tip (56) is positioned at the cannula's tip (14/38), and that tip (56) may also

include a temperature sensor. Pet. 34 (citing Ex. 1009, Fig. 2B, col. 5, ll. 28–30; Ex. 1032 ¶ 173, 50).

Petitioner argues that, because Racz's probe shaft (54) extends the full length of the cannula's internal lumen, a skilled artisan would have recognized that the "physical contact between the probe shaft 54 and the electrode shaft 34" would occur at least at the conductive tip (14/38) of the cannula (10/33), because the probe (22/52) would necessarily contact the shaft (12/34) along its full length (including tip (14/38)). Pet. 34–35 (citing Ex. 1009, col 5, ll. 45–48; Ex. 1032 ¶ 174). Therefore, argues Petitioner, when Racz's RF probe (22/52) is inserted into the shaft (12/34) ("the lumen at the interior of the elongate member"), the RF probe will "physically contact a conductive portion of the needle" [1i]. *Id.* at 35.

g. [1f] and [1j]

Petitioner argues that, although Lee uses the terms "stylet" and "electrode," Lee discloses that these stylets/electrodes (22/1622) are each "a long and straight springy wire-like member" and may be "made of a springy conductive material such as a springy nickel titanium alloy" (i.e., Nitinol). Pet. 35–36 (citing Ex. 1010 ¶¶ 92, 87). Petitioner argues that Lee's stylets/electrodes (22/1622) are therefore "a plurality of filaments" [1f]. *Id.* at 36 (citing Ex. 1032 ¶¶ 176–177; Ex.1002, col. 9, ll. 54–56).

In combining the teachings of Racz and Lee, Petitioner argues, a person or ordinary skill in the art would have considered the at least the following teachings from Racz and Lee:

i. Racz's distal tip (14/38) is electrically active *via* "physical contact" between the probe (22/52) and tip (14/38) (Ex. 1009, col. 5, ll. 41–51);

ii. Racz discloses that physical contact is an effective method of transmitting RF energy because the probe (22/52) and tip (14/38) are constructed from conductive materials (Ex. 1009, col. 4–5, ll. 62–5, col 5, ll. 45–58);

iii. Lee's filaments (22/1622) are "springy wire-like member[s]" made from a conductive material (e.g., Nitinol) (Ex. 1010 ¶¶ 87, 92, 17);

iv. Lee's filaments (22/1622) "may be housed wholly within lumen 20 of cannula 16" (Ex. 1010 ¶ 92);

v. Lee's filaments (22/1622) physically contact and are guided by "deflection surfaces" (channels and ramps) at the tip of Lee's RF cannula (Ex. 1010 ¶¶ 16, 18, 87, 92, 102, claims 8, 10);

vi. Lee's device includes perimeter filaments (22/1622) arranged around the inner perimeter of the cannula such that they surround and provide space for a central element (a central filament (22/1622) that extends in a straight-forward direction out of the center of the cannula's tip) (Ex. 1010 ¶¶ 92, 102, 146, Figs. 1–3, 48–49);

vii. when deployed, Lee's perimeter filaments (22/1622) extend outwardly and around the cannula's tip in a "cone" shape (Ex. 1010 ¶¶ 103, Figs. 1, 5, 48–49);

viii. Lee's filaments (22/1622) are electrically active and—like Racz's tip (14/38)—transmit RF energy to "define an ablation volume in the target tissue" (Ex.1010 ¶ 12, 84);

ix. "variations in ablation volume may be achieved by varying the extent to which [filaments] are extended from the distal end of the trocar and the direction in which [filaments] extend" and that "the arrangement of [filaments] may … form any desired pattern (Ex. 1010 ¶¶ 123–131, 84, 103).

Pet. 36–37 (citing Ex. 1032 ¶ 178).

Petitioner argues that, in view of these teachings in Racz and Lee, a skilled artisan would have found implementing Lee's perimeter filaments (22/1622) on Racz's distal tip (14/38) to be a routine engineering task. Pet. 37 (citing Ex. 1032 ¶ 179). According to Petitioner, a person of ordinary skill in the arts would have recognized that it would be appropriate to implement Lee's perimeter filaments (22/1622) without including Lee's central filament. *Id.* Petitioner asserts that Lee discloses that any number and arrangement of filaments may be implemented to provide a desired ablation volume. *Id.* at 38 (citing Ex. 1010 ¶¶ 103, 105, 106). Additionally, Petitioner argues, because Racz's tip (14/38) is already active, a skilled artisan would have recognized that Lee's central filament would not be necessary. *Id.* (citing Ex. 1009, col. 3, ll. 60–63, col. 4, ll. 18–23; Ex. 1032 ¶ 179).

Petitioner therefore argues that a person of ordinary skill in the art a person of ordinary skill in the art would have been motivated to implement Lee's perimeter deployable filaments (22/1622) on the distal tip (14/38) of Racz's cannula (10/33) for the purpose of expanding and controlling the energy coverage area of Racz's device. Pet. 35. Specifically, Petitioner asserts that a skilled artisan would have been motivated to implement Lee's perimeter filaments (22/1622) around Racz's tip (14/38) to provide a desired ablation volume (e.g., in a full or partial "cone" shape) and omit Lee's central filament. Pet. 38 (citing Ex. 1032 ¶¶ 179, 73–75, 79–83). Petitioner contends that, as both Lee and Fitz confirm, this would improve Racz's device by providing an expanded and controlled energy coverage area. *Id.* (citing Ex. 1011 ¶¶ 9–10, Abstr.; Ex. 1010 ¶¶ 12, 84, 123–131; Ex. 1032 ¶ 179).

Petitioner argues further that, in implementing Lee's perimeter filaments (22/1622) on Racz's distal tip (14/38), a person of ordinary skill in the art would have found it obvious to modify Racz's tip (14/38) to include internal deflection surfaces (12/1612) (e.g., channels and ramps as disclosed in Lee) to guide the perimeter filaments (22/1622) outwardly around Racz's tip (14/38). Pet. 39 (citing Ex. 1010 ¶¶ 16, 18, 92, 102, claims 8, 10; Ex. 1032 ¶ 180). Petitioner asserts that it would have been obvious to provide openings in Racz's distal tip (14/38) (e.g., in communication the internal deflection surfaces as disclosed in Lee) such that Lee's perimeter filaments (22/1622) can, when deployed, exit Racz's distal tip (14/38). *Id.* (citing Ex. 1010 ¶ 92, 102; Ex. 1032 ¶ 180).

Furthermore, argues Petitioner, and to preserve the functionality of Racz's removable electrical probe (22/52) and active tip (14/38) (and consistent with Lee's teachings) a skilled artisan would have arranged the perimeter filaments, channels, and ramps around the internal perimeter of Racz's cannula (10/33). Pet. 39 (citing Ex. 1010 ¶¶ 91, 92, 98, 102; Ex. 1032 ¶ 181). Petitioner recapitulates that Racz's probe (22/52) is configured to extend the full length of the cannula's shaft (12/34) to supply RF energy to the tip (14/38) and measure tissue temperature. Pet. 40. According to Petitioner, by omitting Lee's central filament and arranging the perimeter filaments, channels, and ramps around the inner perimeter of Racz's cannula (10/33), a skilled artisan could have implemented Lee's perimeter filaments (22/1622) without obstructing Racz's cannula (10/33). *Id.* at 40. Petitioner contends that this modification would preserve the

functionality of Racz's electrical probe (22/52), which is needed to transmit RF energy. *Id.* (citing Ex. 1032 ¶ 181–182).

Petitioner next points to the opinion of its expert, Dr. Tucker, that Lee's deflection surfaces (channels and ramps) would be easily formed as an integral portion of Racz's distal tip (14/38) (e.g., by defining internal channels and ramps as a unitary part of the cannula's shaft (12/34)). Pet. 40 (citing Ex. 1032 ¶ 183). Dr. Tucker notes that, alternatively, the deflection surfaces would be defined on a separate, electrically conductive mandrel secured to the end of Racz's shaft (12/34) and provided with a lumen to receive a distal portion of the electrical probe (22/52) (the mandrel thereby defining both the tip (14/38) and deflection surfaces). *Id.* (citing Ex. 1032 ¶¶ 183, 39–40). An exemplary illustration of this model from Dr. Tucker's Declaration is reproduced below:

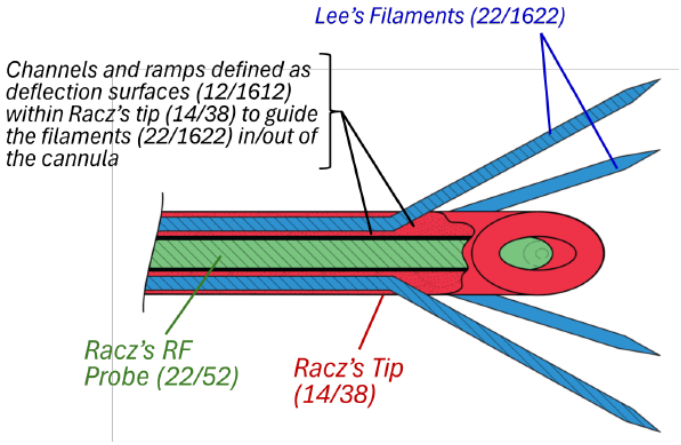

Illustration of an exemplary embodiment (Ex. 1032 ¶ 183)

Petitioner continues that, with respect to conveying RF energy, Racz discloses that "physical contact" between the electrical probe (52) and the cannula's distal tip (14/38) is an effective method of transmitting RF energy to the distal tip (14/38). Pet. 41 (citing Ex. 1009, col. 5, ll. 35–45). As discussed above, Lee discloses that its perimeter filaments (22/1622) are

electrically active and, when deployed, are guided out of the cannula's distal tip by physical contact with the deflection surfaces (themselves defined at the cannula's active tip (14/38)). *Id.* (citing Ex. 1010 ¶¶ 16, 18, 87, 91, 102, claims 8, 10). As shown in the example illustration provided by Dr. Tucker, (a detail of which is reproduced below) when Racz's exposed distal tip (14/38) is modified to include deflection surfaces (channels and ramps), the tip's deflection surfaces will physically contact the filaments (22/1622) to guide them as they are deployed and retracted from Racz's cannula. *Id.* (citing Ex. 1032 ¶ 184).

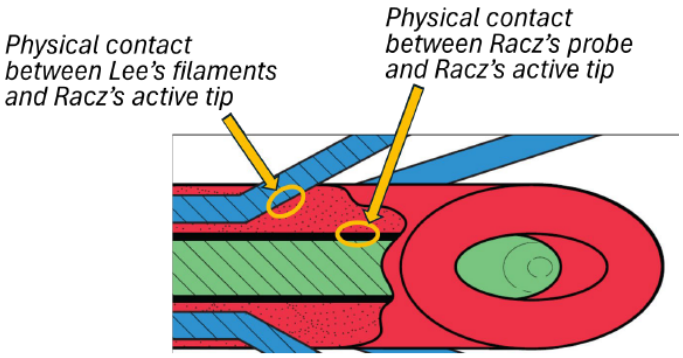

<u>An annotated detail of the preceding Figure (Ex. 1032, 184)</u>

Petitioner contends that, because Racz's probe (22/52), Racz's tip (14/38), and Lee's filaments (22/1622) are all constructed from conductive materials, the RF energy from Racz's probe (52) would be transmitted to the modified device's tip (14/38) and perimeter filaments (22/1622). Pet. 42 (citing Ex. 1009, cols. 4–5, ll. 60–1, col. 5, ll. 38–48, col. 7, ll. 43–50; Ex. 1010 ¶ 87, 92, 17; Ex. 1032 ¶¶ 185, 42). Specifically, argues Petitioner RF energy from the probe (52) would be transmitted by physical contact to the tip (14/38), and the tip (14/38)—which defines the deflection surfaces—would transmit RF energy by physical contact to the perimeter filaments (22/1622). *Id.* (citing Ex. 1032 ¶ 185).

Summarizing, Petitioner contends that Racz's cannula (10/33), as modified by a skilled artisan, to include Lee's perimeter filaments (22/1622), would include "a plurality of filaments" [1f] and be configured such that the RF probe (22/52) physically contacts a conductive portion of the needle to "thereby electrically connect the RF probe to the tip and the plurality of filaments, such that energy emitted by the RF probe passes through the tip and the plurality of filaments" [1j]. Pet. 42–43 (citing Ex. 1032 ¶ 186).

Petitioner argues further that the additional limitations in [1j] relating to the tip (14/38) and filaments (22/1622) operating together as a single monopolar electrode also would have been obvious. Pet. 43. According to Petitioner, a skilled artisan would have configured the tip (14/38) and perimeter filaments (22/1622) of Racz's modified device to operate together as a single monopolar electrode. *Id.* (citing Ex. 1032 ¶ 187). Petitioner asserts that Racz's tip (14/38) is configured to operate in a monopolar mode by providing a "reference electrode 30" that is electrically connected to a signal generator (28) and "in contact with the patient's body portion P." *Id.* (quoting Ex. 1009, col. 4, ll. 3–23, Fig. 1; Ex. 1032 ¶ 187). Furthermore, argues Petitioner, Lee discloses that its filaments (22/1622) "may be used in a monopolar fashion with … a return electrode being applied usually in the form a conductive pad in contact with a remote surface on the patient." *Id.* (citing Ex. 1010 ¶ 24).

Accordingly, argues Petitioner, a person of ordinary skill in the art would have understood that implementing Lee's perimeter filaments (22/1622) at Racz's monopolar tip (14/38), and electrically connecting the tip (14/38) and perimeter filaments (22/1622) by physical contact using internal deflection surfaces discussed above, would naturally result in the tip

(14/38) and perimeter filaments (22/1622) functioning together as a single monopolar electrode. Pet. 43–44 (citing Ex. 1032 ¶¶ 188, 76).

Finally, Petitioner argues, a skilled artisan would also have had a reasonable expectation of success in implementing this configuration, because both Racz and Lee disclose that a monopolar configuration is suitable for RF ablation procedures. Pet. 44 (citing Ex. 1009, col. 4, ll. 3–23, Fig. 1; Ex. 1010 ¶ 24; Ex. 1032 ¶¶ 189, 84-88). Petitioner contends that, in implementing Lee's filaments (22/1622) to expand and control the ablation volume of Racz's device, a person of ordinary skill in the art would have had no reason to deviate from Racz's monopolar configuration and would have been motivated to electrically connect Lee's filaments (22/1622) to function as a single monopolar electrode with Racz's tip (14/38). *Id.* (citing Ex. 1032 ¶ 189). Petitioner asserts that Racz's modified device would thus be configured "such that the RF probe, the tip, and the plurality of filaments operate together as a single monopolar RF electrode" as recited in limitation [1j]. Pet. 44.

h. [1g] and [1l]

With respect to limitations [1g] and [1l], Petitioner argues that Lee teaches that its perimeter filaments (22/1622) are configured to be adjusted between deployed and withdrawn positions. In the withdrawn position, the filaments are "housed wholly within lumen 20 of cannula 16" during insertion and withdrawal of the device. Pet. 44 (citing Ex. 1010 ¶ 92, 98–99, 106, 107, Figs. 1-3). According to Petitioner, when in the deployed position, filaments (22/1622) extend outwardly from the cannula (and distally beyond the cannula's tip) to define the ablation volume. *Id.* at 45. Petitioner points

to Lee's teaching that "variations in ablation volume may be achieved by varying the extent to which stylets are extended from the distal end of the trocar and the direction in which stylets extend." *Id.* (citing Ex. 1010 ¶ 129; Ex. 1010, Figs. 1, 48, 49; Ex. 1032 ¶¶ 190–191).

Therefore, Petitioner contends, a skilled artisan implementing Lee's filaments (22/1622) on the tip (14/38) of Racz's device would have been motivated to configure the filaments (22/1622) to be positioned distally beyond the tip (14/38) in a deployed configuration to expand the ablation volume of Racz's device, and to be positioned within the shaft (12/34) in a withdrawn configuration to enable effective withdrawal and insertion of Racz's modified device. Pet. 45 (citing Ex. 1032 ¶ 192).

Petitioner contends that, to adjust the filaments (22/1622) between the deployed and withdrawn positions, Lee teaches that its perimeter filaments (22/1622) "may be connected to suitable advancement and retraction mechanisms" (i.e., an actuator) that "may be of a conventional design." Pet. 46 (citing Ex. 1010 ¶ 106). Petitioner notes that Dr. Tucker, opines that a skilled artisan would have been motivated to connect Lee's perimeter filaments (22/1622) to an actuator that would not obstruct Racz's central lumen for the purpose of preserving the functionality of Racz's electrical probe (22/52) (e.g., a rotating actuator configured to rotate around Racz's central lumen). *Id.* (citing Ex. 1032 ¶ 193). Further, Petitioner argues, as Racz's hub (20/42/70) is fixed to the cannula's shaft (12/34) and the filaments (22/1622) must move relative to the shaft (12/34) to be withdrawn/retracted, movement of the actuator to adjust the filaments (22/1622) would necessarily be in first/second direction relative to the hub (20/42/70). *Id.*

Accordingly, Petitioner argues, and in view of the teachings of Lee, a skilled artisan modifying Racz's cannula (10/33) to include Lee's perimeter filaments (22/1622) would have been motivated to implement "an actuator" that is "interconnected to the plurality of filaments, wherein movement of the actuator in a first direction relative to the hub moves the plurality of filaments relative to the tip to a deployed position distally beyond the tip, and wherein movement of the actuator in a second direction relative to the hub retracts the plurality of filaments to a retracted position in which the plurality of filaments are disposed within at least a portion of the elongate member" [1g]. Pet. 47 (citing Ex. 1032 ¶ 194).

Referring back to its arguments with respect to limitations [1f] and [1j], a person of ordinary skill in the art could have implemented Lee's filaments (22/1622) in Racz's device by arranging the perimeter filaments, channels, and ramps around the inner perimeter of Racz's cannula (10/33) for the purpose of not obstructing the interior lumen of Racz's shaft (12/34). Pet. 47. According to Petitioner, this would preserve the functionality of Racz's electrical probe (22/52), which is needed to transmit RF energy to Racz's tip (14/38). *Id.* Petitioner contends that, in such a configuration, Racz's probe (22/52) would be insertable (and withdrawable) from the cannula (10/33) without interfering with filaments (22/1622) or their associated actuator. *Id.* (citing Ex. 1032 ¶ 195). Therefore, Petitioner asserts, the filaments (22/1622) would be adjustable between their deployed position and retracted position. *Id.*

Summarizing, Petitioner contends that a skilled artisan, modifying Racz's cannula (10/33) to include Lee's perimeter filaments (22/1622) would have configured the filaments (22/1622) and probe (22/52) such that

"when the RF probe is fully separated from the needle in a non-inserted state, such that none of the RF probe is within the needle, the plurality of filaments are movable *via* the actuator from the retracted position, in which the plurality of filaments are disposed within said at least a portion of the elongate member, to the deployed position" [1l]. Pet. 48 (citing Ex. 1032 ¶ 196).

III. CONCLUSION

After considering the evidence and arguments presented in the Petition, we determine that Petitioner has demonstrated a reasonable likelihood of success in proving that at least one challenged claim of the '688 patent is unpatentable. In particular, because Petitioner has demonstrated a reasonable likelihood that at least one claim is rendered obvious by the combination of Racz, Fitz, and Lee, as argued in Ground 1, we institute *inter partes* review as to all claims and all Grounds.

At this stage of the proceeding, the Board has not made a final determination as to the patentability of any challenged claim or the construction of any claim term. Thus, our view with regard to any conclusion reached in the foregoing may change upon consideration of Patent Owner's response on the merits and the completion of the record.

In keeping with our mission of resolving patentability disputes in a just, expeditious, and inexpensive manner, we exercise our discretion to institute *inter partes* review as set forth in the following Order.

IV. ORDER

Accordingly, it is

ORDERED that, pursuant to 35 U.S.C. § 314(a), an *inter partes* review of claims 1–17 and 48–52 of the ’688 patent is instituted with respect to all grounds set forth in the Petition; and

FURTHER ORDERED that, pursuant to 35 U.S.C. § 314(c) and 37 C.F.R. § 42.4(b), *inter partes* review of the ’688 patent shall commence on the entry date of this Order, and notice is hereby given of the institution of a trial.

PETITIONER:

Christopher Kelly
Gregory Carlin
Warren Thomas
Lee Hamilton
MEUNIER CARLIN & CURFMAN LLC
ckelly@mcciplaw.com
gcarlin@mcciplaw.com
wthomas@mcciplaw.com
lhamilton@mcciplaw.com

PATENT OWNER:

Matthew Phillips
Daniel Higgs
Kevin Laurence
Matthew Phillips
Derek Meeker
Joseph Hawkins
LAURENCE & PHILLIPS IP LAW
mphillips@lpiplaw.com
dhiggs@lpiplaw.com
klaurence@lpiplaw.com
dmeeker@lpiplaw.com
joe@hawkins-ip.com