UNITED STATES PATENT AND TRADEMARK OFFICE

_____

BEFORE THE PATENT TRIAL AND APPEAL BOARD

_____

AVANOS MEDICAL, INC.
Petitioner,

v.

STRATUS MEDICAL, LLC,
Patent Owner.

_____

IPR2024-01211
U.S. Patent No. 10,736,688

_____

PATENT OWNER'S RESPONSE
TO PETITION FOR *INTER PARTES* REVIEW

TABLE OF CONTENTS

TABLE OF AUTHORITIES iv

I. INTRODUCTION AND SUMMARY OF ARGUMENTS 1

II. BACKGROUND 2

A. RF Neurotomy 2

B. The ’688 Patent 5

C. Stratus’s Patent Family 11

D. Prosecution History 12

E. Commercial Products 13

F. Related Proceedings 17

1. Australian Litigation 17

2. United States Litigation 18

3. Related IPRs 18

G. The Petition and its Challenges 19

1. Racz 19

2. Fitz 19

3. Lee 21

4. Racz’s Modified Device 22

H. The Institution Decision 24

III. LEVEL OF ORDINARY SKILL IN THE ART 25

A. Pertinent Field of Art 25

B. Person of Ordinary Skill in the Art 27

C. Dr. Tucker’s Testimony Deserves Little Weight. 30

IV. ALL CHALLENGES FAIL BECAUSE OF FLAWS IN THE BASE RACZ-FITZ-LEE COMBINATION ("RACZ'S MODIIFED DEVICE").....32

A. Lee Is Not Analogous Art. 34

B. None of Racz, Fitz, and Lee Teaches Using an Insertable RF Probe to Energize Deployable Filaments. 35

C. Racz's Modified Device is Too Vague. 36

D. A POSITA Would Not Have Had a Reasonable Expectation of Success to Make or Use Racz's Modified Device. 42

E. Racz's Modified Device is Not Enabled. 48

F. Teaching Away From Racz's Modified Device 50

1. Racz teaches away from the addition of filaments. 50

2. If Racz's modified device has a straight tip, Racz teaches away from the modified device. 52

3. If Racz's modified device lacks anchors, Lee teaches away from the modified device. 55

G. Inadequate Motivation to Combine Racz, Fitz, and Lee.....56

H. The Teachings of Racz, Fitz, and Lee Would Not Have Led a POSITA to Racz's Modified Device.....57

V. ALL CHALLENGES RELYING ON YOUNG '965 FAIL. 58

VI. ALL CHALLENGES RELYING ON SCHEIBE FAIL. 59

VII. OBJECTIVE INDICIA OF NONOBVIOUSNESS 60

A. Long-Felt-But-Unmet Need 60

B. Copying 65

C. Praise 66

D. Commercial Success.....67

1. Commercial embodiments of invention.....67

2. Commercial success *per se* 68

3. Nexus.....72

VIII. CONCLUSION.....74

TABLE OF AUTHORITIES

Cases

Abiomed, Inc. v. White Swell Med. Ltd.,
IPR2021-01478, Paper 37 (Apr. 4, 2023).....28

Apple Inc. v. Samsung Elecs. Co.,
839 F.3d 1034 (Fed. Cir. 2016).....66

Beckman Instruments, Inc. v. LKB Produkter AB,
892 F.2d 1547 (Fed. Cir. 1989).....48

Belden Inc. v. Berk-Tek LLC,
805 F.3d 1064 (Fed. Cir. 2015).....37

Bendix Corp. v. Fed. Trade Comm'n,
450 F.2d 534 (6th Cir. 1971).....37

In re Bigio,
381 F.3d 1320 (Fed. Cir. 2004)..... 34, 35

Bristol-Myers Squibb v. Ben Venue Labs, Inc.,
246 F.3d 1368 (Fed. Cir. 2001).....48

CFMT Inc. v. Yieldup Int'l Corp.,
349 F.3d 1333 (Fed. Cir., 2003).....32

Cheese Sys. v. Tetra Pak Cheese & Powder Sys.,
725 F.3d 1341 (Fed. Cir. 2013).....36

Cisco Sys., Inc. v. C-Cation Techs., LLC,
IPR2014-00454, Paper 12 (Aug. 29, 2014).....41

Crocs, Inc. v. Int'l Trade Comm'n,
598 F.3d 1294 (Fed. Cir. 2010).....60

Dynamic Drinkware, LLC v. Nat'l Graphics, Inc.,
800 F.3d 1375 (Fed. Cir. 2015).....32

In re Gordon,
733 F.2d 900 (Fed. Cir. 1984)..... 33, 55, 59

Intelligent Bio-Sys., Inc. v. Illumina Cambridge Ltd.,
821 F.3d 1359 (Fed. Cir. 2016) 32, 37, 41

Kinetic Techs. Inc. v. Skywords Solutions, Inc.,
IPR2014-00530, Paper 8 (Sept. 29, 2014)..... 31, 33

KSR Int'l v. Teleflex Inc.,
550 U.S. 398 (2007)..... 32, 33, 36

Kyocera Senco Indus. Tools Inc. v. Int'l Trade Comm'n,
22 F.4th 1369 (Fed. Cir. 2022) 30

Leo Pharm. Prods., Ltd. v. Rea,
726 F.3d 1346 (Fed. Cir. 2013) 67

In re Magnum Oil Tools Int'l, Ltd.,
829 F.3d 1364 (Fed. Cir. 2016) 24, 32

NVIDIA Corp. v. Polaris Innovations Ltd.,
IPR2017-00382, Paper 10 (June 23, 2017) 41

Oakley, Inc. v. Sunglass Hut Int'l,
316 F.3d 1331 (Fed. Cir. 2003) 33, 42

Okajima v. Bourdeau,
261 F.3d 1350 (Fed. Cir. 2001) 28

In re Peterson,
315 F.3d 1325 (Fed. Cir. 2003) 33, 52, 54, 55

In re Ratti,
270 F.2d 810 (CCPA 1959)..... 33, 56, 59

Red Hat, Inc. v. Elecs. & Telecommc'ns. Research Institute,
IPR2019-00465, Paper 15 (June 13, 2019) 29

SAS Inst. Inc. v. Iancu,
138 S. Ct. 1348 (2018).....37

Scripps Clinic & Res. Found. v. Genentech, Inc.,
927 F.2d 1565 (Fed. Cir. 1991) 33

Tec Air, Inc. v. Denso Mfg. Mich. Inc.,
192 F.3d 1353 (Fed. Cir. 1999) 61, 68, 69

TriVascular, Inc. v. Samuels,
812 F.3d 1056 (Fed. Cir. 2016) 25, 58

Volvo Penta of Ams., LLC v. Brunswick Corp.,
81 F.4th 1202 (Fed. Cir. 2023) 72

In re Wands,
858 F.2d 731 (Fed. Cir. 1988) 48

In re Warner,
379 F.2d 1011 (CCPA 1967) 32

Windsurfing Int'l, Inc. v. AMF Inc.,
782 F.2d 995 (Fed. Cir. 1986).....65

Statutes

35 U.S.C. § 312 36

35 U.S.C. § 312(a)(3).....37

35 U.S.C. § 316(e) 32

5 U.S.C. § 554(b) 37

Regulations

37 C.F.R. § 42.104 36

I. INTRODUCTION AND SUMMARY OF ARGUMENTS

Stratus Medical, LLC hereby responds to the petition (Paper 1). This response is supported by expert declarations from Dr. Marc Russo (Ex. 2001, "Russo Decl.") and Peter Crosby (Ex. 2006, "Crosby Decl."), as well as Cody Jorgensen, Stratus's Chief Marketing Officer (Ex. 2015, "Jorgensen Decl.").

None of the prior art cited in the petition teaches an RF (radiofrequency) needle with both (1) deployable filaments and (2) an RF probe insertable into the needle to electrically energize the needle via physical contact with a conductive portion of the needle. Yet, the combination of those two elements is a distinguishing feature of the invention claimed in the '688 Patent per every independent claim. Prior to Stratus's invention, the prior art was limited to either (1) ***filament-less*** RF needles having an insertable RF probe that activates – via electrical contact between the probe and the needle – just the needle tip or (2) multi-tined devices ***lacking an insertable RF probe*** but instead activating conductive filaments by electrical connection at a proximal end of the device.

To reach the claimed invention, the petition must combine the teachings of at least three different references (Racz, Fitz, and Lee) in what the petition and its expert, Dr. Tucker, call "Racz's modified device." But, Racz's modified device is fatally vague, and to the extent it can be understood it is an unachievable design. The references' teachings would not have enabled a POSITA to make Racz's

modified device at all, let alone without undue experimentation. And, a POSITA would not have had a reasonable expectation of success in either making or using Racz's modified device.

Moreover, Lee, concerning RF ablation of uterine fibroids, is not analogous art to the Stratus Patents, Racz, and Fitz, all of which pertain to RF neurotomy. The petition attempts to sidestep that flaw (and Dr. Tucker's complete lack of experience in clinical neurotomy) by overbroadly defining the pertinent art to include all forms of RF ablation. That is not correct.

Additionally, Racz and Lee each teach away from Racz's modified device in various ways, and the petition's motivation for combining the teachings of Racz, Fitz, and Lee is flawed.

Finally, objective indicia show nonobviousness. Stratus's Nimbus® device, which embodies the claimed invention, has satisfied a long-felt need for an RF neurotomy needle that physicians can use more easily and more effectively, achieved commercial success, been praised by the industry, and copied by the petitioner.

II. BACKGROUND

A. RF Neurotomy

RF neurotomy treats pain by using RF energy to ablate a nerve to disrupt its ability to transmit pain signals to the brain. *See* '688 Patent Abstract. The target

nerves are tiny, "about 10 times thicker than a human hair," and RF neurotomy requires a high degree of precision to reach and properly ablate the target nerve, which are along the spine in "more than 99.5 percent of all RF neurotomy procedures." *See* Russo Decl. ¶¶ 111, 239.

RF neurotomy procedures are performed by interventional pain-specialist physicians, typically as an out-patient surgery in a pain-treatment clinic. *See id.* ¶¶ 78-80, 85. Most commonly, the target nerve is a medial branch nerve exiting the spine near a vertebra. *See id.* ¶¶ 85-88; '688 Patent 4:18-33. During a typical procedure, the patient lies face down on a table under sedation, while the physician inserts an RF neurotomy needle to place the needle tip near the target nerve. *See* Russo Decl. ¶ 108. Correct placement of the needle is verified as much as possible using X-ray flouroscopy before the needle tip is energized with RF energy to ablate the nerve. *See id.* ¶¶ 108, 126. Because the target nerves are so small and not visibile on X-rays and becaues anatomy varies from patient to patient, there is a risk that the ablation operation will miss the target nerve or not fully ablate the target nerve. *See id.* ¶¶ 241-245 (disagreeing with Dr. Tucker's assertion that dyes can be used to see nerves via X-ray), 174 (explaining risk that "that the relatively tiny nerve tissue targets are . . . missed during the ablation"). Moreover, a misplaced needle will cause unwanted ablation of non-target tissue. *See id.* ¶ 124.

RF neurotomy needles range in size from 16 to 22 gauge (1.651 mm – 0.718 mm external diameter). *See id.* ¶¶ 47, 158, 236; Crosby Decl. ¶ 228. Needles outside of this size range are unacceptable because they are either "too stiff to navigate within the constraints of the relevant anatomy" or "insufficiently stiff to navigate predictably and consistently to target nerves" and either "so large that they damage delicate anatomic structures through which they pass when being advanced to a target nerve" or "so delicate that they risk bending or breaking in manners that can damage tissue." *See* Russo Decl. ¶¶ 159-161.

An RF neurotomy procedure is not a permanent cure because ablated nerves can regenerate. *See id.* ¶ 178. Most patients experience some pain relief for "many months, and possibly a couple of years," and the procedure must be repeated periodically. *Id.* ¶ 114.

Because back pain is so common and because most patients receive multiple procedures, RF neurotomy procedures are performed in far greater numbers than any other type of RF ablation treatments. *See id.* ¶ 178. For example, whereas a cancer treatment center might do a handful of RF ablation procedures per year, Dr. Russo typically performs "10 to 15 RF neurotomy procedures per day." *Id.* ¶ 33.

RF ablation is used by other types of doctors to perform other types of procedures to ablate other types of tissue in other parts of the body to achieve other clinical objectives. *See id.* ¶ 177 ("The physicians in these different specialties live

in different professional worlds . . .”). But, as a practical matter, there is no overlap between RF neurotomy and other RF ablation treatments. *See id.* ¶ 76 (“[T]here has historically been little to no cross-talk between or cross-pollination of the various fields in which RF ablations are performed.”), ¶ 147 (same).

B. The ’688 Patent

The ’688 Patent discloses RF neurotomy systems that provide significant improvements in safety, performance, and ease of use over prior systems. *See id.* ¶ 201 (invention “allows interventional pain specialists to use a simplified technique to reach the target nerve, and also produces more optimally shaped lesions to capture target nerves in the facet joints and sacroiliac joints, with fewer heat cycles and with less heat damage to surrounding tissues”); *see also* ’688 Patent 15:66-16:16. As illustrated in Figure 2A of the ’688 Patent, for example, a specialized RF neurotomy needle 103 has deployable filaments 206a-b that expand an ablation zone relative to a tip 201 of the needle 103:

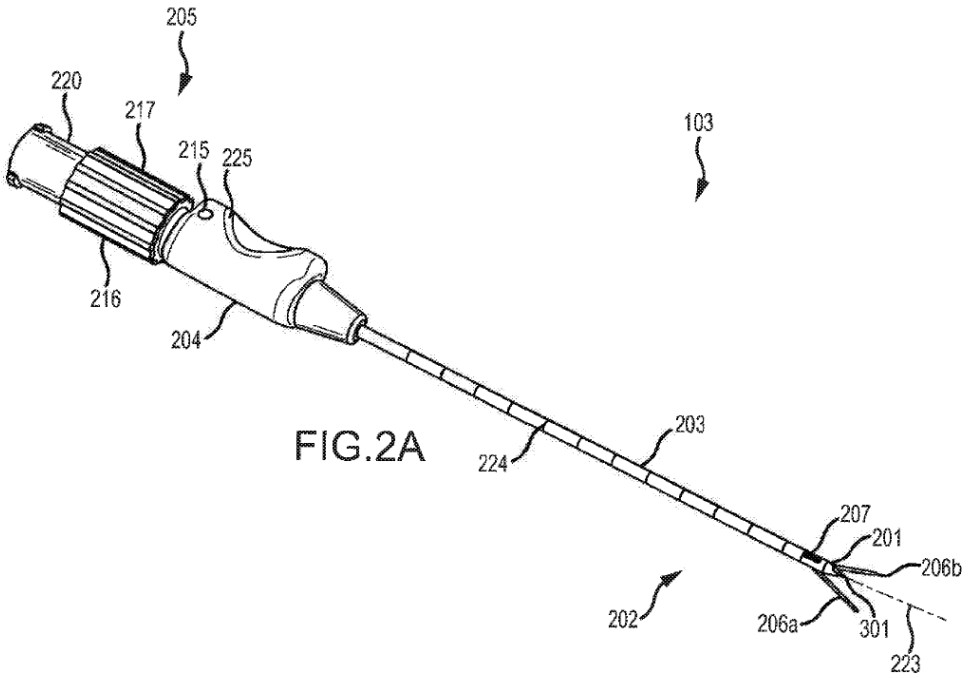

FIG.2A

The needle 103 employs an RF probe assembly 400, as illustrated in Figure 4 by way of example, that is connectable to an RF signal generator. *See* '688 Patent 4:66-5:7. The probe assembly 400 includes an RF probe 401 that is inserted into the needle 103. *Id.* In use, the RF generator delivers an RF signal to the RF probe assembly 400, and the RF probe 401 energizes the needle 103. *See id*. 24:17-26.

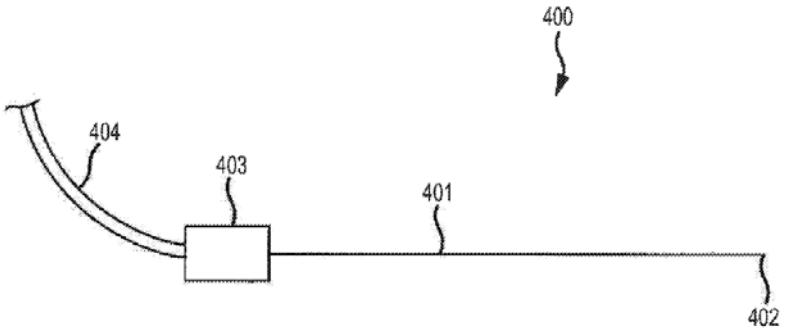

FIG.4

When the RF probe 401 is inserted and energized, both the tip 211 and the filaments 206a-b of the needle 103 emanate RF energy into the nearby tissue of the patient to heat and ablate a target nerve. *See id.* 24:17-30.

The needle 103 can also be used to inject fluid into the patient through the needle's lumen, such as when the probe 401 is absent from the lumen. *See id.* 7:34-50. This is useful in a typical RF neurotomy procedure to deliver anesthesia to the tissue before the ablation to reduce the pain caused by the ablation. *See* Russo Decl. ¶ 180, Crosby Decl. ¶ 95. After the drug delivery, the RF probe 401 can be inserted into the same lumen of the needle 103 to energize the needle 103.

As illustrated in Figure 11B, for example, a lesion 1011 formed by the ablation operation is advantageously larger and more advantageously shaped than those generated by standard RF neurotomy needles and extends beyond a distal point of the needle 103. *See* '688 Patent 22:9-44. When the needle 103 is placed perpendicular to the surface 1012 of a bone (*e.g.*, vertebra) over which a nerve (*e.g.*, medial branch nerve) is positioned, a wide lesion can be formed at that surface. This facilitates ablation of the nerve, as the exact position of the very small nerve along the surface can be unknown.

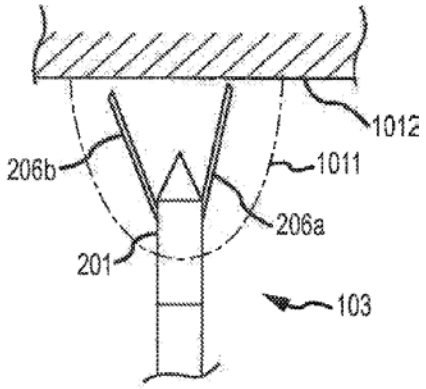

FIG.11B

’688 Patent Fig. 11B; Russo Decl. ¶ 121.

The improved size and shape of the ablation volume with the invention enable the physician to approach the target nerve from a perpendicular direction, rather than a parallel approach as with prior-art devices. *Compare* Russo Decl. ¶¶ 108-118 (describing prior-art parallel approach) *with id.* ¶¶ 119-127 (describing perpendicular approach possible with invention). The prior-art parallel approach

(illustrated below) often required "multiple repositioning steps" to ablate the nerve because "consistent optimal placement of the RF electrode, parallel and adjacent to the target nerve, was difficult, even for very experienced interventional pain specialists." Russo Decl. ¶ 110; see also '688 Patent 22:44-47; Tucker Dep. Tr. (Ex. 2020) at 149:7-14.

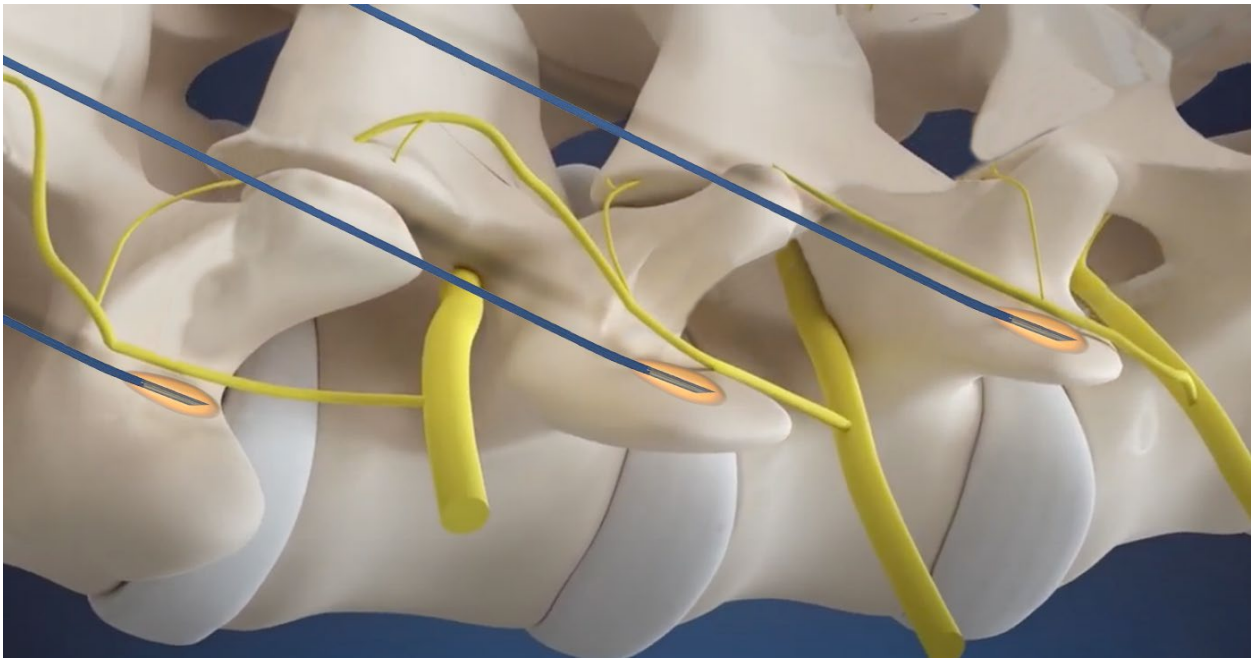

Russo Decl. ¶ 118 (illustrating parallel approach with prior-art needle).

But the perpendicular approach (illustrated below) made possible by the invention is "safer, faster, and easier to learn." *Id.* ¶ 123; *see also id.* ¶ 124 (explaining how "perpendicular approach is safer due to the presence of inherent anatomical safeguards."), ¶ 125 (explaining how perpendicular approach is faster "because it allows medial branch nerve ablation procedures to be completed with

fewer heat cycles and less damage to surrounding tissue"); ¶ 126 (explaining how the "perpendicular approach is also more easily learnt by interventional pain specialists than is the parallel approach because the so-called 'eye of the Scotty dog' can be used as a target point.").

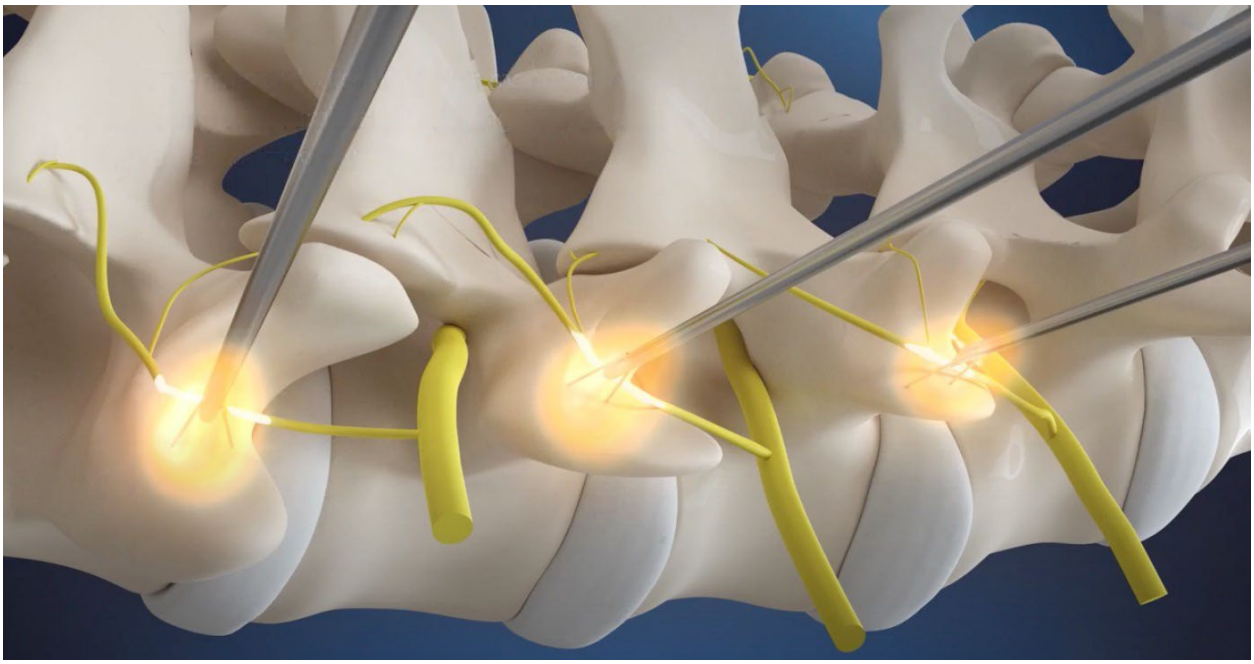

Id. ¶ 122 (illustrating perpendicular approach with invention).

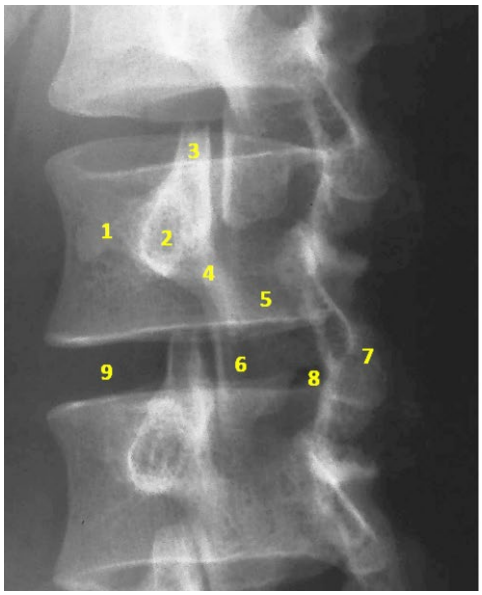

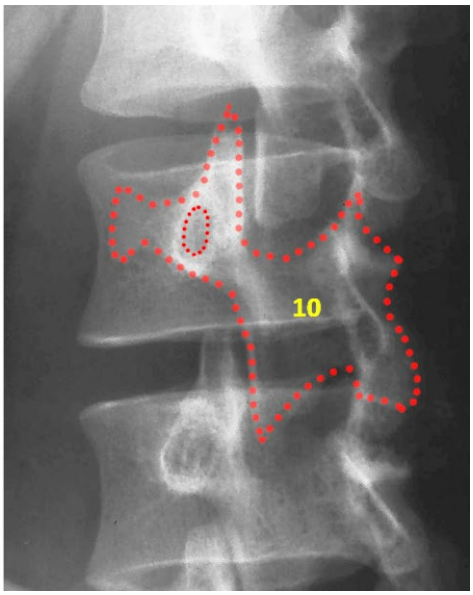

Id. ¶ 126 (illustrating "eye of the Scotty dog" target point for parallel approach).

Moreover, Dr. Russo has developed an improved "multifidus-sparing RF neurotomy technique (MSRFN technique)" using the Nimbus device that cuts by half the number of ablations and X-ray images needed and does not damage the multifidus muscle that runs along the spine. *Id.* ¶¶ 128-133. "The MSRFN technique is not possible with traditional RF needle cannulae that do not have expandable tines" but is well-suited for the invention. *Id.* ¶ 134.

C. Stratus's Patent Family

The '688 Patent is part of a family of related patents that includes the '664 Patent and the '782 Patent. These three patents are challenged by the petitioner in three other parallel IPRs. This patent family includes two subfamilies related by a common priority claim, as shown in the chart below, and have substantially overlapping disclosures. The full family is much larger than shown, as it includes additional provisional applications, pending applications, and issued patents, which have been granted in eleven countries. The three U.S. patents challenged in the IPRs are highlighted in yellow.

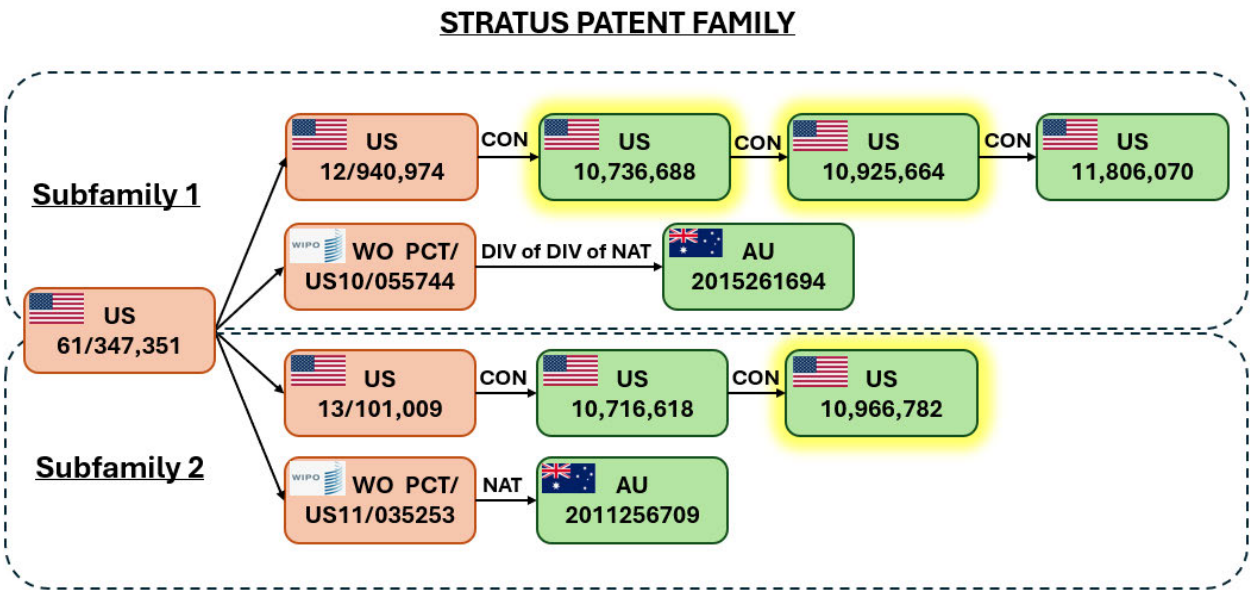

D. Prosecution History

The petition fails to acknowledge that the examiner considered Racz, Fitz, and Lee during prosecution of the ’688 Patent, *see* Ex. 1007 at 561, 567, 569, its child (U.S. Patent No. 10,925,664), *see* Ex. 1008 at 297, 303, 305, and its grandchild (U.S. Patent No. 11,806,070), *see* Ex. 2013 at 283, 290, 291. Further, a different examiner who allowed the two U.S. patents in Subfamily 2 considered Racz, Fitz, and Lee with respect to those patents. *See* Ex. 2012 at 558, 564, 566; Ex. 1006 at 345, 351, 353. All of the examiners who have considered Racz, Fitz, and Lee have recognized that those three references, individually and collectively, are not pertinent to the claimed invention. None of the examiners who have seen Racz, Fitz, and Lee ever imagined Racz’s modified device.

E. Commercial Products

Stratus markets a device known as the Nimbus® Multitined Expandable Electrode ("Nimbus device") and RF probes usable therewith that are covered by the '688 Patent. The Nimbus device (pictured below) is an FDA-approved RF neurotomy needle with deployable tines (or "filaments") as described in the '688 Patent. The needle includes a cannula having an active tip at its distal end. The tines are deployable at the distal end and extend beyond the distal point of the tip. The needle includes a Luer fitting at its proximal end via which fluids can be injected (*e.g.*, anesthetic or contrast fluid) or aspirated through the needle. The needle includes an actuator proximal to the main hub that is rotated in one direction to deploy the tines and in an opposite direction to retract the tines.

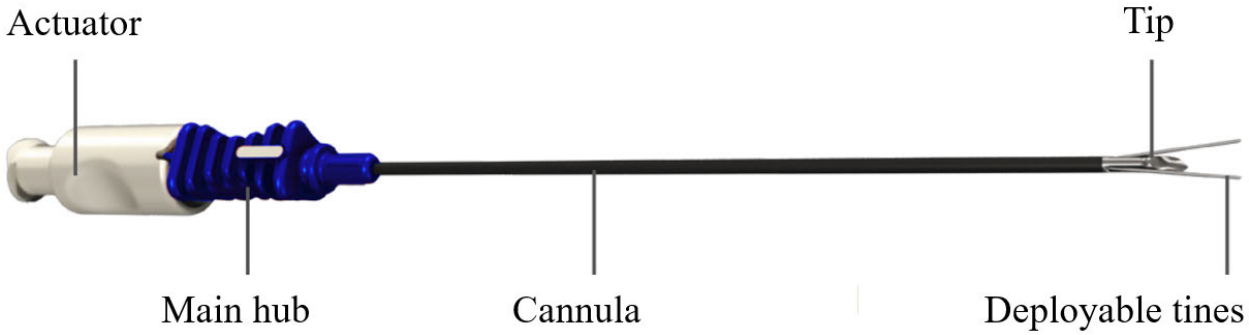

Stratus's Nimbus RF Neurotomy Needle

The needle is available in four basic varieties, each having a differently colored main hub. In all varieties, the cannula is 17 gauge, thus having an outer

diameter of approximately 1.5 millimeters. The working lengths of the various needles are 50, 100 (for two varieties), and 150 millimeters.

Stratus additionally sells both reusable and disposable varieties of RF probes (see below) that are insertable into the respectively sized Nimbus devices to energize the needle tip and tines. Accordingly, these are sold in 50-, 100-, and 150-millimeter lengths.

Stratus's Reusable RF Probe

Stratus's Disposable RF Probe

After the Nimbus device was commercialized, Diros Technologies, Inc. developed a copy of the Nimbus device known as the Trident™ R.F. Insulated Cannula ("Trident"), which is available in two models: standard (DTR), in which the RF probe that is removable from the needle, and "hybrid" (DTRH), in which the RF probe is permanently attached to the needle (collectively, the "Trident devices"). To secure FDA approval, Diros admitted that for both varieties of its Trident devices, the "expandable tip[is] equivalent to NIMBUS." Ex. 2019 at 8.

Like the Nimbus device, each of the Trident devices is an RF neurotomy needle having deployable tines. The Trident DTR is depicted immediately below. Like the Nimbus device, the tines are deployable at the distal end and extend distally beyond the point of the tip. The needle likewise includes a Luer fitting at its proximal end via which fluids can be injected through the needle. The needle also includes an actuator proximal to the main hub that is rotated in one direction to deploy the tines and in an opposite direction to retract the tines.

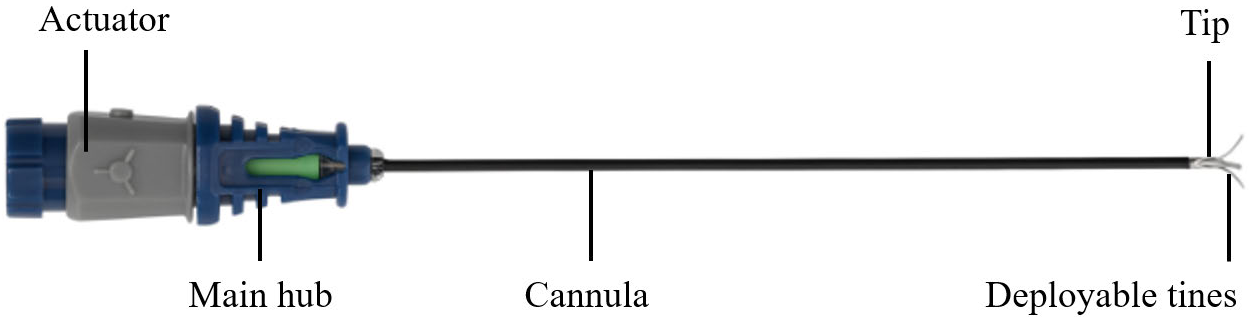

Diros's "Trident DTR" RF Neurotomy Needle

The Trident DTR needle is available in four basic varieties. In all varieties, the cannula is 18 gauge, thus having an outer diameter of approximately 1.3 millimeters. The working lengths of the various needles are 44, 90, 135, and 165 millimeters. Diros, like Stratus, also sells reusable and disposable varieties of RF probes (see below) that are insertable into the respectively sized Trident DTR devices to energize the needle tip and tines.

Diros's Reusable RF Probe

Diros's Disposable RF Probe

As previously mentioned, the hybrid Trident DTRH device is substantially identical to the Trident DTR, except that the RF probe is permanently attached to the needle (see below). To maintain the ability to inject fluids, the Luer port of the Trident DTRH is fluidically coupled with the needle via a tube.

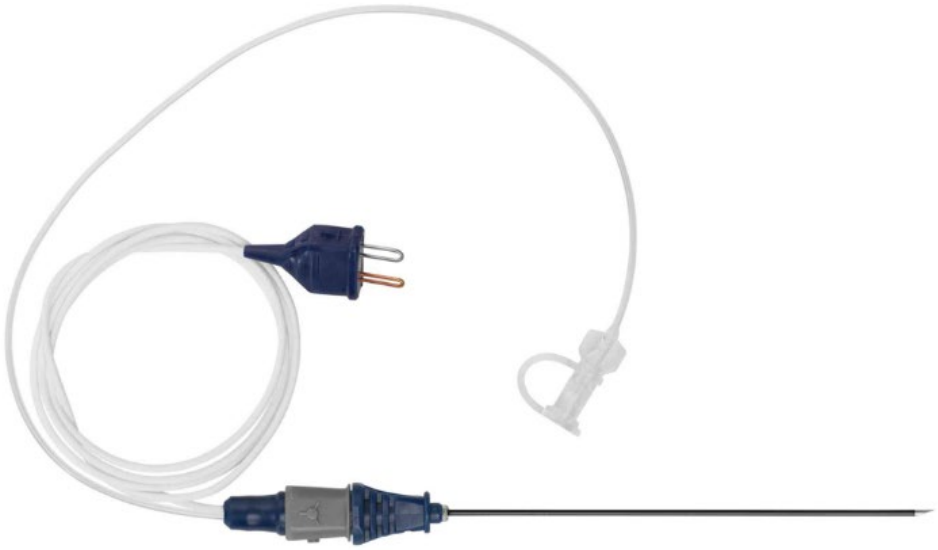

Diros's Trident™ DTRH "Hybrid" RF Neurotomy Needle with Probe

F. Related Proceedings

1. Australian Litigation

The Nimbus device was initially marketed almost exclusively in Australia. *See* Jorgensen Decl. ¶ 12. Stratus pursued an infringement suit against Diros based on Diros's attempt to introduce its Trident Devices into the Australian market (the Australian Lawsuit). *Id.* ¶ 43. In its defense, Diros alleged that Stratus's two asserted Australian patents would have been obvious over the prior art. *See id.*

The Australian Lawsuit settled under confidential terms. *Id.* ¶ 44. It is, however, publicly evident that Stratus's Australian patents remain in force and the Nimbus device continues to be sold and used in Australia, whereas the Trident devices appear not to have been sold in the Australian market since the termination of the Australian Lawsuit. *See id.* ¶¶ 45-46.

In mid-2023, the petitioner acquired Diros and began selling the Trident devices in the United States. *See* Jorgensen Decl. ¶¶ 50-51; Ex. 2011. The petitioner is a large publicly traded company that has long sold an RF neurotomy device known as COOLIEF*. COOLIEF* uses circulating fluid within its RF device to cool the region surrounding an exposed tip of an electrode during ablation, thereby enabling larger lesions. *See* Jorgensen Decl. ¶ 48. COOLIEF* is an expensive device, requiring a "specialized pump for circulating fluid through an electrode." *See id.*

[redacted] the Nimbus is able to provide enlarged lesions in a more cost-effective way, among other advantages. *See id.* ¶¶ 48, 49. The petitioner appears to have acquired Diros to try to compete more effectively against the Nimbus device.

2. United States Litigation

On or about May 2, 2025, Stratus sued the petitioner and Diros for infringement of the '688 Patent, *inter alia*, based on the petitioner's sales of the Trident Devices. *See* Ex. 2011.

3. Related IPRs

The petitioner has challenged the remaining claims of Stratus's '688 Patent in IPR2024-01211, all claims of Stratus's '664 Patent in IPR2024-01212, and 27 of Stratus's '782 Patent claims in IPR2024-01209. All IPR petitions were filed on the same day, and all trial schedules have the same due dates.

Every challenge ground of every IPR is based on the same proposed combination of Racz, Fitz, and Lee (*i.e.*, Racz's modified device). Additionally, each IPR includes challenges based on proposed combinations of those three base references with Young '965 and/or Scheibe. There is some variation of further reference combinations proposed in each IPR. Each IPR petition is accompanied by a declaration from Dr. Robert Tucker, a non-practicing pathologist.

G. The Petition and its Challenges

The petition presents 8 challenges (labeled A-H), all of which are based at least in part on Racz's modified device. Pet. at vi; Tucker Decl. (Ex. 1033) ¶ 15.

1. Racz

Racz discloses an RF neurotomy "needle or cannula" 10/33 with a shaft 12/34 and curved tip 14/38, which enables it to go around anatomical structures 16. *See* Racz 4:44-58. A shaft 54 of a removable electrical probe 22/52 is insertable in the cannula 10/33. *See id.* 5:26-30. The probe 22/52 connects to a signal generator 28/58 at its proximate end. *See id.* 37-45.

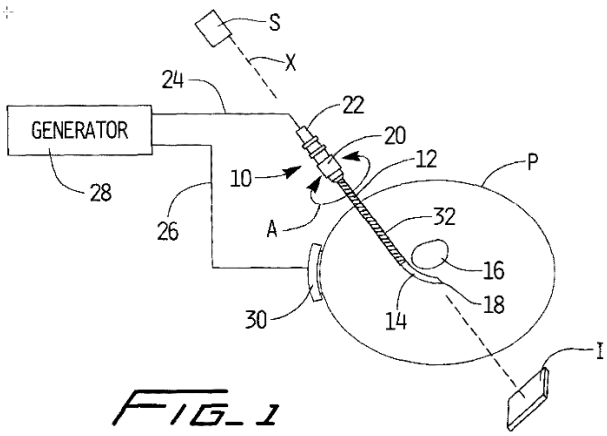

FIG. 1

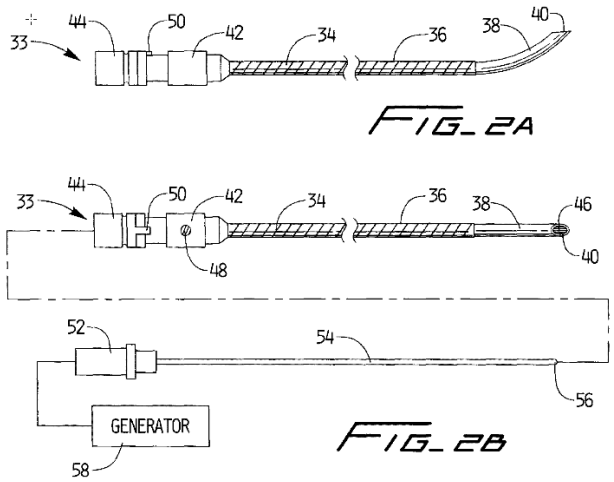

FIG. 2A

FIG. 2B

2. Fitz

Fitz illustrates various "introducers" for use in RF neurotomy. Fitz at Abstract. The introducers have one or more cannulas or sleeves in which electrodes are housed and along which the electrodes move longitudinally to deploy to increase

ablation volume. *See id.* ¶¶ [0001], [0009]. Fitz has just a few short paragraphs describing its various embodiments.

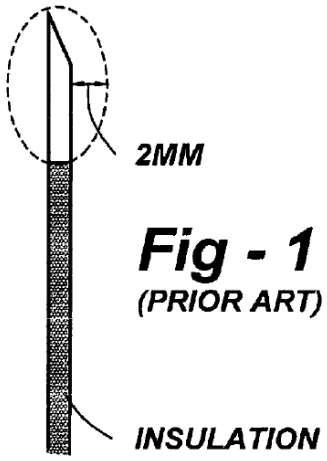

Fig - 1
(PRIOR ART)

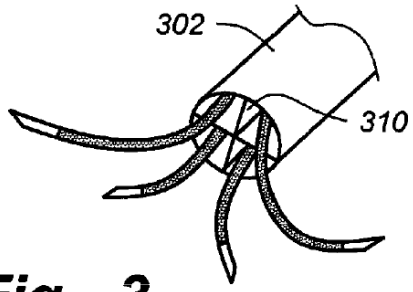

Fig - 3

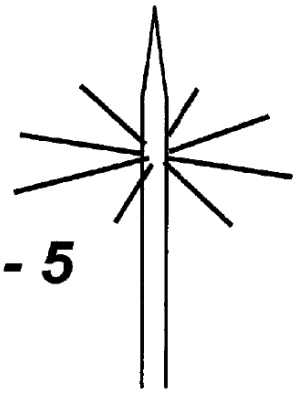

Fig - 5

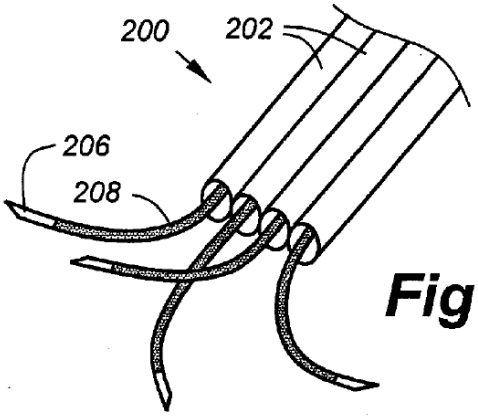

Fig - 2

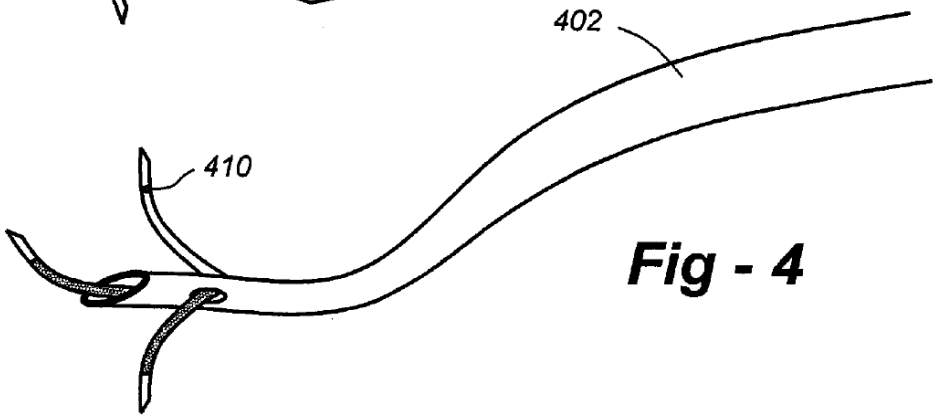

Fig - 4

3. Lee

Lee discloses a device for RF ablation of uterine fibroids, which are orders of magnitude larger than the nerves targeted by RF neurotomy. *See* Crosby Decl. ¶¶ 230-232; Lee ¶¶ [0001], [0031]. Lee's device has no RF probe but instead features several sharp-ended deployable conductive stylets 22 connected at the proximal end to an RF signal source and arranged to deploy radially outwardly and distally forward in a conical arrangement, as shown in Figure 1 (reproduced below, cleaned up with more legible reference numbers and better dashed line quality). *See id.* ¶ [0092]. Lee has a trocar point 14 connected to a distal end of a cannula 16. *See id.* ¶ [0091]. The stylets 22 extend down the cannula 16 and then through groove-like channels on the exterior of the trocar point 16. *See id.* Ramped deflection surfaces at the distal ends of those channels urge the stylets 22 outward as the stylets move distally past the deflection surfaces. *See id.* ¶ [0126].

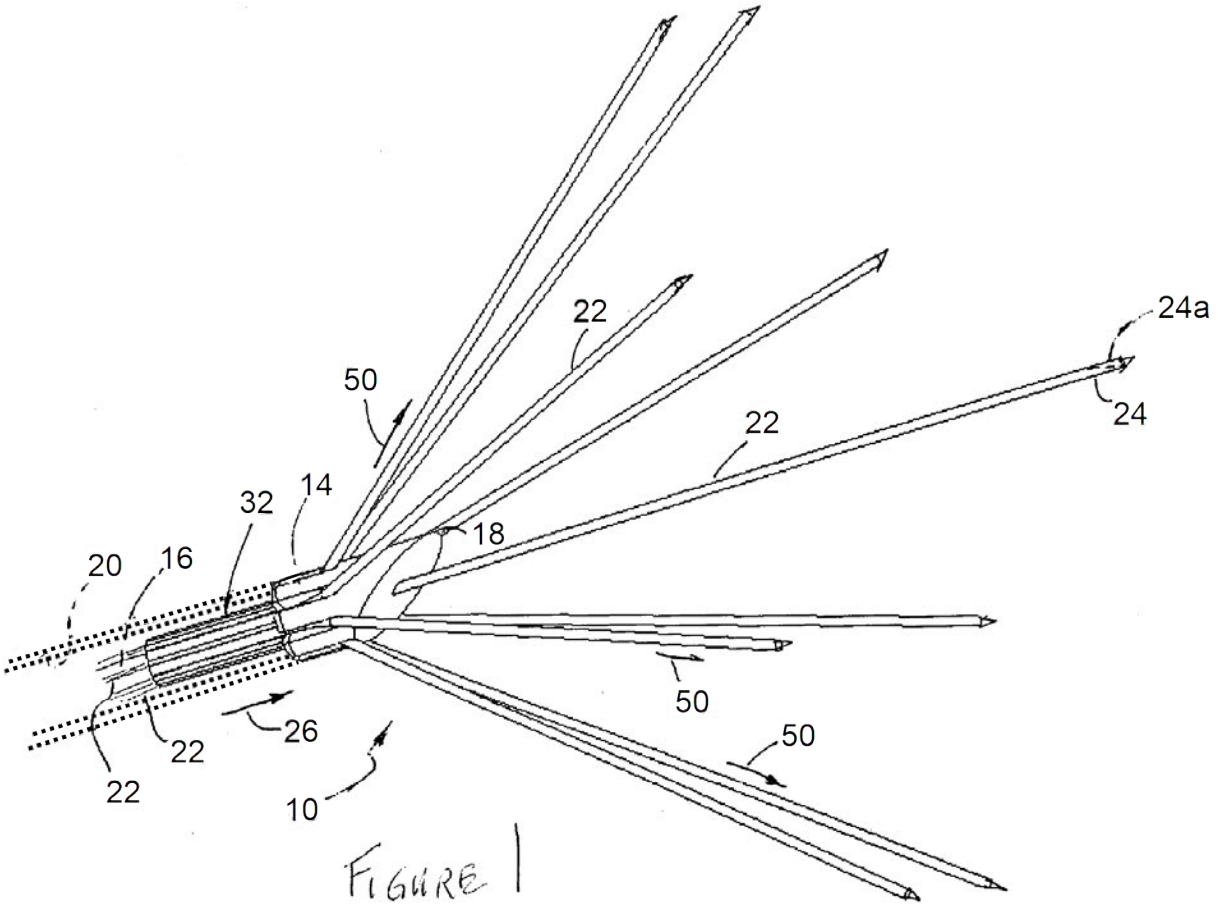

Lee also has deployable anchors located proximally from the tip. *See id.* ¶¶ [0089], [0095], [0104]. The anchors are deployed before the stylets 22 to hold the device in place against backward motion caused by deployment of the stylets 22. *See id.* ¶.

4. Racz's Modified Device

The petitioner and Dr. Tucker propose modifying Racz to have deployable filaments like Lee. They contend that this would have been motivated by Fitz. They illustrate "Racz's modified device" as follows:

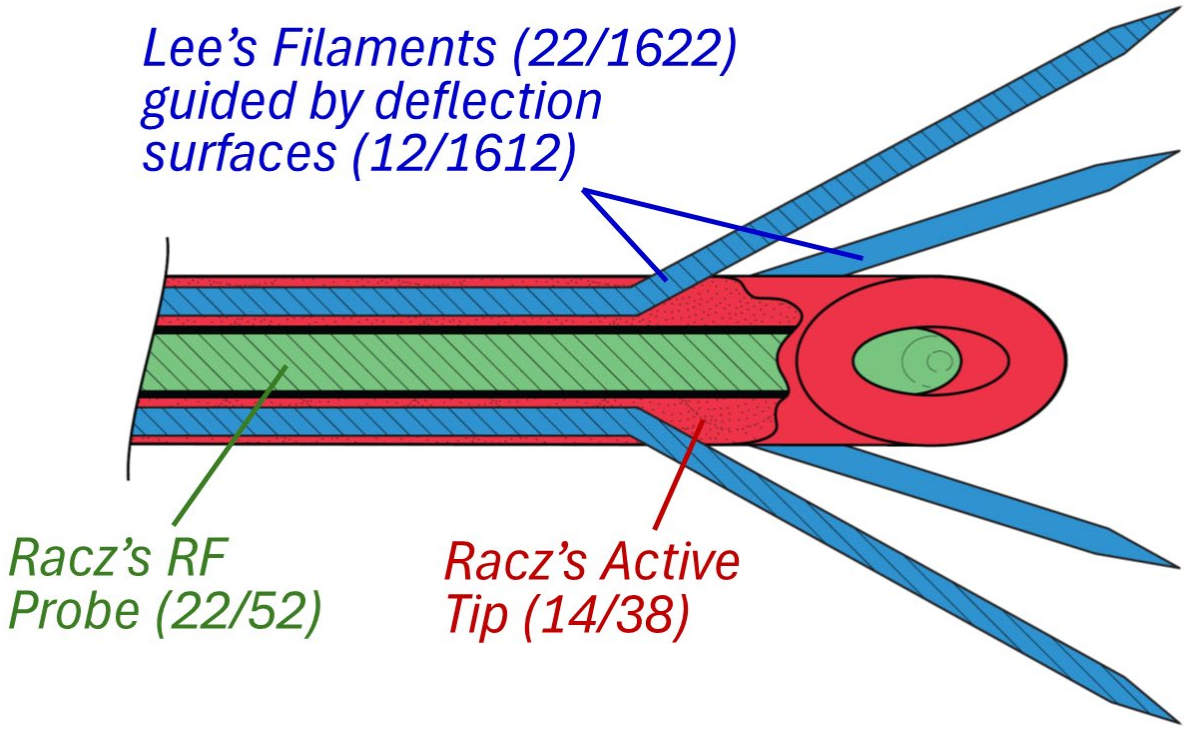
Lee's Filaments (22/1622) guided by deflection surfaces (12/1612)
Racz's RF Probe (22/52)
Racz's Active Tip (14/38)

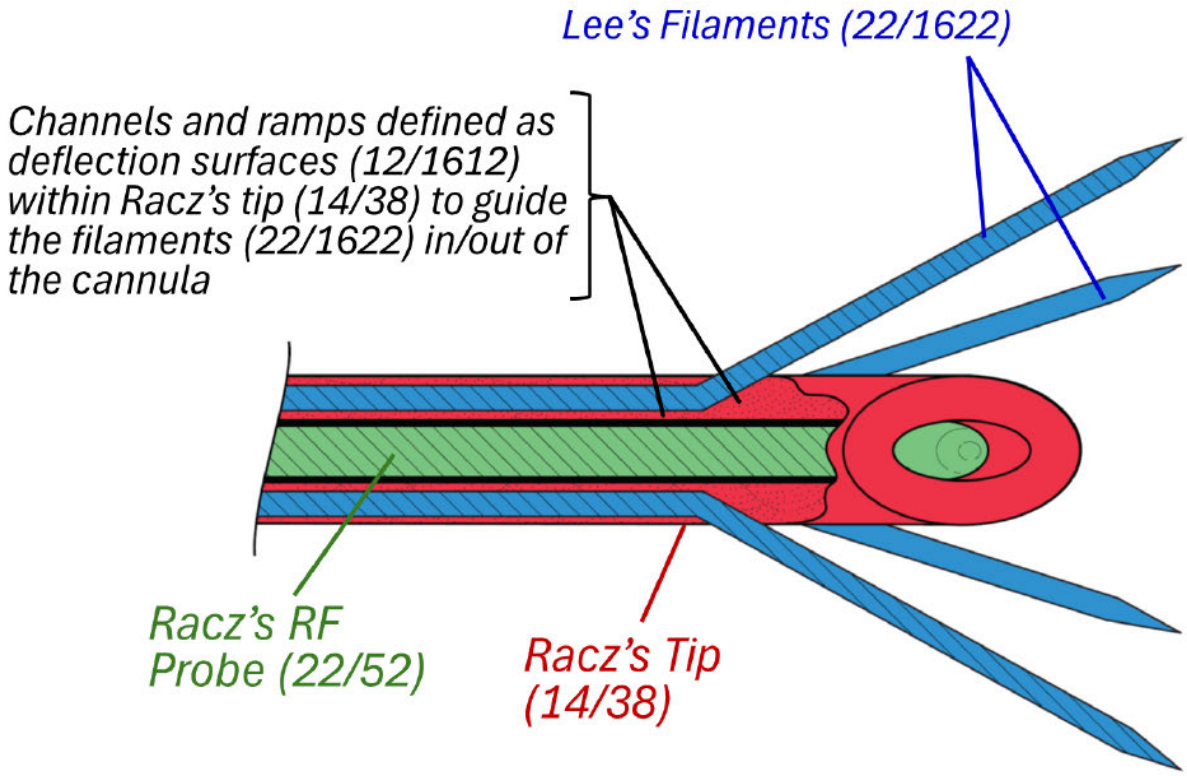
Lee's Filaments (22/1622)
Channels and ramps defined as deflection surfaces (12/1612) within Racz's tip (14/38) to guide the filaments (22/1622) in/out of the cannula
Racz's RF Probe (22/52)
Racz's Tip (14/38)

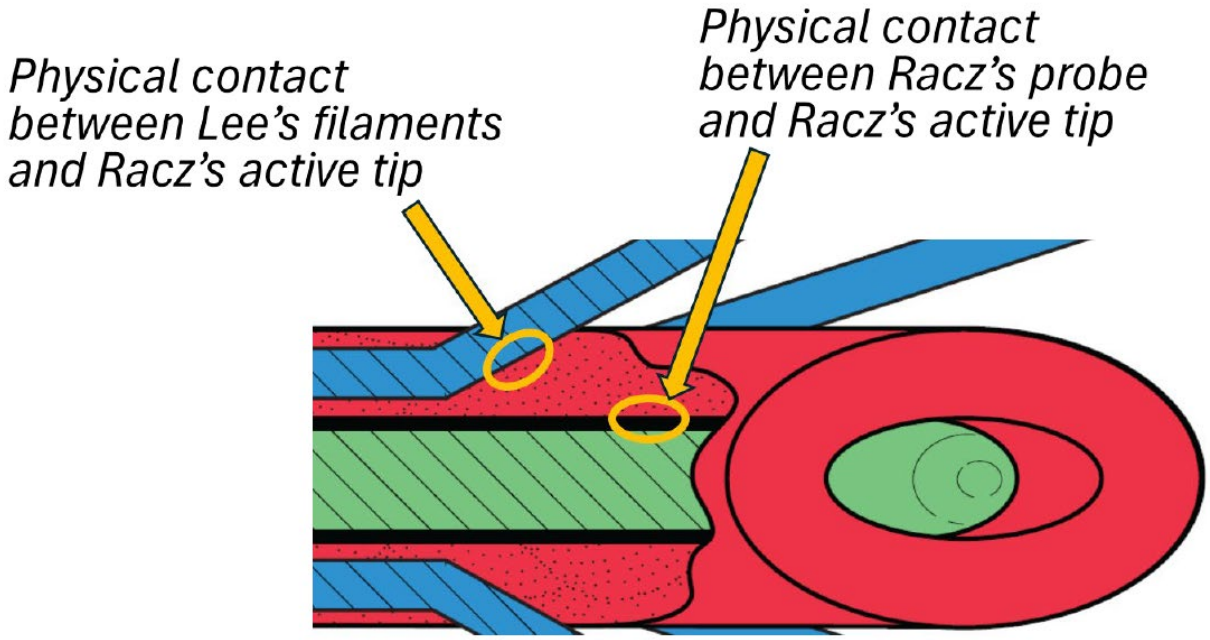

Pet. at 27, 43, 44; Tucker Decl. ¶¶ 157, 183, 184.

H. The Institution Decision

Stratus did not file a preliminary response, and the institution decision (Paper 9), based on an analysis of claim 1 such that as that presented in IPR2024-01210 and a single grouping of dependent claims, preliminarily found Challenge 1 (what the petition calls "A") reasonably likely to prevail with respect to at least one of claims 18-25, 27, and 29-33, which depend from claim 1, and on that basis instituted trial as to all claims and all challenges. The institution decision did ***not*** assess claims 26, 28, 34-47 or 53-74, or Challenges 2-8. The Board is now "oblig[ed] to assess the question anew after trial based on the totality of the record." *In re Magnum Oil Tools Int'l, Ltd.*, 829 F.3d 1364, 1376-77 (Fed. Cir. 2016); *see*

also Trivascular, Inc. v. Samuels, 812 F.3d 1056, 1068 (Fed. Cir. 2016) (at institution "Board is considering the matter preliminarily without the benefit of a full record. The Board is free to change its view of the merits after further development of the record, and *should do so* if convinced its initial inclinations were wrong.").

III. LEVEL OF ORDINARY SKILL IN THE ART

The petition and Dr. Tucker define the pertinent field of art overbroadly and proffer a flawed definition of a POSITA.

A. Pertinent Field of Art

The petition asserts that the relevant field is "thermal ablation systems and methods." Pet. at 11 (quoting '688 Patent at 1:16-20). But the central focus of the '688 Patent is RF neurotomy, which is one specialized field among many diverse and non-overlapping fields, like tumor ablation and cardiac ablation, within the broad class of RF ablation. The passage of the patent partially quoted by the petition states in full: "The present invention relates to thermal ablation systems and methods and, ***more specifically, to improved systems and methods for performing Radio Frequency (RF) neurotomy***. The invention is particularly apt for spinal RF neurotomy procedures." (emphasis added). *See also* Crosby Decl. ¶ 45 (quoting similar passage from '782 Patent and concluding "RF neurotomy is an indispensable part of the patent").

By failing to specifically include RF neurotomy, the petition's definition diverts attention to unrelated and inappropriate fields of RF ablation. As explained by Dr. Russo, RF ablation broadly encompasses many diverse, non-overlapping subfields involving different physicians treating different conditions in different parts of the body for different clinical purposes using different devices. *See* Russo Decl. ¶177; Crosby Decl. ¶ 47-49.

"There [are] no . . . generalist "RF ablation" medical practitioners." Russo Decl. ¶ 76. "[T]here [are] no . . . medical RF devices that are usable in all forms of RF ablation procedures." *Id.* "Nor are there RF generators . . . capable of use with all forms of RF ablation procedures." *Id.* "[T]he various RF devices and the RF generators that supply energy thereto are and have always been highly specialized and narrowly tailored for the procedures in which they are used." *Id.* That is certainly true of RF neurotomy, which is a unique and highly specialized subfield that has never had any meaningful overlap with other types of RF ablation.

Dr. Russo explains, "As a result, there has historically been little to no cross-talk between or cross-pollination of the various fields in which RF ablations are performed." *Id.* Dr. Russo has comprehensively studied the history of RF neurotomy, *see* Ex. 2004 (article), Russo Decl. ¶¶ 89-107 (summarizing article), and concludes that there has been a "lack of cross-pollination between RF neurotomy and other specialties, such as gynaecology, that employ RF ablation." Russo Decl.

¶ 147. Accordingly, it would be incorrect to define the pertinent field of art as RF ablation generally; rather, the pertinent field must specifically include RF neurotomy ablation systems and methods specifically.

B. Person of Ordinary Skill in the Art

The petition defines a POSITA as having the following:

> at least (i) a bachelor's degree in biomedical engineering, or a related field, such as mechanical engineering, biomechanical engineering, or bioengineering, who also has at least 3 years of experience with thermal ablation system [*sic*] and methods; or (ii) an advanced degree in the same areas of academic study with at least 1 years [*sic*] of experience with thermal ablation systems and methods.

Pet. at 11; Tucker Decl. ¶ 119 (same). Neither the petition nor Dr. Tucker (who restates what the petition says verbatim) provides any explanation of or justification for this definition; it is an entirely conclusory assertion.

This definition is flawed in several ways. First, as noted above, it is too general and fails to require knowledge of and experience with RF neurotomy systems and methods specifically.

Second, the petition's definition fails to recognize that the "systems and methods" are used and performed by physicians aiming to achieve clinical goals. As such, a POSITA cannot be an engineer working alone. *See* Tucker Dep. Tr. 26:22-

27:13 ("design isn't done by one person now" and noting need for someone with physician's perspective), 124:22-125:20, 156:14-157:13; *see also* Russo Decl. 138 ("process [of developing an improved RF neurotomy device] would begin with an interventional pain specialist, such as myself. This is because a detailed knowledge of the anatomy and physiology of pain pathways, and the sources and causes of different types of pain, as well as the existing RF neurotomy techniques, including the devices used to perform those techniques, would all have been essential to design an improved RF neurotomy device"); Crosby Decl. ¶ 54 ("[M]edical devices are always developed at least in consultation with the type of physician who would use the device. . . . Such a physician is an indispensable part of the development team . . ."). Thus, an appropriate physician should be included in the definition of a POSITA. *See Abiomed, Inc. v. White Swell Med. Ltd.*, IPR2021-01478, Paper 37 at 29-35 (Apr. 4, 2023) (defining POSITA for medical device patent as combination of "Clinician POSA" and "Engineer POSA").

Indeed, the inventors of the '688 Patent and all references at issue are physicians. *See Okajima v. Bourdeau*, 261 F.3d 1350, 1355, (Fed. Cir. 2001) (the level of ordinary skill in the art may be reflected in the prior art itself). In this case, the relevant physicians are pain-specialist physicians who perform RF neurotomy procedures. *See* Russo Decl. ¶ 138, Crosby Decl. ¶ 53.

Third, the petition's definition's reference to "experience" is vague; the nature of the "experience" is not specified. *See* Crosby Decl. ¶ 51.

Fourth, as noted by the institution decision, "at least" in the petition's definition is inappropriate. *See* Inst. Dec'n at 13; *Red Hat, Inc. v. Elecs. & Telecommc'ns. Research Institute*, IPR2019-00465, Paper 15 at 12 (June 13, 2019) (not including "at least" in definition of POSITA "to eliminate vagueness").

A better POSITA definitional framework is provided by Peter Crosby:

> [A] combination of (1) an interventional pain-specialist physician with significant experience performing RF neurotomy procedures and (2) an engineer with a degree in biomedical engineering or a related field and experience in the design and development of devices and methods for applying electromagnetic energy to nerves. The POSITA should have either a bachelor-level degree with three years of the design/development experience noted above or an advanced degree with one year of the design/development experience noted above. Such a POSITA could be a team of two or more people working together.

Crosby Decl. ¶ 58. Dr. Russo adds that the appropriate clinical experience performing RF neurotomy is three months. *See* Russo Decl. ¶ 142.

C. Dr. Tucker's Testimony Deserves Little Weight.

Dr. Tucker does not satisfy the definition of a POSITA as he lacks part (1), the requisite clinical physician perspective and understanding. Dr. Tucker, a pathologist, is not a pain-specialist physician and has never performed a neurotomy. *See* Tucker Dep. Tr. 10:19-12:20. In fact, he is not Board certified as a medical doctor at all. *See id.* Dr. Tucker even admitted that he, personally, could not create an RF neurotomy device without input from a neurotomy specialist. *See id.* 142:15-21 (to determine appropriate size for a neurotomy needle, "I would go out and canvass physicians that do this and ask them how big can you tolerate and how small can you tolerate."). As a result, Dr. Tucker's testimony should be given little weight. *See Abiomed,* IPR2021-01478, Paper 37 at 34-35 (according less weight to expert satisfying just one of two-part POSITA definition); *see also Kyocera Senco Indus. Tools Inc. v. Int'l Trade Comm'n*, 22 F.4th 1369, 1376-77 (Fed. Cir. 2022) ("To offer expert testimony from the perspective of a skilled artisan in a patent case . . . a witness must at least have ordinary skill in the art. Without that skill, the witness'[s] opinions are neither relevant nor reliable.").

Dr. Tucker's engineering experience, as applied to the present case, is also lacking with respect to part (2) of the POSITA definition above. In concocting "Racz's modified device," Dr. Tucker failed to make basic engineering calculations that a qualified POSITA would have. *See* Tucker Dep. Tr. 67:7-68:4 (performed no

engineering calculations regarding stylet deformation forces), 68:5-12 (none regarding stylet breakage forces), 90:8-11 (none regarding any aspect of the feasibility of Racz's modified device); *see also* Crosby Decl. ¶¶ 277-281. Indeed, in some instances, he disavowed responsibility for knowing engineering details important to the physical transformation of his paper design into reality. *See id.* 87:9-88:1-5 (regarding process for forming a tip: "Well, I'm not a manufacturing engineer . . . I think a person of ordinary skill in the art that's a manufacturing guy would know how to do that."), 130:6-131:18 (regarding limits for drilling channels into the sidewall of a metal cannula: "I don't know . . . I'm not . . . a manufacturing engineer."), 133:3-20 (regarding filament introduction into a cannula sidewall: "I'm not an industrial engineer.").

Dr. Tucker's testimony should be discounted for the additional reason that it largely parrots the petition. Large swaths of his declaration appear to be identical to or slight rewordings of petition passages. *See Kinetic Techs. Inc. v. Skywords Solutions, Inc.*, IPR2014-00530, Paper 8 at 13 (Sept. 29, 2014) ("Merely repeating an argument from the Petition in the declaration of a proposed expert does not give that argument enhanced probative value.").

IV. ALL CHALLENGES FAIL BECAUSE OF FLAWS IN THE BASE RACZ-FITZ-LEE COMBINATION ("RACZ'S MODIIFED DEVICE").

"In an [IPR], the burden of persuasion is on the petitioner . . . and that burden never shifts to the patentee. [I]f the fact trier of the issue is left uncertain, the party with the burden loses." *Dynamic Drinkware, LLC v. Nat'l Graphics, Inc.*, 800 F.3d 1375, 1378-79 (Fed. Cir. 2015) (citations and internal quotation marks omitted); *see also* 35 U.S.C. § 316(e). The petitioner must carry that burden by a preponderance of the evidence. *Magnum Oil Tools*, 829 F.3d at 1376-77.

Obviousness "requires a suggestion of all limitations in a claim." *CFMT Inc. v. Yieldup Int'l Corp.*, 349 F.3d 1333, 1342 (Fed. Cir., 2003), and "some articulated reasoning with some rational underpinning to support the legal conclusion of obviousness." *KSR Int'l v. Teleflex Inc.*, 550 U.S. 398, 418 (2007). The petitioner must supply the factual basis for the challenge and "may not resort to speculation, unfounded assumptions or hindsight reconstruction to supply deficiencies in its factual basis." *In re Warner*, 379 F.2d 1011, 1017 (CCPA 1967).

When the obviousness assertion involves a modification of a prior-art reference, the petitioner must also establish that a POSITA would have had a reasonable expectation of success to make the modification. *See Intelligent Bio-Sys., Inc. v. Illumina Cambridge Ltd.*, 821 F.3d 1359, 1367-68 (Fed. Cir. 2016). The modification must not "require a substantial reconstruction and redesign of the

elements" in a reference or "a change in the basic principles under which [a reference] was designed to operate." *In re Ratti*, 270 F.2d 810, 813 (CCPA 1959). Nor can the modification or combination render a reference unsatisfactory or "inoperable for its intended purpose." *In re Gordon*, 733 F.2d 900, 902 (Fed. Cir. 1984). Also, a *prima facie* case of obviousness may be rebutted "by showing that prior art teaches away from claimed invention in any material respect." *In re Peterson*, 315 F.3d 1325, 1331 (Fed. Cir. 2003). Obviousness cannot be established by hindsight combination to produce the claimed invention. *See, KSR*, 550 U.S. at 421 (warning against "the distortion caused by hindsight bias").

When expert testimony provides the factual basis for a challenge, testimony that is conclusory, at odds with the references, attempts to fill holes in the references, or merely parrots the petition should be accorded little or no weight. *See Oakley, Inc. v. Sunglass Hut Int'l*, 316 F.3d 1331, 1343 (Fed. Cir. 2003) (conclusory expert testimony is "facially deficient"); *Scripps Clinic & Res. Found. v. Genentech, Inc.*, 927 F.2d 1565, 1576 (Fed. Cir. 1991) ("The role of extrinsic evidence is . . . not to fill gaps in the reference."); Consol. Trial Practice Guide at 36 (Nov. 2019) (same); *Kinetic Techs.*, Paper 8 at 13.

All challenges in the petition are premised on "Racz's modified device," a particular modification of Racz's device to add deployable filaments (Lee's stylet's).

For the reasons given below, that modification suffers from numerous flaws and would not have been obvious.

A. Lee Is Not Analogous Art.

As explained in § III-A *supra*, the pertinent field of art must include RF neurotomy. Lee does not relate to neurotomy at all. Lee, therefore, qualifies as analogous art only if it is "***reasonably*** pertinent to the particular problem with which the inventor is involved." *In re Bigio*, 381 F.3d 1320, 1325 (Fed. Cir. 2004) (emphasis added).

According to the petition, that problem is limited ablation size. *See* Pet. at 2-3. That is an oversimplification. The problems solved by the Stratus Patents relate to the size, shape, and location of the ablation volume relative to the needle; the invention provides an ablation that is not just larger but with a superior shape that allows for a significantly better approach of the needle to the target nerve, resulting in more accurate ablation, a simpler more learnable procedure, faster procedure time, and improved safety. *See* '688 Patent 22:9-45; Russo Decl. ¶¶ 119-136.

Lee pertains to a different, non-overlapping field of RF ablation involving much larger structures, different target tissue, different physician users, different devices, different scale of devices, etc. The problem Lee sought to solve was sufficiently ablating uterine fibroid tumors, several orders of magnitude larger than nerves. *See* Russo Decl. ¶¶ 172-181; Crosby Decl. ¶¶ 153, 232. The Stratus Patents,

on the other hand, are directed at another problem: Getting an ablation field to reach "miniscule" "tiny" nerves with "surgical precision." Russo Decl. ¶¶ 83, 110, 174, 197, 219. The sufficiency-of-ablation problem in Lee is not reasonably pertinent to the miss-the-nerve problem solved by the Stratus Patents. As a result, Lee is not analogous to the '688 Patent.

The fact that Lee is not analogous art is fatal to all challenges in the petition. *See Bigio*, 381 F.3d at 1325 (prior art used in obviousness combination must be analogous). Alternatively, if Lee is considered to be analogous at all, it is only tenuously so, and Lee's teachings should be severely discounted as mostly irrelevant.

B. None of Racz, Fitz, and Lee Teaches Using an Insertable RF Probe to Energize Deployable Filaments.

Although Racz teaches an insertable RF probe to energize a needle at its distal tip, Racz does not teach or suggest deployable filaments. Although Fitz and Lee each teach deployable filaments, neither Fitz nor Lee teaches energizing those filaments using an insertable RF probe. What is missing from all three references are deployable tines that are energized by an insertable RF probe. That feature, which is recited in every independent claim of the '688 Patent, is beyond what the references themselves teach.

Perforce, no combination of what the three references actually teach could conceivably result in that missing feature. Only a tear-down and creative reconstruction of the references, as the petition has done, fueled by hindsight, could result in the feature missing from each reference. *See* Crosby Decl. ¶ 37. Because obviousness must be based on the actual teachings of the prior art, not a challenger's reconstruction using bits and pieces of the prior art, all challenges fail. *See KSR*, 550 U.S. at 421; *compare Cheese Sys. v. Tetra Pak Cheese & Powder Sys.*, 725 F.3d 1341, 1352 (Fed. Cir. 2013) (obviousness "cannot be based on the hindsight combination of components selectively culled from the prior art to fit the parameters of the patented invention."), *with* Tucker Dep. Tr. 90:17-92:9 (Tucker "read all of the Stratus patents prior to looking at the prior art" then combined "components" from that prior art into Racz's modified design.).

C. Racz's Modified Device is Too Vague.

An IPR petition must clearly and completely set forth its challenges. Such is required by both statute and regulation. *See* 35 U.S.C. § 312 (requiring petition to set forth challenge grounds "with particularity"); 37 C.F.R. § 42.104 (requiring petition to be "precise" and "with specificity"). As explained by the Federal Circuit:

> It is of the utmost importance that petitioners in the IPR proceedings adhere to the requirement that the initial petition identify "with particularity" the "evidence that supports the grounds for the challenge to each claim." 35

> U.S.C. § 312(a)(3). . . . Unlike district court litigation — where parties have greater freedom to revise and develop their arguments over time and in response to newly discovered material — the expedited nature of IPRs bring[s] with it an obligation for petitioners to make their case in their petition to institute.

Intelligent Bio-Sys., 821 F.3d at 1369. Indeed, the petition itself sets the parameters of the IPR and must be judged as written. *See SAS Inst. Inc. v. Iancu*, 138 S. Ct. 1348, 1355 (2018) ("[T]he petitioner is master of its complaint . . .").

Due process also requires that an IPR petition give adequate notice of its challenges. *See Belden Inc. v. Berk-Tek LLC*, 805 F.3d 1064, 1080 (Fed. Cir. 2015) (IPRs are formal agency adjudications subject to APA requirements); *see also* 5 U.S.C. § 554(b) (requiring timely notice of "the matters of fact and law asserted"); *Bendix Corp. v. Fed. Trade Comm'n*, 450 F.2d 534, 542 (6th Cir. 1971) (notice required by 5 U.S.C. § 554(b) must include "***clear*** statement of the theory on which a case will be tried." (emphasis added)).

But the requisite clarity, specificity, and particularity are lacking from the petition's description of Racz's modified device, the centerpiece of all challenges. As explained below, there are numerous omissions, ambiguities, and confusing aspects to Racz's modified device. *See* Crosby Decl. ¶¶ 182-201.

First, the petition and Dr. Tucker present just one partial view of Racz's modified device, from just one perspective:

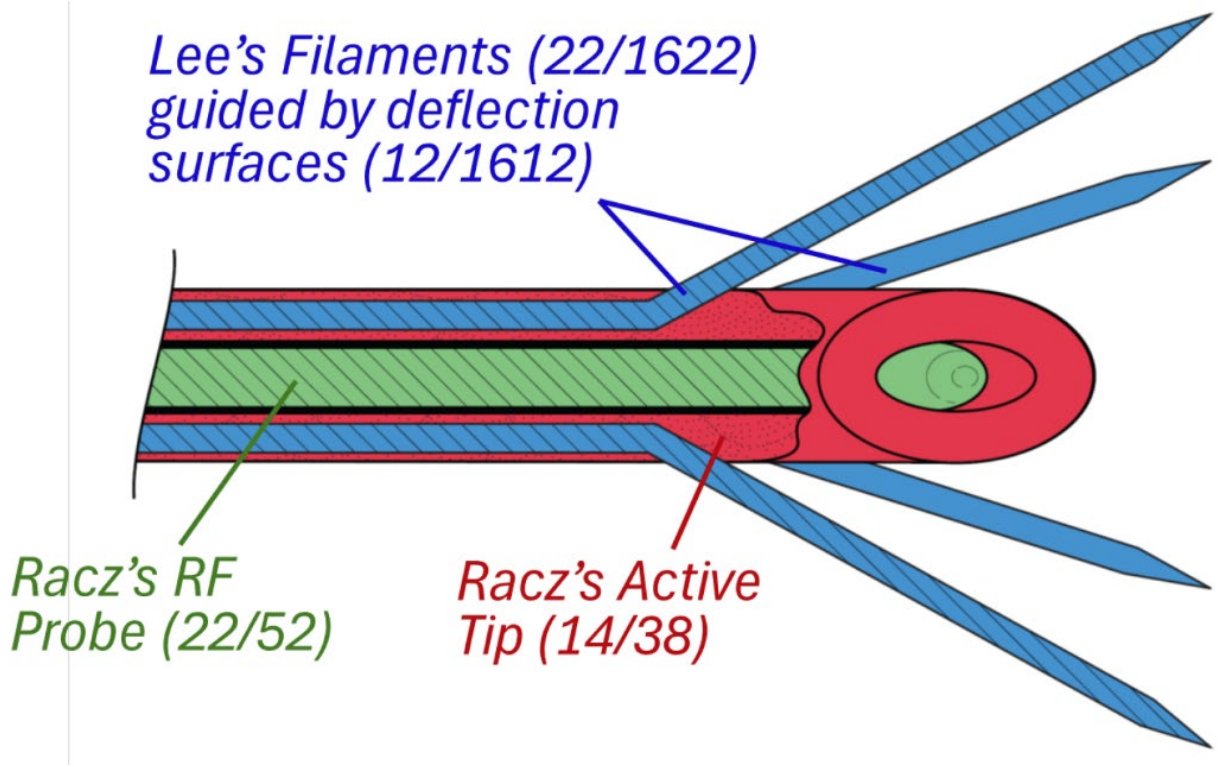

E.g., Pet. at 27; Crosby Decl. ¶ 182. No transverse side view (rotated 90°) or perspective/isometric view is provided. Nor is a view of the entire device provided. In fact, most of the substantial length of the needle is unillustrated; only a bit on the distal end is shown. Notably, the petition does not depict or describe the structure of Racz's modified device in the proximal direction (left) of the portion illustrated above. *See id.* ¶ 184. Nor is it apparent where the cutaway is intended to be according to this drawing, how many filaments are included, and where those filaments are located around the probe.

Second, no dimensions are provided. *See id.* ¶ 190. It appears that the thickness of the sidewall of Racz's cannula has been increased, but no explanation of that is provided. It also appears that the filaments fit snugly within the channels, but that relationship is not clear. The same can be said of the RF probe in the central lumen.

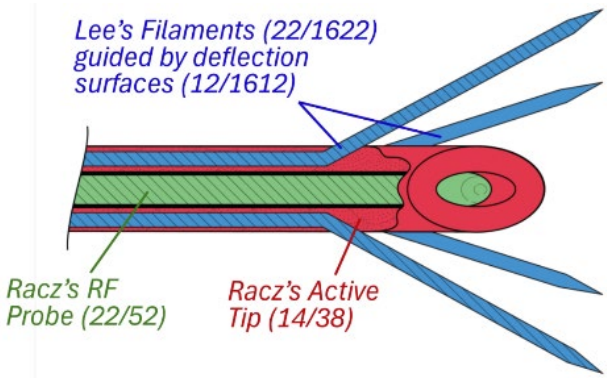

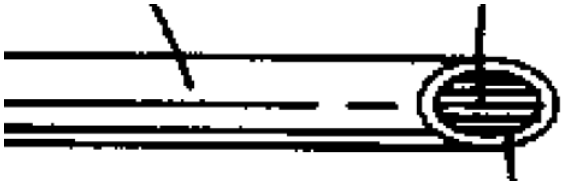

Third, there is uncertainty regarding the filaments and their channels. *See id.* ¶ 187. The filaments are shown in longitudinal channels in the cannula sidewall, but it is unclear how far proximally (left as shown above) those channels continue (*i.e.*, where those channels begin on the proximal end) or how the filaments enter those channels. Nor is there any description of how those channels are made, as discussed at length below.

Fourth, it is unknown whether the tip remains bent, as taught by Racz, or has been straightened to accommodate the filaments in Racz's modified device. *See id.* ¶ 191. Dr. Tucker doubled-down on this ambiguity during his deposition, asserting that Racz teaches that the degree of curvature could be varied so as to be zero. *See*

Tucker Dep. Tr. 46:16-48:3. Dr. Tucker's interpretation of Racz in this respect is wrong, as explained in the next subsection.

Fifth, it is unknown whether Racz's modified device includes anchors, which Lee says are necessary to prevent backward migration of the needle when Lee's filaments are deployed. *See* Crosby Decl. ¶ 184.

Sixth, it is also unknown, for example, whether the filaments are electrically connected to an RF signal source, as taught be Lee, or not, as that may be unnecessary in view of Racz's RF probe. *See id.* ¶ 188.

Seventh, it appears that no features of Fitz are incorporated into this modified device, but that is not clear. *See id.* ¶ 193.

Eighth, Dr. Tucker refers to two examples of Racz's modified device, but the differences between them are not clear. Nor is it clear from the petition or Tucker's declaration if there are other (unillustrated) examples that he or the petitioner intends to rely upon. *See id.* ¶¶ 195-197; *but see* Tucker Dep. Tr. 112:9 to 113:5 (admitting he did not describe or even consider other examples of Racz's modified device).

These are just some of the many ambiguities, omissions, and lack of clarity that frustrate Stratus's ability to meaningfully respond to the petition. It would be unfair for the petitioner to fill the gaps and resolve the ambiguities in its reply.

To be clear, the requisite clarity and completeness describing Racz's modified device must be in the petition. *See Intelligent Bio-Sys.*, 821 F.3d at 1369. To the extent that Dr. Tucker's declaration contains additional detail, that cannot cure the petition's deficiencies. *See Cisco Sys., Inc. v. C-Cation Techs., LLC*, IPR2014-00454, Paper 12 at 7-10 (Aug. 29, 2014) (informative, expanded panel) (prohibiting incorporation by reference from expert declaration into petition). Incorporation by reference subverts the Board's word limits. *Id.* 9-10.

Moreover, Dr. Tucker's declaration is itself vague, ambiguous, and incomplete in its description of Racz's modified device. *See* Crosby Decl. ¶¶ 182-197 (detailing many uncertainties); *see also NVIDIA Corp. v. Polaris Innovations Ltd.*, IPR2017-00382, Paper 10 at 20, 21-22 (June 23, 2017) (dismissing expert testimony that "does not provide sufficient explanation or supporting evidence" and is "too vague").

Finally, Dr. Tucker's deposition testimony, which is two steps removed from the petition, also cannot cure the petition's deficiencies regarding Racz's modified device. Besides, his deposition testimony did not add clarity; it instead added confusion. *See* Crosby Decl. ¶ 198 ("I am in no better position to understand Racz's modified device after his deposition than before. His explanations were not clarifying. Instead, his explanations muddied aspects the Racz's modified device that I thought I understood from his declarations and raised new questions.").

D. A POSITA Would Not Have Had a Reasonable Expectation of Success to Make or Use Racz's Modified Device.

In this case, the petition asserts that a POSITA would have had a reasonable expectation of success in achieving Racz's modified device. *See* Pet. at 27, 37, 46 (citing Tucker Decl. ¶¶ 162, 175, 189). The sole support for that assertion is Dr. Tucker's bald conclusion, which is entitled to no weight. *See Oakley*, 316 F.3d at 1343 (Fed. Cir. 2003). The lack of any meaningful showing of a reasonable expectation of success in the petition is dispositive in this case.

Nonetheless, although Stratus need not put forward any evidence of the lack of a reasonable expectation of success, Stratus does so via the testimony of Peter Crosby, who first explains in considerable detail the impediments a POSITA would encounter trying to ***make*** Racz's modified device. *See* Crosby Decl. ¶¶ 273, 221-260. As explained by Mr. Crosby, Racz's modified device "would be either impossible to fabricate or doing so would require undue experimentation and have no reasonable expectation of success. It is relatively easy to create a drawing, or as Dr. Tucker calls it, a 'cartoon,' but that does not translate into ease of building what is drawn." *Id.* ¶ 221, quoting Tucker Dep. Tr. 112:5; 123:6.

For example, the channels for the filaments "would be extremely challenging, if not impossible, to fabricate. That is true even assuming that the tip in Racz's modified device is straight; it would be even more difficult to fabricate if the tip is

bent or curved, as emphatically taught by Racz." *Id.* ¶ 225. If reduced to a size suitable for RF neurotomy, those channels would be so long and thin that there would be no reasonable expectation of success to make them. At its largest an RF neurotomy needle would be 16 gauge, with a 1.65-mm outer diameter and 1.19-mm inner diameter, meaning that the sidewall is 0.22 mm thick. Crosby Decl. ¶ 235; Russo Decl. ¶¶ 158-160, 230-236. The channels must be notably smaller in diameter, and the filaments must be smaller still in diameter. A POSITA simply would not reasonably expect to be able to successfully make such narrow channels of any appreciable length, as would be required to make Racz's modified device in any form.

Although the petition and Dr. Tucker do not describe how to make the channels, other than bald assertions of "routine engineering," Peter Crosby has considered every way that a POSITA might reasonably consider to do so and concluded that a POSITA would have no reasonable expectation that any such way would succeed. *See id.* ¶¶ 235-245 (drilling, including laser drilling, cannot achieve such thin long holes and the resulting drilled sidewall would be too weak structurally), ¶ 246 (drawing: "no commercially available material or process that would allow [drawing] at the dimensions required for Racz's modified device"), ¶ 248 (casting or sintering: "a POSITA could not have done so and would have dismissed that possibility, as neither technique is capable of the small dimensions

and accuracy required"), ¶ 249 (injection molding would not work because of "fundamental limits to the size and geometry of features that can be created with injection molding – partly determined by the fluid mechanical properties of molten plastic"), ¶ 250 (extrusion: only possible "much bigger than the required dimensions"), ¶ 252 (extrusion is not possible for a separate tip piece that "does not have a uniform cross section along its length"); ¶ 251 (3D printing cannot create such small features and is only possible "at resolutions much bigger than the resolution required by the Racz modified device"). In each case, Mr. Crosby concludes that the challenge would be too great for a POSITA to have a reasonable expectation of success.

Mr. Crosby explains that the challenges would be too great for a straight tip, as taught by Lee, and considerably more difficult for a curved tip, as required by Racz. *See id.* ¶ 244 ("There is no known drill or drill bit that could drill a curved hole, certainly not at the scale and precision required for Racz's modified device"). Mr. Crosby even considered the possibility of fabricating the device in a straight form and then bending it. *See id.* ¶ 247 ("The bending operation would distort the shape of the channels causing them to lose the necessary circular shape in the vicinity of the bend. . . . [T]he bending-induced distortion of the channels would inhibit fully or partially the filaments from passing through the channels").

Mr. Crosby explains that a POSITA would face the same or similar challenges trying to construct Dr. Tucker's second example of Racz's modified device and thus also have no reasonable likelihood of success making the second example. *See id.* ¶¶ 255-259 (explaining challenges in aligning the two pieces, uncertainty of the interface between the two pieces, how the tip piece appears to be of such length that its channels could not reasonably be expected to be formed just as with the first example, and how the tip portion is curved, presenting additional, insurmountable challenges).

Mr. Crosby even considers the possibility that Racz's modified device is made of conductive plastic rather than metal, an idea Dr. Tucker first revealed during his deposition. *See id.* ¶ 254 (citing Tucker Dep. Tr. 129:19-130:15). Mr. Crosby concludes that "would have required a lot of experimentation with no reasonable expectation of success, and would have been unlikely to yield a useable device that is both biocompatible and stable." *Id.*

Dr. Tucker's frequent references to "routine engineering," *see* Tucker Decl. ¶¶ 157, 158, 160-162, 175, 179, 189, do not give Racz's modified device a reasonable expectation of success. Nor do his statements that various aspects of Racz's modified device would have been "easily implemented," "easily formed," or "easily accommodated." *See id.* ¶¶ 151, 154, 160, 181, 183. Dr. Tucker does not define, explain, or provide any examples of "routine engineering," *see* Crosby Decl.

¶ 223, and his invocation of "routine engineering" is nothing more than a conclusory assertion that deserves no weight. Besides, as explained by Mr. Crosby, Dr. Tucker "has misused the term 'routine engineering' and has wrongly injected into that term some amount of creativity to fill in important missing details." Crosby Decl. ¶ 199.

In cobbling together Racz's modified device, Dr. Tucker was unconcerned with whether or how his design would actually be manufacturable—in his mind, this was immaterial since none of Racz, Fitz, or Lee are "manufacturing patents." *See, e.g.*, Tucker Dep. Tr. 87:9-88:5; 158:20-159:13; 177:16-178:9. Dr. Tucker's exasperation from questioning on how to move his "cartooninsh" concoction, *see id.* 112:3-6; 123:5-7, from paper into practice was evident: "Man, Matt, come on. This is not a manufacturing patent. Some of these are details left to the engineer. How to make it." *Id.* 129:15-130:8. And yet Dr. Tucker knows firsthand that paper designs are not necessarily manufacturable: "I have been associated with companies that have got patents that can't follow their own patents because it's not manufacturable. I've seen that happen." *See id.* 179:8-180:8.

In conclusion, regarding a reasonable expectation of success making Racz's modified device, the petition has grossly underappreciated the challenges and presented no meaningful evidence, whereas Stratus has produced detailed evidence credibly showing that a POSITA would not have had a reasonable expectation of success making Racz's modified device.

Moreover, a POSITA would not have had a reasonable expectation of success ***using*** Racz's modified device. At the scale of neurotomy, filaments that must be smaller than the sidewall thickness of a 16-gauge (maximum) needle and made of medical-grade metal would be so fragile that the risk of bending unpredictably, permanently deforming, or possibly breaking within the patient's body would defeat any reasonable expectation of success. *See* Crosby Decl. ¶¶ 277-282 (calculating that a force of just one ounce would exceed such filaments' yield strength).

As explained by Dr. Russo, "I and other pain doctors would have serious concerns regarding the performance characteristics of tines that are sufficiently small to pass through channels within the sidewall of a 16-to-22 gauge needle. Tines having such a small cross section present significant risks of being damaged or deflected." Russo Decl. ¶ 215; *see also id.* ¶ 217 ("I do not view filaments that are this thin as translating to clinical human safety."); ¶ 218 (noting appreciable "risk of breaking off within a patient, particular in the vicinity of nerves. The risk of breakage is heightened near bone, which is where spinal and other forms of RF neurotomy procedures are performed."); ¶ 220 ("bending of such small tines could prevent their retraction after use").

Moreover, because the filaments would be so flexible, they would be deployed in "unpredictable and potentially unrepeatable manners." *Id.* ¶ 219. In the neurotomy field, it is crucial to know what the contours of the ablation volume will

be in advance of ablation. *See id.* ¶ 222. If the tines are easily diverted in unpredictable manners by tissue and bone, the ablation volume will vary from one use to the next. *See id*. That is unacceptable to any RF neurotomy clinician. *See id.* ¶¶ 226-228.

In summary, a POSITA would not have had a reasonable expectation of success either to make Racz's modified device or, if made, to use Racz's modified device as an RF neurotomy needle.

E. Racz's Modified Device is Not Enabled.

The references used in an obviousness challenge must collectively teach a POSITA how to make the claimed invention. *See Beckman Instruments, Inc. v. LKB Produkter AB*, 892 F.2d 1547, 1551 (Fed. Cir. 1989); *Bristol-Myers Squibb v. Ben Venue Labs, Inc.*, 246 F.3d 1368, 1374 (Fed. Cir. 2001). An enabling disclosure requires that one skilled in the art can make and use the invention from the disclosure without undue experimentation. *In re Wands*, 858 F.2d 731, 737 (Fed. Cir. 1988).

That enablement requirement is not satisfied in this case. Racz, Fitz, and Lee do not, collectively, enable a POSITA to make Racz's modified device. To be clear, neither Dr. Tucker nor the petition provide any explanation whatsoever how to make Racz's modified device. As Peter Crosby explains in detail, it is not possible to construct Racz's modified device without undue experimentation, if at all. *See* Crosby Decl. ¶¶ 261-271.

As noted above, Mr. Crosby details all reasonably possible ways that a POSITA would consider how to make Racz's modified device, particularly the channels for the filaments in the sidewall, including drilling, casting, injection molding, extruding, 3D printing, etc. *See* § IV-D *supra*. He explains how each technique would not work to make such long narrow channels. Simply put, Racz's modified device is a paper design, not a practical one that can be fabricated. It is not enabled.

That conclusion on non-enablement is clear without analyzing the *Wands* factors in detail. Nonetheless, Peter Crosby analyzes those factors to support his opinion of non-enablement. *See id.* For example, he explains that nothing in this case provides any direction or guidance on how to make those channels, there are no working examples, and no amount of experimentation would yield those channels. *See id.* ¶¶ 262-263 (factor 1: quantity of experimentation required "would be overwhelming for a POSITA, who would likely give up in failure after a while"), ¶¶ 264-265 (factor 2: noting that Racz, Fitz, and Lee provide no guidance themselves to make Racz's modified device; not even the petition and Dr. Tucker provide guidance how to make the thing they call Racz's modified device), ¶ 266 (factor 3: there are no working examples of Racz's modified device), ¶ 267 (factor 4: "The nature of the invention is a needle for use in RF neurotomy" which must be "16-22 gauge," at which scale nothing like Racz's modified device is known or appears

feasible), ¶ 268 (factor 5: the state of the prior art includes nothing resembling Racz's modified device), ¶ 269 (factor 6: Racz's modified device is beyond the skill of those in the art), ¶ 270 (factor 7, predictability: "What Dr. Tucker proposes is so novel, unusual, and extreme, there is no predictable basis for his proposal"), ¶ 271 (factor 8: "that the breadth of the claims does not support the enablement of Racz's modified device").

F. Teaching Away From Racz's Modified Device

The references teach away from Racz's modified device in at least three ways.

1. Racz teaches away from the addition of filaments.

For Racz's modified device to be usable as a neurotomy needle, the filaments would need to be extraordinarily thin or narrow, as discussed above. Assuming they could even be constructed at all, such small filaments would be so flexible as to be bent by tissue in unpredictable manners as they exit the needle or possibly not even being able to pass through the tissue. *See* Crosby Decl. ¶ 282 ("As I explain above with calculations, which a POSITA would appreciate, Nitinol and other candidate metals for the filaments at the sizes contemplated in Racz's modified device, would pose an unacceptable risk of breakage or permanent deformation in the target use case."); Russo Decl. ¶¶ 217-228. Such flimsy filaments would risk being bent or broken by the tissues and/or bone that they encounter in neurotomy procedures.

Racz expressly teaches away from deploying a flexible electrode from a cannula in the context of neurotomy for these exact reasons. In discussing the limitations of prior art devices that include a cannula and an electrode that is advanced from a distal end of that cannula, Racz states:

> Stimulation and high frequency electrodes having expandable and flexible curved tips are known. Examples of such electrodes are the TEW Electrode Kit and the ZHK Electrode Kit, both manufactured by Radionics. Those **electrodes both have flexible, curved tips**, **which extend from the straight shaft** of an **enclosing cannula** to extend off-axis in an arc. This is useful in certain neural regions such as the trigeminal ganglion or the pituitary gland, or any area where the target region is very soft or fluid filled. *Such **flexible off-axis electrodes** have a limitation that there [sic] tips cannot penetrate tough tissue or encounter hard bone <u>without being damaged or diverted</u>.*

Racz 2:26-37 (emphases added). Thus, Racz teaches away from deploying overly flexible electrodes from a cannula in the bony regions encountered in neurotomy because such "flexible off-axis electrodes" would be "damaged or diverted."

Yet the filaments in Racz's modified device would be so thin that they would be exactly such "flexible off-axis electrodes," which Racz warns would be "damaged or diverted." *See* § IV-D *supra* (explaining how thin and flexible the filaments would be in Racz's modified device); *see also* Crosby Decl. ¶¶ 276-282; Russo Decl.

¶¶ 217-228 (same). Racz's modified device is virtually identical to what Racz teaches away from, as the following table makes clear:

Parts of System Criticized by Racz	Corresponding Feature of Racz's Modified Device
"**enclosing cannula**"	Racz's needle body
"**straight shaft**"	the proximal portion of Racz's needle body
"**flexible electrodes**" . . .	Lee's electrodes that extend through the sidewall of Racz's needle body
. . . **that "extend off-axis" "from the straight shaft of [the] enclosing cannula"**	Lee's electrodes extending out of the shaft, as depicted in the renditions, extend off axis relative to the Racz needle

Racz thus expressly teaches away from the very design proposed as Racz's modified device. *See Peterson*, 315 F.3d at 1331.

2. If Racz's modified device has a straight tip, Racz teaches away from the modified device.

As noted above, it is unclear whether Racz's modified device would retain the curve in Racz's tip or straighten it. While a straight tip would simplify the construction of the proposed device, *see* Crosby Decl. ¶ 247, Racz repeatedly and clearly says the tip 14 should be curved to go around anatomical obstacles, such as the structure 16 illustrated in Figure 1:

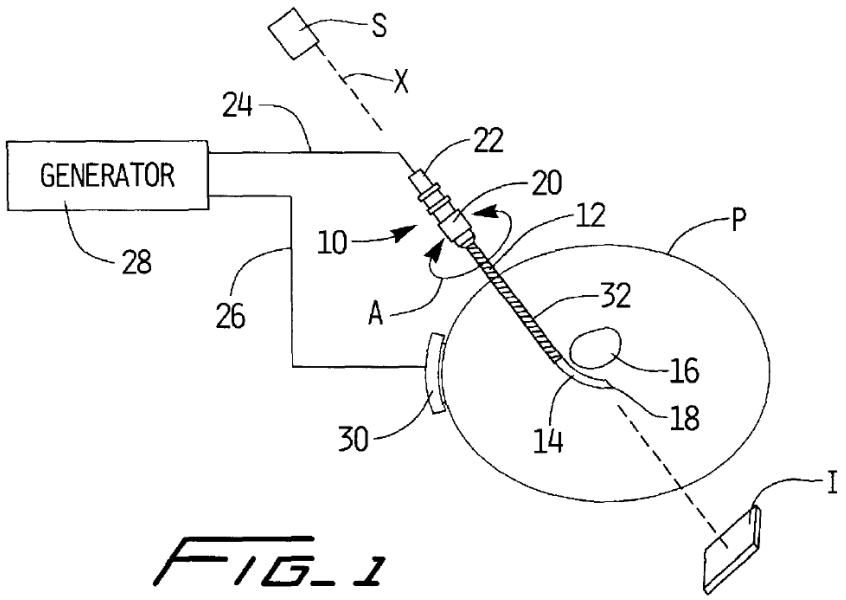

FIG. 1

Racz is emphatic in teaching a curved tip. Racz identifies straight needles as problematic, *see* Racz 1:63-2:15, 2:39-42; touts the advantages of a curved tip, *see id.* 2:57-3:17; refers to a "bent tip" in his title and abstract; illustrates (see Figure 1 above) and explains how "the curved tip 14 can be steered around the anatomical structure 16," *id.* 4:49-58; and recites a "rigidly bent portion" in every independent claim, *id.* 9:40, 10:31, 10:42.

"The bend at the tip is the *raison d'etre* of the invention." Crosby Decl. ¶ 98. Peter Crosby also explains that "A POSITA would interpret Racz as teaching that a curved or bent tip is an ***essential*** feature of Racz's probe . . ." *Id.* ¶ 203 (emphasis added). Dr. Russo adds, "[A] POSITA would understand that (a) Racz's devices, and any variations thereof, require a permanently bent tip and (b) this permanently

bent tip must have some degree of curvature—it cannot be . . . straight." Russo Decl. ¶ 151.

Dr. Tucker's position that Racz teaches that the degree of curvature of the tip could be varied so as to be zero, *see* Tucker Dep. Tr. 46:16-48:3, is contrary to Racz and demonstrates Dr. Tucker's lack of credibility. For support, Dr. Tucker relies on Racz 8:58-9:6. But that passage merely says that the needle may have "various configurations of . . . degree of curvature," not that the degree of curvature may be zero. *See id.* "Dr. Tucker's interpretation of this passage as contemplating zero curvature (i.e., a straight tip) is contrary to the words of this passage, contrary to the many other clear statements in Racz, and would nullify the advantages that Racz emphasizes as offered by a curved tip." Crosby Decl. ¶ 216. For example, the very next two paragraphs of Racz (9:7-23) reiterate that a "***bent*** tip structure [is] disclosed and claimed." *See id.* ¶ 217 (emphasis added). *See also* Russo Decl. ¶ 152 ("this [passage] means that variations of Racz's electrode geometries must have <u>*at least some*</u> curvature at the tip.").

Because Racz teaches that a curved tip is a necessity, Racz teaches away from the petition's proposal to the extent that Racz's modified device would have a straight tip. *See Peterson*, 315 F.3d at 1331. *See also* Russo Decl. ¶ 154 ("a POSITA would not see elimination of all curvature from Racz's tip as an option"). Moreover, straightening the tip "would render Racz's device unsuitable for its intended purpose

of being able to be steered around anatomical structures." Crosby Decl. ¶ 213; *see Gordon*, 733 F.2d at 902.

3. If Racz's modified device lacks anchors, Lee teaches away from the modified device.

As noted above, it is unclear whether Racz's modified device would have anchors as taught by Lee. According to Lee, such anchors are a necessity to prevent movement of the needle when Lee's stylets are deployed, unless the stylets are deployed "one at a time." Lee ¶ [0104]; *see also id.* ¶ [0089]. It is unclear how the filaments (Lee's stylets) are deployed in Racz's modified device, but neither the petition nor Dr. Tucker has indicated that they would be deployed one at a time. To the extent that the filaments in Racz's modified device are deployed all at once and Racz's modified device does not have anchors, Lee teaches against Racz's modified device. *See Peterson*, 315 F.3d at 1331. *See also* Crosby Decl. ¶ 289 ("Lee's anchors would be either impossible or undesirable in a neurotomy needle. . . . [C]onsideration of Lee's anchors would make a POSITA not pursue Racz's modified device").

Dr. Tucker misunderstands the necessity of Lee's anchors. During his deposition, he stated that Lee's anchors would be unnecessary if a rotary filament-deployment-retraction actuator were used because, according to him, only a longitudinally sliding actuator would cause movement of the needle that would

require anchors to resist. *See* Tucker Dep. Tr. 68:17-71:5. Dr. Tucker is wrong about that. "A POSITA would understand that the anchors resist the backward force on the device as the stylets are extended, *regardless* of the mechanism at the proximal end to extend the stylets." Crosby Decl. ¶ 290; *see also* Lee ¶¶ [0089], [0104]. "If longitudinally sliding movement of an actuator created the need for anchoring, that would be true even if such movement deployed the stylets one at a time." Crosby Decl. ¶ 292.

G. Inadequate Motivation to Combine Racz, Fitz, and Lee

As Peter Crosby explains, the art was generally characterized by two alternative approaches: (1) tine-less devices with removable RF probes for distal energization and (2) probe-less tined devices in which deployable tines or filaments are energized at the proximal end. *See* Crosby Decl. ¶¶ 161-167. Those were, before Stratus's invention, two distinct approaches that had never before been attempted together. *See id.* ¶ 165. In the RF neurotomy field specifically, the two approaches were considered mutually exclusive because of the very limited space available at the tip of a small RF neurotomy needle. *See id.* ¶ 164.

Because the petition incorrectly treats approaches (1) and (2) as complementary rather than alternatives, the petition's obviousness assertions are flawed. *See Ratti*, 270 F.2d at 813 (proposed modification is not obvious if it "would require a substantial reconstruction and redesign of the elements" in the primary

reference or "a change in the basic principles under which the [primary reference] was designed to operate").

H. The Teachings of Racz, Fitz, and Lee Would Not Have Led a POSITA to Racz's Modified Device.

Racz's modified device is far more complicated and problematic than necessary. Setting aside whether a POSITA would have had sufficient motivation to do so, the teachings of Racz and Fitz could be combined in a much simpler way to achieve the expanded-ablation-volume objective stated in the petition. *See* Crosby Decl. ¶¶ 168-175. To achieve this goal, using only the actual teachings of Racz and Fitz as they were intended, one could simply replace Racz's probe 52 with Fitz's electrodes. *Id.* Mr. Crosby provides an example of such a combination:

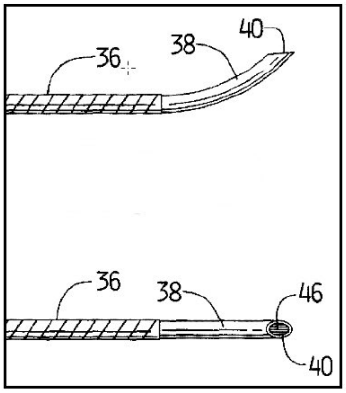

+

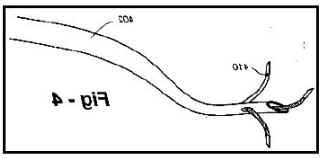

=

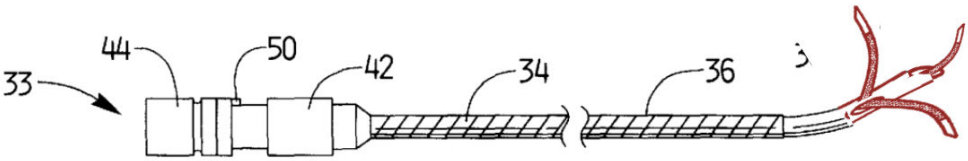

Crosby Decl. ¶ 173. At least some amount of development likely would be required to make such a device functional, if at all, in view of Fitz's limited disclosure. *See id.* ¶¶ 110-112, 173. Nevertheless, the relative simplicity of this "paper design" defeats the alleged obviousness of its paper design counterpart in Racz's modified device, which requires an unjustified leap from Racz and Fitz to yet a third, vastly more complicated reference from a nonanlogous field. *See TriVascular*, 812 F.3d at 1068-69 ("[W]hile a skilled artisan might have had a reasonable expectation of success in [making one modification], there was an insufficient motivation to [make the proposed modification].").

V. ALL CHALLENGES RELYING ON YOUNG '965 FAIL.

Various challenges (*i.e.*, B, D, F, and H) additionally rely on Young '965 with the base Racz-Fitz-Lee combination for Young '965's alleged teaching of an actuator that deploys and retracts tines and also accepts an RF probe. *See* Pet. at 65; Tucker Decl. ¶ 217. Young '965 does not cure the deficiencies in Racz's modified device and introduces further complications.

As Young '965 is generally directed to tumor ablation and not neurotomy, it lacks relevance to Racz and Fitz in many of the same ways as Lee. *See* Russo Decl. ¶¶ 182-184; Crosby Decl. ¶ 295.

Moreover, the petition's proposal to adapt Young '965's shaft 20 to deploy and retract Lee's filaments would require a substantial redesign of Racz's modified

device, yet the petition provides no details of how this redesign could be implemented. *See* Crosby Decl. ¶ 296. *See also Ratti*, 270 F.2d at 813. Young '965's shaft 20 could not possibly function in its original form within Racz's modified device because there is no clear way to attach the proximal ends of Lee's filaments to the distal end of the shaft (20). *See id.* ¶ 297.

Further, a POSITA would not have found it obvious to incorporate Racz's RF probe 52 into a hollowed-out shaft 20 because (1) the petitioner has identified no motivation to do so and (2) this would position the RF probe's temperature sensor away from the ablation zone, thus compromising its performance. *See* Russo Decl. ¶¶ 186-189. *See also Gordon*, 733 F.2d at 902.

VI. ALL CHALLENGES RELYING ON SCHEIBE FAIL.

Various challenges (*i.e.*, C, D, and G) additionally rely on Schiebe in addition to the base Racz-Fitz-Lee combination for Scheibe's alleged teaching of a rotational actuator. *See* Pet. at 68-71; Tucker Decl. ¶¶ 223-228. Scheibe does not cure the deficiencies in Racz's modified device and introduces further complications.

Scheibe is even less relevant to Racz and Fitz than are Lee and Young '965. *See* Russo Decl. ¶ 190; Crosby Decl. ¶ 298. A deflectable catheter assembly is not in the same field as RF neurotomy needles. *See* Russo Decl. ¶¶ 191-193. No amount of reliance by the petitioner and Dr. Tucker on a clearly erroneous statement in Scheibe that mischaracterizes "deflectable catheter assemblies" as implantable leads

for cardiac stimulation systems can render Scheibe analogous to RF neurotomy devices. *See id.*

Scheibe is indeed non-analogous because it additionally lacks reasonable pertinence to the petition's stated objectives. A POSITA would not

> find a rotational actuator mechanism that is intended to create tension on a "*pull*wire" that remains *fixed within* a distal end of a flexible catheter sheath to deflect the sheath, as taught by Scheibe, as being reasonably pertinent to the objective of *pushing* tines *out of* a distal end of a stiff cannula.

Id. ¶ 194.

VII. OBJECTIVE INDICIA OF NONOBVIOUSNESS

Objective indicia "can be ***the most probative*** evidence of non-obviousness" and "avert the trap of hindsight." *Crocs, Inc. v. Int'l Trade Comm'n*, 598 F.3d 1294, 1310 (Fed. Cir. 2010) (emphasis added) (citation omitted).

Here, the following objective indicia show nonobviousness: (1) long-felt-but-unmet need; (2) copying by others; (3) industry praise; and (4) commercial success.

A. Long-Felt-But-Unmet Need

Evidence that an invention satisfied a long-felt, but unsolved, need in a field supports a finding that the invention would not have been obvious at the time the

invention was made. *Tec Air, Inc. v. Denso Mfg. Mich. Inc.*, 192 F.3d 1353, 1361 (Fed. Cir. 1999).

Stratus's invention satisfies a long-felt need that interventional pain-specialist physicians experienced when performing RF neurotomy. Those physicians needed a simpler, safer, and more reliable way to approach and ablate a target nerve.

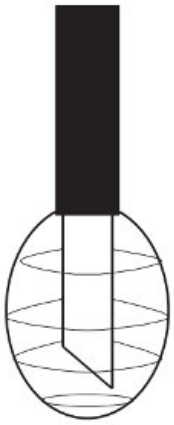

As explained by Dr. Russo, RF neurotomy procedures used in 2009, before the relevant priority dates, used a needle having an uninsulated tip as a single electrode. Russo Decl. ¶ 108. The total volume of the ablated area was approximately 0.5 cm^3 and the "geometry of each lesion was a prolate spheroid or egg shape," as shown on the right. *Id.* ¶ 112. "The procedure could fail" due to incorrect electrode placement or failure to adjust to "anatomic variations." *Id.* ¶ 114. The risk of incorrect positioning would also tend to cause the procedure to take more time (and thus be more costly and risky to the patient) and also cause more ablation energizations to be performed than desirable. *See id.* ¶¶ 117, 123-125. As a result, few interventional pain-medicine specialists were willing to adopt the procedure as part of their suite of treatments. *See id.* ¶¶ 126-127.

Dr. Russo provides a history of RF neurotomy, *see id.* ¶¶ 89-107, and concludes "the RF neurotomy field experienced somewhat of an '***ice age***' in terms of product development throughout the 1990s and 2000s." *Id.* ¶ 115 (emphasis

added). He describes introduction of the Nimbus device as "a '***game changer***' in the RF neurotomy field" because of the deployable/retractable tines that yield a lesion with a unique shape (illustrated below alongside a traditional needle lesion shape). *Id*. ¶ 117 (emphasis added).

Id. ¶ 121. The lesion of the Nimbus device is shaped somewhat like a teardrop with an expanded distal base that is much wider than the elongated, egg-shaped (prolate spheroid) lesion formed from a traditional neurotomy needle. Also, the Nimbus lesion has a distal projection that extends in a predictable manner beyond a distal end of the needle tip so that the nerve may be easily targeted without undesirably damaging tissue below the nerve, as shown. *See id.* ¶¶ 119, 121.

The Nimbus's lesion shape enables perpendicular placement with its attendant advantages. *See id*. ¶ 122. Traditional neurotomy needles require parallel placement to effectively or reliably ablate nerves because perpendicular placement would

require pinpoint accuracy that is not possible with the small ablation region at the distal tip of a traditional neurotomy needle. *See id*. ¶¶ 108-118.

The perpendicular placement is further advantageous because it is anatomically easier for practitioners. *See id*. ¶ 126. For example, the practitioner can advance the needle perpendicularly toward a prominent bone feature until hitting bone, which acts as a backstop; after hitting the bone, the practitioner can then slightly retract the tip and deploy the tines. *See id*. ¶ 124. This is much safer than the parallel placement, which may result in inadvertently advancing the tip too far and ablating a larger nerve. *See id*. Thus, less skill is required, enabling more practitioners to perform RF neurotomy procedures. *See id*. ¶ 127. With perpendicular placement for spinal medial branch neurotomy, the bone target may be a well-defined radiographic feature known as the "eye of the Scotty dog," that can readily be identified to verify placement via X-ray. *See id.* ¶ 126. Alternatively, Dr. Russo has developed a "multifidus-sparing" RF neurotomy technique that does not damage the multifidus muscle during the ablation procedure, and the Nimbus devices is especially well-suited for that technique. *See* Russo Decl. ¶¶ 128-136; Ex. 2005.

Additional advantages result from the expanded volume, relative to a traditional neurotomy needle. *See id*. ¶ 121. This enables the procedure to be completed more rapidly, while minimizing damage to surrounding tissue. *See id*.

¶ 125. Because perpendicular placement enables a procedure to be completed with fewer passes (insertions of the needle), fewer heat cycles are required and cause less damage to surrounding tissue. *See id*. In summary, the ablation region is predictably shaped, readily envisioned by a practitioner from fluoroscopic images, and extends only a small distance beyond distal ends of the tines, such that a nerve can be better targeted with minimal overextension of the ablation volume that could otherwise damage nearby nerves.

As a result of the improvements in RF neurotomy made possible by the invention, RF neurotomy is now more accessible to more practitioners because it is safer and easier to use, with resultant benefits to many who suffer with back pain. *See id*. ¶ 127.

In conclusion, the invention has solved long-felt-but-unmet needs in RF neurotomy—it is a "***game changer***" bringing the field out of the "***ice age***." *See id*. ¶¶ 115, 117 (emphases added). If Racz's modified device were truly an obvious combination of the teachings of Racz, Fitz, and Lee, achievable with only "routine engineering," as Dr. Tucker claims, then surely someone would have made that combination long ago to break the ice age. The fact that that never happened before the Stratus invention is powerful evidence of the non-obviousness of the invention.

B. Copying

"[C]opying the claimed invention . . . is indicative of nonobviousness." *Windsurfing Int'l, Inc. v. AMF Inc.*, 782 F.2d 995, 1000 (Fed. Cir. 1986).

The petitioner's admissions to the FDA of the equivalence of its Trident devices to the Nimbus device prove copying. The petitioner obtained FDA approval of the Trident devices after convincing the FDA that the Trident devices are "substantially equivalent" to the Nimbus devices. Jorgensen Decl. ¶¶ 38-39, 42 (citing Ex. 2019 at 1, 8). In fact, the petitioner went even further than necessary before the FDA, stating that the Trident tines are "equivalent" (rather than merely "substantially equivalent") to the Nimbus tines. *See id.* ¶ 40 (citing Ex. 2019 at 8).

Moreover, the Nimbus device is covered by the claims of the '688 Patent. *See* Ex. 2008 (claim charts for Nimbus); Crosby Decl. ¶ 21 (referencing claim charts and testifying as to coverage). Because the petitioner has copied the Nimbus device, which is covered by the '728 Patent claims, the petitioner has copied the claimed invention. *See also* Ex. 2011 (complaint showing infringement by Trident).

Indeed, the Nimbus and Trident devices look highly similar (see below), have the same basic components, operate very similarly, and are intended for the same use by the same interventional pain-medicine specialist physicians. *See* Jorgensen Decl. ¶¶ 32-37.

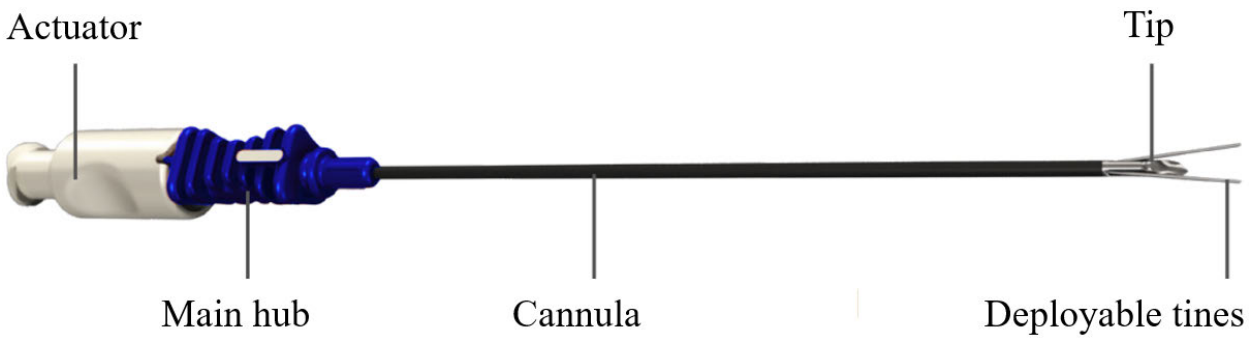

Stratus's Nimbus RF Neurotomy Needle

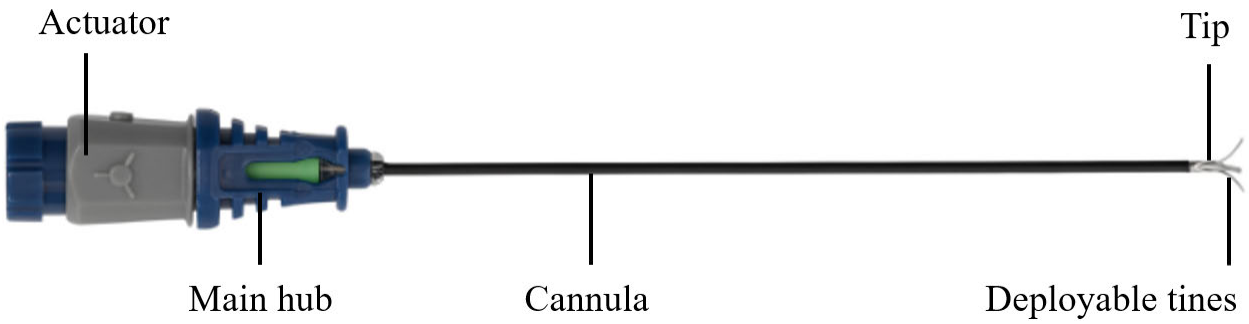

Diros's "Trident DTR" RF Neurotomy Needle

The fact that the invention has been copied is additional evidence of its non-obviousness. If the invention were truly obvious from Racz, Fitz, and Lee with just routine engineering, copying would have been unnecessary.

C. Praise

"Evidence that the industry praised a claimed invention or a product that embodies the patent claims weighs against an assertion that the same claimed invention would have been obvious." *Apple Inc. v. Samsung Elecs. Co.*, 839 F.3d 1034, 1053 (Fed. Cir. 2016).

The industry has praised the Nimbus devices by awards recognizing the amazing success Stratus has enjoyed based on physician acceptance of the Nimbus devices due to its ease of use, improved safety, predictable and durable pain relief, faster procedure times, and lower cost. Stratus was one of 18 companies recognized in the list of 2024 Pepperdine Graziadio Most Fundable Companies, from a candidate pool of 2,000 early-stage U.S. startups that were considered. *See* Ex. 2026; Jorgensen Decl. ¶ 55. Stratus was also recognized as one of the fastest-growing companies in North America on the Deloitte Technology Fast 500™. Stratus's ranking was based on its 212% growth during the three-year period evaluated. *See* Ex. 2025; Jorgensen Decl. ¶ 54. All of this praise directed to Stratus is attributable to the Nimbus device, [redacted]. *See* Jorgensen Decl. ¶ 14.

D. Commercial Success

Commercial success in the relevant marketplace has been repeatedly recognized as highly relevant, objective evidence of nonobviousness. *See Leo Pharm. Prods., Ltd. v. Rea*, 726 F.3d 1346, 1358 (Fed. Cir. 2013).

1. Commercial embodiments of invention

Stratus's Nimbus devices are commercial embodiments of the invention claimed in the '688 Patent. *See* § II-E *supra*; *see also* Ex. 2008 (claim charts for Nimbus); Crosby Decl. ¶ 11 (referencing claim charts and testifying as to coverage).

Stratus marks the Nimbus devices with the '688 Patent number. *See* Jorgensen Decl. ¶ 11.

2. Commercial success *per se*

"[S]ales figures alone" can be "evidence of commercial success." *Tec Air*, 192 F.3d at 1360–1361. In this case, Stratus's sales figures provide compelling evidence of commercial success.

[redacted] of Stratus's revenue is from sales of its Nimbus devices and the RF probes used to energize them, so the successes of Stratus and its Nimbus device [redacted]. *See* Jorgensen Decl. ¶ 14. Over the last five years, Stratus has consistently achieved major year-over-year growth, as shown below, which indicates phenomenal commercial success of the Nimbus device.

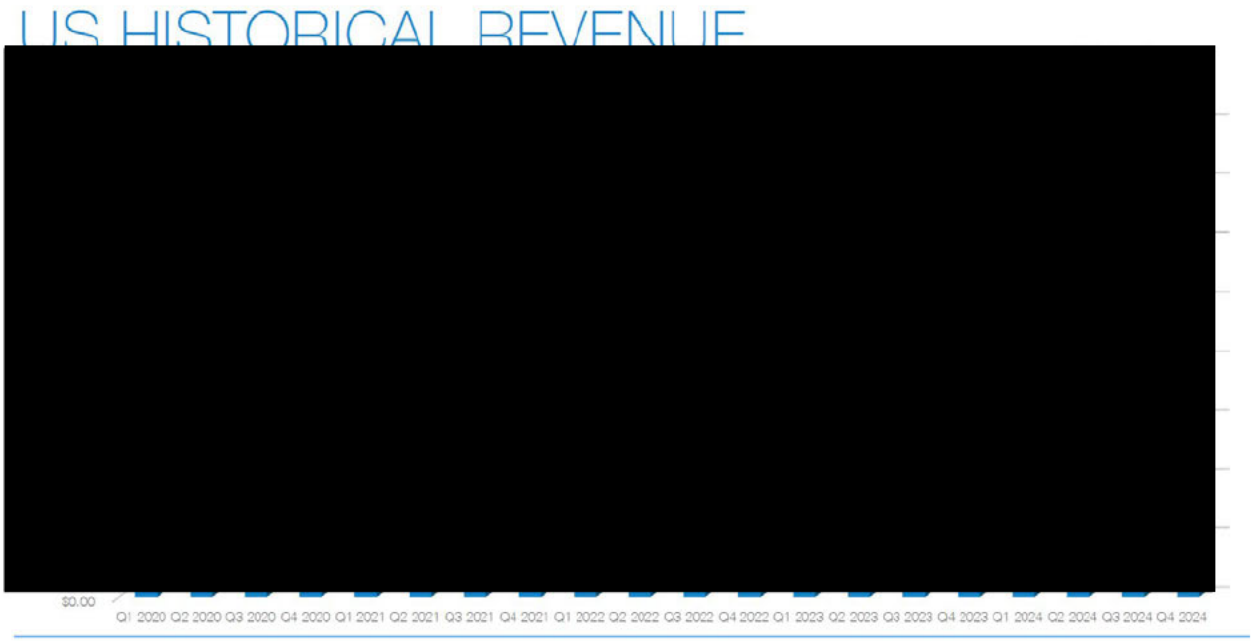

Id. ¶ 15.

"[S]ales figures coupled with market data provide stronger evidence of commercial success." *Tec Air*, 192 F.3d at 1360-1361. Stratus's market data is at least as compelling as its sales figures.

The past ten years of the relevant U.S. market, as divided among market participants, are provided in the following chart. Jorgensen Decl. ¶ 24. Stratus (depicted in light blue) entered this market in 2020.

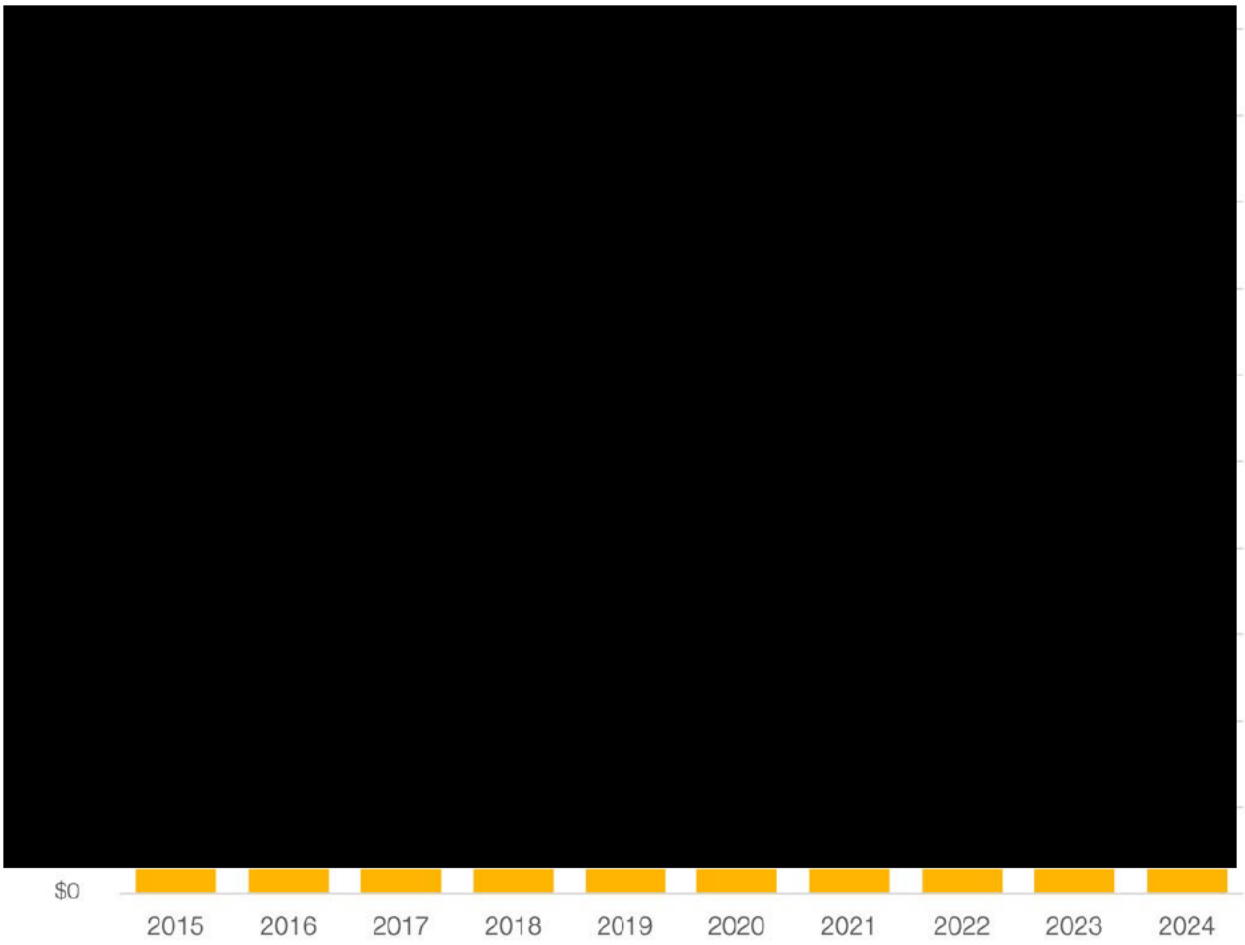

Id. The foregoing chart shows that two of the largest medical device companies in the world, [redacted] for at least a decade. *See id.* ¶ 17. Stratus has nevertheless [redacted] in just five years, despite competing as "a startup minnow among legacy whales." *See id.* With a sales force sized at [redacted], Stratus has nevertheless [redacted], as shown in the following chart (in which Stryker and Abbott are omitted). *See id.* ¶¶ 17, 20.

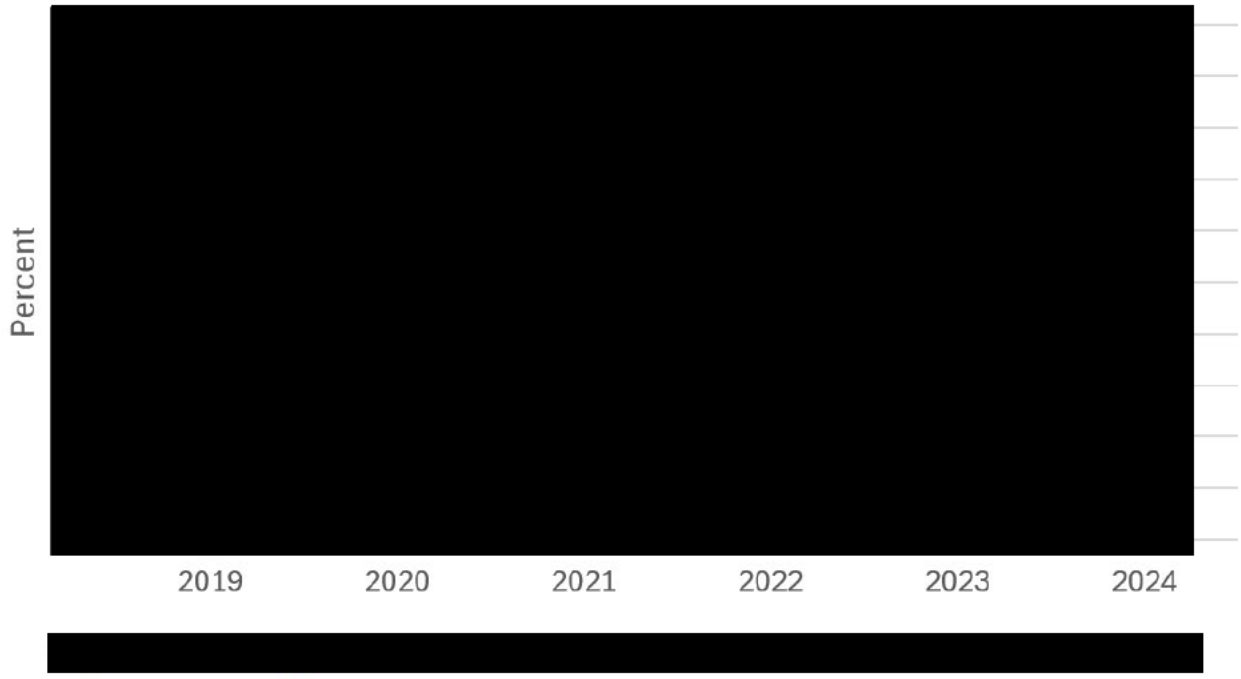

Id. ¶ 17. Stratus has [redacted] its share of the RF neurotomy market to [redacted]. *See id.*

The chart below shows side-by-side snapshots of market shares in 2020 and 2024.

Id. ¶ 19. Although Stratus has not yet [redacted], that is not a fair comparison, as those [redacted] have tremendous advantages in terms of market incumbency, brand name, economies of scale, [redacted]. *See id.* ¶¶ 20, 27. [redacted], it is believed that Stratus [redacted]. *See id.* ¶ 20.

Additionally, based on a comparison of compound annual growth rates since 2020 (see below), Stratus is [redacted]. *See id.* ¶ 22.

[redacted]

3. Nexus

There is a presumption of nexus when a "product embodies the invention and is coextensive with it." *Volvo Penta of Ams., LLC v. Brunswick Corp.*, 81 F.4th 1202, 1211 (Fed. Cir. 2023).

In this case, the Nimbus devices embody at least challenged claim 1 and are coextensive with claim 1. *See* Crosby Decl. ¶ 21; Ex. 2008 (claim chart). The

claimed invention is not just a small part of the Nimbus device. The Nimbus device includes all components recited in the claims and little else. Indeed, a Nimbus device is (quoting parts of claim 1) a "neurotomy needle" together with a removeable "radiofrequency probe." The needle has a distal "conductive portion," a "tip," and an "elongate member comprising a lumen." Two tines (filaments) are moveable between a retracted position and a deployed position and are electrically connected to the tip to operate as a single monopolar electrode.

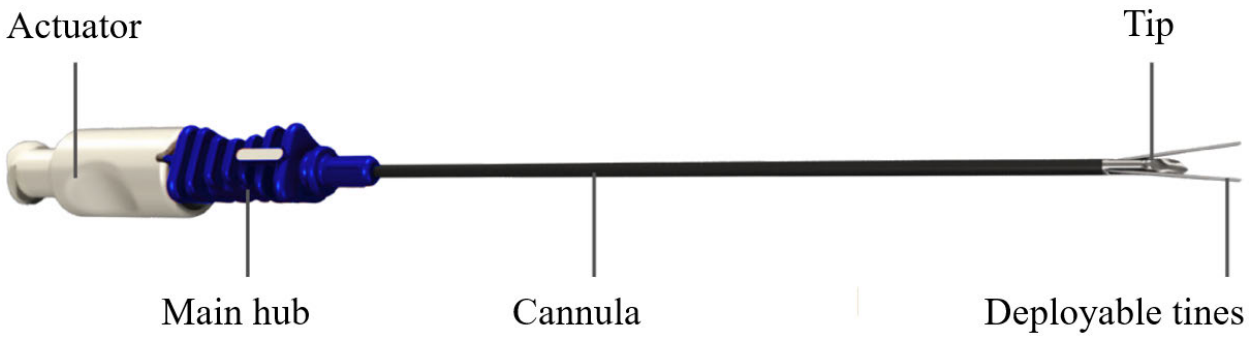

Stratus's Nimbus RF Neurotomy Needle

This is a case in which a nexus should be presumed. The commercial success of the Nimbus device is commercial success of the invention.

Moreover, the commercial success is attributable to the advantages that follow from the claimed invention. *See* Russo Decl. ¶ 120-121. The improved size and shape of the ablation volume of the Nimbus device is a result of the claimed tip and deployable filaments. *See id*. That is what has enabled the advantageous "perpendicular approach" and multifidus-sparing RF neurotomy technique, and

otherwise satisfied the long-felt-but-unsolved needs, bringing RF neurotomy out of its "ice age." *Id.* ¶ 115, 122, 128, 129, 134.

VIII. CONCLUSION

For at least the foregoing reasons, Stratus respectfully requests that the Board enter a final written decision in Stratus's favor, holding that the petitioner has failed to prove any claims of the '688 Patent unpatentable.

Respectfully submitted,

Date: 2025 May 23

By: / M.C. Phillips /
Matthew C. Phillips
Registration No. 43,403
Lead Counsel for Stratus

WORD-COUNT CERTIFICATE

I certify that the foregoing document complies with the type-volume limitation of 37 C.F.R. § 42.24(a) and (b) and contains 13,980 words based on the word count indicated by Microsoft Word for Office 365 MSO®, excluding those portions exempted by the rule, including 280 words in graphics created by the Patent Owner or as annotations added by the Patent Owner to images reproduced in this document.

/ M.C. Phillips /
Matthew C. Phillips
Registration No. 43,403

CERTIFICATE OF SERVICE

I hereby certify that on May 23, 2025, copies of the foregoing PATENT OWNER'S RESPONSE TO PETITION FOR *INTER PARTES* REVIEW and all documents filed with it were served via electronic mail, as agreed to by counsel, upon the following counsel for the Petitioner:

Christopher Kelly	ckelly@mcciplaw.com
Gregory Carlin	gcarlin@mcciplaw.com
Warren Thomas	wthomas@mcciplaw.com
Lee Hamilton	lhamilton@mcciplaw.com

/ M.C. Phillips /
Matthew C. Phillips
Registration No. 43,403