US009078678B2

(12) **United States Patent**
**Zerfas et al.**

(10) **Patent No.: US 9,078,678 B2**
(45) **Date of Patent: Jul. 14, 2015**

(54) **METHOD OF MANUFACTURING RF ABLATION PROBE WITH UNIBODY ELECTRODE ELEMENT**

(71) Applicant: **Boston Scientific Scimed Inc.**, Maple Grove, MN (US)

(72) Inventors: **Jeffrey W. Zerfas**, Bloomington, IN (US); **Steve Pickett**, Spencer, IN (US); **James A. Teague**, Spencer, IN (US); **Martin G. Donofrio**, Gosport, IN (US)

(73) Assignee: **Boston Scientific Scimed, Inc.**, Maple Grove, MN (US)

( * ) Notice: Subject to any disclaimer, the term of this patent is extended or adjusted under 35 U.S.C. 154(b) by 86 days.

(21) Appl. No.: **13/848,329**

(22) Filed: **Mar. 21, 2013**

(65) **Prior Publication Data**

US 2013/0283607 A1 Oct. 31, 2013

**Related U.S. Application Data**

(60) Continuation of application No. 12/838,734, filed on Jul. 19, 2010, now Pat. No. 8,418,362, which is a division of application No. 12/271,750, filed on Nov. 14, 2008, now Pat. No. 7,779,537, which is a division of application No. 10/949,081, filed on Sep. 24, 2004, now Pat. No. 7,458,971.

(51) **Int. Cl.**
***H01S 4/00*** (2006.01)
***A61B 18/18*** (2006.01)

(Continued)

(52) **U.S. Cl.**
CPC ..... ***A61B 18/18*** (2013.01); ***A61B 18/1477*** (2013.01); *A61B 2018/00053* (2013.01); *A61B 2018/00214* (2013.01); *A61B 2018/143* (2013.01); *A61B 2018/1432* (2013.01); *Y10T 29/49117* (2015.01); *Y10T 29/49121* (2015.01); *Y10T 29/49131* (2015.01); *Y10T 29/49147* (2015.10); *Y10T 29/49204* (2015.01); *Y10T 29/49222* (2015.01)

(58) **Field of Classification Search**
CPC ..... A61B 18/18; A61B 18/1477; A61B 2018/00053; A61B 2018/00214; A61B 2018/143; A61B 2018/1432
USPC ..... 29/874, 884, 592.1; 600/372, 373; 606/40, 41; 607/99, 101
See application file for complete search history.

(56) **References Cited**

U.S. PATENT DOCUMENTS

4,923,226 A * 5/1990 Bartholomew ..... 285/242

(Continued)

*Primary Examiner* — Carl Arbes
(74) *Attorney, Agent, or Firm* — Kacvinsky Daisak Bluni PLLC

(57) **ABSTRACT**

An ablation probe and method of manufacturing the ablation probe are provided. The probe comprises a probe shaft and a unibody electrode element. The unibody electrode element comprises a common electrode base located at the distal end of the shaft, and a plurality of electrode tines distally extending from the electrode base. The electrode element may be created by forming divisions (such as slits or slots) from a first end of an electrically conductive elongate member towards an opposing second end of the elongate member. Alternatively, the divisions can be formed from a first end of an electrically conductive sheet towards an opposing second end of the sheet, and then bent or rolled to form the elongate member. In either case, the common electrode base can either be separately mounted to a probe shaft, or the probe shaft can be formed from the elongate member, in which case, the electrode base will be integrated with the probe shaft as a unibody structure. The electrode tines can be optionally shaped, e.g., to proximally evert.

**13 Claims, 6 Drawing Sheets**

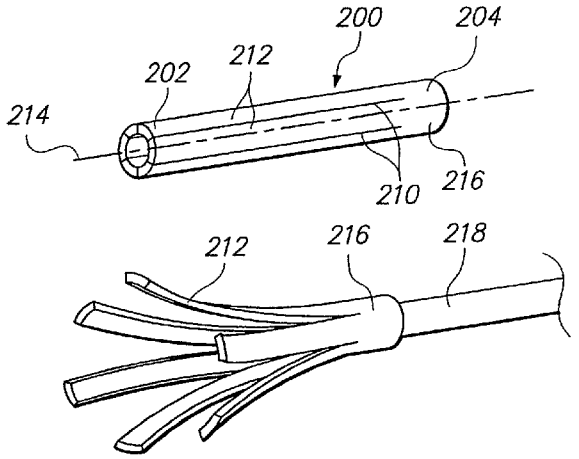


Petitioner's Exhibit 1027
Avanos v. Stratus

(51) **Int. Cl.**
***A61B 18/14*** (2006.01)
*A61B 18/00* (2006.01)

(56) **References Cited**

U.S. PATENT DOCUMENTS

5,261,706 A * 11/1993 Bartholomew ..... 285/242
5,388,870 A * 2/1995 Bartholomew ..... 285/242
7,195,629 B2 * 3/2007 Behl et al. ..... 606/41
7,857,811 B2 * 12/2010 Vaska et al. ..... 606/41
8,418,362 B2 * 4/2013 Zerfas et al. ..... 29/874
2002/0082595 A1 * 6/2002 Langberg et al. ..... 606/41
2003/0135207 A1 * 7/2003 Langberg et al. ..... 606/41
2004/0003498 A1 * 1/2004 Swearingen et al. ..... 29/862
2005/0065509 A1 * 3/2005 Coldwell et al. ..... 606/41

* cited by examiner

FIG. 1

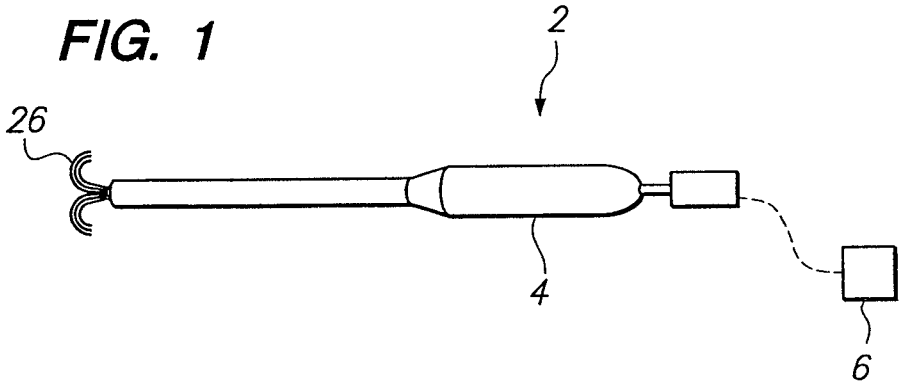


FIG. 2

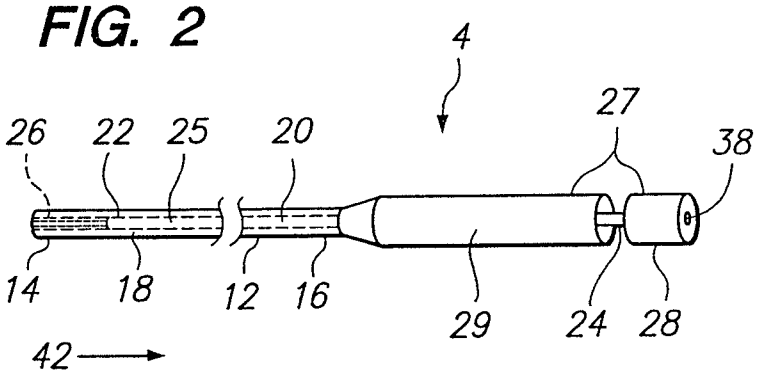


FIG. 3

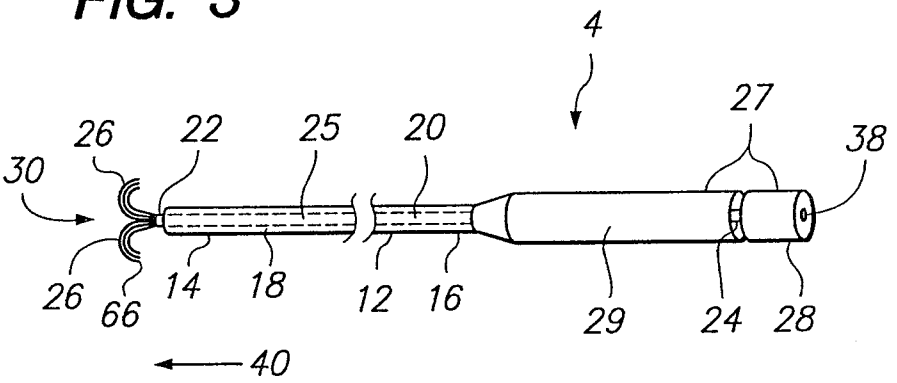


Petitioner's Exhibit 1027
Avanos v. Stratus

FIG. 4A

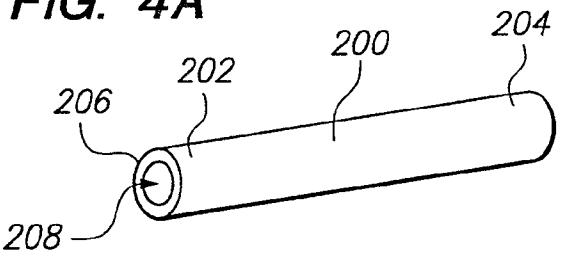


FIG. 4B

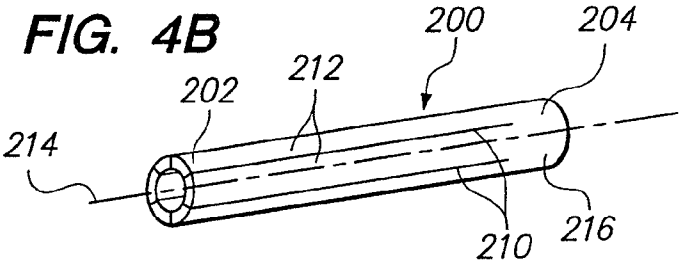


FIG. 4C

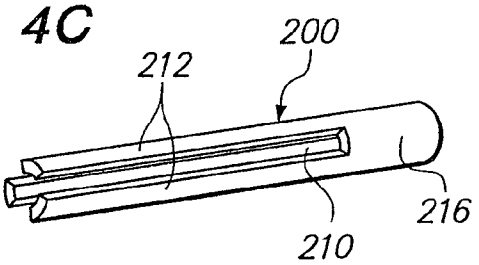


FIG. 4D

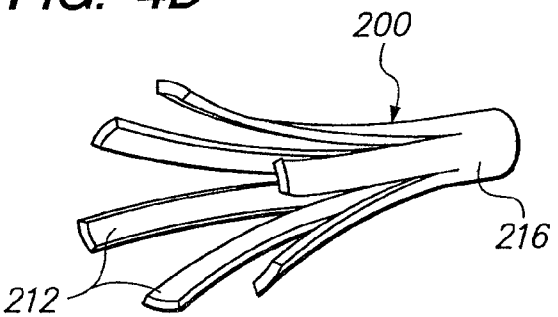

FIG. 4E

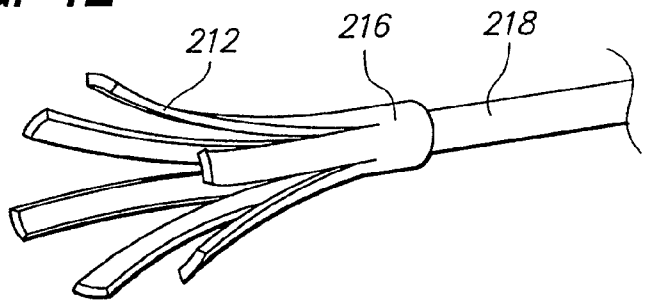


FIG. 5A

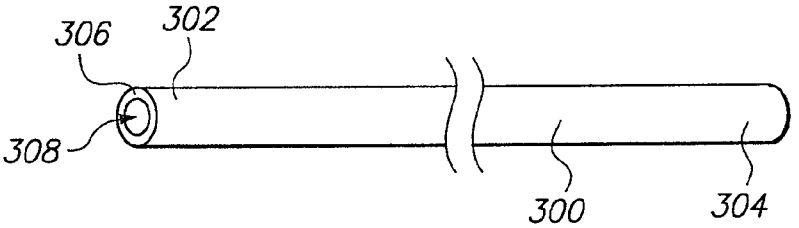


FIG. 5B

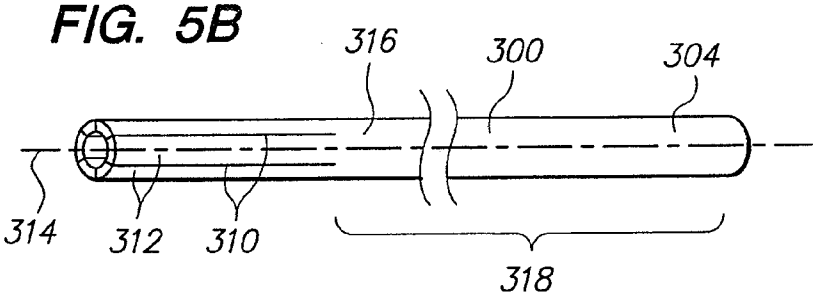


FIG. 5C

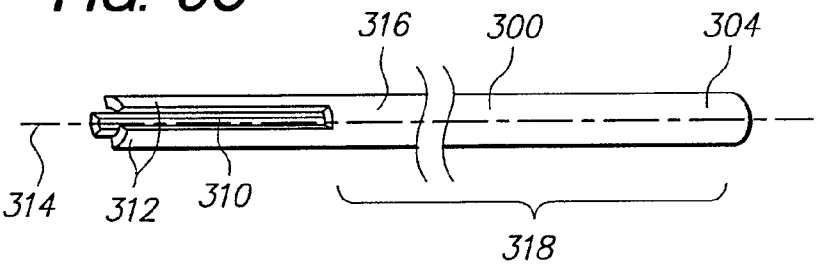


Petitioner's Exhibit 1027
Avanos v. Stratus

FIG. 5D

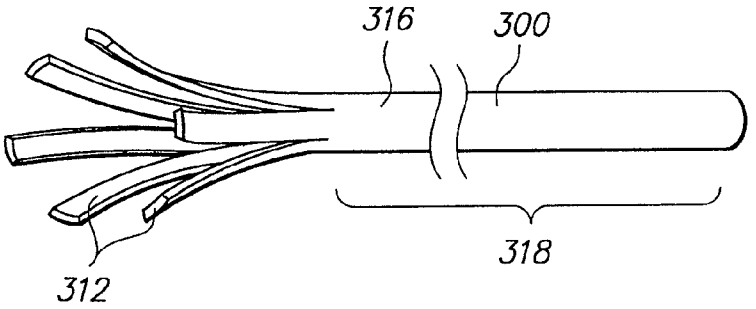


FIG. 6A

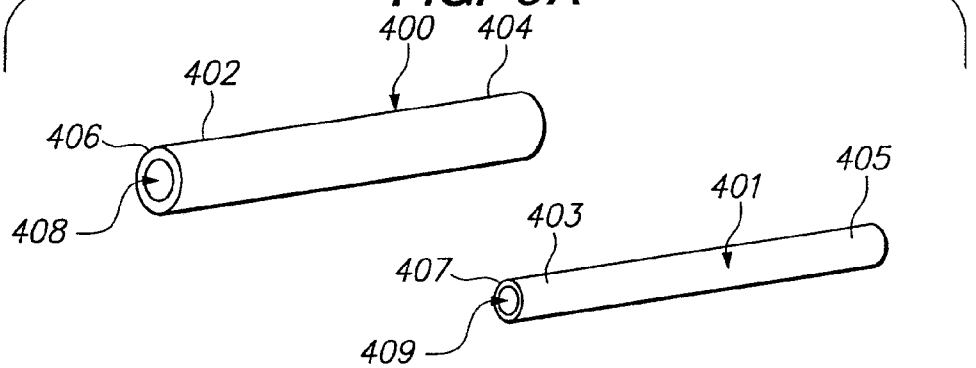


FIG. 6B

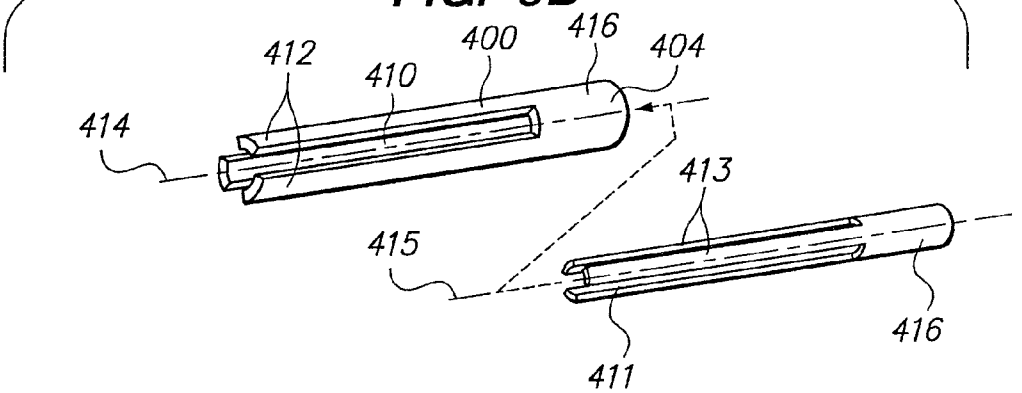


FIG. 6C

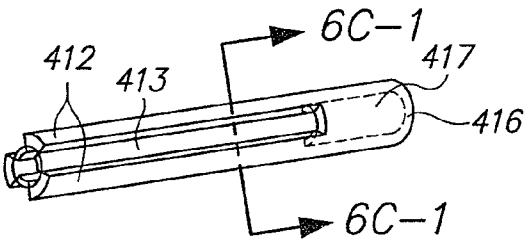


FIG. 6C-1

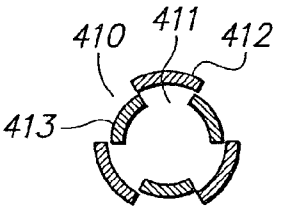

FIG. 6D

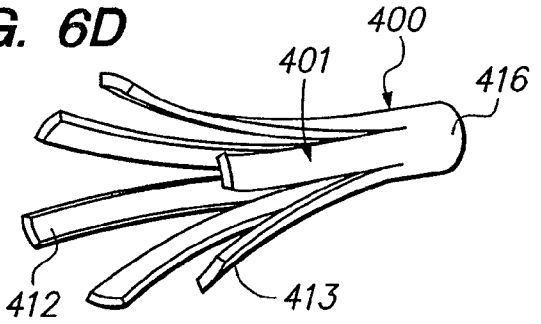


FIG. 6E

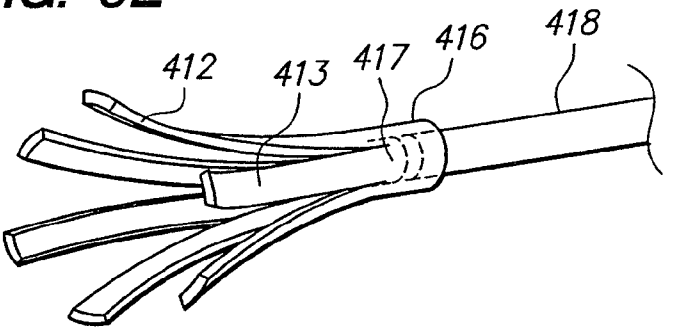


FIG. 7

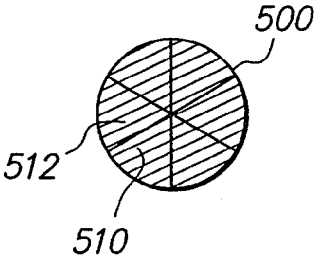


FIG. 8

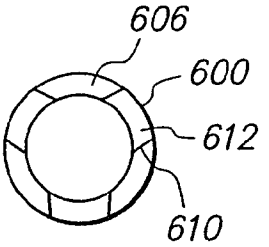


FIG. 9

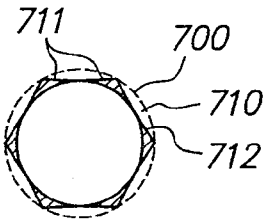


FIG. 10

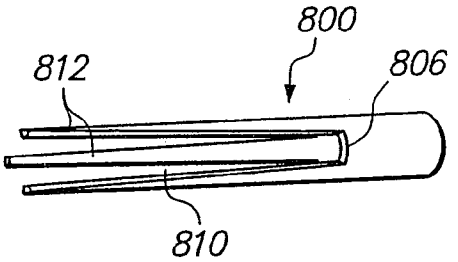

FIG. 11A

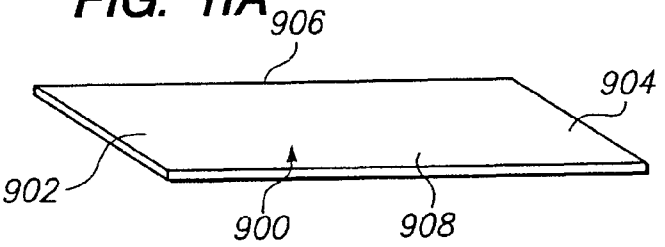


FIG. 11B

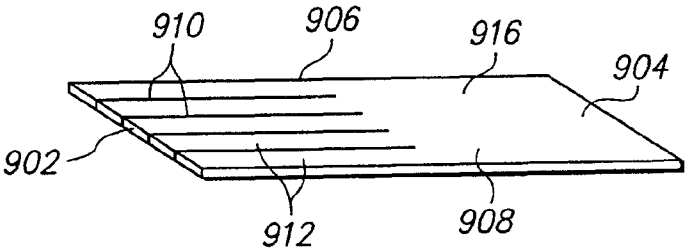


FIG. 11C

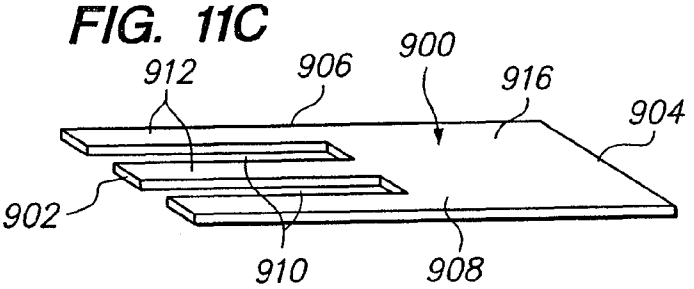


FIG. 11D

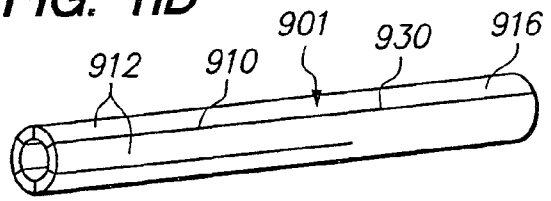


FIG. 11E

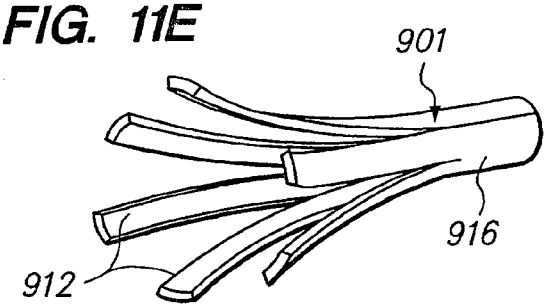

# METHOD OF MANUFACTURING RF ABLATION PROBE WITH UNIBODY ELECTRODE ELEMENT

## RELATED APPLICATION

This application is a continuation of pending U.S. patent application Ser. No. 12/838,734, filed Jul. 19, 2010, which is a divisional of and claims priority to U.S. application No. 12/271,750 filed on Nov. 14, 2008, now issued U.S. Pat. No. 7,779,537, which itself is a divisional of and claims priority to U.S. application No. 10/949,081 filed on Sep. 24, 2004, now issued as U.S. Pat. No. 7,458,971, which are incorporated by reference as if set forth in full.

## FIELD OF THE INVENTION

The field of the invention relates generally to the structure and use of radio frequency (RF) electrosurgical probes for the treatment of tissue, and more particularly, to electrosurgical probes having multiple tissue-penetrating electrodes that are deployed in an array to treat large volumes of tissue.

## BACKGROUND OF THE INVENTION

Tissue may be destroyed, ablated, or otherwise treated using thermal energy during various therapeutic procedures. Many forms of thermal energy may be imparted to tissue, such as radio frequency electrical energy, microwave electromagnetic energy, laser energy, acoustic energy, or thermal conduction. In particular, radio frequency ablation (RFA) may be used to treat patients with tissue anomalies, such as liver anomalies and many primary cancers, such as cancers of the stomach, bowel, pancreas, kidney and lung. RFA treatment involves destroying undesirable cells by generating heat through agitation caused by the application of alternating electrical current (radio frequency energy) through the tissue.

Various RF ablation devices have been suggested for this purpose. For example, U.S. Pat. No. 5,855,576 describes an ablation apparatus that includes a plurality of electrode tines deployable from a cannula. Each of the tines includes a proximal end that is coupled to a generator, and a distal end that may project from a distal end of the cannula. The tines are arranged in an array with the distal ends located generally radially and uniformly spaced apart from the distal end of the cannula. The tines may be energized in a bipolar mode (i.e., current flows between closely spaced electrode tines) or a monopolar mode (i.e., current flows between one or more electrode tines and a larger, remotely located common electrode) to heat and necrose tissue within a precisely defined volumetric region of target tissue. To assure that the target tissue is adequately treated and/or to limit damaging adjacent healthy tissues, the array of tines may be arranged uniformly, e.g., substantially evenly and symmetrically spaced-apart so that heat is generated uniformly within the desired target tissue volume.

When using the above described devices in percutaneous interventions, the cannula is generally inserted through a patient's skin, and the tines are deployed out of the distal end of the cannula to penetrate target tissue. The tines are then energized to ablate the target tissue. Such procedure results in surgical wounds that are much smaller in size than those associated with open surgical settings, and therefore, improves healing time for the patient. However, the size of a surgical wound is still affected by the overall cross sectional dimension of the ablation device—i.e., the larger the ablation device used, the larger the wound size.



The above described devices are generally constructed by manufacturing the tines in individual pieces, and welding or soldering the tines onto a shaft. Such manufacturing technique is time consuming, and increases the risk of manufacturing error. Also, the connection adhering the individual tines to the shaft increases the overall cross sectional dimension of the ablation device, which in turn, increases the size of surgical wounds when the ablation device is used to treat patients.

Thus, there remains a need to provide for improved methods of manufacturing ablation devices.

## SUMMARY OF THE INVENTION

In accordance with a first aspect of the present inventions, a tissue ablation probe is provided. The probe comprises a probe shaft, which may be cylindrical, and a unibody electrode element. The unibody electrode element comprises a common electrode base located at the distal end of the shaft, and a plurality of electrode tines distally extending from the electrode base. The electrode tines may either be tightly spaced or loosely spaced at the electrode base, and may be pre-shaped, e.g., in a proximally everted shape. In one embodiment, the electrode element and shaft are formed as a unibody structure. In another embodiment, the electrode element and shaft are formed as discrete members that are subsequently secured to each other.

The electrode element may be electrically coupled to the probe shaft. In an optional embodiment, the probe comprises a radio frequency connector secured to the proximal end of the shaft end and electrically coupled to the electrode tines, either through the probe shaft or another means, such as RF wires. The probe may optionally comprise a cannula, in which case, the probe shaft is slidably disposed therein, so that the electrode element can be alternately placed in a deployed configuration and a retracted configuration. The probe may optionally comprise another unibody electrode element comprising another common electrode base coaxially secured to the electrode base and another plurality of electrode tines distally extending from the other electrode base.

In accordance with a second aspect of the present inventions, another tissue ablation probe is provided. The probe comprises a probe shaft, which may be cylindrical, a common electrode base located at the distal end of the probe shaft, and an array of electrode tines distally extending from the electrode base. The electrode array has a cross-sectional profile at the electrode base that is equal to or less than the cross-sectional profile of the electrode base, itself. The detailed features of the probe shaft, electrode base, and electrode tines can be the same as those previously described above.

In accordance with a third aspect of the present inventions, a method of manufacturing an ablation probe is provided. The method comprises forming divisions from a first end of an electrically conductive elongate member towards an opposing second end of the elongate member to create a plurality of electrode tines and a common electrode base from the elongate member. Alternatively, the divisions can be formed from a first end of an electrically conductive sheet towards an opposing second end of the sheet, and then bent or rolled to form the elongate member. In either case, the common electrode base can either be separately mounted to a probe shaft, or the probe shaft can be formed from the elongate member, in which case, the electrode base will be integrated with the probe shaft as a unibody structure. In one embodiment, the elongate member is a hollow cylinder, although other shapes can be used. The divisions can be variously formed in the

Petitioner's Exhibit 1027
Avanos v. Stratus

elongate member to create the electrode tines. For example, the divisions can take the form of slits, such that the electrode tines are tightly spaced at the electrode base. Or the divisions can be slots, such that the electrode tines are loosely spaced at the electrode base. The electrode tines can be optionally shaped, e.g., to proximally evert.

The method may optionally comprise electrically coupling the electrode tines to the probe shaft. A radio frequency connector can also be mounted to the probe shaft and electrically coupled to the electrode tines via the probe shaft or another means, such as RF wires. The method may also comprise mounting the probe shaft within a cannula, so that the electrode tines can be alternately placed in a deployed configuration and a retracted configuration. In one method, divisions are formed from a first end of another electrically conductive elongate member towards an opposing second end of the other elongate member to create another plurality of electrode tines and another common electrode base from the other elongate member. In this case, the other electrode base can be coaxially secured within the first electrode base in order to integrate the assembly.

Other and further aspects and features of the invention will be evident from reading the following detailed description of the preferred embodiments, which are intended to illustrate, not limit, the invention.

## BRIEF DESCRIPTION OF THE DRAWINGS

The drawings illustrate the design and utility of preferred embodiments of the present invention. It should be noted that the figures are not drawn to scale and that elements of similar structures or functions are represented by like reference numerals throughout the figures. In order to better appreciate how the above-recited and other advantages and objects of the present inventions are obtained, a more particular description of the present inventions briefly described above will be rendered by reference to specific embodiments thereof, which are illustrated in the accompanying drawings. Understanding that these drawings depict only typical embodiments of the invention and are not therefore to be considered limiting of its scope, the invention will be described and explained with additional specificity and detail through the use of the accompanying drawings in which:

FIG. **1** is a schematic diagram of a tissue ablation system constructed in accordance with the present invention;

FIG. **2** is a perspective view of an ablation probe used in the system of FIG. **1**, wherein an electrode array is particularly shown retracted;

FIG. **3** is a perspective view of an ablation probe used in the system of FIG. **1**, wherein an electrode array is particularly shown deployed;

FIGS. **4**A-**4**E are perspective views illustrating one method of constructing the ablation probe of FIGS. **2** and **3**;

FIGS. **5**A-**5**D are perspective views illustrating another method of constructing the ablation probe of FIGS. **2** and **3**;

FIG. **7** illustrates a solid cross-section of an elongate member with divisions formed therein;

FIGS. **6**A-**6**E are perspective views illustrating still another method of constructing the ablation probe of FIGS. **2** and **3**;

FIG. **8** is a cross sectional view of an elongate member with an alternative arrangement of electrode tines that can be constructed using methods illustrated in FIGS. **4**A-**4**E and **5**A-**5**D;

FIG. **9** is a cross sectional view of another elongate member with an alternative arrangement of electrode tines that can be constructed using methods illustrated in FIGS. **4**A-**4**E, **5**A-**5**D, and **6**A-**6**E;

FIG. **10** is a cross sectional view of still another elongate member with an alternative arrangement of electrode tines that can be constructed using methods illustrated in FIGS. **4**A-**4**E, **5**A-**5**D, and **6**A-**6**E; and

FIGS. **11**A-**11**E are perspective views illustrating yet another method of constructing the ablation probe of FIGS. **2** and **3**.

## DETAILED DESCRIPTION OF THE EMBODIMENTS

FIG. **1** illustrates a tissue ablation system **2** constructed in accordance with one embodiment of the invention. The tissue ablation system **2** generally includes a probe assembly **4** configured for introduction into the body of a patient for ablative treatment of target tissue, and a radio frequency (RF) generator **6** configured for supplying RF energy to the probe assembly **4** in a controlled manner.

Referring specifically now to FIGS. **2** and **3**, the probe assembly **4** includes an elongate cannula **12**, a shaft **20** slidably disposed within the cannula **12**, and a plurality of electrodes **26** carried by the shaft **20**. The cannula **12** has a distal end **14**, a proximal end **16**, and a central lumen **18** extending through the cannula **12** between the distal end **14** and the proximal end **16**. The cannula **12** may be rigid, semi-rigid, or flexible depending upon the designed means for introducing the cannula **12** to the target tissue. The cannula **12** is composed of a suitable material, such as plastic, metal or the like, and has a suitable length, typically in the range from 5 cm to 30 cm, preferably from 10 cm to 20 cm. The length of the cannula **12** can also have other dimensions. If composed of an electrically conductive material, the cannula **12** is preferably covered with an insulative material. The cannula **12** has an outside cross sectional dimension consistent with its intended use, typically being from 0.5 mm to 5 mm, usually from 1.3 mm to 4 mm. The cannula **12** may have an inner cross sectional dimension in the range from 0.3 mm to 4 mm, preferably from 1 mm to 3.5 mm. The cannula **12** may also have other outside and inner cross sectional dimensions.

It can be appreciated that longitudinal translation of the shaft **20** relative to the cannula **12** in a distal direction **40** deploys the electrode tines **26** from the distal end **14** of the cannula **12** (FIG. **3**), and longitudinal translation of the shaft **20** relative to the cannula **12** in a proximal direction **42** retracts the shaft **20** and the electrode tines **26** into the distal end **14** of the cannula **12** (FIG. **2**). The shaft **20** comprises a distal end **22** and a proximal end **24**. Like the cannula **12**, the shaft **20** is composed of a suitable material, such as plastic, metal or the like. As will be described in further detail below, the material from which the shaft **20** is constructed will ultimately depend on the material from which the electrodes **26** are composed and the manner in which the electrodes **26** are secured to the shaft **20**.

In the illustrated embodiment, each electrode **26** takes the form of an electrode tine, which resembles the shape of a needle or wire. Each of the electrodes **26** is in the form of a small diameter metal element, which can penetrate into tissue as it is advanced from a target site within the target region. In some embodiments, distal ends **66** of the electrodes **26** may be honed or sharpened to facilitate their ability to penetrate tissue. The distal ends **66** of these electrodes **26** may be hardened using conventional heat treatment or other metallurgical processes. They may be partially covered with insu-

Petitioner's Exhibit 1027
Avanos v. Stratus

lation, although they will be at least partially free from insulation over their distal portions.

When deployed from the cannula **12**, the array **30** of electrodes **26** is placed in a three-dimensional configuration that usually defines a generally ellipsoidal or spherical volume having a periphery with a maximum radius in the range from 0.5 to 4 cm. The electrodes **26** are resilient and pre-shaped to assume a desired configuration when advanced into tissue. In the illustrated embodiment, the electrodes **26** diverge radially outwardly from the cannula **12** in a uniform pattern, i.e., with the spacing between adjacent electrodes **26** diverging in a substantially uniform and/or symmetric pattern. In the illustrated embodiment, the electrodes **26** also evert proximally, so that they face partially or fully in the proximal direction when fully deployed.

In exemplary embodiments, pairs of adjacent electrodes **26** can be spaced from each other in similar or identical, repeated patterns and can be symmetrically positioned about an axis of the shaft **20**. It will be appreciated that a wide variety of particular patterns can be provided to uniformly cover the region to be treated. It should be noted that although a total of six electrodes **26** are illustrated in FIG. **3**, in other embodiments, the probe assembly **4** can have more or fewer than six electrodes **26**. It should be noted that the shape and configuration of the electrodes **26** should not be limited to that described previously, and that the electrodes **26** may have other pre-formed shapes, such as a spiral shape or a dove-tail shape, and may be spaced from each other in a non-uniform pattern.

The electrodes **26** can be made from a variety of electrically conductive elastic materials. Very desirable materials of construction, from a mechanical point of view, are materials which maintain their shape despite being subjected to high stress. Certain "super-elastic alloys" include nickel/titanium alloys, copper/zinc alloys, or nickel/aluminum alloys. Alloys that may be used are also described in U.S. Pat. Nos. 3,174,851, 3,351,463, and 3,753,700, the disclosures of which are hereby expressly incorporated by reference. The electrodes **26** may also be made from any of a wide variety of stainless steels. The electrodes **26** may also include the Platinum Group metals, especially platinum, rhodium, palladium, rhenium, as well as tungsten, gold, silver, tantalum, and alloys of these metals. These metals are largely biologically inert. They also have significant radiopacity to allow the electrodes **26** to be visualized in-situ, and their alloys may be tailored to accomplish an appropriate blend of flexibility and stiffness. They may be coated onto the electrodes **26** or be mixed with another material used for construction of the electrodes **26**.

The electrodes **26** have generally uniform widths and rectangular cross-sections. In this manner, the electrodes **26** can be easily formed from the distal end of the shaft **20**, as will be described in further detail below. The rectangular cross-sections also make the electrodes **26** stiffer in one direction (e.g., the transverse direction) and more flexible in another direction (e.g., the radial direction). By increasing transverse stiffness, proper circumferential alignment of the electrodes **26** within the lumen **18** of the cannula **12** is enhanced. As will be described in further detail below, the widths of the electrodes **26** may be non-uniform, and the cross-sections of the electrodes **26** may be non-rectangular. Exemplary electrodes will have a width (in the circumferential direction) in the range from 0.2 mm to 0.6 mm, preferably from 0.35 mm to 0.40 mm, and a thickness (in the radial direction) in the range from 0.05 mm to 0.3 mm, preferably from 0.1 mm to 0.2 mm.

In the illustrated embodiment, the RF current is delivered to the electrode array **30** in a monopolar fashion, which means that current will pass from the electrode array **30**, which is configured to concentrate the energy flux in order to have an injurious effect on the surrounding tissue, and a dispersive electrode (not shown), which is located remotely from the electrode array **30** and has a sufficiently large area (typically 130 $cm^2$ for an adult), so that the current density is low and non-injurious to surrounding tissue. In the illustrated embodiment, the dispersive electrode may be attached externally to the patient, e.g., using a contact pad placed on the patient's flank.

Alternatively, the RF current is delivered to the electrode array **30** in a bipolar fashion, which means that current will pass between two electrodes ("positive" and "negative" electrodes) of the electrode array **30**, or between the electrodes of the electrode array **30** and the electrodes of another array ("positive" and "negative" electrode arrays). In a bipolar arrangement, the positive and negative electrodes or electrode arrays will be insulated from each other in any regions where they would or could be in contact with each other during the power delivery phase.

Returning to FIGS. **2** and **3**, the probe assembly **4** further includes a handle assembly **27**, which includes a member **28** mounted to the proximal end **24** of the shaft **20**, and a handle sleeve **29** mounted to the proximal end **16** of the cannula **12**. The handle member **28** is slidably engaged with the handle sleeve **29** (and the cannula **20**). The handle member **28** also includes an electrical connector **38**, which allows the probe assembly **2** to be connected to the generator **6** during use. The electrical connector **38** is electrically coupled to the electrodes **26**. As will be described in further detail below, the electrical connector **38** can be conveniently coupled to the electrodes **26** via the shaft **20** (which will be electrically conductive), although in other embodiments, the connector **38** can be coupled to the electrodes **26** via separate wires (not shown). The handle member **28** and the handle sleeve **29** can be composed of any suitable rigid material, such as, e.g., metal, plastic, or the like.

Optionally, a marker (not shown) may be placed on the handle member **28** and/or on the proximal end **24** of the shaft **20** for indicating a rotational orientation or a position of the handle member **28** relative to the shaft **20** (and the electrodes **26**) during use. In some embodiments, the handle assembly **27** can have an indexing feature. For example, the proximal end **24** of the shaft **20** or the handle member **28** can have one or more keys that mate with respective slot(s) at the interior surface of the cannula **12** or the handle sleeve **29**. Such indexing feature allows circumferential alignment of the shaft **20** (and the array **30**) relative to the cannula **12**. Angle indexing devices that may be used include those described in U.S. patent application Ser. No. 10/317,796, entitled "Angle Indexer For Medical Devices", the entire disclosure of which is expressly incorporated by reference herein. In other embodiments, the handle member **28** may also include a locking mechanism (not shown) to temporarily lock against the shaft **20** to provide a more stable indexing. For example, the locking mechanism may include an axially-sliding clutch assembly that is slidable along an axis of the shaft **20** to thereby secure the handle member **28** against the shaft **20**. Other securing devices known in the art may also be used.

Referring back to FIG. **1**, the RF generator **6** is electrically connected to the electrical connector **38**, which may be directly or indirectly (e.g., via a conductor) electrically coupled to the electrode array **30**. The RF generator **6** is a conventional RF power supply that operates at a frequency in the range from 200 KHz to 1.25 MHz, with a conventional sinusoidal or non-sinusoidal wave form. Such power supplies are available from many commercial suppliers, such as Valleylab, Aspen, and Bovie. Most general purpose electrosur-

gical power supplies, however, operate at higher voltages and powers than would normally be necessary or suitable for vessel occlusion. Thus, such power supplies would usually be operated at the lower ends of their voltage and power capabilities. More suitable power supplies will be capable of supplying an ablation current at a relatively low voltage, typically below 150V (peak-to-peak), usually being from 50V to 100V. The power will usually be from 20W to 200W, usually having a sine wave form, although other wave forms would also be acceptable. Power supplies capable of operating within these ranges are available from commercial vendors, such as Boston Scientific Corporation of San Jose, California, which markets these power supplies under the trademarks RF2000 (100W) and RF3000 (200W).

Further details regarding electrode array-type probe arrangements are disclosed in U.S. Pat. No. 6,379,353, which is hereby expressly incorporated by reference.

Having generally described the system **2**, various processes that can be used to manufacture and secure electrode arrays to a probe shaft, while reducing the number of welds or bonds and the cross-sectional space required to house the electrode arrays, will now be described.

FIGS. **4**A-**4**E illustrate one process for manufacturing and securing a unibody electrode array onto a shaft. First, an elongate member **200** is provided (FIG. **4**A). In the illustrated embodiment, the elongate member **200** is a hollow tube having a cylindrical wall **206** with a lumen **208** extending therein from a distal end **202** to a proximal end **204** of the tubular member **200**. The tubular member **200** is composed of a suitable electrically conductive material, such as any of the materials described previously with reference to the electrodes **26**.

Next, a plurality of divisions **210** are formed through the wall **206** of the tubular member **200** using suitable means, such as laser cutting, mechanical cutting, chemical etching, etc. (FIG. **4**B). The divisions **210** extend from the distal end **202** of the tubular member **200** towards the proximal end **204** of the tubular member **200** to form a plurality of tines **212**. In the illustrated embodiment, the divisions **210** extend along the tubular member **200** parallel to the longitudinal axis **214** of the tubular member **200**. The divisions **210** do not extend past the proximal end **204** of the tubular member **200**, so that a common electrode base **216** for supporting the tines **212** is formed at the proximal end **204** of the tubular member **200**. The distal tips of the tines **212** can be honed or sharpened, so that they are capable of penetrating tissue.

In the illustrated embodiment, six divisions **210** are formed in the wall **206**, resulting in six tines **212**. Alternatively, other numbers of tines can be formed from the tubular member **200** by forming a lesser or greater number of divisions **210** within the wall **206**. In the embodiment illustrated in FIG. **4**B, the divisions **210** are slits formed through the wall **206**, resulting in tightly spaced tines **212** at the electrode base **216**. Alternatively, the divisions **210** can take the form of slots having finite widths, resulting in loosely spaced tines **212** at the electrode base **216** (FIG. **4**C). In this embodiment, three divisions **210** are formed in the wall **206**, resulting in three tines **212**.

After the tines **212** have been formed, they are bent into proximally everted shapes (FIG. **4**D). The tines **212** can then be heat treated, chemically treated, or processed by other methods, to set them in their bent configuration. It should be noted that the shape in which the tines **212** are bent is not limited to that shown in FIG. **4**D, and thus, can have other shapes or configurations.

Next, the common electrode base **216** is secured to a distal end of a probe shaft **218** (FIG. **4**E). The means used to secure the electrode base **216** to the probe shaft **218** will depend on the selected means for delivering RF energy to the tines **212**. For example, if the body of the probe shaft **218** is used to deliver RF energy to the tines **212**, in which case it will be composed of an electrically conductive material, the electrode base **216** can be secured to the probe shaft **218** by welding, soldering or brazing, such that electrode base **216** remains in electrical communication with the probe shaft **218**. If separate RF wires are used to deliver RF energy to the tines **212**, however, the electrode base **216** can be secured to the probe shaft by bonding with an electrically insulative agent.

As shown in the illustrated embodiment, constructing the tines **212** from the tubular member **200** obviates the need to attach the tines **212** to each other. Such technique also eliminates constructing each tine **212** individually, thereby reducing manufacturing time and improving manufacturing efficiency. Further, because such technique eliminates, or at least, reduces the total number of connections (e.g., welds, soldering) needed to secure the tines **212** to each other and/or to the shaft **218**, the resulting probe assembly can have a substantially reduced cross sectional dimension. That is, the cross-sectional profile of the tines **212** at the electrode base **210** will be equal to or less than the cross-sectional profile of the electrode base **210**, itself.

Before or after the electrode base **216**, with the tines **212**, are secured to the probe shaft **218**, an RF connector (not shown) can be secured to the proximal end of the probe shaft **218** and placed into electrical communication with the tines **212** via the probe shaft **218** or separate RF wires (not shown) extending through the lumen of the probe shaft **218**. The probe shaft **218** is then slidably mounted within a cannula (not shown) to form a probe assembly similar to the probe assembly **4** illustrated in FIGS. **1**-**3**.

In the process illustrated in FIGS. **4**A-**4**E, the electrode element (composed of the tines **212** and electrode base **216**) and shaft **218** are discrete members that are formed and then subsequently secured to each other. In other processes, the electrode element and probe shaft can be formed as a unibody structure. For example, FIGS. **5**A-**5**D illustrate one process for manufacturing a unibody electrode element and probe shaft. First, an elongate member **300** is provided (FIG. **5**A). In the illustrated embodiment, the elongate member **300** is a hollow tube having a cylindrical wall **306** with a lumen **308** extending therein from a distal end **302** to a proximal end **304** of the tubular member **300**. The tubular member **300** is composed of a suitable electrically conductive material, such as any of the materials described previously with reference to the electrodes **26**. Notably, the elongate member **300** is significantly longer than the previous elongate member **200**, since the elongate member **300** will also be used to form the probe shaft.

Next, a plurality of divisions **310** are formed through the wall **306** of the elongate member **300** using suitable means, such as laser cutting, mechanical cutting, chemical etching, etc. (FIG. **5**B). The divisions **310** extend from the distal end **302** of the elongate member **300** towards the proximal end **304** of the elongate member **300** to form a plurality of tine **312**. In the illustrated embodiment, the divisions **310** extend along the elongate member **300** parallel to a longitudinal axis **314** of the elongate member **300**. The divisions **310** do not extend past the proximal end **304** of the elongate member **300**, so that a relatively length probe shaft **318** remains, with the distal end of the probe shaft **316** forming an integrated common electrode base **316** for supporting the tine **312**. The distal tips of the tine **312** can be honed or sharpened, so that they are capable of penetrating tissue.

Petitioner's Exhibit 1027
Avanos v. Stratus

In the illustrated embodiment, six divisions **310** are formed in the wall **306**, resulting in six tine **312**. Alternatively, other numbers of tines can be formed from the tubular member **300** by forming a lesser or greater number of divisions **310** within the wall **306**. In the embodiment illustrated in FIG. **5**B, the divisions **310** are slits formed through the wall **306**, resulting in tightly spaced tines **312** at the electrode base **316**. Alternatively, the divisions **310** can take the form of slots having finite widths, resulting in loosely spaced tines **312** at the electrode base **316** (FIG. **5**C). In this embodiment, three divisions **310** are formed in the wall **306**, resulting in three tines **312**.

After the tines **312** have been formed, they are bent into proximally everted shapes (FIG. **5**D). The tines **312** can then be heat treated, chemically treated, or processed by other methods, to set them in their bent configuration. It should be noted that the shape in which the tines **312** are bent is not limited to that shown in FIG. **5**D, and thus, can have other shapes or configurations. Unlike the previous embodiment, the tine **312** are already secured to the integrated electrode base formed at the distal end of the probe shaft **316**. Thus, it can be appreciated that the process illustrated in FIGS. **5**A-**5**D has the same advantages as the process illustrated in FIGS. **4**A-**4**E, with the additional advantage of eliminating the need to separately secure the tine **312** to the shaft **318**, thereby reducing manufacturing time and improving manufacturing efficiency, as well as further reducing the cross-sectional profile of the resulting assembly.

An RF connector (not shown) can be secured to the proximal end of the probe shaft **318** and placed into electrical communication with the tines **312** via the probe shaft **318** or separate RF wires (not shown) extending through the lumen of the shaft **318**. The probe shaft **318** is then slidably mounted within a cannula (not shown) to form a probe assembly similar to the probe assembly **4** illustrated in FIGS. **1**-**3**.

In the above-described processes, the electrode element (composed of the tines and electrode base) is formed of a unibody structure. In other processes, the electrode element can be formed of discrete structures that are subsequently integrated. For example, FIGS. **6**A-**6**D illustrate one process for manufacturing and mounting a multi-member electrode element to a probe shaft. First, first and second elongate members **400** and **401** are provided (FIG. **6**A). In the illustrated embodiment, the first elongate member **400** is a hollow tube having a cylindrical wall **406** with a lumen **408** extending therein from a distal end **402** to a proximal end **404** of the tubular member **400**. The lumen **408** is size to allow the second tubular member **401** to be inserted therein. The second elongate member **401** is a hollow tube having a cylindrical wall **407** with a lumen **409** extending therein from a distal end **403** to a proximal end **405** of the tubular member **401**. The tubular members **400**, **401** are composed of a suitable electrically conductive material, such as any of the materials described previously with reference to the electrodes **26**.

Next, divisions **410**, **411** are formed through the respective walls **406**, **407** of the tubular members **400**, **401** using suitable means, such as laser cutting, mechanical cutting, chemical etching, etc. (FIG. **6**B). The divisions **412**, **413** extend from the respective distal ends **402**, **403** of the tubular members **400**, **401** towards the respective proximal ends **404**, **405** of the tubular members **400**, **401** to form respective pluralities of tines **412**, **413**. In the illustrated embodiment, the divisions **410**, **411** extend along the tubular members **400**, **401** parallel to the longitudinal axes **414**, **415** of the tubular members **400**, **401**. The divisions **412**, **413** do not extend past the respective proximal ends **404**, **405** of the tubular members **400**, **401**, so that common electrode bases **416**, **417** for supporting the tines **412**, **413** are formed. The distal tips of the tines **412**, **413** can be honed or sharpened, so that they are capable of penetrating tissue. In the illustrated embodiment, three divisions **410** are formed in the wall **406** of the first tubular member **400**, resulting in three tines **412**. Likewise, three divisions **422** are formed in the wall **407** of the second tubular member **401**, resulting in three tines **413**. Alternatively, other numbers of tines can be formed from the tubular members **400**, **401** by forming a lesser or greater number of divisions **410**, **411** within the respective walls **406**, **407**. In this embodiment, the divisions **410**, **411** take the form of slots having finite widths, resulting in loosely spaced tines **412**, **413** at the respective electrode bases **416**, **417**.

Next, the second tubular member **401** is coaxially secured within the lumen **408** of the first tubular member **400** (FIG. **6**C). In particular, the second tubular member **401** is oriented relative to the first tubular member **400**, such that the slots **410** of the first tubular member **400** circumferentially align with the tines **413** of the second tubular member **401**, and the slots **411** of the second tubular member **401** circumferentially align with the tines **412** of the first tubular member **400**. In addition, the second tubular member **401** is preferably shorter than the first tubular member **400**, so that after the two are secured together, the electrode base **417** of the second tubular member **401** is recessed distally within the electrode base **416** of the first tubular member **400**, as shown in phantom in

FIG. **6**C. As will be described in further detail below, this reduces the cross-sectional mounting area of the assembly. The means used to secure the second tubular member **401** within the first tubular member **400** will depend on the desired electrically characteristics of the resulting electrode elements, and in particular, whether the resulting electrode elements will have monopolar or bipolar functionality. If the former, the tubular members **400**, **401** will be electrically coupled to each other, in which case, the second tubular member **401** can be welded, soldered, or brazed within the first tubular member **400**. If the latter, the tubular members **400**, **401** will not be electrically coupled to each other, in which case, the second tubular member **401** is preferably bonded within the first tubular member **400** using a suitable electrically insulative bonding agent. Optionally, an electrically insulative layer (not shown) can be located between the tubular members **400**, **401** to ensure that they are electrically isolated from each other.

After the tines **412**, **413** have been formed, they are bent into proximally everted shapes (FIG. **6**D). The tines **412**, **413** can then be heat treated, chemically treated, or processed by other methods, to set them in their bent configuration. It should be noted that the shape in which the tines **420**, **430** is bent is not limited to that shown in FIG. **6**D.

Next, the common electrode base **416** of the first tubular member **400** is secured to a distal end of a probe shaft **418** (FIG. **6**E). This can be accomplished in the same manner as the previously described electrode base **216** of the tubular member **200** is secured to the probe shaft **218** illustrated in FIG. **4**E. Alternatively, one of the tubular members **400**, **401** can have a length that is longer than the other, such that a proximal portion of the tubular member with the longer length can be used as a probe shaft, as similarly discussed previously with reference to FIGS. **5**A-**5**D.

Thus, it can be appreciated that the process illustrated in FIGS. **6**A-**6**E has the same advantages as the process illustrated in FIGS. **4**A-**4**E, with the additional advantage that bipolar functionality can be incorporated into the resulting assembly. It is noted that the mounting area on the probe shaft **418** is only increased by the wall thickness of the first tubular member **400**, since the electrode base **417** of the second

tubular member **401** is distally recessed within the electrode base **416** of the first tubular member **400**, so that the distal edge of the probe shaft **418** abuts the proximal edge of the electrode base **416**.

An RF connector (not shown) can be secured to the proximal end of the probe shaft **418** and placed into electrical communication with the tines **412**, **413** via the probe shaft **418** or separate RF wires (not shown) extending through the lumen of the shaft **418**. The probe shaft **418** is then slidably mounted within a cannula (not shown) to form a probe assembly similar to the probe assembly **4** illustrated in FIGS. **1-3**.

It should be noted that the structure and geometry of the elongated members used to form the electrode elements and/or probe shafts are not limited to those described above, but can vary, depending on the desired application and results. For example, although the previously described elongated members are cylindrical in nature (i.e., they have circular cross-sectional profiles), an elongated member used to form electrode elements and/or probe shafts in accordance with the present invention can have other cross-sectional shapes, such as a elliptical, rectangular, triangular, pentagonal, octagonal, or other shapes.

Also, although the use of hollow tubular members has the advantage of providing a convenient means for forming low-profile tines with generally rectangular geometries, tines can be formed from solid tubular members as well. For example, FIG. **7** illustrates the solid cross-section of an elongate member **500** with divisions **510** formed therein using suitable means, such as mechanical or laser cutting. As can be seen, each division **510** is formed through the entire diameter of the elongated member **500** to produce two tines **512** with pie-shaped cross-sections. Thus, in the illustrated embodiment, three divisions **510** are formed to produce a total of six tines **512**. The tines **512** can then be subsequently shaped in the same manner that the previously described tines were shaped.

In addition, the geometrical characteristics of the divisions made through any given elongate member can be varied to select the different geometrical characteristics (e.g., shapes, profiles, orientations, and/or lengths) of the resulting tines.

For example, although the divisions formed through the walls of the previously described tubular members extend through the centers of the respective tubular members, thereby creating tines with generally rectangular cross-sections, divisions can be tangentially formed through the tubular member. For example, FIG. **8** illustrates the cross-section of an elongate member **600**, and in particular, a hollow tubular member, with divisions **610** formed through the wall **606** using suitable means, such as mechanical or laser cutting. As can be seen, each division **610** is a slit that is formed through the wall **606** of the tubular member **600** at a tangential angle, thereby creating tines **612** having generally trapezoidal cross-sections. Six divisions **610** are formed to create six tines **612**.

As another example, FIG. **9** illustrates the cross-section of another elongate member **700**, and in particular, a hollow tubular member, with divisions **710** formed through the wall **706** using suitable means, such as mechanical or laser cutting. In this embodiment, each division is a slot formed by providing a pair of tangential cuts **711** that extend through the wall **706** towards each other. Six divisions **710** are formed to create six tines **712** with generally triangular cross-sections.

Although the slots formed through the walls of the previously described tubular members were rectangular in nature, thereby resulting in tines with substantially uniform widths along their lengths, the slots can have other shapes. For example, FIG. **10** illustrates an elongate member **800**, and in particular, a hollow tubular member, with divisions **810** in the form of tapered slots that are formed through the wall **806** using suitable means, such as laser cutting, mechanical cutting, chemical etching, etc. As a result, triangular-shaped tines **812** that taper to a distal point are created.

Although the tines have been previously described to have the same geometrical characteristics for any given embodiment, the geometrical characteristics of the tines may differ within the same embodiment. For example, for a given embodiment, some of the divisions may be slits and other divisions may be slots. Or some of the slots may have a uniform width, and others may have a non-uniform width. Or some of the divisions may be longer than others to vary the lengths of the tines within the same embodiment.

Although the previously described processes utilized a preformed elongate member on which the divisions were formed, the divisions can be formed into a material that is then subsequently formed into an elongate member. FIGS. **11**A-**11**D illustrates an example of such a process. First, a rectangular, flat, sheet **900** having first and second opposing edges **902**, **904** and third and fourth opposing edges **906**, **908** is provided (FIG. **11**A). The sheet **900** is composed of a suitable electrically conductive material, such as any of the materials described previously with reference to the electrodes **26**.

Next, a plurality of divisions **910** are formed through the wall sheet **900** using suitable means, such as laser cutting, mechanical cutting, chemical etching, etc. (FIG. **11**B). The divisions **910** extend from the first end **902** of the sheet **900** towards the second opposing end **904** of the sheet **900** to form a plurality of tines **912**. The divisions **910** do not extend past the second end **904**, so that a common electrode base **916** for supporting the tines **912** is formed at the second end **904** of the sheet **900**. The distal tips of the tines **912** can be honed or sharpened, so that they are capable of penetrating tissue. In the illustrated embodiment, five divisions **910** are formed in the sheet **900**, resulting in six tines **912**. Alternatively, other numbers of tines can be formed from the sheet **900** by forming a lesser or greater number of divisions **910** therein. In the embodiment illustrated in FIG. **11**B, the divisions **910** are slits formed through the sheet **900**, resulting in tightly spaced tines **912** at the electrode base **916**. Alternatively, the divisions **910** can take the form of slots having finite widths, resulting in loosely spaced tines **912** at the electrode base **916** (FIG. **11**C). In this embodiment, two divisions **910** are formed in the sheet **900**, resulting in three tines **912**.

In the illustrated embodiment, the divisions **910** extend along the sheet **900** parallel to opposing third and fourth ends **906**, **908**, which result in rectangular tines. Alternatively, the divisions **910** may have other shapes, profiles, orientations, and/or lengths to form tines have other geometries. In the illustrated embodiment, the divisions **910** are made in a direction (or orientation) that is approximately perpendicular to a surface of the sheet **900**. Alternatively, the divisions **910** can be made at other directions (or orientations) to form desired cross sectional shapes for the tines **912**. In addition, instead of forming the tines with the same geometries, the tines may be formed with different geometries in the same embodiment.

Next, the third and fourth opposing ends **906**, **908** of the sheet **900** are rolled or bent towards each other to form an elongate member **901**, and in particular, a hollow tubular member (FIG. **11**D). The third and fourth opposing ends **906**, **908** can be abutted to form a seam **930**, and the affixed to each other using suitable means, such as welding, soldering, brazing, etc., to prevent the tubular member **901** from unwinding itself. In the illustrated embodiment, the tubular member **901** has an exterior cross sectional profile that is circular. Alternatively, the tubular member **901** can have other cross sectional shapes, such as an elliptical, rectangular, triangular, pentagonal, octagonal, or other shapes. In an alternative pro-

Petitioner's Exhibit 1027
Avanos v. Stratus

cess, instead of rolling or bending the sheet **900** to form the tubular member **901** after the tines **912** are made, the sheet **900** can be rolled or bent into the elongate member **901** before the tines **912** are made. In other processes, instead of forming the tines **912** using a single sheet, a plurality of sheets can be used to form the tines **912**. In such cases, after the sheets are rolled or bent into respective elongate members, the elongate members can be placed coaxially relative to each other, as similarly discussed previously with reference to FIG. **6**C.

After the tines **912** have been formed, they are bent into proximally everted shapes (FIG. **11**E). The tines **912** can then be heat treated, chemically treated, or processed by other methods, to set them in their bent configuration. It should be noted that the shape in which the tines **912** are bent is not limited to that shown in FIG. **11**E, and thus, can have other shapes or configurations. In other processes, instead of shaping the tines **912** after the sheet **900** is rolled or bent into the elongate member **901**, the tines **912** can be shaped prior to rolling or bending the sheet **900** into the tubular member **901**.

Next, the common electrode base **916** is secured to a distal end of a probe shaft, the RF connector is secured to the proximal end of the probe shaft, and the probe shaft is slidably mounted in a cannula in the same manner previously described with respect to FIG. **4**E. In an alternative process, the sheet **900** can have a relatively longer length, such that when the sheet **900** is rolled or bent into the elongate member **901**, the proximal portion of the elongate member **901** can be used as the probe shaft, as similarly discussed previously with reference to FIGS. **5**A-**5**D.

Although particular embodiments of the present invention have been shown and described, it should be understood that the above discussion is not intended to limit the present invention to these embodiments. It will be obvious to those skilled in the art that various changes and modifications may be made without departing from the spirit and scope of the present invention. In addition, an illustrated embodiment needs not have all the aspects or advantages of the invention shown. An aspect or an advantage described in conjunction with a particular embodiment of the present invention is not necessarily limited to that embodiment and can be practiced in any other embodiments of the present invention even if not so illustrated. Thus, the present invention is intended to cover alternatives, modifications, and equivalents that may fall within the spirit and scope of the present invention as defined by the claims.

What is claimed:

**1**. A method of manufacturing an ablation probe, comprising:

forming divisions from a first end of a flat, electrically conductive, sheet towards an opposing second end of the sheet to form a plurality of electrode tines and a common electrode base from the sheet;

bending opposing third and fourth ends of the sheet towards each other; and

affixing the third and fourth ends relative to each other to form an elongated member.

**2**. The method of claim **1**, further comprising mounting the electrode base to a probe shaft while the sheet is bent.

**3**. The method of claim **1**, wherein the elongate member comprises a probe shaft.

**4**. The method of claim **1**, wherein the third and fourth ends of the sheet abut each other when the sheet is bent.

**5**. The method of claim **1**, wherein the sheet is bent into a cylindrical configuration, and the probe shaft is cylindrical.

**6**. The method of claim **1**, wherein the divisions are slits, such that the electrode tines are tightly spaced at the electrode base.

**7**. The method of claim **1**, wherein the divisions are slots, such that the electrode tines are loosely spaced at the electrode base.

**8**. The method of claim **1**, further comprising electrically coupling the electrode tines to the probe shaft.

**9**. The method of claim **1**, further comprising mounting a radio frequency connector to the probe shaft and electrically coupling the connector to the electrode tines.

**10**. The method of claim **1**, further comprising slidably mounting the probe shaft within a cannula, whereby the plurality of electrode tines can be alternately placed in a deployed configuration and a retractable configuration.

**11**. The method of claim **1**, further comprising shaping the electrode tines.

**12**. The method of claim **11**, wherein the electrode tines are shaped to proximally evert.

**13**. The method of claim **1**, further comprising:

forming divisions from a first end of another flat, electrically conductive, sheet towards an opposing second end of the other sheet to form another plurality of electrode tines and another common electrode base from the sheet;

bending the third and fourth ends of the other sheet towards each other; and

coaxially securing the electrode base and the other electrode relative to each other.

* * * * *