US 20070203486A1

(19) United States

(12) Patent Application Publication

(10) Pub. No.: US 2007/0203486 A1

(43) Pub. Date: Aug. 30, 2007

Young

(54) **ABLATION PROBE WITH DISTAL INVERTED ELECTRODE ARRAY**

(75) Inventor: **Kimbolt Young**, Newtonville, MA (US)

Correspondence Address:
Vista IP Law Group LLP
2040 MAIN STREET, 9TH FLOOR
IRVINE, CA 92614 (US)

(73) Assignee: **BOSTON SCIENTIFIC SCIMED, INC.**, Maple Grove, MN (US)

(21) Appl. No.: **11/742,526**

(22) Filed: **Apr. 30, 2007**

Related U.S. Application Data

(63) Continuation of application No. 10/966,677, filed on Oct. 14, 2004, now Pat. No. 7,229,438.

Publication Classification

(51) **Int. Cl.**
A61B 18/14 (2006.01)

(52) **U.S. Cl.** **606/41**

(57) **ABSTRACT**

An ablation device includes a cannula having a distal end and a lumen, an array of electrodes deployable from within the lumen, each of the electrodes having a first configuration when inside the lumen, and a second configuration when unconfined outside the lumen, the electrodes having respective distal ends that point at least partially towards a distal direction when deployed, and an operative electrode secured to the distal end of the cannula. In one embodiment, the operative electrode has a shape that is different from the array of electrodes. In another embodiment, the operative electrode is not retractable within the lumen.

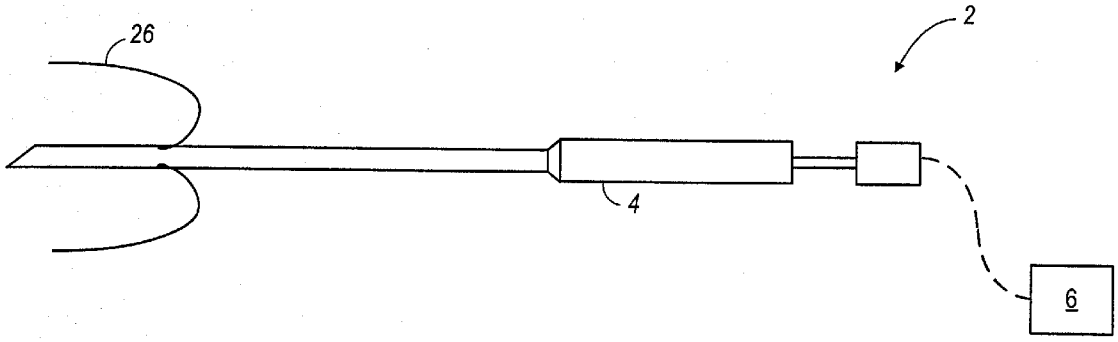

Petitioner's Exhibit 1028
Avanos v. Stratus

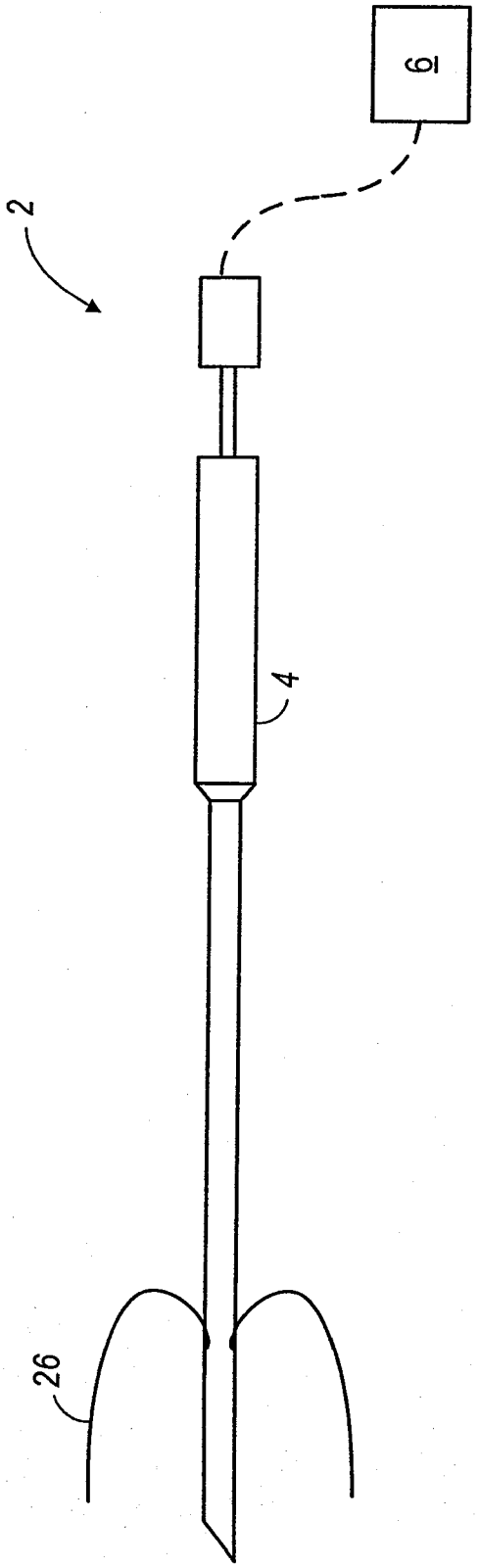

FIG. 1

Petitioner's Exhibit 1028
Avanos v. Stratus

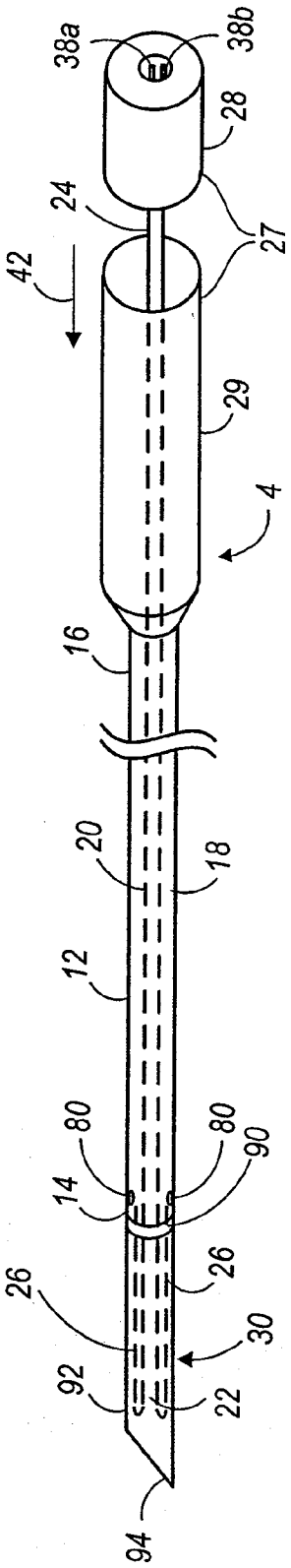
38a
38b
28
24
27
42
29
4
16
20
18
12
80
80
90
14
26
26
30
92
22
94

FIG. 2

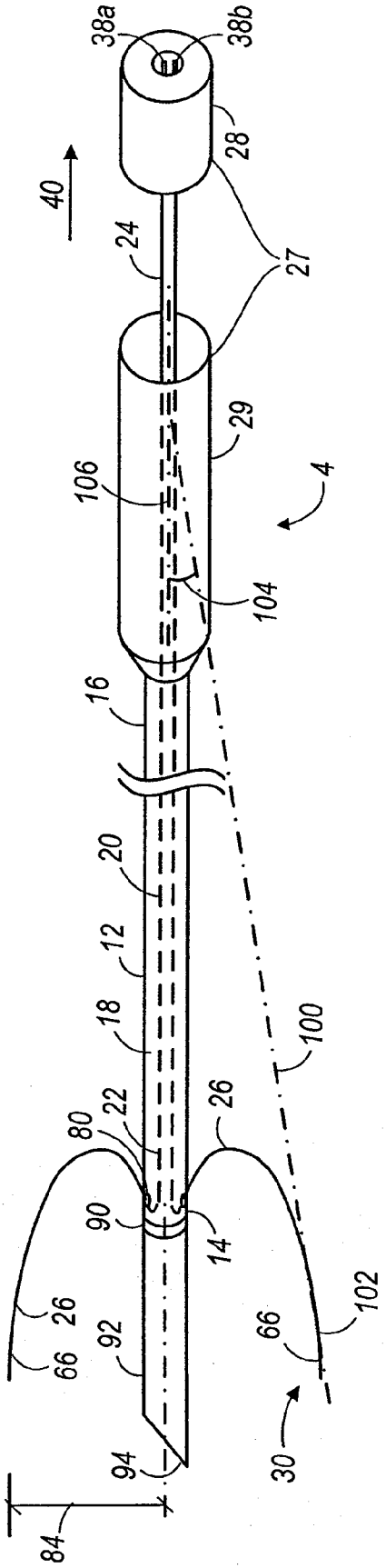
38a
38b
28
40
24
27
29
106
4
104
16
20
12
18
100
80
22
26
90
14
26
66
92
102
66
94
30
84

FIG. 3

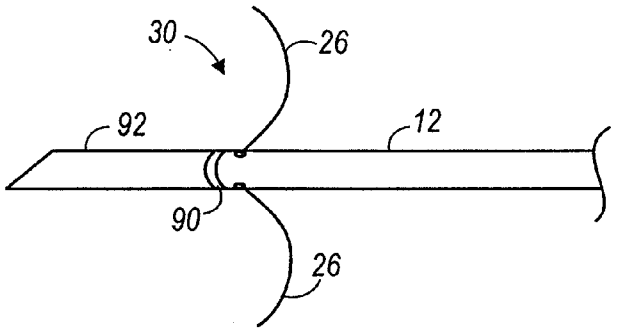

FIG. 4A

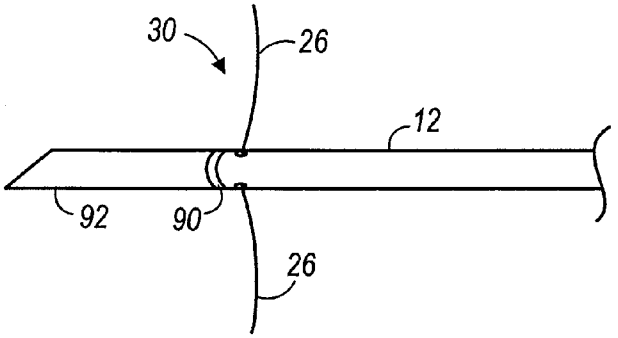

FIG. 4B

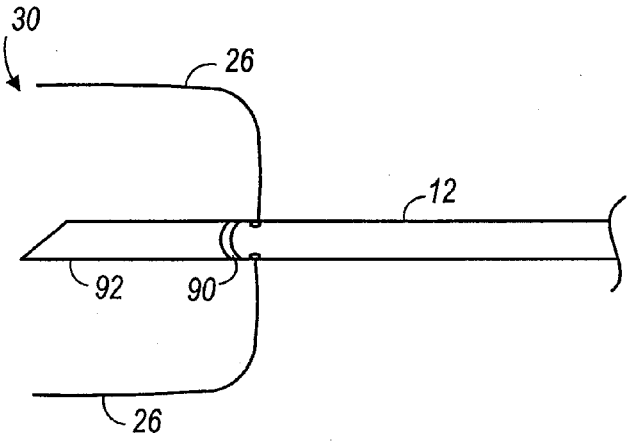

FIG. 4C

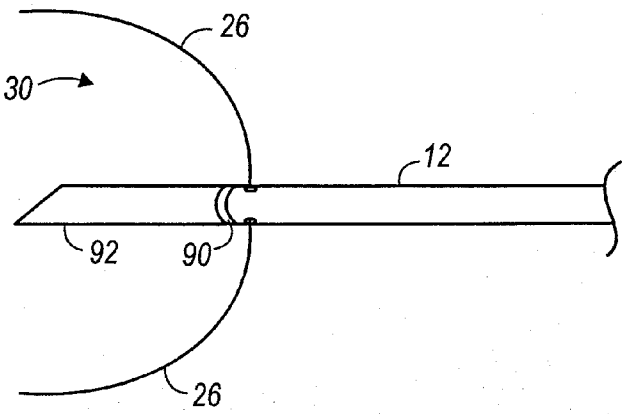

FIG. 4D

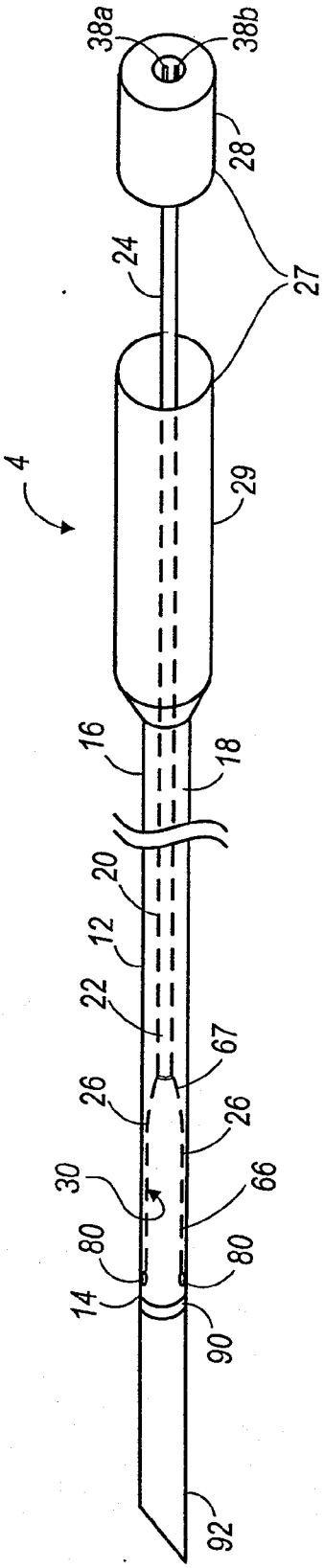
38a
38b
28
24
27
4
29
16
18
20
12
22
67
26
26
30
66
80
80
14
90
92

FIG. 5

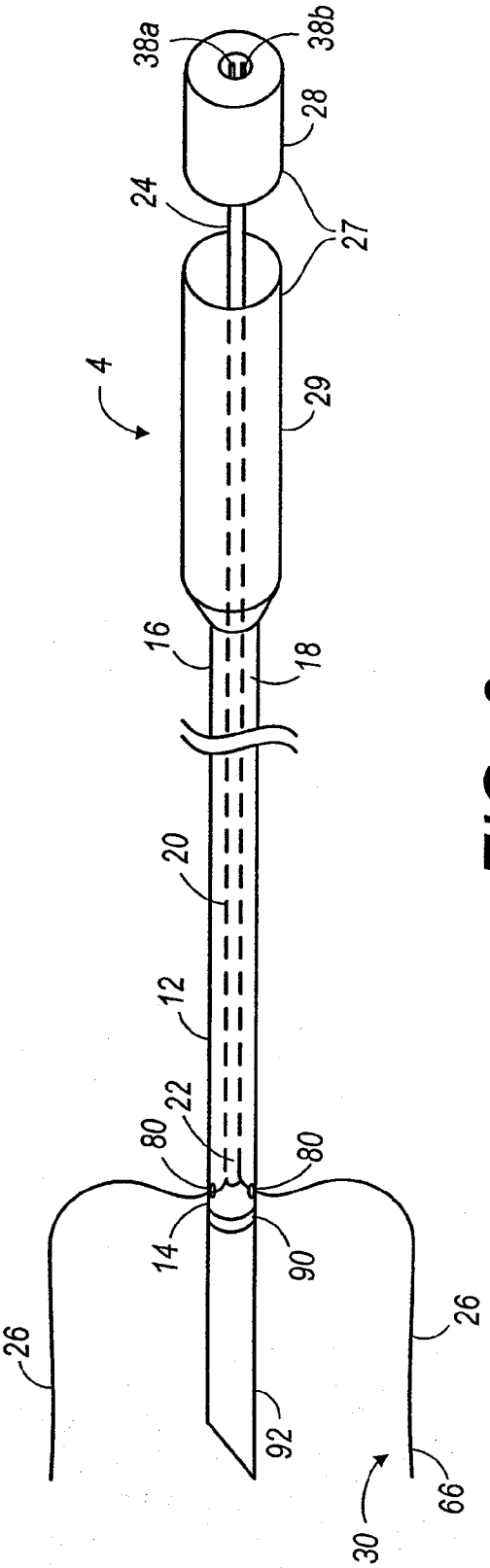
38a
38b
28
24
27
4
29
16
18
20
12
22
80
80
14
90
26
26
92
30
66

FIG. 6

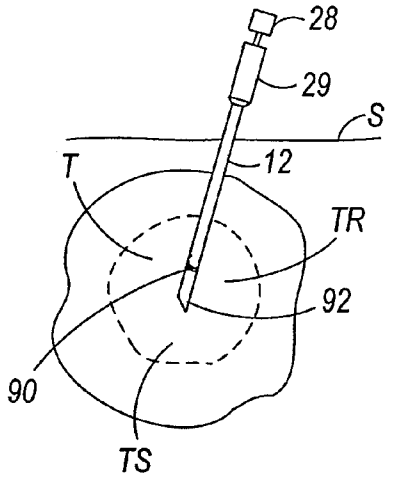

FIG. 7A

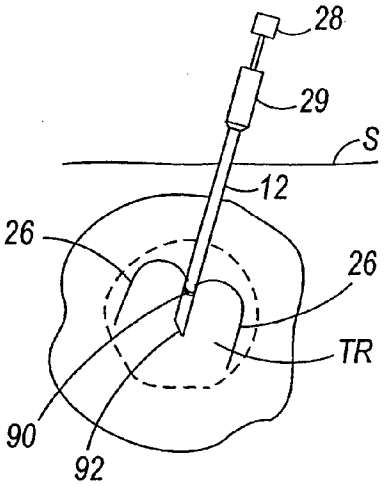

FIG. 7B

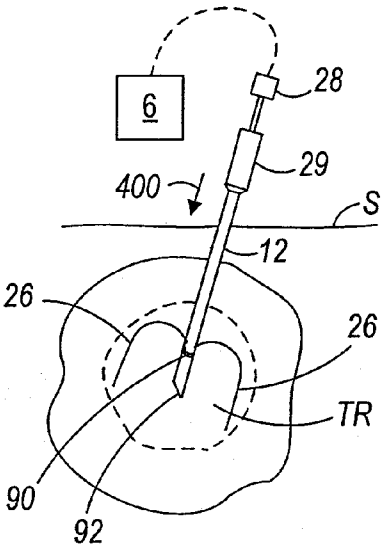

FIG. 7C

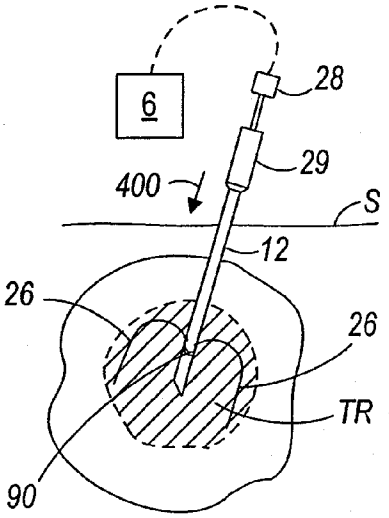

FIG. 7D

ABLATION PROBE WITH DISTAL INVERTED ELECTRODE ARRAY

FIELD OF THE INVENTION

[0001] The field of the invention relates generally to radio frequency (RF) electrosurgical probes for the treatment of tissue, and more particularly, to electrosurgical probes having multiple tissue-penetrating electrodes that are deployed in an array to treat volumes of tissue.

BACKGROUND OF THE INVENTION

[0002] Tissue may be destroyed, ablated, or otherwise treated using thermal energy during various therapeutic procedures. Many forms of thermal energy may be imparted to tissue, such as radio frequency electrical energy, microwave electromagnetic energy, laser energy, acoustic energy, or thermal conduction. In particular, radio frequency ablation (RFA) may be used to treat patients with tissue anomalies, such as liver anomalies and many primary cancers, such as cancers of the stomach, bowel, pancreas, kidney and lung. RFA treatment involves destroying undesirable cells by generating heat through agitation caused by the application of alternating electrical current (radio frequency energy) through the tissue.

[0003] Various RF ablation devices have been suggested for this purpose. For example, U.S. Pat. No. 5,855,576 describes an ablation apparatus that includes a plurality of electrode tines deployable from a cannula. Each of the tines includes a proximal end that is coupled to a generator, and a distal end that may project from a distal end of the cannula. The tines are arranged in an array with the distal ends located generally radially and uniformly spaced apart from the distal end of the cannula. The tines may be energized in a bipolar mode (i.e., current flows between closely spaced electrode tines) or a monopolar mode (i.e., current flows between one or more electrode tines and a larger, remotely located common electrode) to heat and necrose tissue within a precisely defined volumetric region of target tissue. To assure that the target tissue is adequately treated and/or to limit damaging adjacent healthy tissues, the array of tines may be arranged uniformly, e.g., substantially evenly and symmetrically spaced-apart so that heat is generated uniformly within the desired target tissue volume.

[0004] When using the above described devices in percutaneous interventions, the cannula is generally inserted through a patient's skin, and the tines are deployed out of the distal end of the cannula to penetrate target tissue. Particularly, the tines are deployed such that the distal ends of the tines initially exit from a distal opening at the cannula. As the tines are further deployed, the distal ends of the tines evert radially away from an axis of the cannula, and then back towards a proximal end of the cannula (so that they face substantially in the proximal direction when fully deployed). As such, the tines/electrodes of the above described device each has a profile that resembles a parabola after the electrodes are deployed. The tines are then energized to ablate the target tissue.

[0005] Sometimes, a vessel or sensitive tissue may be located at or adjacent to a distal region of a target tissue that is to be ablated. In such cases, use of the above described devices may perforate the blood vessel and/or injure the sensitive tissue. Particularly, deploying the electrodes at the distal end of the cannula such that the deployed electrodes evert proximally towards a proximal end increases the risk that the electrodes will injure the blood vessel or the sensitive tissue as the electrodes are being deployed.

[0006] In addition, when using heat to kill tissue at a target site, the effective rate of tissue ablation is highly dependent on how much of the target tissue is heated to a therapeutic level. In certain situations, complete ablation of target tissue that is adjacent a vessel may be difficult or impossible to perform, since significant bloodflow may draw the produced heat away from the vessel wall, resulting in incomplete necrosis of the tissue surrounding the vessel. This phenomenon, which causes the tissue with greater blood flow to be heated less, and the tissue with lesser blood flow to be heated more, is known as the "heat sink" effect. It is believed that the heat sink effect is more pronounced for ablation of tissue adjacent large vessels that are more than 3 millimeters (mm) in diameter. Due to the increased vascularity of the liver, the heat sink effect may cause recurrence of liver tumors after a radio frequency ablation.

[0007] Thus, there remains a need to provide for improved ablation devices.

SUMMARY OF THE INVENTION

[0008] In accordance with some embodiments, an ablation device includes a cannula having a distal end and a lumen, an array of electrodes deployable from within the lumen, each of the electrodes having a first configuration when inside the lumen, and a second configuration when unconfined outside the lumen, the electrodes having respective distal ends that point at least partially towards a distal direction when deployed, and an operative electrode secured to the distal end of the cannula, the operative electrode having a shape that is different from the array of electrodes.

[0009] In accordance with other embodiments, an ablation device includes a cannula having a distal end and a lumen, an array of electrodes deployable from within the lumen, each of the electrodes having a first configuration when inside the lumen, and a second configuration when unconfined outside the lumen, the electrodes having respective distal ends that point at least partially towards a distal direction when deployed, and an operative electrode secured to the distal end of the cannula, the operative electrode not retractable within the lumen.

[0010] In accordance with other embodiments, an ablation device includes a cannula having a distal end and a lumen, and only one array of electrodes deployable from within the lumen, each of the electrodes having a first configuration when inside the lumen, and a second configuration when unconfined outside the lumen, the electrodes having respective distal ends that point at least partially towards a distal direction when deployed.

[0011] In accordance with other embodiments, a method of ablating tissue includes deploying an array of electrodes such that the electrodes at least partially circumscribe a tissue region, deploying an operative electrode within the tissue region, and using the deployed array of electrodes and the operative electrode to ablate the tissue region. The deployed electrodes have respective distal ends that point at least partially towards a distal direction.

[0012] In accordance with other embodiments, a method of ablating tissue includes deploying an array of electrodes

Petitioner's Exhibit 1028
Avanos v. Stratus

within a tissue region such that the array of electrodes span at least a portion of the tissue region, pushing the deployed electrodes distally to compress tissue within the tissue region, and delivering energy to the array of electrodes to ablate the tissue within the tissue region.

[0013] Other and further aspects and features of the invention will be evident from reading the following detailed description of the preferred embodiments, which are intended to illustrate, not limit, the invention.

BRIEF DESCRIPTION OF THE DRAWINGS

[0014] The drawings illustrate the design and utility of preferred embodiments of the present invention. It should be noted that the figures are not drawn to scale and that elements of similar structures or functions are represented by like reference numerals throughout the figures. In order to better appreciate how the above-recited and other advantages and objects of the present inventions are obtained, a more particular description of the present inventions briefly described above will be rendered by reference to specific embodiments thereof, which are illustrated in the accompanying drawings. Understanding that these drawings depict only typical embodiments of the invention and are not therefore to be considered limiting of its scope, the invention will be described and explained with additional specificity and detail through the use of the accompanying drawings in which:

[0015] FIG. **1** is a schematic diagram of a tissue ablation system in accordance with some embodiments of the invention;

[0016] FIG. **2** is a perspective view of the ablation probe used in the system of FIG. **1**, wherein an electrode array is particularly shown retracted;

[0017] FIG. **3** is a perspective view of the ablation probe of FIG. **2**, wherein an electrode array is particularly shown deployed;

[0018] FIG. **4**A-**4**D are side views of ablation probes in accordance with other embodiments of the invention, showing the ablation probes having electrode arrays with different configurations;

[0019] FIG. **5** is a perspective view of an ablation probe used in the system of FIG. **1** in accordance with other embodiments, wherein an electrode array is particularly shown retracted;

[0020] FIG. **6** is a perspective view of the ablation probe of FIG. **5**, wherein the electrode array is particularly shown deployed; and

[0021] FIGS. **7**A-**7**D are cross-sectional views, showing a method for treating tissue, in accordance with some embodiments of the invention.

DETAILED DESCRIPTION OF THE EMBODIMENTS

[0022] FIG. **1** illustrates a tissue ablation system **2** constructed in accordance with some embodiments of the invention. The tissue ablation system **2** includes a probe assembly **4** configured for introduction into the body of a patient for ablative treatment of target tissue, and a radio frequency (RF) generator **6** configured for supplying RF energy to the probe assembly **4** in a controlled manner.

[0023] Referring specifically now to FIGS. **2** and **3**, the probe assembly **4** includes an elongate cannula **12**, a shaft **20** slidably disposed within the cannula **12**, and an array **30** of electrodes **26** carried by the shaft **20**. The cannula **12** has a distal end **14**, a proximal end **16**, and a central lumen **18** extending through the cannula **12** between the distal end **14** and the proximal end **16**. The cannula **12** may be rigid, semi-rigid, or flexible depending upon the designed means for introducing the cannula **12** to the target tissue. The cannula **12** is composed of a suitable material, such as plastic, metal or the like, and has a suitable length, typically in the range from 5 cm to 30 cm, preferably from 10 cm to 20 cm. The length of the cannula **12** can also have other dimensions. If composed of an electrically conductive material, the cannula **12** is preferably covered with an insulative material. The cannula **12** has an outside cross sectional dimension consistent with its intended use, typically being from 0.5 mm to 5 mm, usually from 1.3 mm to 4 mm. The cannula **12** may have an inner cross sectional dimension in the range from 0.3 mm to 4 mm, preferably from 1 mm to 3.5 mm. The cannula **12** can also have other outside and inner cross sectional dimensions in other embodiments.

[0024] It can be appreciated that longitudinal translation of the shaft **20** relative to the cannula **12** in a proximal direction **40** deploys the electrode tines **26** from the distal end **14** of the cannula **12** (FIG. **3**), and longitudinal translation of the shaft **20** relative to the cannula **12** in a distal direction **42** retracts the electrode tines **26** into the distal end **14** of the cannula **12** (FIG. **2**). The shaft **20** comprises a distal end **22** and a proximal end **24**. Like the cannula **12**, the shaft **20** is composed of a suitable material, such as plastic, metal or the like.

[0025] In the illustrated embodiment, each electrode **26** takes the form of an electrode tine, which resembles the shape of a needle or wire. Each of the electrodes **26** is in the form of a small diameter metal element, which can penetrate into tissue as it is advanced from a target site within the target region. In some embodiments, distal ends **66** of the electrodes **26** may be honed or sharpened to facilitate their ability to penetrate tissue. The distal ends **66** of these electrodes **26** may be hardened using conventional heat treatment or other metallurgical processes. They may be partially covered with insulation, although they will be at least partially free from insulation over their distal portions.

[0026] When deployed from the cannula **12**, the array **30** of electrodes **26** has a deployed configuration that defines a volume having a periphery with a radius **84** in the range from 0.5 to 4 cm. However, in other embodiments, the maximum radius can be other values. The electrodes **26** are resilient and pre-shaped to assume a desired configuration when advanced into tissue. In the illustrated embodiments, the electrodes **26** diverge radially outwardly from the cannula **12** in a uniform pattern, i.e., with the spacing between adjacent electrodes **26** diverging in a substantially uniform and/or symmetric pattern.

[0027] In the illustrated embodiments, each electrode **26** has a flared curvilinear profile that resembles a portion of a parabola. Particularly, when the electrodes **26** are deployed, the electrodes **26** each extends proximally, and then everts distally, such that each electrode **26** forms a profile that

Petitioner's Exhibit 1028
Avanos v. Stratus

resembles at least a portion of a parabola. As shown in FIG. **3**, the deployed electrode **26** is located at the distal end **14** of the cannula, and each deployed electrode **26** has a distal end that points at least partially towards a distal direction. Such configuration is advantageous in that it allows the deployed electrodes **26** to be used to compress tissue that is circumscribed by the deployed electrodes **26**, thereby reducing blood flow to the tissue and reducing an amount of heat that could be carried away by blood flow. Also, use of the electrodes **26** having the configuration shown in FIG. **3** can prevent or substantially reduce the risk of injury to vessel or sensitive tissue that is adjacent to a distal region of a target area. The distal end **66** of the electrode **26** is considered pointing at least partially towards a distal direction when an instantaneous tangent **100** at a point **102** along the distal end **66** of the electrode **26** forms an angle **104** that is less than 90° with an axis **106** of the cannula **12**. It should be noted that the electrodes **26** should not be limited to having the profiles shown in FIG. **3**, and that in alternative embodiments, the electrodes **26** can have different deployed profiles. For examples, in other embodiments, the electrodes **26** can each have a flared deployed profile (FIG. **4**A), a substantially rectilinear deployed profile (FIG. **4**B), a deployed profile that resembles a 90° bent (FIG. **4**C), or a deployed profile that resembles a portion (e.g., a quarter) of a circle or an ellipse (FIG. **4**D).

[**0028**] It should be noted that although a total of two electrodes **26** are illustrated in FIG. **3**, in other embodiments, the probe assembly **4** can have more or fewer than two electrodes **26**. In exemplary embodiments, pairs of adjacent electrodes **26** can be spaced from each other in similar or identical, repeated patterns and can be symmetrically positioned about an axis of the shaft **20**. It will be appreciated that a wide variety of particular patterns can be provided to uniformly cover the region to be treated. In other embodiments, the electrodes **26** may be spaced from each other in a non-uniform pattern.

[**0029**] The electrodes **26** can be made from a variety of electrically conductive elastic materials. Very desirable materials of construction, from a mechanical point of view, are materials which maintain their shape despite being subjected to high stress. Certain "super-elastic alloys" include nickel/titanium alloys, copper/zinc alloys, or nickel/aluminum alloys. Alloys that may be used are also described in U.S. Pat. Nos. 3,174,851, 3,351,463, and 3,753,700, the disclosures of which are hereby expressly incorporated by reference. The electrodes **26** may also be made from any of a wide variety of stainless steels. The electrodes **26** may also include the Platinum Group metals, especially platinum, rhodium, palladium, rhenium, as well as tungsten, gold, silver, tantalum, and alloys of these metals. These metals are largely biologically inert. They also have significant radiopacity to allow the electrodes **26** to be visualized in-situ, and their alloys may be tailored to accomplish an appropriate blend of flexibility and stiffness. They may be coated onto the electrodes **26** or be mixed with another material used for construction of the electrodes **26**.

[**0030**] The electrodes **26** have generally uniform widths and rectangular cross-sections. The rectangular cross-sections make the electrodes **26** stiffer in one direction (e.g., the transverse direction) and more flexible in another direction (e.g., the radial direction). By increasing transverse stiffness, proper circumferential alignment of the electrodes **26** within the lumen **18** of the cannula **12** is enhanced. In other embodiments, the widths of the electrodes **26** may be non-uniform, and the cross-sections of the electrodes **26** may be non-rectangular. Exemplary electrodes will have a width (in the circumferential direction) in the range from 0.2 mm to 0.6 mm, preferably from 0.35 mm to 0.40 mm, and a thickness (in the radial direction) in the range from 0.05 mm to 0.3 mm, preferably from 0.1 mm to 0.2 mm.

[**0031**] In the illustrated embodiments, the probe assembly **4** further includes an electrode **92** secured to the cannula **12**. The electrode **92** is operative in conjunction with the array **30** to deliver energy to tissue. The electrodes **26** in the array **30** are positive (or active) electrodes while the operative electrode **92** is a negative (or return) electrode for completing energy path(s). In such cases, energy is directed from the electrodes **26** in the array **30** radially inward towards the electrode **92**. Alternatively, the electrode **92** can be active electrode while the electrodes **26** in the array **30** are return electrodes for completing energy path(s), in which cases, energy is directed from the electrode **92** radially outward towards the electrodes **26**. In the illustrated embodiments, the operative electrode **92** has a tubular shape, but can have other shapes in alternative embodiments. The operative electrode **92** also has a sharp distal tip **94** for piercing tissue. The operative electrode **92** is secured to the distal end **14** of the cannula **12** such that the distal tip of the operative electrode **92** is distal to the distal end **14**. In other embodiments, the operative electrode **92** can be secured to the cannula **12** at a point along a length of the cannula **12**. In such case, the distal tip of the cannula **12** can have a sharp profile for piercing tissue.

[**0032**] In the illustrated embodiments, the array **30** of electrodes **26** and the operative electrode **92** are used to deliver RF current in a bipolar fashion, which means that current will pass between the array **30** of electrodes **26** and the operative electrode **92**. In a bipolar arrangement, the array **30** and the electrode **92** will be insulated from each other in any region(s) where they would or could be in contact with each other during a power delivery phase. If the cannula **12** is made from an electrically conductive material, an insulator **90** can be provided to electrically insulate the operative electrode **92** from the electrodes **26** in the array **30**. In other embodiments, the electrode array **30** can be electrically insulated from the operative electrode **92** by an insulator having other shapes or configurations that is placed at different locations in the probe assembly **4**. For example, in other embodiments, the probe assembly **4** can include insulators within the respective openings **80**. Alternatively, if the cannula **12** is made from a non-conductive material, the insulator **90** is not needed, and the ablation probe **4** does not include the insulator **90**.

[**0033**] Alternatively, the RF current is delivered to the electrode array **30** in a monopolar fashion, which means that current will pass from the electrode array **30**, which is configured to concentrate the energy flux in order to have an injurious effect on the surrounding tissue, to a dispersive electrode (not shown), which is located remotely from the electrode array **30** and has a sufficiently large area (typically 130 cm^2 for an adult), so that the current density is low and non-injurious to surrounding tissue. In such cases, the electrode assembly **4** does not include the operative electrode **92**. The dispersive electrode may be attached externally to the patient, e.g., using a contact pad placed on the patient's

Petitioner's Exhibit 1028
Avanos v. Stratus

flank. In other embodiments, the electrode assembly **4** can include the operative electrode **92** for delivering ablation energy in a monopolar configuration. In such cases, the array **30** of electrodes **26** and the operative electrode **92** are monopolar electrodes, and current will pass from the electrodes **26** and the electrode **92** to the dispersive electrode to thereby deliver ablation energy in a monopolar configuration.

[**0034**] Returning to FIGS. **2** and **3**, the probe assembly **4** further includes a handle assembly **27**, which includes a handle portion **28** mounted to the proximal end **24** of the shaft **20**, and a handle body **29** mounted to the proximal end **16** of the cannula **12**. The handle portion **28** is slidably engaged with the handle body **29** (and the cannula **20**). The handle portion **28** also includes two electrical connectors **38***a*, **38***b*, which allows the probe assembly **4** to be connected to the generator **6** during use. Particularly, the electrical connector **38***a* is electrically coupled to the electrodes **26**, and the electrical connector **38***b* is electrically coupled to the electrode **92**. The electrical connector **38***a* can be conveniently coupled to the electrodes **26** via the shaft **20** (which will be electrically conductive), although in other embodiments, the connector **38***a* can be coupled to the electrodes **26** via separate wires (not shown). The handle portion **28** and the handle body **29** can be composed of any suitable rigid material, such as, e.g., metal, plastic, or the like. In other embodiments, if the electrode assembly **4** does not include the electrode **92**, then the electrode assembly **4** does not include the connector **38***b*.

[**0035**] Optionally, a marker (not shown) may be placed on the handle portion **28** and/or on the proximal end **24** of the shaft **20** for indicating a rotational orientation or a position of the handle portion **28** relative to the shaft **20** (and the electrodes **26**) during use. In some embodiments, the handle assembly **27** can have an indexing feature. For example, the proximal end **24** of the shaft **20** or the handle portion **28** can have one or more keys that mate with respective slot(s) at the interior surface of the cannula **12** or the handle body **29**. Such indexing feature allows circumferential alignment of the shaft **20** (and the array **30**) relative to the cannula **12**. Angle indexing devices that may be used include those described in U.S. patent application Ser. No. 10/317,796, entitled "Angle Indexer For Medical Devices", the entire disclosure of which is expressly incorporated by reference herein. In other embodiments, the handle portion **28** may also include a locking mechanism (not shown) to temporarily lock against the shaft **20** to provide a more stable indexing. For example, the locking mechanism may include an axially-sliding clutch assembly that is slidable along an axis of the shaft **20** to thereby secure the handle portion **28** against the shaft **20**. Other securing devices known in the art may also be used.

[**0036**] Referring back to FIG. **1**, the RF generator **6** is electrically connected to the electrical connectors **38***a* **38***b*, which may be directly or indirectly (e.g., via a conductor) electrically coupled to the electrode array **30**. The RF generator **6** is a conventional RF power supply that operates at a frequency in the range from 200 KHz to 1.25 MHz, with a conventional sinusoidal or non-sinusoidal wave form. Such power supplies are available from many commercial suppliers, such as Valleylab, Aspen, and Bovie. Most general purpose electrosurgical power supplies, however, operate at higher voltages and powers than would normally be necessary or suitable for vessel occlusion. Thus, such power supplies would usually be operated at the lower ends of their voltage and power capabilities. More suitable power supplies will be capable of supplying an ablation current at a relatively low voltage, typically below 150V (peak-to-peak), usually being from 50V to 100V. The power will usually be from 20 W to 200 W, usually having a sine wave form, although other wave forms would also be acceptable. Power supplies capable of operating within these ranges are available from commercial vendors, such as Boston Scientific Corporation of San Jose, Calif., which markets these power supplies under the trademarks RF2000 (100 W) and RF3000 (200 W).

[**0037**] In alternative embodiments, instead of deploying the electrodes **26** by retracting the shaft **20** proximally relative to the cannula **12**, the electrodes **26** can be deployed by advancing the shaft **20** distally relative to the cannula **12**. FIG. **5** illustrates a variation of the probe assembly **4**, wherein the distal ends **66** of the electrodes **26** point at least partially towards a distal direction (e.g., with the distal ends **66** being distal to the proximal ends **67** of the electrodes **26**) when confined within the lumen **18** of the cannula. In such cases, the electrodes **26** can be deployed out of the lumen **18** of the cannula by advancing the shaft **20** distally relative to the cannula **12** (FIG. **6**). In the illustrated embodiments, each electrode **26** has a flared curvilinear profile that resembles a portion of a parabola and has a distal end that points at least partially towards a distal direction when deployed. In other embodiments, the electrodes **26** can have different deployed shapes/profiles, as similarly discussed previously.

[**0038**] In alternative embodiments, instead of pushing or pulling the handle portion **28** to advance the electrodes **26**, the handle assembly **27** can be configured such that the electrodes **26** can be deployed by rotating the handle portion **28** relative to the handle body **27**. For example, the shaft **20** can have a screw-like configuration, which allows the shaft **20** to be distally advanced or proximally retracted by rotation of the shaft **20**. In such case, the array **30** of electrodes **26** is rotatably coupled to the distal end **22** of the shaft **20** such that rotation of the shaft **20** does not rotate the electrodes **26**, but move them in an approximate longitudinal direction.

[**0039**] Referring now to FIGS. **7A-7D**, the operation of the tissue ablation system **2** is described in treating a treatment region TR within tissue T located beneath the skin or an organ surface S of a patient. The cannula **12** is first introduced within the treatment region TR, so that the distal end **14** of the cannula **12** is located at the target site TS, as shown in FIG. **7A**. This can be accomplished using any one of a variety of techniques. In some cases, the cannula **12** and shaft **20** may be introduced to the target site TS percutaneously directly through the patient's skin or through an open surgical incision. In this case, the cannula **12** (or the electrode **92**) may have a sharpened tip, e.g., in the form of a needle, to facilitate introduction to the target site TS. In such cases, it is desirable that the cannula **12** be sufficiently rigid, i.e., have a sufficient column strength, so that it can be accurately advanced through tissue T. In other cases, the cannula **12** may be introduced using an internal stylet that is subsequently exchanged for the shaft **20** and electrode array **30**. In this latter case, the cannula **12** can be relatively flexible, since the initial column strength will be provided by the stylet. More alternatively, a component or element may

be provided for introducing the cannula **12** to the target site TS. For example, a conventional sheath and sharpened obturator (stylet) assembly can be used to initially access the tissue T. The assembly can be positioned under ultrasonic or other conventional imaging, with the obturator/stylet then removed to leave an access lumen through the sheath. The cannula **12** and shaft **20** can then be introduced through the sheath lumen, so that the distal end **14** of the cannula **12** advances from the sheath to the target site TS.

[**0040**] After the cannula **12** is properly placed, the electrode array **30** is deployed out of the lumen **18** of the cannula **12**, as shown in FIG. **7**B. Particularly, the electrode array **30** is fully deployed to span at least a portion of the treatment region TR, as shown in FIG. **7**B. Alternatively, the needle electrodes **26** may be only partially deployed or deployed incrementally in stages during a procedure.

[**0041**] Next, the RF generator **6** is then connected to the probe assembly **4** via the electrical connectors **38***a* **38***b*, and the RF generator **6** is operated to deliver ablation energy to the needle electrodes **26** either in a monopolar mode or a bipolar mode. While ablation energy is being delivered, pressure can be applied to the handle assembly **27** (in the direction **400** shown), thereby causing the electrodes **26** to compress tissue that is being circumscribed by the deployed electrodes **26** (FIG. **7**C). The compression on the tissue reduces blood flow to the tissue, thereby preventing or reducing heat from being carried away by blood flow, which in turn, improves a tissue ablation rate. After a desired amount of ablation energy has been delivered, the treatment region TR is necrosed, thereby creating a lesion on the treatment region TR (FIG. **7**D).

[**0042**] In many cases, a single ablation may be sufficient to create a desired lesion. However, if it is desired to perform further ablation to increase the lesion size or to create lesions at different site(s) within the treatment region TR or elsewhere, the needle electrodes **26** may be introduced and deployed at different target site(s), and the same steps discussed previously may be repeated. When a desired lesion at treatment region TR has been created, the needle electrodes **26** are retracted into the lumen **18** of the cannula **12**, and the probe assembly **4** is removed from the treatment region TR.

[**0043**] Although particular embodiments of the present invention have been shown and described, it should be understood that the above discussion is not intended to limit the present invention to these embodiments. It will be obvious to those skilled in the art that various changes and modifications may be made without departing from the spirit and scope of the present invention. For example, the array **30** of electrodes **26** can be manufactured as a single component. As such, the "array of electrodes" should not be limited to a plurality of separate electrodes, and includes a single structure (e.g., an electrode) having different conductive portions. Thus, the present invention is intended to cover alternatives, modifications, and equivalents that may fall within the spirit and scope of the present invention as defined by the claims.

1. An ablation device, comprising:

a cannula having a distal end and a lumen;

an array of electrodes deployable from within the lumen, each of the electrodes having a first configuration when inside the lumen, and a second configuration when unconfined outside the lumen, the electrodes having respective distal ends that point at least partially towards a distal direction when deployed; and

an operative electrode secured to the distal end of the cannula, the operative electrode having a shape that is different from the array of electrodes.

2.-**38**. (canceled)

* * * * *

Petitioner's Exhibit 1028
Avanos v. Stratus