US007207258B1

(12) **United States Patent**
Scanlon

(10) **Patent No.: US 7,207,258 B1**
(45) **Date of Patent: Apr. 24, 2007**

(54) **WEAPON SILENCERS AND RELATED SYSTEMS**

(75) Inventor: **Michael V. Scanlon**, Laurel, MD (US)

(73) Assignee: **United States of America as represented by the Secretary of the Army**, Washington, DC (US)

(*) Notice: Subject to any disclaimer, the term of this patent is extended or adjusted under 35 U.S.C. 154(b) by 0 days.

(21) Appl. No.: **11/009,855**

(22) Filed: **Dec. 10, 2004**

(51) **Int. Cl.**
F41A 21/00 (2006.01)

(52) **U.S. Cl.** **89/198**; 89/14.4; 181/223

(58) **Field of Classification Search** 89/14.3, 89/14.4; 181/212, 247, 249
See application file for complete search history.

(56) **References Cited**

U.S. PATENT DOCUMENTS

2,916,970	A	*	12/1959	Mutter	89/14.3
4,222,456	A		9/1980	Kasper	181/296
4,291,610	A		9/1981	Waiser	89/14
4,315,560	A		2/1982	Stauch et al.	181/275
4,335,644	A		6/1982	Goes et al.	89/198
4,576,083	A		3/1986	Seberger, Jr.	89/14.4
4,584,924	A		4/1986	Taguchi	89/14.4
4,588,043	A		5/1986	Finn	181/223
4,685,534	A		8/1987	Burstein et al.	181/251
4,974,489	A		12/1990	Fishbaugh	89/14.4
5,164,535	A		11/1992	Leasure	89/14.4
5,311,907	A		5/1994	Houck	137/810
5,315,914	A		5/1994	Schumacher	89/14.05
5,679,916	A		10/1997	Weichert	89/14.4

FOREIGN PATENT DOCUMENTS

FR	0866587	*	8/1941	89/14.4

* cited by examiner

Primary Examiner—Michael J. Carone
Assistant Examiner—Gabriel J. Klein
(74) *Attorney, Agent, or Firm*—William V. Adams

(57) **ABSTRACT**

Silencers are provided for a weapon having a combustion chamber and a barrel. The weapon is configured to launch a projectile with combustion gases generated in the combustion chamber. An exemplary silencer includes a proximal end and a distal end, the proximal end being configured for mounting the silencer to the barrel, the distal end being configured to allow the projectile to pass therethrough, and at least one vortex chamber disposed between the proximal end and the distal end. The at least one vortex chamber includes a circular peripheral wall for inducing a vortex on a portion of the combustion gases expelled from the combustion chamber during launch of the projectile. The vortex impedes flow of the combustion gases from the barrel such that acoustic energy associated with the launch of the projectile is dissipated.

5 Claims, 6 Drawing Sheets

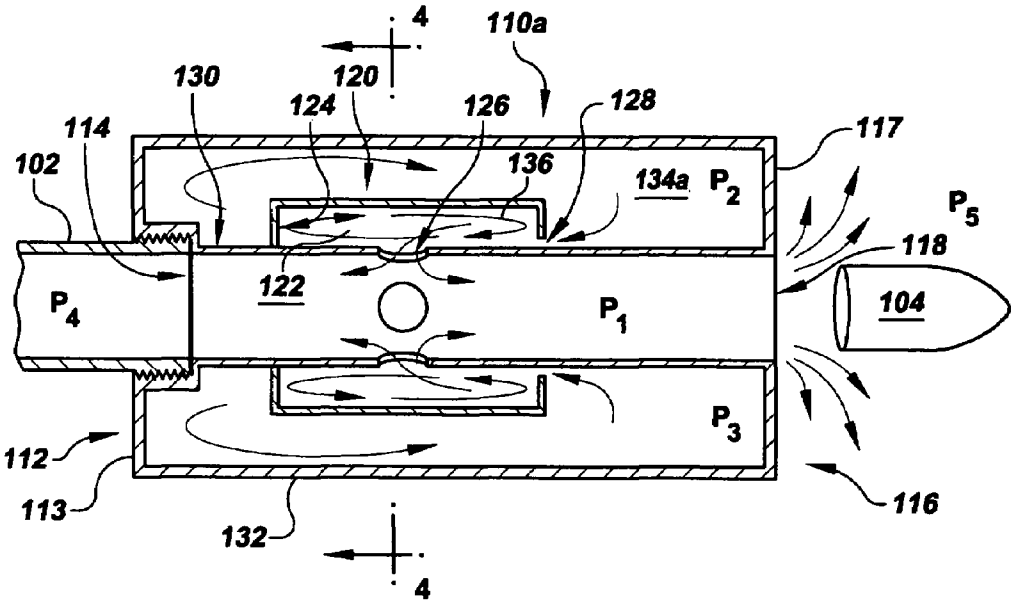

SilencerCo - EX1007 - U.S. Patent No. 8,286,750

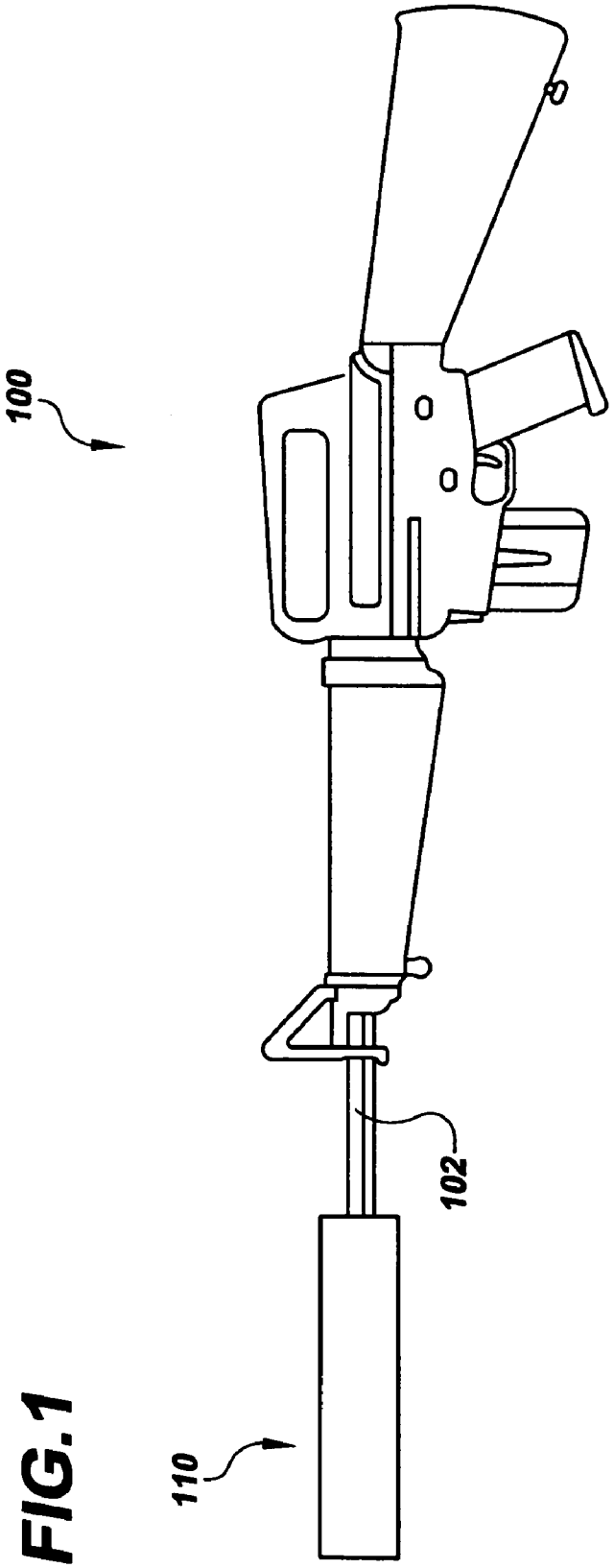

FIG.1

FIG.2A

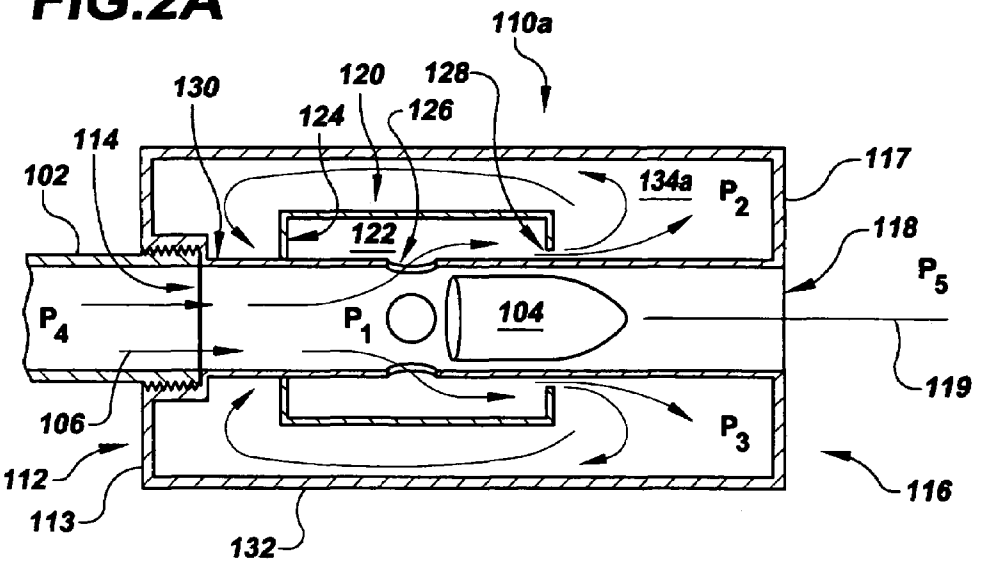
110a
130
120
128
124
126
114
102
117
134a
P2
122
118
P5
P4
P1
104
119
106
P3
112
116
113
132

FIG.2B

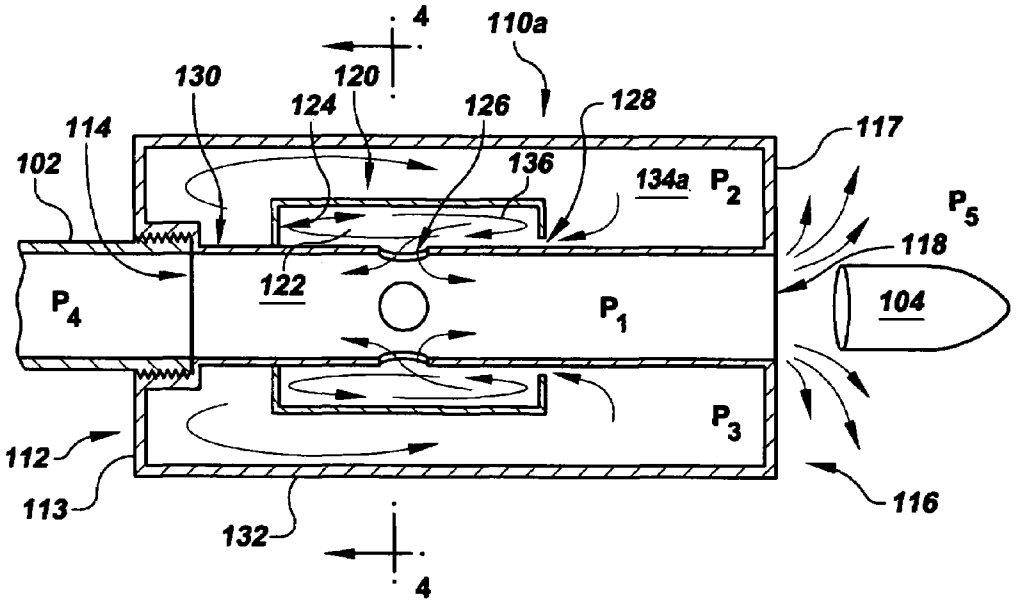
4
110a
130
120
124
126
128
114
117
102
136
134a
P2
P5
118
122
104
P4
P1
P3
112
113
116
132
4

FIG.3A

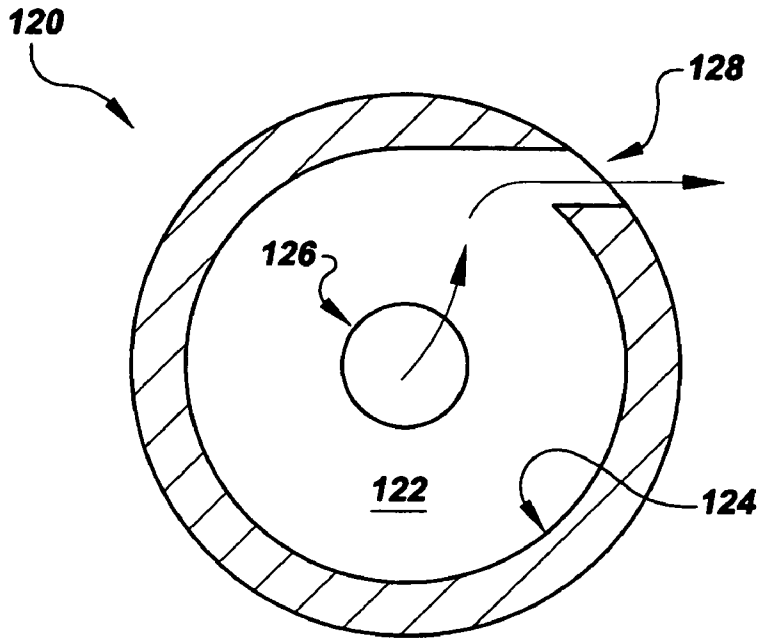

FIG.3B

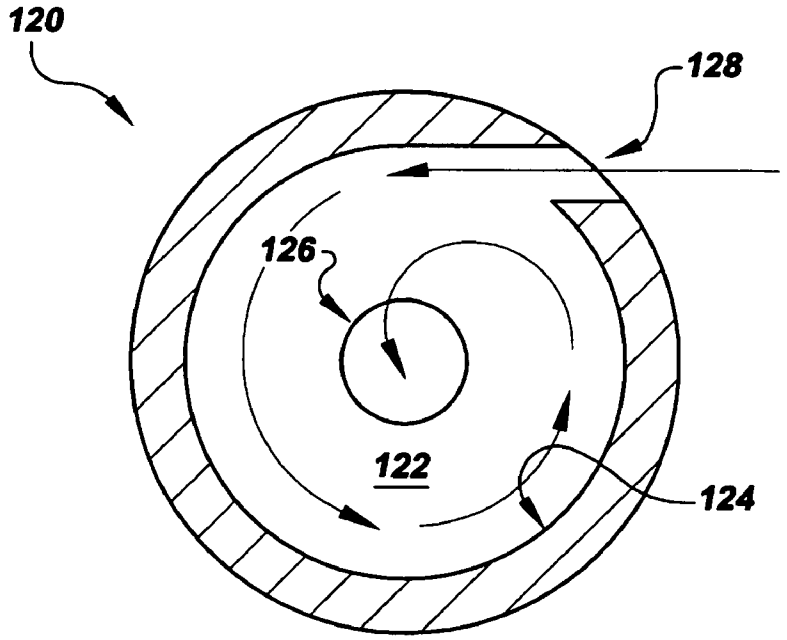

FIG.4

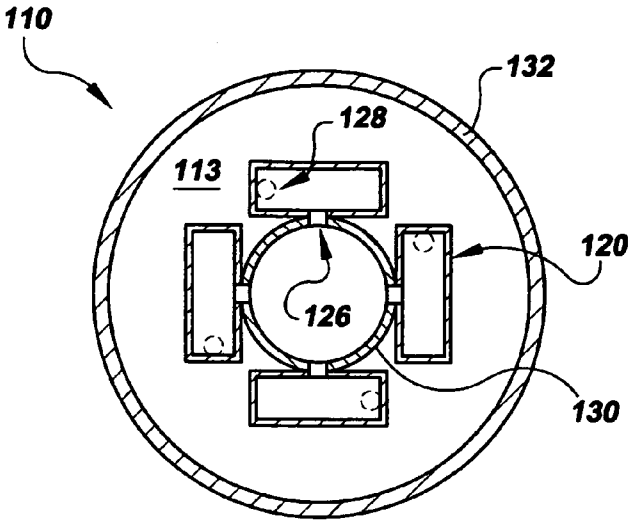
110
132
128
113
120
126
130

FIG.5

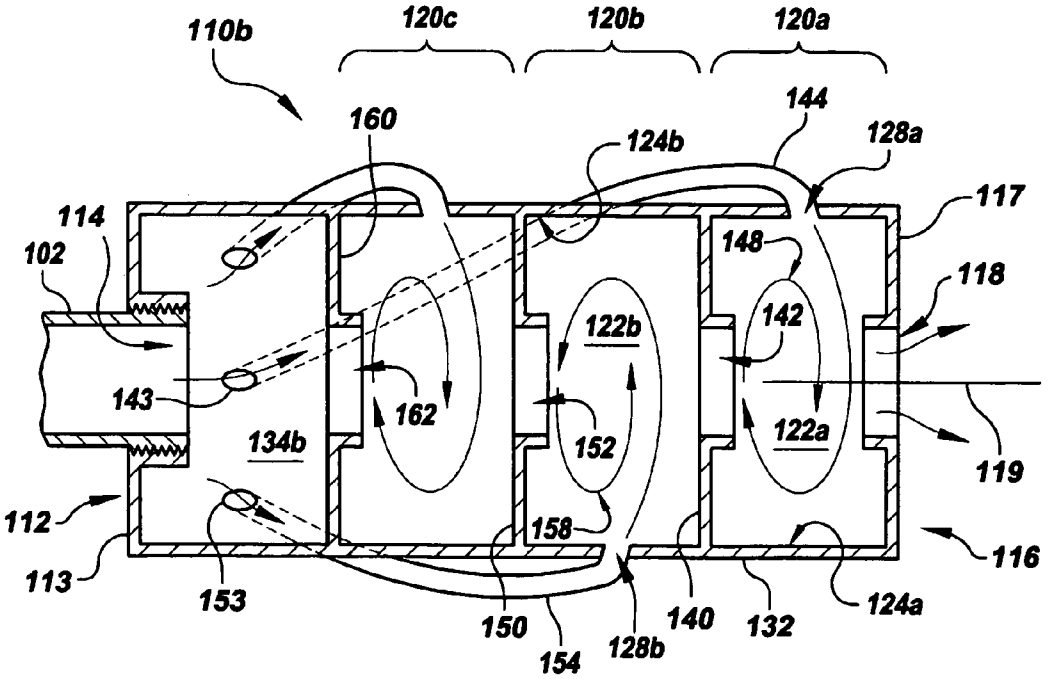
110b
120c
120b
120a
160
124b
144
128a
117
114
102
148
118
142
122b
143
162
152
122a
134b
119
112
158
116
113
153
150
154
128b
140
132
124a

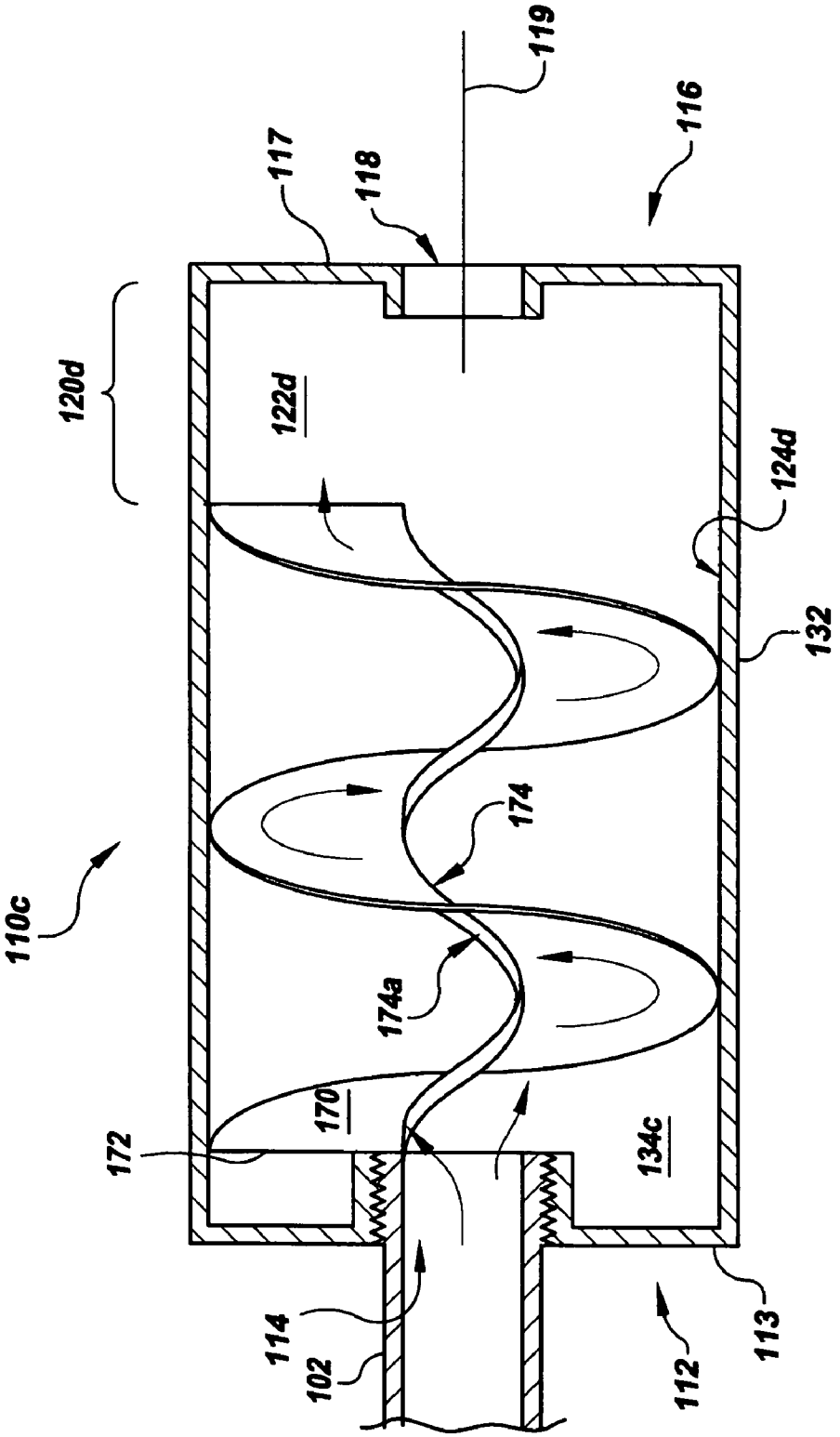
119
116
117
118
120d
122d
124d
132
174
110c
174a
170
172
134c
114
102
112
113

FIG.6

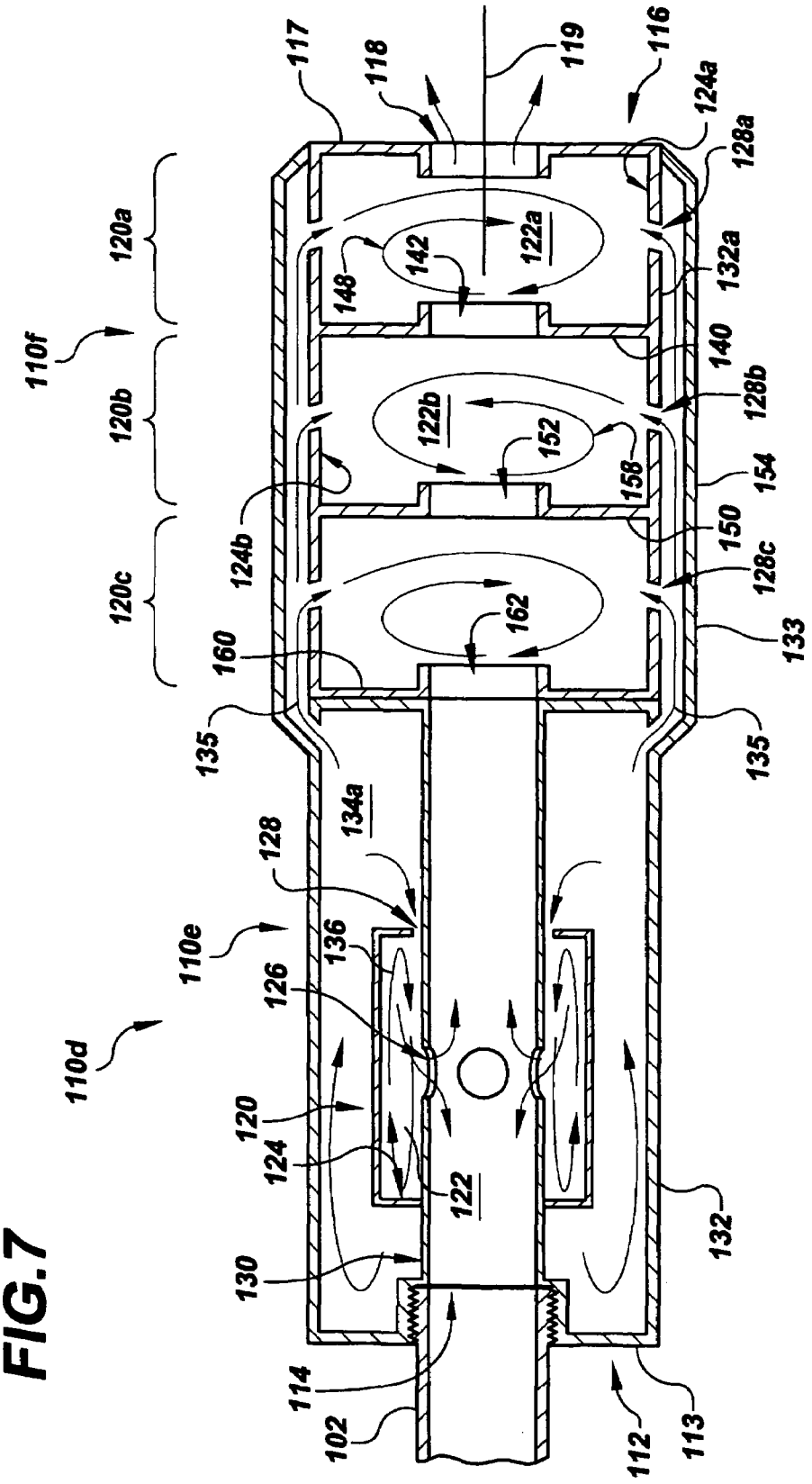
110f
110e
110d
120a
120b
120c
117
118
119
116
124a
128a
132a
140
128b
154
150
128c
133
135
135
122a
142
148
122b
152
158
124b
160
162
134a
128
136
126
120
124
122
130
114
102
112
113
132

FIG.7

WEAPON SILENCERS AND RELATED SYSTEMS

GOVERNMENT INTEREST

The invention described herein may be manufactured, used, and licensed by or for the United States Government.

BACKGROUND

1. Technical Field

The present disclosure generally relates to silencers for weapons having combustion chambers.

2. Description of the Related Art

Many known weapons utilize expanding high-pressure combustion gases to expel a projectile from the weapon. For example, to "fire" a bullet from a firearm, gun powder is ignited behind the bullet. Ignition of the gun powder creates a high-pressure pulse of combustion gases that forces the bullet down the barrel of the firearm. When the bullet exits the end of the barrel, the high-pressure pulse of combustion gases exits the barrel as well. The rapid pressurization and subsequent depressurization caused by this high-pressure pulse creates a loud sound known as "muzzle blast." As would be expected, the muzzle blast can indicate to an observer the direction from which a weapon is being fired. There are those occasions, such as during law enforcement operations or military operations, when it is desirable to conceal the location from which a weapon is fired. In those instances, it is often desirable to reduce the amplitude of the muzzle blast.

The use of silencers with weapons to reduce the amplitude of muzzle blasts is known. A typical silencer is located on the end of the barrel and provides a large expansion volume compared to the barrel, typically 20 to 30 times greater. With the silencer in place, the pressurized combustion gases behind the projectile have a relatively large volume into which to expand. As the combustion gases expand into the volume of the silencer, the pressure of those gases falls significantly. Therefore, as the projectile finally exits the silencer, the pressure of the combustion gases being released to the atmosphere is significantly lower than the pressure of the combustion gases when a silencer is not used. By reducing the peak amplitude of the combustion gas pressure released to the atmosphere, the sound of the weapon being fired is much softer.

Many existing silencers are typically of complex construction. For example, many silencers have moving parts and tight variances that may become fouled by residue deposited as combustion gases pass through the silencer. Fouling of these parts and variances during the repeated firing of the weapon may cause reduced efficiency and/or total inoperability of the silencer. Many existing silencers also require the use of baffling materials for the reduction of the muzzle blast of the weapon. Often, these baffling materials must be replaced frequently during repetitive firing to maintain the effectiveness of the silencer.

SUMMARY

Briefly described, devices and systems involving a silencer for use with a weapon are disclosed. A representative embodiment of a silencer is provided for a weapon that has a combustion chamber and a barrel. The weapon is configured to emit a projectile with combustion gases. The silencer also includes a proximal end and a distal end, the proximal end being configured for mounting the silencer to the barrel, the distal end being configured to allow the projectile to pass therethrough. The silencer includes at least one vortex chamber disposed between the proximal end and the distal end, the at least one vortex chamber including a circular peripheral wall for inducing a vortex on a portion of the combustion gases during emission of the projectile.

Another embodiment provides a weapon for emitting a projectile with combustion gases. The weapon includes a combustion chamber, a barrel for guiding the projectile along a flight path, and a silencer. The silencer includes a proximal end and a distal end, the proximal end being configured for mounting the silencer to the barrel, the distal end being configured to allow the projectile to pass therethrough, and at least one vortex chamber disposed between the proximal end and the distal end. The at least one vortex chamber includes a circular peripheral wall for inducing a vortex on a portion of the combustion gases during emission of the projectile.

Other systems, methods, features and/or advantages will be or may become apparent to one with skill in the art upon examination of the following drawings and detailed description. It is intended that all such additional systems, methods, features and/or advantages be included within this description and be protected by the accompanying claims.

BRIEF DESCRIPTION OF THE DRAWINGS

The components in the drawings are not necessarily to scale. Moreover, in the drawings, like reference numerals designate corresponding parts throughout the several views.

FIG. **1** is a side view of an embodiment of a weapon that includes an embodiment of a silencer.

FIGS. **2**A and **2**B are cut-away side views of an embodiment of a silencer.

FIGS. **3**A and **3**B are schematic illustrations of an embodiment of a vortex chamber showing internal fluid flow.

FIG. **4** is a cross-sectional view of the silencer as shown in FIGS. **2**A and **2**B, along line **4**—**4** of FIG. **2**B.

FIG. **5** is a cut-away side view of another embodiment of a silencer.

FIG. **6** is a cut-away side view of another embodiment of a silencer.

FIG. **7** is a cut-away side view of another embodiment of a silencer.

DETAILED DESCRIPTION

Embodiments of silencers for reducing the muzzle blast of a weapon are discussed. FIG. **1** depicts an exemplary embodiment of a silencer as would be disposed on a weapon. FIGS. **2**A–**2**B and **4** depict an exemplary embodiment of a silencer of the disclosure. The principles of operation of an embodiment of a vortex diode are depicted in FIGS. **3**A–**3**B. The remaining figures depict other exemplary embodiments of silencers.

Referring now to FIG. **1**, an embodiment of a weapon **100** is depicted to which an embodiment of a silencer **110** is attached. Specifically, the silencer **110** is attached to the barrel **102** of the weapon **100**. Although the weapon **100** is a rifle-type firearm, embodiments of silencers may be used with other types of weapons, such as hand guns.

FIGS. **2**A and **2**B depict another embodiment of a silencer. As shown, the silencer **110***a* includes a proximal end **112** including an entry opening **114**, and a distal end **116** including a discharge opening **118**. Preferably, the proximal end **112** is configured to be removably attached to the end of

the barrel of a weapon, such as barrel **102** of FIG. **1**. By way of example, matching threads are preferably used. The longitudinal axis of the barrel **102** and the silencer **110***a* form a single longitudinal axis, or projectile path **119**. Preferably, an inner cylindrical wall **130** extends from the entry opening **114** to the discharge opening **118** about the projectile path **119**. An outer housing **132** is disposed about the inner cylindrical wall **130**, thereby forming an expansion chamber **134***a*. Preferably, although not necessarily, the proximal end **112** and distal end **116** of the silencer **110***a* are formed by a first wall **113** and a second wall **117**, respectively, that are substantially parallel. As such, the first wall **113**, the second wall **117**, the inner cylindrical wall **130**, and the outer housing **132** form a cylindrical expansion chamber **134***a*. Preferably, materials used in constructing the silencer have desirable heat conduction/absorption properties to help remove energy from the expanding combustion gases.

Preferably, the silencer **110***a* includes a plurality of vortex diodes **120** disposed on the inner cylindrical wall **130** (FIG. **4**). Each vortex diode **120** includes a circular peripheral wall **124** defining a substantially cylindrical vortex chamber **122**, a vent **126**, and a nozzle **128** formed in the circular peripheral wall **124**.

As shown in FIG. **3**A, the circular peripheral wall **124** is disposed about the vent **126** and the nozzle **128** is formed tangential to the circular peripheral wall **124**. Embodiments are envisioned wherein multiple nozzles **128** are positioned at various points around the circular peripheral wall **124**, each providing a tangential input to the chamber. As such, combustion gases, flowing in the direction of the flow arrows, enter the vortex diode **120** through the vent **126** and pass through the vortex chamber **122** directly out the nozzle **128**. Fluid flow in this direction is restricted only by the cross sections of the vent **126** and nozzle **128**.

In contrast, combustion gasses flowing in the direction of the flow arrows shown in FIG. **3**B first pass through the nozzle **128**, thereby entering the vortex chamber **122** tangentially to the circular peripheral wall **124**. As such, the fluid is forced to spiral, creating a vortex prior to exiting through the vent **126**. As is evident from FIG. **3**B, the circular shape of the vortex chamber **122** provides an angular acceleration to the tangentially flowing fluid. The resultant angular velocity of the fluid causes the formation of the vortex within the vortex chamber **122**, thereby restricting the exit flow of the fluid through the vent **126**.

As shown in FIG. **2**A, one or more vortex diodes **120** are disposed within the silencer **110***a* such that the vortex chamber **122** is in fluid communication with the projectile path **119** by way of the vent **126** and the expansion chamber **134***a* by way of the nozzle **128**. Therefore, during the firing of a projectile **104** from a weapon **100**, combustion gases will be allowed to freely expand into the expansion chamber **134***a* by flowing through the vent **126**, through the vortex chamber **122**, and out the nozzle **128**, as previously discussed with regard to FIG. **3**A. For example, as shown in FIG. **2**A, as the projectile **104** is urged along the projectile path **119** by the expanding combustion gases **106**, the projectile **104** will eventually reach a location within the silencer **110***a* where the combustion gases **106** are allowed to pass through the vortex diodes **120** with minimal resistance and into the expansion chamber **134***a*.

To facilitate the flow of gases into the expansion chamber **134***a*, a pressure bleed port or ports (not shown) can be positioned toward the distal end **116**, thereby removing any "block-loaded" pressure condition and reducing the input impedance of gases into the chamber **134***a*. An exemplary port could be a simple hole or could also be a vortex diode that will change resistance significantly when the chamber begins to become pressurized. The port would also facilitate the purging of water from the silencer **100***a* after submersion or cleaning. Another possible location for such a pressure bleed port could be between adjacent chambers **134***a*, should there be more than one, with the fluid communication path eventually leading to the discharge part **118**.

Once the combustion gases **106** have passed into the expansion chamber **134***a*, the pressures within the weapon **102** and the silencer **110***a* represented by P**1**, P**2**, P**3**, and P**4** are substantially equal and greater than the ambient pressure represented by P**5**. Note however, although greater than ambient pressure P**5**, those pressures represented by P**1** through P**4** are substantially less than the pressure exhibited by combustion gases leaving the barrel **102** of a weapon **100** when the silencer **110***a* is not used.

As shown in FIG. **2**B, as the projectile **104** leaves the silencer **110***a* and the pressures P**1** and P**4** approach ambient pressure P**5**, pressures P**2** and P**3** are now greater than pressures P**1** and P**4**. As such, the higher pressure combustion gases present in the expansion chamber **134***a* will flow to the lower pressure region represented by pressures P**1** and P**4** by flowing through the vortex diodes **120**. Each vortex diode **120** now slows the depressurization of the expansion chamber **134***a* by inducing a vortex, represented by flow arrows **136**, on the combustion gases as they flow first through the nozzle **128**, tangentially about the vortex chamber **122**, and eventually to the atmosphere through the vent **126** and then the discharge opening **118**. As such, each vortex diode **120** not only aids in reducing the peak pressure of the combustion gases released to atmosphere, but also delays the depressurization of the expansion chamber **134***a*, thereby reducing the muzzle blast of the weapon being discharged. Additional versions of vortex diodes and chamber combinations can be placed within the same silencer for successive pressure drops.

FIG. **5** depicts another embodiment of a silencer **110***b*. Preferably, the silencer **110***b* includes a proximal end **112** and a distal end **116**. The proximal end is formed by a first wall **113** including an entry opening **114**, and the distal end is formed by a second wall **117** including a discharge opening **118**. The entry opening **114** and discharge opening **118** are both disposed about the projectile path **119**. A cylindrical outer housing **132** extends from the first wall **113** to the second wall **117** about the projectile path **119**, such that the silencer **110***b* forms a preferably cylindrical volume. As shown, the silencer **110***b* includes a first vortex diode **120***a*, a second vortex diode **120***b*, and a third vortex diode **120***c*. Note, embodiments of the silencer **110***b* are envisioned that include as few as one vortex diode **120**, as well as numbers of vortex diodes **120** greater than that shown. For ease of description, only the operation of first vortex diode **120***a* and second vortex diode **120***b* will be discussed.

As shown, the first vortex diode **120***a* includes a vortex chamber **122***a* formed by the second wall **117**, a first partition **140**, and a circular peripheral wall **124***a*. The circular peripheral wall **124***a* is preferably the inner surface of the outer housing **132**. The first vortex diode **120***a* also includes a nozzle **128***a* configured to introduce combustion gases tangentially to the circular peripheral wall **124***a*, and a vent, the function of which is performed by the discharge opening **118** of the second wall **117**. Similarly, the second vortex diode **120***b* is formed between the first partition **140** and a second partition **150**, and includes a circular peripheral wall **124***b* and a nozzle **128***b* for introducing combustion gases tangential to the circular peripheral wall **124***b*. Note,

the dimensions of the various vortex chambers do not need to be uniform with respect to other vortex chambers within the same silencer.

A first projectile aperture **142** formed in the first partition **140** functions as the vent for the second vortex diode **120***b*. A third vortex diode **120***c* is similarly formed between a third partition **160** and the second partition **150**. The first projectile aperture **142**, the second projectile aperture **152**, and a third projectile aperture **162** formed in the third partition **160** are all disposed along and about the projectile path **119**. The inside diameters of projectile apertures **142**, **152**, and **162** exceed the projectile's outside diameter to ensure the projectile travels through the apertures without contact, but with minimal clearance to improve the effectiveness of the silencer

As shown, the proximal end **112** of the silencer **110***b* includes an expansion chamber **134***b* formed between the third partition **160**, the first wall **113**, and a portion of the outer housing **132**. As shown, the expansion chamber **134***b* is a cylindrical volume, although this is not necessary for all embodiments. Preferably, a first fluid conduit **144** extends from an inlet **143** in the outer wall of the expansion chamber **134***b* to the nozzle **128***a* of the first vortex diode **120***a*. Note, the first fluid conduit **144** does not need to be outside the silencer **110***b*, as shown. Rather, the fluid conduit **144** could be fashioned to conduct flows internal to the outer housing **132** in voids created by walls **124***a,b,c* (not shown). Similarly, a second conduit **154** extends from an inlet **153** formed in the outer wall of the expansion chamber **134***b* to the nozzle **128***b* of the second vortex diode **120***b*. The first and second conduits **144**, **154** allow combustion gases, as indicated by the flow arrows, to flow from the expansion chamber **134***b* to their respective vortex diodes **120***a*, **120***b*.

After the weapon has been fired, the projectile (not shown) will eventually reach the vicinity of the third projectile aperture **162**. At this point, the combustion gases that have propelled the projectile out of the barrel **102** pass into the expansion chamber **134***b* where at least a portion of the combustion gases exit through first and second inlets **143**, **153** and travel down the first and second conduits **144**, **154** into the first and second vortex diodes **120***a*, **120***b*, respectively. The combustion gases that reach the first vortex diode **120***a* are introduced to the vortex chamber **122***a* tangentially to the circular peripheral wall **124***a*. As such, a first vortex **148** is induced, thereby delaying the escape of the combustion gases from the silencer **110***b* by way of the discharge opening **118**. Similarly, the combustion gases that reach the second vortex chamber **122***b* are introduced tangentially to the circular peripheral wall **124***b* through nozzle **128***b*, thereby forming a second vortex **158**. Thus, the escape of the combustion gases through the first projectile aperture **142**, and ultimately to the atmosphere, is delayed. Note, embodiments of the silencer **110***b* are envisioned wherein the conduits pass through the various partitions to their respective vortex diodes rather than being external to the outer housing **132**. Additional internal helical baffles (not shown) can optionally be added to the proximal and distal ends of each vortex chamber to initiate swirl to the expanding gases prior to any additional circulation being induced by the nozzles. These baffles could be configured similar to turbine blade shapes that redirect the expanding fluids in the same direction of the induced swirl of the vortex diode.

Another embodiment of a silencer **110***c* is depicted in FIG. **6**. As shown, the silencer **110***c* includes a proximal end **112** and a distal end **116**, the proximal end being formed by a first wall **113** including an entry opening **114**, and the distal end being formed by a second wall **117** including a discharge opening **118**. A cylindrical outer housing **132** extends from the first wall **113** to the second wall **117**, thereby forming a cylindrical expansion chamber. The entry opening **114**, the discharge opening **118**, and the outer housing **132** are disposed about the projectile path **119**. As shown, the silencer **110***c* also includes a helically-shaped baffle **170** extending from the proximal end **112** for a portion of the length of the silencer **110***c*. The helically-shaped baffle **170** contacts the first wall **113**. However, the helically-shaped baffle **170** can be spaced from the first wall **113** in other embodiments. Preferably, the induced swirl of the combustion gases caused by the baffle should be in the same direction as the rifling of the weapon to reduce potential de-stabilizing effects of the gases on the projectile. However, this is not necessary.

The silencer **110***c* functions under the vortex diode flow principles previously described to reduce the amplitude of the sound of firing a weapon. In the embodiment shown, a vortex diode **120***d* includes a vortex chamber **122***d* formed by the cylindrical volume of the silencer **110***c*, a circular peripheral wall **124***d* formed by the inner surface of the outer housing **132**, and a vent as formed by the discharge opening **118**. The function of a nozzle is performed by the helically-shaped baffle **170**. As a projectile exits the barrel **102** of the weapon, the combustion gases enter the vortex chamber **122***d* of the vortex diode **120***d*, where they encounter the helically-shaped baffle **170**. Preferably, the helically-shaped baffle **170** includes an outer edge **172** that is in contact with the circular peripheral wall **124***d* and an inner edge **174** which is adjacent the projectile path **119**.

Preferably, the inner edge **174** has an edge extension **174***a* that extends slightly in the direction toward the proximal end **112**, whereby the edge extension **174***a* helps capture the expanding gases and force containment and circulation outward along the helical baffle **170**. As the combustion gases encounter the helically-shaped baffle **170**, an angular acceleration is imparted on the combustion gases, causing the gases to flow outwardly toward the circular peripheral wall **124***d*. As such, as the combustion gases travel the length of the vortex chamber **122***d*, a vortex is induced, as shown by the flow arrows. Therefore, the helically-shaped baffle **170** has performed the function of a nozzle **128** (FIGS. **3**A–**3**B) by inducing a vortex on the combustion gases. Similar to the prior discussions, the induced vortex will contain the gases within the chamber **122***d* due to outwardly expanding circular swirl and delay the escape of the expanding combustion gases to atmosphere, thereby reducing the sound of the weapon being fired.

FIG. **7** depicts another embodiment of a silencer **110***d*. As shown, the silencer **110***d* includes a proximal end **112** including an entry opening **114**, and a distal end **116** including a discharge opening **118**. Preferably, the proximal end **112** is configured to be removably attached to the end of the barrel of a weapon, such as barrel **102**. By way of example, matching threads are preferably used. The longitudinal axis of the barrel **102** and the silencer **110***d* form a single longitudinal axis, or projectile path **119**. As shown, the silencer **110***d* includes a first stage **110***e* that functions similarly to the silencer **110***a* shown in FIGS. **2**A–**2**B and **4**, and a second stage **110***f* that functions similarly to the silencer **110***b* shown in FIG. **5**. Note, however, that in the embodiment shown in FIG. **7**, expansion chamber **134***b* has been replaced with the first stage **110***e*.

Preferably, an inner cylindrical wall **130** of the first stage **110***e* extends from the entry opening **114** to a third projectile aperture **162** formed in a third partition **160** of the second

stage **110***f*. An outer housing **132***a* is disposed about the inner cylindrical wall **130**, thereby forming an expansion chamber **134***a*.

Preferably, the first stage **110***e* includes a plurality of vortex diodes **120** disposed on the inner cylindrical wall **130** (FIG. **4**). Each vortex diode **120** includes a circular peripheral wall **124** defining a substantially cylindrical vortex chamber **122**, a vent **126**, and a nozzle **128** formed in the circular peripheral wall **124**. Embodiments are envisioned wherein multiple nozzles **128** are positioned at various points around the circular peripheral wall **124**, each providing a tangential input to the chamber.

Preferably one or more vortex diodes **120** are disposed within the first stage **110***e* such that the vortex chamber **122** is in fluid communication with the projectile path **119** by way of the vent **126** and the expansion chamber **134***a* by way of the nozzle **128**. Therefore, during the firing of a projectile from a weapon, combustion gases will be allowed to freely expand into the expansion chamber **134***a* by flowing through the vent **126**, through the vortex chamber **122**, and out the nozzle **128**, as previously discussed with regard to FIG. **3**A. As the projectile is urged along the projectile path **119** by the expanding combustion gases **106**, the projectile will eventually reach a point within the first stage **110***e* where the combustion gases **106** are allowed to pass through the vortex diodes **120** with minimal resistance and into the expansion chamber **134***a*.

Preferably, the second stage **110***f* of the silencer **110***d* includes a cylindrical outer housing **132** extending from the third partition **160** to the second wall **117**, a first axially-disposed vortex diode **120***a*, a second axially-disposed vortex diode **120***b*, and a third axially-disposed vortex diode **120***c*. Note, embodiments of the silencer **110***d* are envisioned that include as few as one axially-disposed vortex diode **120***a–c*, as well as numbers of vortex axially-disposed diodes **120***a–c* greater than that shown. For ease of description, only the operation of first axially-disposed vortex diode **120***a* and second vortex diode **120***b* will be discussed.

As shown, the first axially-disposed vortex diode **120***a* includes a vortex chamber **122***a* formed by the second wall **117**, a first partition **140** and a circular peripheral wall **124***a*. Preferably, the circular peripheral wall **124***a* is the inner surface of the outer housing **132**. The first vortex diode **120***a* also includes at least one nozzle **128***a* configured to introduce combustion gases tangentially to the circular peripheral wall **124***a*, and a vent, the function of which is performed by the discharge opening **118** of the second wall **117**. Similarly, the second vortex diode **120***b* is formed between the first partition **140** and a second partition **150**, and includes a circular peripheral wall **124***b* and at least one nozzle **128***b* for introducing combustion gases tangential to the circular peripheral wall **124***b*. Note, the dimensions of the various vortex chambers do not need to be uniform with respect to other vortex chambers within the same silencer.

A first projectile aperture **142** formed in the first partition **140** functions as the vent for the second vortex diode **120***b*. A third vortex diode **120***c* is similarly formed between a third partition **160** and the second partition **150**. The first projectile aperture **142**, the second projectile aperture **152**, and a third projectile aperture **162** formed in the third partition **160** are all disposed along and about the projectile path **119**. The inside diameters of projectile apertures **142**, **152**, and **162** exceed the projectile's outside diameter to ensure the projectile travels through the apertures without contact, but with minimal clearance to improve the effectiveness of the silencer **10***b*.

Control ports **135** bleed a portion of high pressure air from the expansion chamber **134***a* to a volume formed between the outer housing **132***a* and a second housing **133**. As indicated by the flow arrows, combustion gases are allowed to flow from the expansion chamber **134***a* to the axially-disposed vortex diodes **120***a–c* by way of the volume and the nozzles **128***a–c*.

The combustion gases that reach the first vortex diode **120***a* are introduced to the vortex chamber **122***a* tangentially to the circular peripheral wall **124***a*. As discussed in regard to FIG. **3**B, a first vortex **148** is induced, thereby delaying the escape of the combustion gases from the silencer **110***d* by way of the discharge opening **118**. Similarly, the combustion gases that reach the second vortex chamber **122***b* are introduced tangentially to the circular peripheral wall **124***b* through nozzle **128***b*, thereby forming a second vortex **158**. The escape of the combustion gases through the first projectile aperture **142**, and ultimately to the atmosphere, is delayed.

As the projectile **104** leaves the silencer **110***d* the higher pressure combustion gases remaining in the expansion chamber **134***a* will flow to the lower pressure region along the flight path by flowing through the vortex diodes **120** of the first stage **110***e*. Each vortex diode **120** now slows the depressurization of the expansion chamber **134***a* by inducing a vortex, represented by flow arrows **136**, on the combustion gases as they flow first through the nozzle **128**, tangentially about the vortex chamber **122**, and eventually to the atmosphere through the vent **126** and then the discharge opening **118**. As such, each vortex diode **120** not only aids in reducing the peak pressure of the combustion gases released to atmosphere, but also delays the depressurization of the expansion chamber **134***a*, thereby reducing the muzzle blast of the weapon being discharged.

Note, although the silencers that have been disclosed are for use in reducing the muzzle blast of a weapon, similar devices operating on similar principles can be used to quiet exhausting of high pressure fluids (gases, liquids, gas/liquid combinations, etc.) in industrial equipment, engines, vehicle mufflers, and other manufacturing equipment.

The foregoing description has been presented for purposes of illustration and description. It is not intended to be exhaustive or to limit the present disclosure to the precise forms disclosed. Modifications and/or variations are possible in light of the above teachings. The embodiments discussed, however, were chosen and described to illustrate the principles of the present disclosure and its practical application to thereby enable one of ordinary skill in the art to utilize the present disclosure and various embodiments and with various modifications as are suited to the particular use contemplated. All such modifications and/or variations are within the scope of the present disclosure as determined by the appended claims when interpreted in accordance with the breadth to which they are fairly and legally entitled.

What is claimed is:

1. A silencer for a weapon having a combustion chamber and a barrel, the weapon being configured to launch a projectile with combustion gases generated in the combustion chamber, the silencer comprising:

a proximal end and a distal end, the proximal end being configured for mounting the silencer to the barrel and including an entry opening, the distal end including a discharge opening configured to allow the projectile to pass therethrough, the entry opening and discharge opening being concentric about a longitudinal axis of the barrel and defining a projectile path therebetween;

an inner cylindrical wall disposed about the projectile path;

an outer housing disposed concentrically about the inner cylindrical wall;

an expansion chamber formed by the inner cylindrical wall, the outer housing, the proximal end and the distal end of the silencer; and

at least one vortex chamber disposed between the proximal end and the distal end, the at least one vortex chamber including:

a vent disposed on the inner cylindrical wall;

a circular peripheral wall being disposed concentrically about the vent;

a nozzle disposed on the circular peripheral wall; and

wherein the circular peripheral wall is operative to induce a vortex on at least a portion of the combustion gases expelled from the combustion chamber during launch of the projectile, the vortex impeding flow of the combustion gases from the barrel such that the acoustic energy associated with the launch of the projectile is dissipated.

2. A silencer for a weapon having a combustion chamber and a barrel, the weapon being configured to a projectile with combustion gases generated in the combustion chamber, the silencer comprising:

a proximal end and a distal end, the proximal end being configured for mounting the silencer to the barrel, the distal end being configured to allow the projectile to pass therethrough;

an entry opening disposed on the proximal end of the silencer;

a discharge opening disposed on the distal end of the silencer wherein the entry opening and discharge opening are located along a longitudinal axis of the barrel and define a projectile path therebetween;

an inner cylindrical wall disposed about the projectile path;

an outer housing disposed about the inner cylindrical wall;

an expansion chamber formed by the inner cylindrical wall, the outer housings, the proximal end and the distal end of the silencer;

at least one vortex chamber disposed between the proximal end and the distal end, the at least one vortex chamber including a circular peripheral wall for inducing a vortex on at least a portion of the combustion gases expelled from the combustion chamber during launch of the projectile, the vortex impeding flow of the combustion gases from the barrel such that acoustic energy associated with the launch of the projectile is dissipated;

wherein the at least one vortex chamber further comprises a first vortex chamber, in fluid communication with both the projectile path and the expansion chamber;

further comprising a vent disposed on the inner cylindrical wall, the circular peripheral wall being disposed concentrically about the vent, the vent being configured to allow combustion gases to flow between the vortex chamber and the projectile path, and a nozzle disposed on the circular peripheral wall, wherein the nozzle is configured to introduce a first portion of the combustion gases into the first vortex chamber tangentially to the circular peripheral wall.

3. The silencer of claim **2**, wherein a central longitudinal axis of the first vortex chamber is perpendicular to the projectile path.

4. A weapon for launching a projectile with combustion gases, comprising:

a combustion chamber;

a barrel for guiding the projectile along a flight path; and

a silencer comprising:

a proximal end and a distal end, the proximal end being configured for mounting the silencer to the barrel, the distal end being configured to allow the projectile to pass therethrough;

at least one vortex chamber disposed between the proximal end and the distal end, the at least one vortex chamber including a circular peripheral wall for inducing a vortex on at least a portion of the combustion gases expelled from the combustion chamber during launch of the projectile, the vortex impeding flow of the combustion gases from the barrel such that acoustic energy associated with the launch of the projectile is lessened;

an entry opening disposed on the proximal end of the silencer;

a discharge opening disposed on the distal end of the silencer wherein the entry opening and discharge opening are located along a longitudinal axis of the barrel and define a projectile path therebetween;

an inner cylindrical wall disposed about the projectile path;

an outer housing disposed about the inner cylindrical wall;

an expansion chamber formed by the inner cylindrical wall, the outer housing, the proximal end and the distal end of the silencer;

wherein the at least one vortex chamber further comprises a first vortex chamber in fluid communication with both the projectile path and the expansion chamber; and

a vent disposed in the inner cylindrical wall, the circular peripheral wall being disposed concentrically about the vent, the vent being configured to allow combustion gases to flow between the vortex chamber and the projectile path, and a nozzle disposed on the circular peripheral wall, wherein the nozzle is configured to introduce a first portion of the combustion gases into the first vortex chamber tangentially to the circular peripheral wall.

5. A weapon for launching a projectile with combustion gases, comprising:

a combustion chamber;

means for guiding the projectile along a flight path; and

means for silencing the weapon comprising:

a proximal end and a distal end, the proximal end being configured for mounting to the barrel, the distal end being configured to allow the projectile to pass therethrough;

a means for venting gas into an expansion chamber; and

means disposed concentrically about the vent means for including a circular peripheral wall for inducing a vortex on at least a portion of the combustion gases expelled from the combustion chamber into the expansion chamber during launch of the projectile.

* * * * *