United States Patent

WerBell, III

[15] **3,667,570**

[45] **June 6, 1972**

[54] **SILENCERS FOR FIREARMS, INTERNAL COMBUSTION ENGINES, OR THE LIKE**

[72] Inventor: **Mitchell L. WerBell, III,** Powder Springs, Ga.

[73] Assignees: **Michael H. Adair; Rosser S. Reeves, III,** New York, N.Y. ; attorneys-in-fact

[22] Filed: **Mar. 16, 1970**

[21] Appl. No.: **19,829**

Related U.S. Application Data

[63] Continuation-in-part of Ser. No. 700,239, Jan. 24, 1968, Pat. No. 3,500,955.

[52] **U.S. Cl.** .....**181/36 R,** 89/14 D, 181/33 D, 181/44, 181/57, 181/67, 181/68, 181/37

[51] **Int. Cl.**.....**F41f 17/12,** F41c 21/18, F01n 1/08

[58] **Field of Search** .....89/14, 14.2, 14.3, 14.4; 181/36, 36.4, 44–46, 47, 57, 58, 68, 70, 72, 47.1, 64.2, 65, 37, 45, 66, 67, 33 A, 61

[56] **References Cited**

UNITED STATES PATENTS

785,974	3/1905	McLean	89/14.3
880,386	2/1908	Maxim	89/14.4
971,083	9/1910	Shipley	181/57 X
1,111,202	9/1914	Westfall	181/65 X
1,354,416	9/1920	Oliver	89/14.4
1,462,158	7/1923	Wildner	89/14.4
1,770,471	7/1930	Hatcher	181/67 X
1,773,443	8/1930	Wilman	89/14.3
2,468,926	5/1949	Garrett	89/14.2
2,558,200	6/1951	Schmeling	89/14.3
2,602,255	7/1952	Cutts	89/14.3

FOREIGN PATENTS OR APPLICATIONS

493,462	5/1919	France	89/14.4
317,577	12/1919	Germany	89/14.4
629,404	4/1936	Germany	89/14.4
6,701	1899	Great Britain	89/14.3
498,775	1/1939	Great Britain	89/14.4
581,974	10/1946	Great Britain	89/14.4
242,743	11/1925	Great Britain	181/61

Primary Examiner—Robert S. Ward, Jr.
Attorney—Nolte and Nolte

[57] **ABSTRACT**

Silencers for use in conjunction with firearms and as mufflers for internal combustion engines and the like are provided with entry, suppression and resonant chambers arranged coaxially within a tubular housing. A plurality of helical suppressor elements are axially disposed in the suppression chamber and arranged in opposition to each other. The entry and resonate chambers may be provided with baffles. The entry chamber may be provided with an excess pressure relief valve. Orificed resilient plugs may be provided in the vicinity of the discharge end of the silencer particularly for use in conjunction with firearms. At the entry end of the silencer there may be provided a tube with an L-shaped slot permitting ready mounting of the silencer on the barrel of a firearm.

27 Claims, 11 Drawing Figures

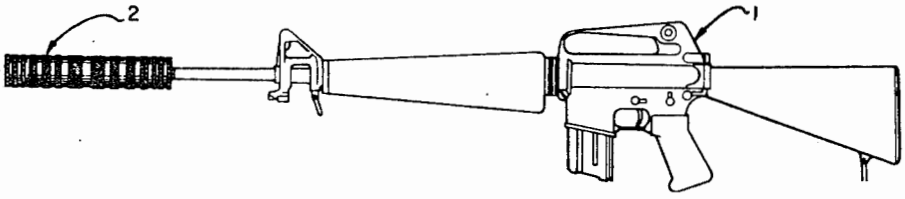

SilencerCo - EX1038 - U.S. Patent No. 3,667,570

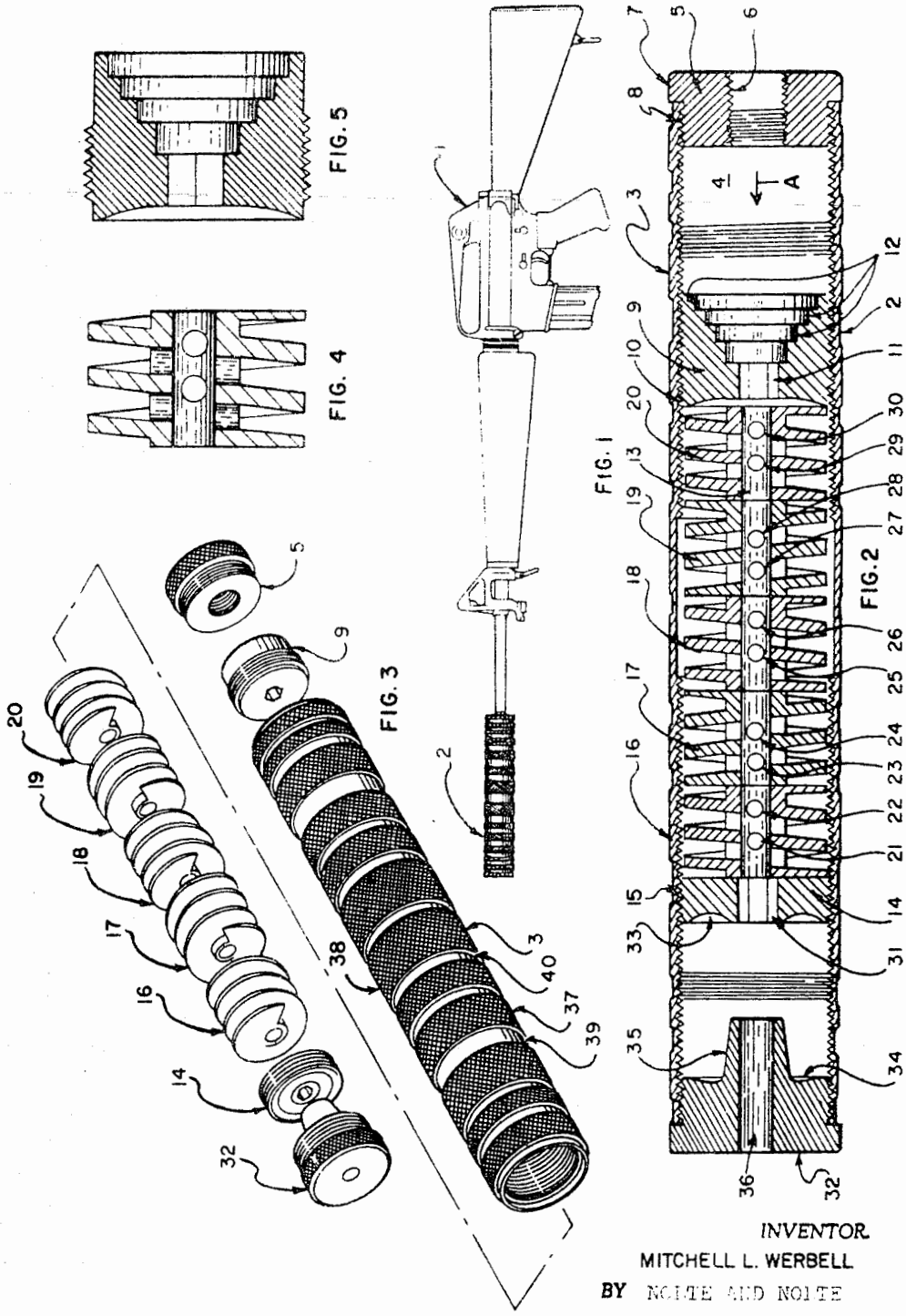

INVENTOR.
MITCHELL L. WERBELL
BY NOITE AND NOITE
ATTORNEYS

FIG.6

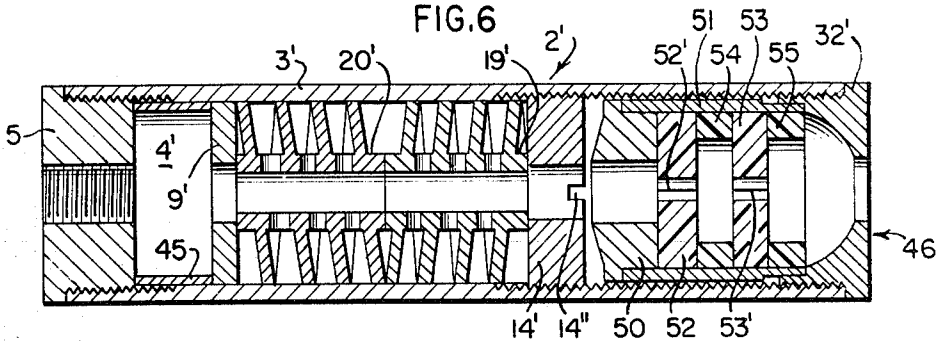

FIG.7

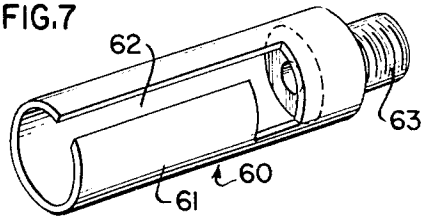

FIG.8

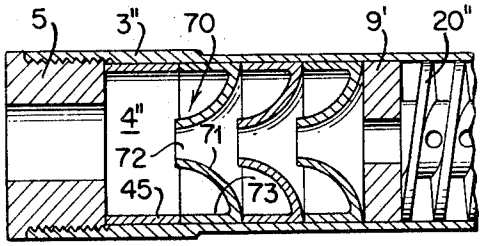

FIG.9

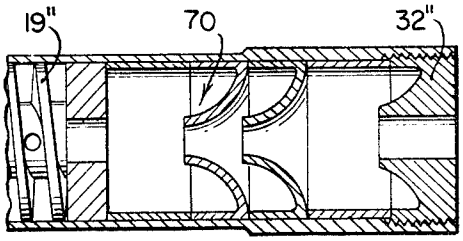

FIG.10

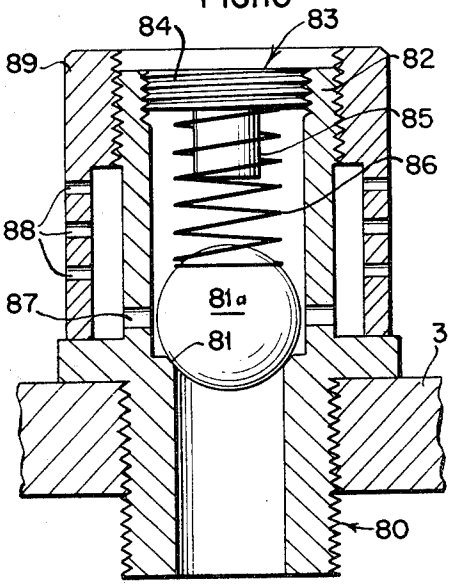

FIG.11

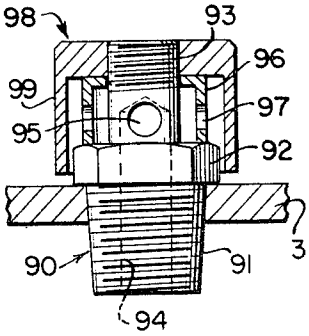

INVENTOR
Mitchell L. WerBell, III
BY
Nolte & Nolte
ATTORNEYS

SILENCERS FOR FIREARMS, INTERNAL COMBUSTION ENGINES, OR THE LIKE

This is a continuation-in-part of U.S. Pat. application Ser. No. 700,239, filed Jan. 24, 1968, now U.S. Pat. No. 3,500,955, issued Mar. 17, 1970.

This invention relates to silencers for use in conjunction with firearms and as a muffler for internal combustion engines and, more generally, in any instance in which it is desired to decrease the level of noise carried by a fluid. The silencers of the present invention are particularly adapted to decreasing the sound level resulting from the sudden expansion of a gas.

A silencer constructed according to one embodiment of this invention may comprise a plurality of helical suppressor elements disposed about an axial passageway together with a plurality of radially disposed ports arranged to establish communication from the passageway to the suppressor elements so that out-of-phase vibrations are supplied from the axial passageway to the suppressor units in such manner as substantially to neutralize each other. A suppression chamber is disposed adjacent to and in axial alignment with the suppression chamber and is provided with end walls having concave inwardly dished inner surfaces and an inwardly protruding throat portion is formed on the inner surface of the outer end wall, the resonant chamber being effective to damp and substantially to silence any unneutralized frequencies which escape from the suppression chamber. An entry chamber, disposed within the tubular outer housing and between the muzzle of the associated gun barrel and the entry end of the suppressor chamber functions as a pressure reducing chamber for supplying gaseous material to the suppression chamber following expulsion from the muzzle of the gun barrel.

According to another aspect of the invention, in the entry and/or the resonance chamber there may be positioned at least one and preferably a plurality of baffles each comprising a plate having an aperture therethrough surrounded by a wall which arcuately flares outwardly to define increasing diameters of the aperture. When such a baffle is positioned in the entry chamber, it is oriented so that diameter of the aperture increases as the distance from the baffle to the suppression zone decreases. Conversely, when such a baffle is placed in the resonance chamber, it is oriented so that the aperture diameter increases as the distance from the baffle to the suppression chamber increases. It is found that such baffles, particularly in conjunction with the helical element containing suppression zone provide greater suppression of sound. Insofar as firearms are concerned, this baffle is particularly useful in suppressors for higher caliber rifles and automatic weapons.

A further feature of the present invention is directed to greatly decreasing or eliminating the popping sound characteristic of a bullet discharging from a bore in alignment with the firing chamber of the firearm. To this end there is provided near the discharge of the silencer a plug of a resilient material, such as a rubber or a polyurethane or other resilient plastic. Through the plug is provided an aperture for passage of the bullet. The aperture is of diameter smaller than the bullet. The resiliency of the material of the plug permits passage of the bullet through the aperture. In a preferred embodiment, the plug is provided with at least one radial cut communicating with the orifice, the cut together with the radius of the orifice being at least equal to the radius of the bullet whereby the cut aids the passage of the bullet through the aperture and increases the useful life of the plug. Preferably, there is provided at least one diametrically opposed pair of such radial cuts. Moreover, against the discharge side of this first plug may be provided a second plug of a resilient material, the second plug having an orifice of greater diameter than the bullet. The second plug acts as a backup for the first plug. Specifically, the passage of the bullet through the orifice of the first plug causes the first plug to protrude into the orifice in the second plug. The support provided by the second plug helps decrease any tendency of the first plug to shear during passage of the bullet. There may be provided two or more abutting pairs of these plugs.

In yet another aspect of the invention, there is provided a mounting means for a silencer which utilizes the front sight on the barrel of a firearm for retaining the silencer on the firearm. This feature is particularly useful for use in conjunction with pistols. More particularly, at the entry end of the silencer is provided a tubular element of diameter slightly greater than the diameter of the barrel of the firearm and having a L-shaped slot. One arm of the L extends parallel to the axis of the tubular element, opens at the end of the tubular element which is free when the tubular element is associated with a silencer and is of a width at least slightly greater than the width of the front sight of the firearm in a direction perpendicular both to the axis of the barrel of the firearm and the height of the sight. At its opposite end this arm of the L-shaped slot communicates with the other arm of the L-shaped slot. The other arm is of a width taken on a line parallel to the axis of the tubular element at least slightly greater than the length of the front sight.

Hence, the tubular element carrying at its far end the suppressor is slid onto the barrel of the firearm with the front sight of the firearm being guided in the longitudinal arm of the slot and when the second arm of the slot is adjacent the front sight the entire silencer assembly including the tubular element is rotated in a direction counter to the direction in which the second arm extends from the first arm whereby the front sight is received in the second arm and the silencer is thereby prevented from being slid from the barrel of the firearm. Preferably, relatively snug fit is provided between the front sight and the second arm in order that the silencer not inadvertently be rotated to a position in which it may slide off the barrel.

In another feature of the invention, there is provided in communication with the interior of the silencer an excess pressure relief valve. This valve communicates preferably with the entry chamber of the silencer. The valve may be provided with a spring biased closure or may operate on a principle of provision of small cross section tortuous passages for the escaping gas whereby provision of moving parts may be avoided.

The invention will now be further described with reference to the accompanying drawing in which:

FIG. **1** is a side view of a rifle to the muzzle of which a silencer constructed according to this invention is affixed;

FIG. **2** is an enlarged cross-sectional view of a silencer constructed according to the invention;

FIG. **3** is an exploded view depicting the internal parts of the silencer in perspective after their removal from the tubular outer housing;

FIG. **4** is an enlarged cross-sectional view of one of the suppressor elements depicted in FIGS. **2** and **3**;

FIG. **5** is an enlarged cross-sectional view of an axially apertured partition which separates the entry chamber from the suppression chamber;

FIG. **6** is a cross-sectional view of another silencer constructed according to the invention;

FIG. **7** is an isometric view of means according to the invention mounting a silencer on the barrel of a firearm;

FIG. **8** is a modification of the entry chamber in a silencer such as of FIG. **2** to incorporate baffles according to the invention;

FIG. **9** is a modification of a resonance chamber in a silencer as of FIG. **2** to incorporate baffles according to the invention; and

FIGS. **10** and **11** are relief valves according to the invention to be incorporated in a silencer.

In FIG. **1** the numeral **1** designates generally a rifle to which a silencer generally designated by the numeral **2** is affixed.

Silencer **2** as best shown in FIG. **2** comprises an outer housing **3** which is internally threaded along a substantial portion of its inner surface and which therefore is adapted to receive the inner elements which constitute principal features of the invention.

At the entry end of tubular outer housing element 3, an entry chamber 4 is defined by flanged end wall element 5 which is externally threaded as indicated at 8 for cooperation with the internal threads of tubular outer housing 3. End wall 5 is internally threaded as indicated at 6 for receiving external threads formed on the exterior surface of the muzzle of the barrel of gun 1. A flange 7 forms an abutment ledge for engagement with the end of tubular outer housing 3.

At the opposite end of the entry chamber 4, an axially apertured partition 9 is disposed. Partition 9 is provided with external threads 10 which cooperate with the inner threads of tubular outer housing 3. The axial aperture 11 formed in partition 9 is of progressively diminishing diameter and is of stepped configuration as indicated at 12.

Thus as a projectile passes through the entry chamber in the direction indicated by the arrow A, relatively high pressure gas is admitted to the entry chamber as the projectile (bullet) clears the muzzle of the gun barrel. Similarly, when the device is employed as a muffler for an internal combustion engine, relatively high pressure gas would be admitted into the entry chamber. This high pressure gas is allowed quickly to expand and then to pass through the aperture 11, in the case of use with a firearm as the projectile completes its passage through partition 9.

The suppression chamber constructed according to this invention is defined at its ends by partition 9 and by partition 14. Partition 14 is externally threaded as designated at 15 and hence may be adjustably mounted with the tubular outer housing 10 in any desired axial position by simply rotating the partition 14 and thus causing axial movement thereof.

In order to provide for the application of out-of-phase vibrations to the oppositely disposed reversely wound helical suppressor elements 16–20 inclusive, a plurality of radial ports designated by the numerals 21–30 are spaced along passageway 13 so that these ports are progressively uncovered. Fluid is thus admitted first through radial port 30 and subsequently through radial port 29 and so on as the fluid proceeds from right to left as viewed in FIG. 2. Frequencies which are characteristic of the fluid adjacent to helical suppressor 20 must necessarily be out-of-phase with subsequently supplied vibrations adjacent the helical suppressor 19. Since suppressor elements 19 and 20 are reversely wound, the opposed vibrations tend to neutralize each other. Furthermore, this neutralizing action may, if desired, be emphasized by the use of more than a pair of suppressor elements such as 19 and 20, additional suppressor elements 16, 17, and 18 being depicted in the drawing. Of course, it will be understood that more than five suppressor units may be used if desired although satisfactory results may be achieved with only two such oppositely wound units particularly if the number of helical windings is sufficiently great of the order of six or eight, for example.

Any unsuppressed vibrations which pass through the aperture 31 formed axially in partition 14 are admitted to the resonant chamber defined by partition 14 and outer configuration as indicated by the numeral 33 about its aperture 31. Similarly, the inner surface of end wall 32 is dished as indicated at 34 and a throat portion 35 is formed on the inner surface of end wall 32. The throat portion 35 defines a part of the axial passageway 36 formed in end wall 32.

A sound deadening action is achieved by variations in the thickness of the tubular outer housing 3. Furthermore, these portions of different thicknesses are of varying lengths axially of the outer surface of tubular housing 3. For example, thick knurled portion 37 is of less axial length than thick knurled portion 38 as best shown for example in FIG. 3. Furthermore, thin unknurled portion 39 is of greater length axially than thin unknurled portion 40. These random variations have been found to be particularly effective as sound dampening means.

A suppressor 2′ in FIG. 6 is a variant from suppressor 2 of FIGS. 2 and 3. End wall element 5 is divided with external threads which engage internal threads in the housing 3′. Partition 14′ is provided with external threads which engage internal threads in the housing 2′. A slot 14″ is provided in the partition 14′ to permit its being threaded into the housing 3′ by means of a tool such as a screw driver. A partition 9′ is slidingly received in the housing 3′ and is separated from the end wall 5 to define an entry chamber 4′ by means of a spacer element 45. Between partition 9′ and partition 14′ are retained oppositely wound helical suppressors 19′ and 20′.

Provided at the discharge end of the suppressor 2′ is an assembly 46 which defines both at least the greater part of the resonance chamber, all of which lies between partition 14′ and end wall 32′,and a means for eliminating the otherwise occurring "popping" sound of a bullet exiting from the silencer.

Assembly 46 consists of apertured end wall defining elements 32′ and 50, a sleeve 51 and apertured plugs 52, 53, 54, and 55 of a resilient material such as a polyurethane. Sleeve 51 is press fit on end wall 50 and end wall 32′ it press fit onto sleeve 51. The assembly 46 is retained in the housing 3′ by means of external threads provided on the end wall 32′ which engage internal threads provided in the housing 3′.

The apertures in the plugs 52 and 53 are of smaller diameter than the bullet. However, each of these plugs is provided with diametrically opposed radial cuts which communicate with the aperture and which together with the aperture define a diameter at least equal to and preferably exceeding the diameter of the bullet. These radial cuts are designated 52′ and 53′ relative to plugs 52 and 53, respectively. Passage of the bullet through the aperture in the plug 52 causes the plug 52 to protrude into the aperture through the plug 54 and the plug 54 acts as a back-up to help prevent shearing of the plug 52. The plugs 53 and 55 likewise cooperate together. In some instances, it may preferred to provide that the plugs 54 and 55 be of a softer material than plugs 52 and 53.

When the plugs have worn out, the assembly 46 may simply be unthreaded from the housing and a new assembly threaded into the housing.

In FIG. 7 is illustrated a device which may be incorporated with a suppressor, such as that of FIGS. 2 and 3 or FIG. 6, to permit mounting of the suppressor on the barrel of a firearm, particularly a pistol, by means of the sight, in the form of, for example, an ear, conventionally provided at the muzzle end of the barrel. The mounting device 60 is in the configuration of a tube 61 provided with a L-shaped slot 62 and an apertured and externally threaded extension 63. The device 60 may be mounted on the suppressor of FIGS. 2 and 3 or that of FIG. 6 by means of the external threads on the extension 63 engaging the internal threads in the end wall 5. The internal diameter of the tube 61 is greater, preferably only slightly greater, than the external diameter of the barrel of the firearm. The longitudinal arm of the slot 62 which is parallel to the axis of the tube 61 is of a width at least slightly greater than the width of the sight at the muzzle of the barrel. The other arm of the slot 62 which is at right angles to the longitudinal arm, is of a dimension parallel to the axis of the tube 61 greater than the length of the sight and preferably only slightly greater. Hence, mounting of the suppressor is effected simply by sliding the tube 60 onto the barrel with the longitudinal arm of the slot 62 in alignment with and thereby receiving the front sight. Then, when the front sight reaches the other arm of the slot 62, the suppressor is rotated to position the sight in the other arm of the slot. If it is provided that the fit between the sight and the other arm of the slot be relatively snug, the suppressor will not inadvertently rotate from the position from which it is locked onto the barrel to the position in which it may be slid off the barrel.

In FIGS. 8 and 9 are illustrated the entry and resonance chambers, respectively, of a silencer according to the invention modified by incorporation therein of baffles according to the invention.

In FIG. 8, the entry chamber 4″ is defined between the end wall 5 having external threads engaging internal threads in the housing 3″ and the partition 9′ slidingly received in the housing 3″. The spacer element 45 defines an initial portion of the chamber 4″ which initial portion does not contain baffle con-

struction. Between the spacer element **45** and the partition **9'** are serially arranged identical baffles **70**. Each of the baffles **70** consists of arcuate walls **71** defining an aperture **72** of continually unidirectionally changing diameter and a cylindrical annular wall **73** joining with the wall **71** at the wide end of the aperture **72**. It will be appreciated that the actual structure operating as a baffle is the apertured wall **71** and that the wall **73** merely functions as a spacer element. It will be noted that in the embodiment illustrated in FIG. **9** the end wall **32'** is provided with an internal configuration closely similar to the configuration of the baffles **70**.

Excess pressure interfering with the most effective operation of the silencer may develop in the silencer housing particularly in the entry chamber. With this problem in mind, a relief valve communicating with the interior of the housing, particularly the entry chamber, may be provided. Two examples of such relief valves through the housing **3** are illustrated in FIGS. **10** and **11**.

In FIG. **10**, received in a threaded aperture in the housing **3** is an externally threaded hollow element **80** having a chamfered internal shoulder **81** defining a valve seat. A valve closure in the form of a ball **81***a*, such as a common ball bearing, rests on the valve seat **81**. The free end of an upwardly extending extension **82** of the element **80** is provided with both internal threads and external threads. Received on the extension **82** by means of the internal threads is an element **83** having an externally threaded shoulder **84** and a projection **85** defining a valve stop. Around the valve stop **85** and between the shoulder **84** and the ball **81***a* is retained a spring **86**. A predetermined pressure such as 200 p.s.i., on the side of the ball facing inwardly of the housing **3** is required to compress the spring **86** thereby to lift the ball **81***a* from the seat **81**. The valve stop **85** prevents over-compression of the spring **86**. Gas thereby released from with the housing **3** escapes through radial ports **87** provided in the extension **82** and radial ports **88** provided in a cap **89** mounted on the extension **82** by means of internal threads engaging the external threads of the extension **82**.

Another valve construction is illustrated in FIG. **11**. This valve construction has no moving parts and provides a continual bleed off to prevent excessive pressure build up. This valve consists of a nipple **90** having an externally threaded portion **91** which portion engages internal threads through the housing **3**. Portion **92** of the nipple **91** is in the configuration of a hexagonal nut to facilitate insertion into or removal from the housing **3** of the nipple **90** by means of a wrench. Extending upwardly from the portion **92** is a portion **93** provided with external threads. An axial bore **94** in the nipple **90** communicates with four radial apertures **95** (only one of which is shown in FIG. **11**) in the portion **93**. The apertures **95** are equidistantly spaced at 90° intervals around the periphery of the portion **93**. A wall defining element **96** provided with an axial bore slightly greater in diameter than the diameter of the nipple portion **93** is slidingly received onto the nipple portion **93**. The element **96** is provided with six radial apertures **97** (only two of which appear in FIG. **11**) equidistantly spaced at 60° intervals about the periphery of the element **96**. Element **96** is so oriented relative to nipple **90** that the apertures **97** are not in alignment with the apertures **95**. A cap **98** is provided with an internally threaded axial bore which threading engages the external threading on the nipple portion **93** whereby the cap **98** is secured to the nipple portion **93** and firmly retains the element **96** against the upper surface of the nipple portion **92**. The elements are so dimensioned with the internal diameter of the cap **98** slightly exceeding the diameter of the nipple portion **92** and the annular cylindrical side wall **99** of the cap **98** not quite reaching the housing **3** that a constricted and tortuous flow path for escaping gas thereby is defined. The path is further tortuous insofar as the apertures **95** and **97** are not aligned with each other. Hence, the valve serves to relieve excess pressure; on the other hand, excessive bleed off is prevented by means of a structure which causes a considerable pressure drop. An advantage of this construction is the absence of moving parts.

Not only does a silencer of this invention function effectively as a silencer, but when used with a firearm it also functions as a flash inhibitor so as effectively to render the flames of the associated powder burning action invisible.

While particular embodiments of the invention have been shown and described, the invention is not limited thereto and it is intended in the appended claims to cover such changes and modifications as fall within the true spirit and scope of the invention.

What is claimed is:

1. In a firearms silencer adapted to be mounted on a firearm in alignment with the firing chamber of the firearm to receive a bullet discharged from the firing chamber and comprising means defining a passage for the discharged bullet, the improvement comprising positioned in the passage a plug of a resilient material having therethrough in axial alignment with the passage a circular orifice of smaller diameter than the bullet and at least one radial cut communicating with the orifice, the radial cut together with the radius of the orifice being at least equal to the radius of the bullet, the resiliency of the material and the radial cut permitting the discharged bullet to pass through the orifice.

2. In the firearms silencer improvement according to claim **1**, a second radial cut communicating with the orifice, said second radial cut being of length at least equal to that of the first radial cut and in diametrical opposition to the first radial cut.

3. In a firearms silencer adapted to be mounted on a firearm in alignment with the firing chamber of the firearm to receive a bullet discharged from the firing chamber and comprising means defining a passage for the discharged bullet, the improvement comprising positioned in the passage a first plug of a resilient material having therethrough in axial alignment with the passage an orifice of smaller diameter than the bullet, the resiliency of the material permitting the discharged bullet to pass through the orifice, and a second plug of a resilient material abutting against the bullet exit side of the first plug and having therethrough in axial alignment with the orifice through the first plug an orifice of larger diameter than the bullet.

4. In a firearms silencer improvement according to claim **3**, a third plug of a resilient material having therethrough in axial alignment with the orifice through the second plug an orifice of smaller diameter than the bullet, the resiliency of the material of the third plug permitting the bullet to pass through the orifice of the third plug, and a fourth plug of a resilient material abutting against the bullet exit side of the third plug and having therethrough in axial alignment with the orifice of the third plug an orifice of larger diameter than the bullet.

5. In a firearms silencer improvement according to claim **3**, in which the first plug is provided with at least one radial cut communicating with the orifice of the first plug, the radial cut together with the radius of the orifice being at least equal to the radius of the bullet, the radial cut assisting in the permitting of the discharged bullet to pass through the orifice of the first plug.

6. In a firearms silencer improvement according to claim **5**, in which the first plug is provided with a second radial cut communicating with the orifice, said second radial cut being of length at least equal to that of the first radial cut and in diametrical opposition to the first radial cut.

7. In a firearms silencer improvement according to claim **4**, in which the third plug is provided with at least one radial cut communicating with the orifice of the third plug, the radial cut together with the radius of the orifice being at least equal to the radius of the bullet, the radial cut assisting in the permitting of the discharged bullet to pass through the orifice of the third plug.

8. In a firearms silencer improvement according to claim **7**, in which the third plug is provided with a second radial cut communicating with the orifice, said second radial cut being of length at least equal to that of the first radial cut and in diametrical opposition to the first radial cut.

9. A silencer comprising aligned entry and suppression chambers, the suppression chamber containing helical suppressor elements and the entry chamber being upstream from the suppression chamber, in the entry chamber at least one baffle comprising a plate having an aperture therethrough surrounded by a wall which arcuately flares outwardly to define increasingly greater diameters of the aperture as the distance from the baffle to the suppression zone decreases.

10. A silencer comprising aligned suppression and resonance chambers, the resonance chamber being positioned downstream from the suppression chamber, a plurality of helical suppressor elements disposed coaxially in the suppression chamber with adjacent helical elements arranged in opposition to each other, means defining an axial passageway through said helical elements and a plurality of radial ports by which communication is established between said passageway and said helical elements, said ports being spaced axially along said passageway whereby gaseous material in said passageway is supplied sequentially to said helical elements through said ports so that self-neutralizing opposed vibrations are produced, at least one baffle positioned in the resonance chamber, the baffle comprising a plate having an aperture therethrough surrounded by a wall which arcuately flares outwardly to define increasingly greater diameters of the aperture as the distance from the baffle to the suppression zone increases.

11. A silencer according to claim 9, in which a plurality of said baffles are positioned in the entry chamber.

12. A silencer according to claim 10, in which a plurality of said baffles are positioned in the resonance chamber.

13. A silencer comprising aligned entry, suppression and resonance chambers, the suppression chamber containing helical suppressor elements, the entry chamber being upstream from the suppression chamber and the resonance chamber being downstream from the suppression chamber, a plurality of baffles positioned in each of the entry chamber and resonance chamber, each of the baffles comprising a plate having an aperture therethrough surrounded by a wall which arcuately flares outwardly to define increasingly greater diameters of the aperture, the baffles in the entry chamber being so oriented that the diameter of the aperture of a respective baffle increases as the distance from the baffle to the suppression chamber decreases and the baffles in the resonance chamber being so oriented that the diameter of the aperture of a respective baffle increases as the distance from the baffle to the suppression chamber increases.

14. A silencer according to claim 13, further comprising a plurality of helical suppressor elements disposed coaxially in the suppression chamber with adjacent helical elements arranged in opposition to each other, means defining an axial passageway through said helical elements and a plurality of radial ports by which communication is established between said passageway and said helical elements, said ports being spaced axially along said passageway whereby gaseous material in said passageway is supplied sequentially to said helical elements through said ports so that self-neutralizing opposed vibrations are produced.

15. A silencer according to claim 14, further comprising a tubular outer housing defining the outer wall of the aligned chambers and wherein the thickness of the housing irregularly varies along the length thereof.

16. A silencer according to claim 14 further comprising a relief valve communicating between the interior of the entry chamber and the exterior of the suppressor.

17. A silencer according to claim 14, further comprising a mounting means in the form of a hollow element defining the entry end of the silencer and in axial alignment with the entry chamber, said hollow element being provided with a L-shaped slot having a longitudinal arm parallel to the axis of the element and opening at the free end of the element and a second arm communicating with the longitudinal arm and being oriented at right angles to the longitudinal arm.

18. A firearms silencer according to claim 14, further comprising positioned in the resonance chamber a plug of resilient material having therethrough in axial alignment with the passage an orifice of smaller diameter than the bullet to be discharged from the firearm and at least one radial cut communicating with the orifice, the radial cut together with the radius of the orifice being at least eaual to the radius of the bullet, the resiliency of the material and the radial cut permitting the discharged bullet to pass through the orifice.

19. A firearms silencer according to claim 18, in which the plug is provided with a second radial cut of length at least equal to that of the first radial cut and in diametrical opposition to the first radial cut.

20. A firearms silencer according to claim 17, further comprising positioned in the resonance chamber a first plug of resilient material having therethrough an orifice of smaller diameter than the bullet to be discharged by the firearm, the resiliency of the material permitting the discharged bullet to pass through the orifice, and a second plug of resilient material abutting against the bullet exit side of the first side and having therethrough in axial alignment with the orifice through the first plug an orifice of larger diameter than the bullet.

21. A firearms silencer according to claim 20, further comprising in the resonance chamber a third plug of resilient material having therethrough in axial alignment with the orifice through the second plug an orifice of smaller diameter than the bullet, the resiliency of the material of the third plug permitting the bullet to pass through the orifice of the third plug, and a fourth plug of resilient material abutting against the bullet exit side of the third plug and having therethrough in axial alignment with the orifice of the third plug an orifice of larger diameter than the bullet.

22. A firearms silencer according to claim 21, in which the first plug and the third plug are each provided with at least one radial cut communicating with the orifice of the respective plug, the radial cut together with the radius of the orifice of the respective plug being at least equal to the radius of the bullet, the radial cut assisting in the permitting of the discharged bullet to pass through the orifice of the respective plug.

23. In a silencer comprising a housing having an entry end and containing helical suppressor elements and a discharge end, the improvement comprising non-uniform variations of the thickness of the housing.

24. In a silencer comprising aligned entry and suppression chambers, the suppression chamber being downstream from the entry chamber and containing helical suppressor elements, the improvement comprising a relief valve communicating between the interior of the entry chamber and the exterior of the silencer.

25. In a silencer improvement according to claim 24, in which the relief valve comprises means defining a conduit communicating between the interior and the exterior of the silencer, closure means for the conduit mounted for reversible movement from a closed position to an open positon and spring means biasing the closure in a closed position toward the interior of the entry chamber.

26. In a silencer improvement according to claim 25, in which the closure comprises a wall.

27. In a silencer improvement according to claim 24, in which the relief valve comprises means defining a tortuous and constricted path between the interior of the entry chamber and the exterior of the silencer.

* * * * *