# 3GPP TS 36.300 V10.2.0 (2010-12)

*Technical Specification*

## 3rd Generation Partnership Project; Technical Specification Group Radio Access Network; Evolved Universal Terrestrial Radio Access (E-UTRA) and Evolved Universal Terrestrial Radio Access Network (E-UTRAN); Overall description; Stage 2 (Release 10)

The present document has been developed within the 3rd Generation Partnership Project (3GPP TM) and may be further elaborated for the purposes of 3GPP.
The present document has not been subject to any approval process by the 3GPP Organizational Partners and shall not be implemented.
This Specification is provided for future development work within 3GPP only. The Organizational Partners accept no liability for any use of this Specification.
Specifications and reports for implementation of the 3GPP TM system should be obtained via the 3GPP Organizational Partners' Publications Offices.

Keywords
UMTS, stage 2, radio, architecture

***3GPP***

Postal address

3GPP support office address
650 Route des Lucioles - Sophia Antipolis
Valbonne - FRANCE
Tel.: +33 4 92 94 42 00 Fax: +33 4 93 65 47 16

Internet
http://www.3gpp.org

***Copyright Notification***

No part may be reproduced except as authorized by written permission.
The copyright and the foregoing restriction extend to reproduction in all media.

© 2010, 3GPP Organizational Partners (ARIB, ATIS, CCSA, ETSI, TTA, TTC).
All rights reserved.

UMTS™ is a Trade Mark of ETSI registered for the benefit of its members
3GPP™ is a Trade Mark of ETSI registered for the benefit of its Members and of the 3GPP Organizational Partners
LTE™ is a Trade Mark of ETSI currently being registered for the benefit of its Members and of the 3GPP Organizational Partners
GSM® and the GSM logo are registered and owned by the GSM Association



Samsung Exhibit 1015, Page 2 of 198
Samsung Electronics Co., Ltd. v. Asus Technology Licensing Inc.
IPR2024-01217

# Contents

Foreword....12
1 Scope....13
2 References....13
3 Definitions, symbols and abbreviations....14
3.1 Definitions....14
3.2 Abbreviations....15
4 Overall architecture....18
4.1 Functional Split....19
4.2 Void....21
4.2.1 Void....21
4.2.2 Void....21
4.3 Radio Protocol architecture....21
4.3.1 User plane....21
4.3.2 Control plane....22
4.4 Synchronization....23
4.5 IP fragmentation....23
4.6 Support of HeNBs....23
4.6.1 Architecture....23
4.6.2 Functional Split....25
4.6.3 Interfaces....26
4.6.3.1 Protocol Stack for S1 User Plane....26
4.6.3.2 Protocol Stacks for S1 Control Plane....26
4.6.3.3 Protocol Stack for S5 interface....27
4.6.3.4 Protocol Stack for SGi interface....27
4.6.3.5 Protocol Stack for X2 User Plane and X2 Control Plane....27
4.6.4 Void....27
4.6.5 Support of LIPA with HeNB....28
4.7 Support for relaying....29
4.7.1 General....29
4.7.2 Architecture....29
4.7.3 S1 and X2 user plane aspects....30
4.7.4 S1 and X2 control plane aspects....31
4.7.5 Radio protocol aspects....32
4.7.6 Signalling procedures....33
4.7.6.1 RN attach procedure....33
4.7.6.2 E-RAB activation/modification....34
4.7.6.3 RN startup procedure....34
4.7.7 Relay Node OAM Aspects....37
4.7.7.1 Architecture....37
4.7.7.2 OAM Traffic QoS Requirements....37
4.7.7.3 Security Aspects....38
4.7.7.4 General Considerations....38
4.7.7.5 OAM Requirements for Configuration Parameters....38
4.7.7.5.1 Parameters Associated with Relay Bearer Mapping....38
5 Physical Layer for E-UTRA....38
5.1 Downlink Transmission Scheme....40
5.1.1 Basic transmission scheme based on OFDM....40
5.1.2 Physical-layer processing....40
5.1.3 Physical downlink control channel....41
5.1.4 Downlink Reference signal....41
5.1.5 Downlink multi-antenna transmission....41
5.1.6 MBSFN transmission....42
5.1.7 Physical layer procedure....42
5.1.7.1 Link adaptation....42



Samsung Exhibit 1015, Page 3 of 198
Samsung Electronics Co., Ltd. v. Asus Technology Licensing Inc.
IPR2024-01217

5.1.7.2 Power Control ... 42
5.1.7.3 Cell search ... 42
5.1.8 Physical layer measurements definition ... 42
5.2 Uplink Transmission Scheme ... 42
5.2.1 Basic transmission scheme ... 42
5.2.2 Physical-layer processing ... 43
5.2.3 Physical uplink control channel ... 43
5.2.4 Uplink Reference signal ... 44
5.2.5 Random access preamble ... 44
5.2.6 Uplink multi-antenna transmission ... 44
5.2.7 Physical channel procedure ... 44
5.2.7.1 Link adaptation ... 44
5.2.7.2 Uplink Power control ... 44
5.2.7.3 Uplink timing control ... 44
5.3 Transport Channels ... 45
5.3.1 Mapping between transport channels and physical channels ... 46
5.4 E-UTRA physical layer model ... 46
5.4.1 Void ... 46
5.4.2 Void ... 46
5.5 Carrier Aggregation ... 46

6 Layer 2 ... 47
6.1 MAC Sublayer ... 48
6.1.1 Services and Functions ... 49
6.1.2 Logical Channels ... 49
6.1.2.1 Control Channels ... 49
6.1.2.2 Traffic Channels ... 50
6.1.3 Mapping between logical channels and transport channels ... 50
6.1.3.1 Mapping in Uplink ... 50
6.1.3.2 Mapping in Downlink ... 50
6.2 RLC Sublayer ... 51
6.2.1 Services and Functions ... 51
6.2.2 PDU Structure ... 51
6.3 PDCP Sublayer ... 52
6.3.1 Services and Functions ... 52
6.3.2 PDU Structure ... 52
6.4 Carrier Aggregation ... 53

7 RRC ... 54
7.1 Services and Functions ... 54
7.2 RRC protocol states & state transitions ... 55
7.3 Transport of NAS messages ... 55
7.4 System Information ... 56
7.5 Carrier Aggregation ... 57

8 E-UTRAN identities ... 57
8.1 E-UTRAN related UE identities ... 57
8.2 Network entity related Identities ... 58

9 ARQ and HARQ ... 58
9.1 HARQ principles ... 58
9.2 ARQ principles ... 59
9.3 Void ... 60

10 Mobility ... 60
10.1 Intra E-UTRAN ... 60
10.1.1 Mobility Management in ECM-IDLE ... 60
10.1.1.1 Cell selection ... 60
10.1.1.2 Cell reselection ... 61
10.1.1.3 Void ... 62
10.1.1.4 Void ... 62
10.1.1.5 Void ... 62
10.1.2 Mobility Management in ECM-CONNECTED ... 62
10.1.2.1 Handover ... 62



Samsung Exhibit 1015, Page 4 of 198
Samsung Electronics Co., Ltd. v. Asus Technology Licensing Inc.
IPR2024-01217

10.1.2.1.1 C-plane handling ... 63
10.1.2.1.2 U-plane handling ... 66
10.1.2.2 Path Switch ... 67
10.1.2.3 Data forwarding ... 67
10.1.2.3.1 For RLC-AM DRBs ... 67
10.1.2.3.2 For RLC-UM DRBs ... 68
10.1.2.3.3 SRB handling ... 68
10.1.2.4 Void ... 69
10.1.2.5 Void ... 69
10.1.2.6 Void ... 69
10.1.2.7 Timing Advance ... 69
10.1.3 Measurements ... 69
10.1.3.1 Intra-frequency neighbour (cell) measurements ... 70
10.1.3.2 Inter-frequency neighbour (cell) measurements ... 70
10.1.4 Paging and C-plane establishment ... 71
10.1.5 Random Access Procedure ... 71
10.1.5.1 Contention based random access procedure ... 71
10.1.5.2 Non-contention based random access procedure ... 73
10.1.5.3 Interaction model between L1 and L2/3 for Random Access Procedure ... 74
10.1.6 Radio Link Failure ... 74
10.1.7 Radio Access Network Sharing ... 76
10.1.8 Handling of Roaming and Area Restrictions for UEs in ECM-CONNECTED ... 76
10.2 Inter RAT ... 76
10.2.1 Cell reselection ... 76
10.2.2 Handover ... 77
10.2.2a Inter-RAT cell change order to GERAN with NACC ... 77
10.2.2b Inter-RAT handovers from E-UTRAN ... 78
10.2.2b.1 Data forwarding ... 78
10.2.2b.1.1 For RLC-AM bearers ... 78
10.2.2b.1.2 For RLC-UM bearers ... 78
10.2.3 Measurements ... 78
10.2.3.1 Inter-RAT handovers from E-UTRAN ... 78
10.2.3.2 Inter-RAT handovers to E-UTRAN ... 79
10.2.3.3 Inter-RAT cell reselection from E-UTRAN ... 79
10.2.3.4 Limiting measurement load at UE ... 79
10.2.4 Network Aspects ... 79
10.2.5 CS fallback ... 79
10.3 Mobility between E-UTRAN and Non-3GPP radio technologies ... 80
10.3.1 UE Capability Configuration ... 80
10.3.2 Mobility between E-UTRAN and cdma2000 network ... 80
10.3.2.1 Tunnelling of cdma2000 Messages over E-UTRAN between UE and cdma2000 Access Nodes ... 80
10.3.2.2 Mobility between E-UTRAN and HRPD ... 81
10.3.2.2.1 Mobility from E-UTRAN to HRPD ... 81
10.3.2.2.1.1 HRPD System Information Transmission in E-UTRAN ... 81
10.3.2.2.1.2 Measuring HRPD from E-UTRAN ... 82
10.3.2.2.1.2.1 Idle Mode Measurement Control ... 82
10.3.2.2.1.2.2 Active Mode Measurement Control ... 82
10.3.2.2.1.2.3 Active Mode Measurement ... 82
10.3.2.2.1.3 Pre-registration to HRPD Procedure ... 82
10.3.2.2.1.4 E-UTRAN to HRPD Cell Re-selection ... 82
10.3.2.2.1.5 E-UTRAN to HRPD Handover ... 83
10.3.2.2.2 Mobility from HRPD to E-UTRAN ... 83
10.3.2.3 Mobility between E-UTRAN and cdma2000 1xRTT ... 83
10.3.2.3.1 Mobility from E-UTRAN to cdma2000 1xRTT ... 83
10.3.2.3.1.1 cdma2000 1xRTT System Information Transmission in E-UTRAN ... 83
10.3.2.3.1.2 Measuring cdma2000 1xRTT from E-UTRAN ... 83
10.3.2.3.1.2.1 Idle Mode Measurement Control ... 83
10.3.2.3.1.2.2 Active Mode Measurement Control ... 83
10.3.2.3.1.2.3 Active Mode Measurement ... 84
10.3.2.3.1.3 E-UTRAN to cdma2000 1xRTT Cell Re-selection ... 84
10.3.2.3.1.4 E-UTRAN to cdma2000 1xRTT Handover ... 84
10.3.2.3.2 Mobility from cdma2000 1xRTT to E-UTRAN ... 84



Samsung Exhibit 1015, Page 5 of 198
Samsung Electronics Co., Ltd. v. Asus Technology Licensing Inc.
IPR2024-01217

10.3.2.3.3 1xRTT CS Fallback ... 84
10.4 Area Restrictions ... 86
10.5 Mobility to and from CSG and Hybrid cells ... 87
10.5.0 Principles for idle-mode mobility with CSG cells ... 87
10.5.0.1 Intra-frequency mobility ... 87
10.5.0.2 Inter-frequency mobility ... 87
10.5.0.3 Inter-RAT Mobility ... 87
10.5.1 Inbound mobility to CSG cells ... 87
10.5.1.1 RRC_IDLE ... 87
10.5.1.2 RRC_CONNECTED ... 87
10.5.2 Outbound mobility from CSG cells ... 89
10.5.2.1 RRC_IDLE ... 89
10.5.2.2 RRC_CONNECTED ... 90
10.6 Measurement Model ... 90
10.7 Hybrid Cells ... 90
10.7.1 RRC_IDLE ... 90
10.7.2 RRC_CONNECTED ... 91
10.7.2.1 Inbound Mobility ... 91
10.7.2.2 Outbound Mobility ... 91

11 Scheduling and Rate Control ... 91
11.1 Basic Scheduler Operation ... 91
11.1.1 Downlink Scheduling ... 92
11.1.2 Uplink Scheduling ... 92
11.2 Activation/Deactivation Mechanism ... 93
11.3 Measurements to Support Scheduler Operation ... 93
11.4 Rate Control of GBR, MBR and UE-AMBR ... 93
11.4.1 Downlink ... 93
11.4.2 Uplink ... 93
11.5 CQI reporting for Scheduling ... 94
11.6 Explicit Congestion Notification ... 94

12 DRX in RRC_CONNECTED ... 94

13 QoS ... 96
13.1 Bearer service architecture ... 96
13.2 QoS parameters ... 97
13.3 QoS support in Hybrid Cells ... 97

14 Security ... 98
14.1 Overview and Principles ... 98
14.2 Security termination points ... 100
14.3 State Transitions and Mobility ... 100
14.3.1 RRC_IDLE to RRC_CONNECTED ... 100
14.3.2 RRC_CONNECTED to RRC_IDLE ... 100
14.3.3 Intra E-UTRAN Mobility ... 100
14.4 AS Key Change in RRC_CONNECTED ... 101
14.5 Security Interworking ... 101

15 MBMS ... 101
15.1 General ... 102
15.1.1 E-MBMS Logical Architecture ... 102
15.1.2 E-MBMS User Plane Protocol Architecture ... 104
15.1.3 E-MBMS Control Plane Protocol Architecture ... 105
15.2 MBMS Cells ... 105
15.2.1 MBMS-dedicated cell ... 105
15.2.2 MBMS/Unicast-mixed cell ... 106
15.3 MBMS Transmission ... 106
15.3.1 General ... 106
15.3.2 Single-cell transmission ... 106
15.3.3 Multi-cell transmission ... 106
15.3.4 MBMS Reception States ... 108
15.3.5 MCCH Structure ... 108
15.3.6 MBMS signalling on BCCH ... 108



Samsung Exhibit 1015, Page 6 of 198
Samsung Electronics Co., Ltd. v. Asus Technology Licensing Inc.
IPR2024-01217

15.3.7 MBMS User Data flow synchronisation ... 108
15.3.8 Synchronisation of MCCH Update Signalling via M2 ... 109
15.3.9 IP Multicast Distribution ... 110
15.4 Service Continuity ... 110
15.5 Network sharing ... 110
15.6 Network Functions for Support of Multiplexing ... 110
15.7 Procedures ... 111
15.7.1 Procedures for Broadcast mode ... 111
15.7.1.1 Session Start procedure ... 111
15.7.1.2 Session Stop procedure ... 112
15.7a M1 Interface ... 112
15.7a.1 M1 User Plane ... 112
15.8 M2 Interface ... 113
15.8.1 M2 Control Plane ... 113
15.8.2 M2 Interface Functions ... 114
15.8.2.1 General ... 114
15.8.2.2 MBMS Session Handling Function ... 114
15.8.2.3 MBMS Scheduling Information Provision Function ... 114
15.8.2.4 M2 Interface Management Function ... 114
15.8.2.5 M2 Configuration Function ... 114
15.8.2.6 MBMS Service Counting Function ... 114
15.8.3 M2 Interface Signalling Procedures ... 114
15.8.3.1 General ... 114
15.8.3.2 MBMS Session signalling procedure ... 115
15.8.3.3 MBMS Scheduling Information procedure ... 115
15.8.3.4 M2 Interface Management procedures ... 115
15.8.3.4.1 Reset procedure ... 115
15.8.3.4.2 Error Indication procedure ... 115
15.8.3.5 M2 Configuration procedures ... 115
15.8.3.5.1 M2 Setup procedure ... 115
15.8.3.5.2 eNB Configuration Update procedure ... 115
15.8.3.5.3 MCE Configuration Update procedure ... 116
15.8.3.6 MBMS Service Counting procedures ... 116
15.8.3.6.1 MBMS Service Counting Request procedure ... 116
15.8.3.6.2 MBMS Service Counting Results Report procedure ... 116
15.9 M3 Interface ... 116
15.9.1 M3 Control Plane ... 116
15.9.2 M3 Interface Functions ... 117
15.9.2.1 General ... 117
15.9.2.2 MBMS Session Handling Function ... 117
15.9.2.3 M3 Interface Management Function ... 117
15.9.3 M3 Interface Signalling Procedures ... 117
15.9.3.1 General ... 117
15.9.3.2 MBMS Session signalling procedure ... 117
15.9.3.3 M3 Interface Management procedures ... 117
15.9.3.3.1 Reset procedure ... 117
15.9.3.3.2 Error Indication procedure ... 118
15.10 MBMS Counting ... 118
15.10.1 General ... 118
15.10.2 Counting Procedure ... 118

16 Radio Resource Management aspects ... 118
16.1 RRM functions ... 119
16.1.1 Radio Bearer Control (RBC) ... 119
16.1.2 Radio Admission Control (RAC) ... 119
16.1.3 Connection Mobility Control (CMC) ... 119
16.1.4 Dynamic Resource Allocation (DRA) - Packet Scheduling (PS) ... 119
16.1.5 Inter-cell Interference Coordination (ICIC) ... 119
16.1.5.1 UE configurations for time domain ICIC ... 120
16.1.5.2 OAM requirements for time domain ICIC ... 120
16.1.5.2.1 Configuration for CSG cell ... 120
16.1.6 Load Balancing (LB) ... 120



Samsung Exhibit 1015, Page 7 of 198
Samsung Electronics Co., Ltd. v. Asus Technology Licensing Inc.
IPR2024-01217

16.1.7 Inter-RAT Radio Resource Management ... 120
16.1.8 Subscriber Profile ID for RAT/Frequency Priority ... 120
16.2 RRM architecture ... 121
16.2.1 Centralised Handling of certain RRM Functions ... 121
16.2.2 De-Centralised RRM ... 121
16.2.2.1 UE History Information ... 121
16.2.3 Void ... 121

17 Void ... 121
17.1 Void ... 121

18 UE capabilities ... 121

19 S1 Interface ... 123
19.1 S1 User plane ... 123
19.2 S1 Control Plane ... 123
19.2.1 S1 Interface Functions ... 124
19.2.1.1 S1 Paging function ... 125
19.2.1.2 S1 UE Context Management function ... 125
19.2.1.3 Initial Context Setup Function ... 125
19.2.1.3a UE Context Modification Function ... 125
19.2.1.4 Mobility Functions for UEs in ECM-CONNECTED ... 125
19.2.1.4.1 Intra-LTE Handover ... 125
19.2.1.4.2 Inter-3GPP-RAT Handover ... 125
19.2.1.5 E-RAB Service Management function ... 125
19.2.1.6 NAS Signalling Transport function ... 125
19.2.1.7 NAS Node Selection Function (NNSF) ... 125
19.2.1.8 S1-interface management functions ... 126
19.2.1.9 MME Load balancing Function ... 126
19.2.1.10 Location Reporting Function ... 126
19.2.1.11 Warning Message Transmission function ... 126
19.2.1.12 Overload Function ... 126
19.2.1.13 RAN Information Management Function ... 126
19.2.1.14 S1 CDMA2000 Tunnelling function ... 126
19.2.1.15 Configuration Transfer Function ... 126
19.2.1.16 LPPa Signalling Transport function ... 127
19.2.1.17 Trace Function ... 127
19.2.2 S1 Interface Signalling Procedures ... 127
19.2.2.1 Paging procedure ... 127
19.2.2.2 S1 UE Context Release procedure ... 127
19.2.2.2.1 S1 UE Context Release (EPC triggered) ... 127
19.2.2.2.2 S1 UE Context Release Request (eNB triggered) ... 128
19.2.2.3 Initial Context Setup procedure ... 128
19.2.2.3a UE Context Modification procedure ... 129
19.2.2.4 E-RAB signalling procedures ... 130
19.2.2.4.1 E-RAB Setup procedure ... 130
19.2.2.4.2 E-RAB Modification procedure ... 131
19.2.2.4.3 E-RAB Release procedure ... 132
19.2.2.4.4 E-RAB Release Indication procedure ... 132
19.2.2.5 Handover signalling procedures ... 133
19.2.2.5.1 Handover Preparation procedure ... 133
19.2.2.5.2 Handover Resource Allocation procedure ... 133
19.2.2.5.3 Handover Notification procedure ... 134
19.2.2.5.4 Handover Cancellation ... 134
19.2.2.5.5 Path Switch procedure ... 135
19.2.2.5.6 Message sequence diagrams ... 135
19.2.2.5.7 eNB Status Transfer procedure ... 142
19.2.2.5.8 MME Status Transfer procedure ... 143
19.2.2.6 NAS transport procedures ... 143
19.2.2.7 S1 interface Management procedures ... 145
19.2.2.7.1 Reset procedure ... 145
19.2.2.7.1a eNB initiated Reset procedure ... 145
19.2.2.7.1b MME initiated Reset procedure ... 145



Samsung Exhibit 1015, Page 8 of 198
Samsung Electronics Co., Ltd. v. Asus Technology Licensing Inc.
IPR2024-01217

19.2.2.7.2 Error Indication functions and procedures ... 146
19.2.2.7.2a eNB initiated error indication ... 146
19.2.2.7.2b MME initiated error indication ... 146
19.2.2.8 S1 Setup procedure ... 147
19.2.2.9 eNB Configuration Update procedure ... 147
19.2.2.9a eNB Configuration Transfer procedure ... 148
19.2.2.10 MME Configuration Update procedure ... 148
19.2.2.10a MME Configuration Transfer procedure ... 149
19.2.2.11 Location Reporting procedures ... 149
19.2.2.11.1 Location Reporting Control procedure ... 150
19.2.2.11.2 Location Report procedure ... 150
19.2.2.11.3 Location Report Failure Indication procedure ... 150
19.2.2.12 Overload procedure ... 151
19.2.2.12.1 Overload Start procedure ... 151
19.2.2.12.2 Overload Stop procedure ... 151
19.2.2.13 Write-Replace Warning procedure ... 151
19.2.2.14 eNB Direct Information Transfer procedure ... 152
19.2.2.15 MME Direct Information Transfer procedure ... 152
19.2.2.16 S1 CDMA2000 Tunnelling procedures ... 153
19.2.2.16.1 Downlink S1 CDMA2000 Tunnelling procedure ... 153
19.2.2.16.2 Uplink S1 CDMA2000 Tunnelling procedure ... 153
19.2.2.17 Kill procedure ... 154
19.2.2.18 LPPa Transport procedures ... 154
19.2.2.18.1 Downlink UE Associated LPPa Transport procedure ... 155
19.2.2.18.2 Uplink UE Associated LPPa Transport procedure ... 155
19.2.2.18.3 Downlink Non UE Associated LPPa Transport procedure ... 155
19.2.2.18.4 Uplink Non UE Associated LPPa Transport procedure ... 156
19.2.2.19 Trace procedures ... 156
19.2.2.19.1 Trace Start procedure ... 156
19.2.2.19.2 Trace Failure Indication procedure ... 157
19.2.2.19.3 Deactivate Trace procedure ... 157
19.2.2.19.4 Cell Traffic Trace procedure ... 157
19.2.2.20 UE Capability Info Indication procedure ... 157

20 X2 Interface ... 158
20.1 User Plane ... 158
20.2 Control Plane ... 158
20.2.1 X2-CP Functions ... 159
20.2.2 X2-CP Procedures ... 159
20.2.2.1 Handover Preparation procedure ... 160
20.2.2.2 Handover Cancel procedure ... 160
20.2.2.3 UE Context Release procedure ... 161
20.2.2.4 SN Status Transfer procedure ... 161
20.2.2.5 Error Indication procedure ... 161
20.2.2.6 Load Indication procedure ... 162
20.2.2.7 X2 Setup procedure ... 162
20.2.2.8 eNB Configuration Update procedure ... 163
20.2.2.9 Reset procedure ... 163
20.2.2.10 Resource Status Reporting Initiation procedure ... 164
20.2.2.11 Resource Status Reporting procedure ... 164
20.2.2.12 Radio Link Failure Indication procedure ... 165
20.2.2.13 Handover Report procedure ... 165
20.2.2.14 Mobility Settings Change procedure ... 165
20.2.2.15 Cell Activation procedure ... 166
20.2.3 Void ... 166

21 Void ... 167
21.1 Void ... 167
21.2 Void ... 167
21.3 Void ... 167

22 Support for self-configuration and self-optimisation ... 167
22.1 Definitions ... 167



Samsung Exhibit 1015, Page 9 of 198
Samsung Electronics Co., Ltd. v. Asus Technology Licensing Inc.
IPR2024-01217

22.2 UE Support for self-configuration and self-optimisation ... 168
22.3 Self-configuration ... 168
22.3.1 Dynamic configuration of the S1-MME interface ... 168
22.3.1.1 Prerequisites ... 168
22.3.1.2 SCTP initialization ... 168
22.3.1.3 Application layer initialization ... 169
22.3.2 Dynamic Configuration of the X2 interface ... 169
22.3.2.1 Prerequisites ... 169
22.3.2.2 SCTP initialization ... 169
22.3.2.3 Application layer initialization ... 169
22.3.2a Automatic Neighbour Relation Function ... 169
22.3.3 Intra-LTE/frequency Automatic Neighbour Relation Function ... 171
22.3.4 Inter-RAT/Inter-frequency Automatic Neighbour Relation Function ... 172
22.3.5 Framework for PCI Selection ... 173
22.3.6 TNL address discovery ... 173
22.3.6.1 TNL address discovery of candidate eNB via S1 interface ... 173
22.4 Self-optimisation ... 174
22.4.1 Support for Mobility Load Balancing ... 174
22.4.1.1 General ... 174
22.4.2 Support for Mobility Robustness Optimisation ... 176
22.4.2.1 General ... 176
22.4.2.2 Connection failure due to intra-LTE mobility ... 176
22.4.2.3 Unnecessary HO to another RAT ... 178
22.4.3 Support for RACH Optimisation ... 178
22.4.4 Support for Energy Saving ... 179
22.4.4.1 General ... 179
22.4.4.2 Solution description ... 179
22.4.4.3 O&M requirements ... 179
22.5 Void ... 180
22.6 Void ... 180

23 Others ... 180
23.1 Support for real time IMS services ... 180
23.1.1 IMS Emergency Call ... 180
23.2 Subscriber and equipment trace ... 180
23.2.1 Signalling activation ... 180
23.2.2 Management activation ... 181
23.3 E-UTRAN Support for Warning Systems ... 181
23.3.1 Earthquake and Tsunami Warning System ... 181
23.3.2 Commercial Mobile Alert System ... 181



Samsung Exhibit 1015, Page 10 of 198
Samsung Electronics Co., Ltd. v. Asus Technology Licensing Inc.
IPR2024-01217

**Annex A (informative): NAS Overview ....182**
A.1 Services and Functions ....182
A.2 NAS protocol states & state transitions ....182
**Annex B (informative): MAC and RRC Control ....183**
B.1 Difference between MAC and RRC control ....183
B.2 Void ....183
**Annex C (informative): Void ....184**
**Annex D (informative): Void ....184**
**Annex E (informative): Void ....184**
**Annex F (informative): Void ....184**
**Annex G (informative): Guideline for E-UTRAN UE capabilities ....185**
**Annex H (informative): Void ....186**
**Annex I (informative): SPID ranges ad mapping of SPID values to cell reselection and inter-RAT/inter frequency handover priorities ....186**
I.1 SPID ranges ....186
I.2 Reference SPID values ....186
**Annex J (informative): Carrier Aggregation ....188**
J.1 Deployment Scenarios ....188
J.2 Layer 2 Architecture ....189
J.3 RRC procedures ....189
J.3.1 System Information ....189
J.3.2 Connection Control ....189
J.3.3 Linking between UL and DL ....190
J.3.4 Measurements ....190
J.4 MAC procedures ....190
J.5 Idle mode procedures ....191
J.6 Inter-eNB Mobility ....191
**Annex K (informative): Time domain ICIC ....191**
K.1 Deployment scenarios ....191
K.1.1 CSG scenario ....191
K.1.2 Pico scenario ....192
**Annex L (informative): Relaying ....193**
L.1 Deployment scenarios ....193
L.2 User plane aspects ....193
L.3 RRC procedures ....194
L.3.1 General ....194
L.3.2 Radio link failure ....194
L.4 S1 and X2 proxy functionality ....194
L.5 Other ....194
**Annex M (informative): Change history ....195**



Samsung Exhibit 1015, Page 11 of 198
Samsung Electronics Co., Ltd. v. Asus Technology Licensing Inc.
IPR2024-01217

# Foreword

This Technical Specification has been produced by the 3rd Generation Partnership Project (3GPP).

The contents of the present document are subject to continuing work within the TSG and may change following formal TSG approval. Should the TSG modify the contents of the present document, it will be re-released by the TSG with an identifying change of release date and an increase in version number as follows:

Version x.y.z

where:

x the first digit:

1 presented to TSG for information;

2 presented to TSG for approval;

3 or greater indicates TSG approved document under change control.

y the second digit is incremented for all changes of substance, i.e. technical enhancements, corrections, updates, etc.

z the third digit is incremented when editorial only changes have been incorporated in the document.



Samsung Exhibit 1015, Page 12 of 198
Samsung Electronics Co., Ltd. v. Asus Technology Licensing Inc.
IPR2024-01217

# 1 Scope

The present document provides an overview and overall description of the E-UTRAN radio interface protocol architecture. Details of the radio interface protocols are specified in companion specifications of the 36 series.

# 2 References

The following documents contain provisions which, through reference in this text, constitute provisions of the present document.

- References are either specific (identified by date of publication, edition number, version number, etc.) or non-specific.
- For a specific reference, subsequent revisions do not apply.
- For a non-specific reference, the latest version applies. In the case of a reference to a 3GPP document (including a GSM document), a non-specific reference implicitly refers to the latest version of that document *in the same Release as the present document*.

[1] 3GPP TR 21.905: "Vocabulary for 3GPP Specifications".

[2] 3GPP TR 25.913: "Requirements for Evolved UTRA (E-UTRA) and Evolved UTRAN (E-UTRAN)".

[3] 3GPP TS 36.201: "Evolved Universal Terrestrial Radio Access (E-UTRA); Physical layer; General description".

[4] 3GPP TS 36.211:"Evolved Universal Terrestrial Radio Access (E-UTRA); Physical Channels and Modulation".

[5] 3GPP TS 36.212: "Evolved Universal Terrestrial Radio Access (E-UTRA); Multiplexing and channel coding".

[6] 3GPP TS 36.213: "Evolved Universal Terrestrial Radio Access (E-UTRA); Physical layer procedures".

[7] 3GPP TS 36.214: "Evolved Universal Terrestrial Radio Access (E-UTRA); Physical layer; Measurements".

[8] IETF RFC 4960 (09/2007): "Stream Control Transmission Protocol".

[9] 3GPP TS 36.302: "Evolved Universal Terrestrial Radio Access (E-UTRA); Services provided by the physical layer".

[10] Void

[11] 3GPP TS 36.304: "Evolved Universal Terrestrial Radio Access (E-UTRA); User Equipment (UE) procedures in idle mode".

[12] 3GPP TS 36.306: "Evolved Universal Terrestrial Radio Access (E-UTRA); User Equipment (UE) radio access capabilities".

[13] 3GPP TS 36.321: "Evolved Universal Terrestrial Radio Access (E-UTRA); Medium Acces Control (MAC) protocol specification".

[14] 3GPP TS 36.322: "Evolved Universal Terrestrial Radio Access (E-UTRA); Radio Link Control (RLC) protocol specification".

[15] 3GPP TS 36.323: "Evolved Universal Terrestrial Radio Access (E-UTRA); Packet Data Convergence Protocol (PDCP) specification".

[16] 3GPP TS 36.331: "Evolved Universal Terrestrial Radio Access (E-UTRA); Radio Resource Control (RRC) protocol specification".



Samsung Exhibit 1015, Page 13 of 198
Samsung Electronics Co., Ltd. v. Asus Technology Licensing Inc.
IPR2024-01217

[17] 3GPP TS 23.401: "Technical Specification Group Services and System Aspects; GPRS enhancements for E-UTRAN access".

[18] 3GPP TR 24.801: "3GPP System Architecture Evolution (SAE); CT WG1 aspects".

[19] 3GPP TS 23.402: "3GPP System Architecture Evolution: Architecture Enhancements for non-3GPP accesses".

[20] 3GPP TR 24.301: "Non-Access-Stratum (NAS) protocol for Evolved Packet System (EPS); Stage 3".

[21] 3GPP TS 36.133: "Evolved Universal Terrestrial Radio Access (E-UTRA); "Requirements for support of radio resource management".

[22] 3GPP TS 33.401: "3GPP System Architecture Evolution: Security Architecture".

[23] 3GPP TS 23.272: "Circuit Switched Fallback in Evolved Packet System; Stage 2".

[24] 3GPP TS 33.401: "3GPP System Architecture Evolution: Security Architecture".

[25] 3GPP TS 36.413: "Evolved Universal Terrestrial Radio Access Network (E-UTRAN); S1 Application Protocol (S1AP)".

[26] 3GPP TS 23.003: "Numbering, addressing and identification".

[27] 3GPP TR 25.922: "Radio Resource Management Strategies".

[28] 3GPP TS 23.216: "Single Radio voice Call continuity (SRVCC); Stage 2".

[29] 3GPP TS 32.421: "Subscriber and equipment trace: Trace concepts and requirements".

[30] 3GPP TS 32.422: "Subscriber and equipment trace; Trace control and configuration management".

[31] 3GPP TS 32.423: "Subscriber and equipment trace: Trace data definition and management".

[32] 3GPP TS 25.346: "Universal Mobile Telecommunications System (UMTS); Introduction of the Multimedia Broadcast/Multicast Service (MBMS) in the Radio Access Network (RAN); Stage 2".

[33] 3GPP TS 22.220: "Service Requirements for Home NodeBs and Home eNodeBs".

[34] 3GPP TS 22.268: "Public Warning System (PWS) Requirements".

[35] IETF RFC 3168 (09/2001): "The Addition of Explicit Congestion Notification (ECN) to IP".

[36] 3GPP TS 25.446: "MBMS synchronisation protocol (SYNC)".

[37] 3GPP TS 22.168: "Earthquake and Tsunami Warning System (ETWS) requirements; Stage 1".

[38] 3GPP TR 25.306: " UE Radio Access capabilities".

[39] 3GPP TS 29.060: "GPRS Tunnelling Protocol (GTP) across the Gn and Gp interface".

[40] 3GPP TS 29.274: "Tunnelling Protocol for Control Plane (GTPv2-C); Stage 3".

[41] 3GPP TS 29.061: "Interworking between the Public Land Mobile Network (PLMN) supporting packet based services and Packet Data Networks (PDN)".

[42] 3GPP TS 36.423: "Evolved Universal Terrestrial Radio Access Network (E-UTRAN); X2 Application Protocol (X2AP)".

# 3 Definitions, symbols and abbreviations

## 3.1 Definitions

For the purposes of the present document, the following terms and definitions apply.



Samsung Exhibit 1015, Page 14 of 198
Samsung Electronics Co., Ltd. v. Asus Technology Licensing Inc.
IPR2024-01217

**Carrier frequency**: center frequency of the cell.

**Cell:** combination of downlink and optionally uplink resources. The linking between the carrier frequency of the downlink resources and the carrier frequency of the uplink resources is indicated in the system information transmitted on the downlink resources.

**E-RAB:** An E-RAB uniquely identifies the concatenation of an S1 Bearer and the corresponding Data Radio Bearer. When an E-RAB exists, there is a one-to-one mapping between this E-RAB and an EPS bearer of the Non Access Stratum as defined in [17].

**CSG Cell:** A cell broadcasting a CSG indicator set to true and a specific CSG identity.

**Hybrid cell**: A cell broadcasting a CSG indicator set to false and a specific CSG identity. This cell is accessible as a CSG cell by UEs which are members of the CSG and as a normal cell by all other UEs.

**MBMS-dedicated cell**: cell dedicated to MBMS transmission. MBMS-dedicated cell is not supported in this release.

**Frequency layer**: set of cells with the same carrier frequency.

**Handover**: procedure that changes the serving cell of a UE in RRC_CONNECTED.

**MBMS/Unicast-mixed**: cell supporting both unicast and MBMS transmissions.

**Membership Verification:** The process that checks whether a UE is a member or non-member of a hybrid cell

**Access Control:** The process that checks whether a UE is allowed to access and to be granted services in a closed cell

**CSG ID Validation:** The process that checks whether the CSG ID received via handover messages is the same as the one broadcast by the target E-UTRAN

## 3.2 Abbreviations

For the purposes of the present document, the abbreviations given in TR 21.905 [1] and the following apply. An abbreviation defined in the present document takes precedence over the definition of the same abbreviation, if any, in TR 21.905 [1].

| | |
|---|---|
| 1xCSFB | Circuit Switched Fallback to 1xRTT |
| ABS | Almost Blank Subframe |
| ACK | Acknowledgement |
| ACLR | Adjacent Channel Leakage Ratio |
| AM | Acknowledged Mode |
| AMBR | Aggregate Maximum Bit Rate |
| ANR | Automatic Neighbour Relation |
| ARQ | Automatic Repeat Request |
| ARP | Allocation and Retention Priority |
| AS | Access Stratum |
| BCCH | Broadcast Control Channel |
| BCH | Broadcast Channel |
| BSR | Buffer Status Report |
| C/I | Carrier-to-Interference Power Ratio |
| CAZAC | Constant Amplitude Zero Auto-Correlation |
| CA | Carrier Aggregation |
| CBC | Cell Broadcast Center |
| CC | Component Carrier |
| CIF | Carrier Indicator Field |
| CMAS | Commercial Mobile Alert Service |
| CMC | Connection Mobility Control |
| CP | Cyclic Prefix |
| C-plane | Control Plane |
| C-RNTI | Cell RNTI |
| CQI | Channel Quality Indicator |
| CRC | Cyclic Redundancy Check |
| CSA | Common Subframe Allocation |



Samsung Exhibit 1015, Page 15 of 198
Samsung Electronics Co., Ltd. v. Asus Technology Licensing Inc.
IPR2024-01217

| | |
|---|---|
| CSG | Closed Subscriber Group |
| DCCH | Dedicated Control Channel |
| DeNB | Donor eNB |
| DFTS | DFT Spread OFDM |
| DL | Downlink |
| DRB | Data Radio Bearer |
| DRX | Discontinuous Reception |
| DTCH | Dedicated Traffic Channel |
| DTX | Discontinuous Transmission |
| DwPTS | Downlink Pilot Time Slot |
| ECGI | E-UTRAN Cell Global Identifier |
| ECM | EPS Connection Management |
| EMM | EPS Mobility Management |
| E-CID | Enhanced Cell-ID (positioning method) |
| eNB | E-UTRAN NodeB |
| EPC | Evolved Packet Core |
| EPS | Evolved Packet System |
| E-RAB | E-UTRAN Radio Access Bearer |
| ETWS | Earthquake and Tsunami Warning System |
| E-UTRA | Evolved UTRA |
| E-UTRAN | Evolved UTRAN |
| FDD | Frequency Division Duplex |
| FDM | Frequency Division Multiplexing |
| GERAN | GSM EDGE Radio Access Network |
| GNSS | Global Navigation Satellite System |
| GSM | Global System for Mobile communication |
| GBR | Guaranteed Bit Rate |
| GP | Guard Period |
| HARQ | Hybrid ARQ |
| HO | Handover |
| HRPD | High Rate Packet Data |
| HSDPA | High Speed Downlink Packet Access |
| ICIC | Inter-Cell Interference Coordination |
| IP | Internet Protocol |
| LB | Load Balancing |
| LCG | Logical Channel Group |
| LCR | Low Chip Rate |
| LCS | LoCation Service |
| LIPA | Local IP Access |
| LPPa | LTE Positioning Protocol Annex |
| L-GW | Local PDN Gateway |
| LTE | Long Term Evolution |
| MAC | Medium Access Control |
| MBMS | Multimedia Broadcast Multicast Service |
| MBR | Maximum Bit Rate |
| MBSFN | Multimedia Broadcast multicast service Single Frequency Network |
| MCCH | Multicast Control Channel |
| MCE | Multi-cell/multicast Coordination Entity |
| MCH | Multicast Channel |
| MCS | Modulation and Coding Scheme |
| MIB | Master Information Block |
| MIMO | Multiple Input Multiple Output |
| MME | Mobility Management Entity |
| MSA | MCH Subframe Allocation |
| MSI | MCH Scheduling Information |
| MSP | MCH Scheduling Period |
| MTCH | Multicast Traffic Channel |
| NACK | Negative Acknowledgement |
| NAS | Non-Access Stratum |
| NCC | Next Hop Chaining Counter |
| NH | Next Hop key |
| NNSF | NAS Node Selection Function |



Samsung Exhibit 1015, Page 16 of 198
Samsung Electronics Co., Ltd. v. Asus Technology Licensing Inc.
IPR2024-01217

| | |
|---|---|
| NR | Neighbour cell Relation |
| NRT | Neighbour Relation Table |
| OFDM | Orthogonal Frequency Division Multiplexing |
| OFDMA | Orthogonal Frequency Division Multiple Access |
| OTDOA | Observed Time Difference Of Arrival (positioning method) |
| P-GW | PDN Gateway |
| P-RNTI | Paging RNTI |
| PA | Power Amplifier |
| PAPR | Peak-to-Average Power Ratio |
| PBCH | Physical Broadcast CHannel |
| PBR | Prioritised Bit Rate |
| PCC | Primary Component Carrier |
| PCCH | Paging Control Channel |
| PCell | Primary Cell |
| PCFICH | Physical Control Format Indicator CHannel |
| PCH | Paging Channel |
| PCI | Physical Cell Identifier |
| PDCCH | Physical Downlink Control CHannel |
| PDSCH | Physical Downlink Shared CHannel |
| PDCP | Packet Data Convergence Protocol |
| PDN | Packet Data Network |
| PDU | Protocol Data Unit |
| PHICH | Physical Hybrid ARQ Indicator CHannel |
| PHY | Physical layer |
| PLMN | Public Land Mobile Network |
| PMCH | Physical Multicast CHannel |
| PRACH | Physical Random Access CHannel |
| PRB | Physical Resource Block |
| PSC | Packet Scheduling |
| PUCCH | Physical Uplink Control CHannel |
| PUSCH | Physical Uplink Shared CHannel |
| PWS | Public Warning System |
| QAM | Quadrature Amplitude Modulation |
| QCI | QoS Class Identifier |
| QoS | Quality of Service |
| RA-RNTI | Random Access RNTI |
| RAC | Radio Admission Control |
| RACH | Random Access Channel |
| RAT | Radio Access Technology |
| RB | Radio Bearer |
| RBC | Radio Bearer Control |
| RF | Radio Frequency |
| RIM | RAN Information Management |
| RLC | Radio Link Control |
| RN | Relay Node |
| RNC | Radio Network Controller |
| RNL | Radio Network Layer |
| RNTI | Radio Network Temporary Identifier |
| ROHC | Robust Header Compression |
| RRC | Radio Resource Control |
| RRM | Radio Resource Management |
| RU | Resource Unit |
| S-GW | Serving Gateway |
| S1-MME | S1 for the control plane |
| SCC | Secondary Component Carrier |
| SCell | Secondary Cell |
| SI | System Information |
| SIB | System Information Block |
| SI-RNTI | System Information RNTI |
| S1-U | S1 for the user plane |
| SAE | System Architecture Evolution |
| SAP | Service Access Point |



Samsung Exhibit 1015, Page 17 of 198
Samsung Electronics Co., Ltd. v. Asus Technology Licensing Inc.
IPR2024-01217

| | |
|---|---|
| SC-FDMA | Single Carrier – Frequency Division Multiple Access |
| SCH | Synchronization Channel |
| SDF | Service Data Flow |
| SDMA | Spatial Division Multiple Access |
| SDU | Service Data Unit |
| SeGW | Security Gateway |
| SFN | System Frame Number |
| SPID | Subscriber Profile ID for RAT/Frequency Priority |
| SR | Scheduling Request |
| SRB | Signalling Radio Bearer |
| SU | Scheduling Unit |
| TA | Tracking Area |
| TB | Transport Block |
| TCP | Transmission Control Protocol |
| TDD | Time Division Duplex |
| TEID | Tunnel Endpoint Identifier |
| TFT | Traffic Flow Template |
| TM | Transparent Mode |
| TNL | Transport Network Layer |
| TTI | Transmission Time Interval |
| UE | User Equipment |
| UL | Uplink |
| UM | Unacknowledged Mode |
| UMTS | Universal Mobile Telecommunication System |
| U-plane | User plane |
| UTRA | Universal Terrestrial Radio Access |
| UTRAN | Universal Terrestrial Radio Access Network |
| UpPTS | Uplink Pilot Time Slot |
| VRB | Virtual Resource Block |
| X2-C | X2-Control plane |
| X2-U | X2-User plane |

# 4 Overall architecture

The E-UTRAN consists of eNBs, providing the E-UTRA user plane (PDCP/RLC/MAC/PHY) and control plane (RRC) protocol terminations towards the UE. The eNBs are interconnected with each other by means of the X2 interface. The eNBs are also connected by means of the S1 interface to the EPC (Evolved Packet Core), more specifically to the MME (Mobility Management Entity) by means of the S1-MME and to the Serving Gateway (S-GW) by means of the S1-U. The S1 interface supports a many-to-many relation between MMEs / Serving Gateways and eNBs.

The E-UTRAN architecture is illustrated in Figure 4 below.



Samsung Exhibit 1015, Page 18 of 198
Samsung Electronics Co., Ltd. v. Asus Technology Licensing Inc.
IPR2024-01217

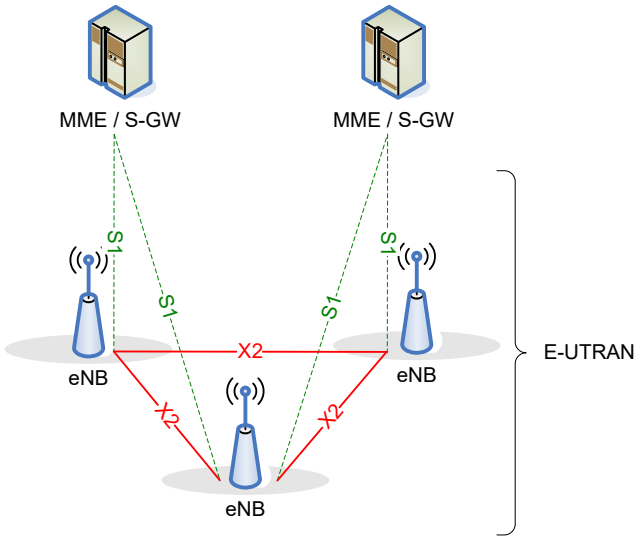


**Figure 4-1: Overall Architecture**

## 4.1 Functional Split

The eNB hosts the following functions:

- Functions for Radio Resource Management: Radio Bearer Control, Radio Admission Control, Connection Mobility Control, Dynamic allocation of resources to UEs in both uplink and downlink (scheduling);
- IP header compression and encryption of user data stream;
- Selection of an MME at UE attachment when no routing to an MME can be determined from the information provided by the UE;
- Routing of User Plane data towards Serving Gateway;
- Scheduling and transmission of paging messages (originated from the MME);
- Scheduling and transmission of broadcast information (originated from the MME or O&M);
- Measurement and measurement reporting configuration for mobility and scheduling;
- Scheduling and transmission of PWS (which includes ETWS and CMAS) messages (originated from the MME);
- CSG handling;
- Transport level packet marking in the uplink.

The DeNB hosts the following functions in addition to the eNB functions:

- S1/X2 proxy functionality for supporting RNs;
- S11 termination and S-GW/P-GW functionality for supporting RNs.

The MME hosts the following functions (see 3GPP TS 23.401 [17]):

- NAS signalling;
- NAS signalling security;
- AS Security control;
- Inter CN node signalling for mobility between 3GPP access networks;
- Idle mode UE Reachability (including control and execution of paging retransmission);



Samsung Exhibit 1015, Page 19 of 198
Samsung Electronics Co., Ltd. v. Asus Technology Licensing Inc.
IPR2024-01217

- Tracking Area list management (for UE in idle and active mode);
- PDN GW and Serving GW selection;
- MME selection for handovers with MME change;
- SGSN selection for handovers to 2G or 3G 3GPP access networks;
- Roaming;
- Authentication;
- Bearer management functions including dedicated bearer establishment;
- Support for PWS (which includes ETWS and CMAS) message transmission;
- Optionally performing paging optimisation.

NOTE 1: For macro eNBs, the MME should not filter the PAGING message based on the CSG IDs.

The Serving Gateway (S-GW) hosts the following functions (see 3GPP TS 23.401 [17]):

- The local Mobility Anchor point for inter-eNB handover;
- Mobility anchoring for inter-3GPP mobility;
- E-UTRAN idle mode downlink packet buffering and initiation of network triggered service request procedure;
- Lawful Interception;
- Packet routeing and forwarding;
- Transport level packet marking in the uplink and the downlink;
- Accounting on user and QCI granularity for inter-operator charging;
- UL and DL charging per UE, PDN, and QCI.

The PDN Gateway (P-GW) hosts the following functions (see 3GPP TS 23.401 [17]):

- Per-user based packet filtering (by e.g. deep packet inspection);
- Lawful Interception;
- UE IP address allocation;
- Transport level packet marking in the uplink and the downlink;
- UL and DL service level charging, gating and rate enforcement;
- DL rate enforcement based on APN-AMBR;

This is summarized on the figure below where yellow boxes depict the logical nodes, white boxes depict the functional entities of the control plane and blue boxes depict the radio protocol layers.

NOTE 2: There is no logical E-UTRAN node other than the eNB needed for RRM purposes.

NOTE 3: MBMS related functions in E-UTRAN are described separately in subclause 15.



Samsung Exhibit 1015, Page 20 of 198
Samsung Electronics Co., Ltd. v. Asus Technology Licensing Inc.
IPR2024-01217

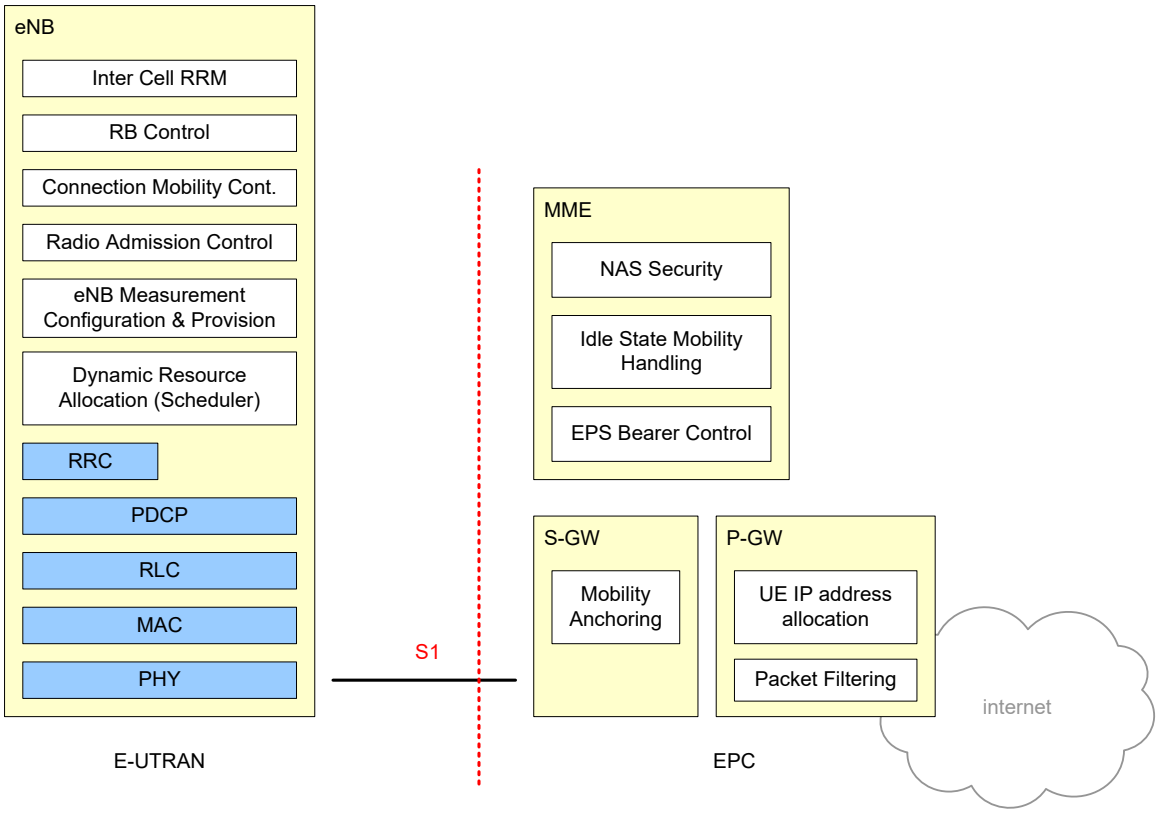


**Figure 4.1-1: Functional Split between E-UTRAN and EPC**

## 4.2 Void

### 4.2.1 Void

### 4.2.2 Void

## 4.3 Radio Protocol architecture

In this subclause, the radio protocol architecture of E-UTRAN is given for the user plane and the control plane.

### 4.3.1 User plane

The figure below shows the protocol stack for the user-plane, where PDCP, RLC and MAC sublayers (terminated in eNB on the network side) perform the functions listed for the user plane in subclause 6, e.g. header compression, ciphering, scheduling, ARQ and HARQ;



Samsung Exhibit 1015, Page 21 of 198
Samsung Electronics Co., Ltd. v. Asus Technology Licensing Inc.
IPR2024-01217

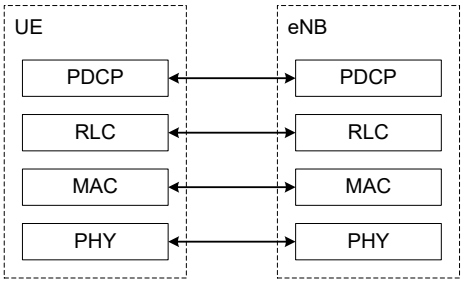


**Figure 4.3.1-1: User-plane protocol stack**

## 4.3.2 Control plane

The figure below shows the protocol stack for the control-plane, where:

- PDCP sublayer (terminated in eNB on the network side) performs the functions listed for the control plane in subclause 6, e.g. ciphering and integrity protection;
- RLC and MAC sublayers (terminated in eNB on the network side) perform the same functions as for the user plane;
- RRC (terminated in eNB on the network side) performs the functions listed in subclause 7, e.g.:
  - Broadcast;
  - Paging;
  - RRC connection management;
  - RB control;
  - Mobility functions;
  - UE measurement reporting and control.
- NAS control protocol (terminated in MME on the network side) performs among other things:
  - EPS bearer management;
  - Authentication;
  - ECM-IDLE mobility handling;
  - Paging origination in ECM-IDLE;
  - Security control.

NOTE: the NAS control protocol is not covered by the scope of this TS and is only mentioned for information.



Samsung Exhibit 1015, Page 22 of 198
Samsung Electronics Co., Ltd. v. Asus Technology Licensing Inc.
IPR2024-01217

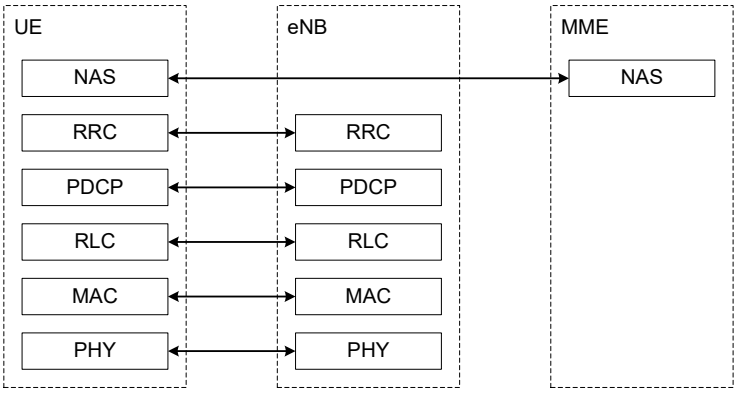


**Figure 4.3.2-1: Control-plane protocol stack**

# 4.4 Synchronization

Diverse methods and techniques are preferred depending on synchronization requirements. As no single method can cover all E-UTRAN applications a logical port at eNB may be used for reception of timing and/or frequency and/or phase inputs pending to the synchronization method chosen.

# 4.5 IP fragmentation

Fragmentation function in IP layer on S1 and X2 shall be supported.

Configuration of S1-U (X2-U) link MTU in the eNB according to the MTU of the network domain the node belongs to shall be considered as a choice at network deployment. The network may employ various methods to handle IP fragmentation, but the specific methods to use are implementation dependant.

# 4.6 Support of HeNBs

## 4.6.1 Architecture

Figure 4.6.1-1 shows a logical architecture for the HeNB that has a set of S1 interfaces to connect the HeNB to the EPC.

The configuration and authentication entities as shown here should be common to HeNBs and HNBs.

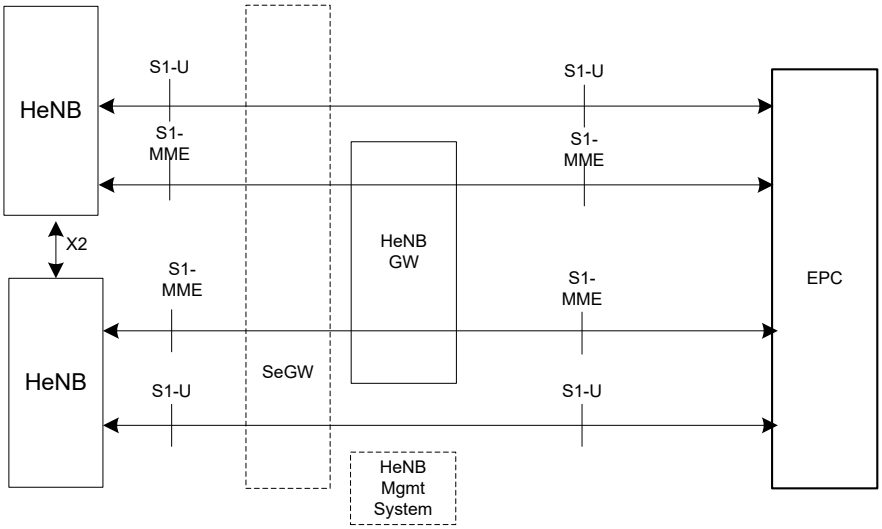


**Figure 4.6.1-1: E-UTRAN HeNB Logical Architecture**



Samsung Exhibit 1015, Page 23 of 198
Samsung Electronics Co., Ltd. v. Asus Technology Licensing Inc.
IPR2024-01217

The E-UTRAN architecture may deploy a Home eNB Gateway (HeNB GW) to allow the S1 interface between the HeNB and the EPC to support a large number of HeNBs in a scalable manner. The HeNB GW serves as a concentrator for the C-Plane, specifically the S1-MME interface. The S1-U interface from the HeNB may be terminated at the HeNB GW, or a direct logical U-Plane connection between HeNB and S-GW may be used (as shown in Figure 4.6.1-1).

The S1 interface is defined as the interface:

- Between the HeNB GW and the Core Network,
- Between the HeNB and the HeNB GW,
- Between the HeNB and the Core Network,
- Between the eNB and the Core Network.

The HeNB GW appears to the MME as an eNB. The HeNB GW appears to the HeNB as an MME. The S1 interface between the HeNB and the EPC is the same whether the HeNB is connected to the EPC via a HeNB GW or not.

The HeNB GW shall connect to the EPC in a way that inbound and outbound mobility to cells served by the HeNB GW shall not necessarily require inter MME handovers. One HeNB serves only one cell.

The functions supported by the HeNB shall be the same as those supported by an eNB (with possible exceptions e.g. NNSF) and the procedures run between a HeNB and the EPC shall be the same as those between an eNB and the EPC (with possible exceptions e.g. S5 procedures in case of LIPA support).

X2-based HO between HeNBs is allowed if no access control at the MME is needed, i.e. when the handover is between closed/hybrid access HeNBs having the same CSG ID or when the target HeNB is an open access HeNB.

This version of the specification supports direct X2-connectivity between HeNBs, independent of whether any of the involved HeNBs is connected to a HeNB GW.

The overall E-UTRAN architecture with deployed HeNB GW is shown below.

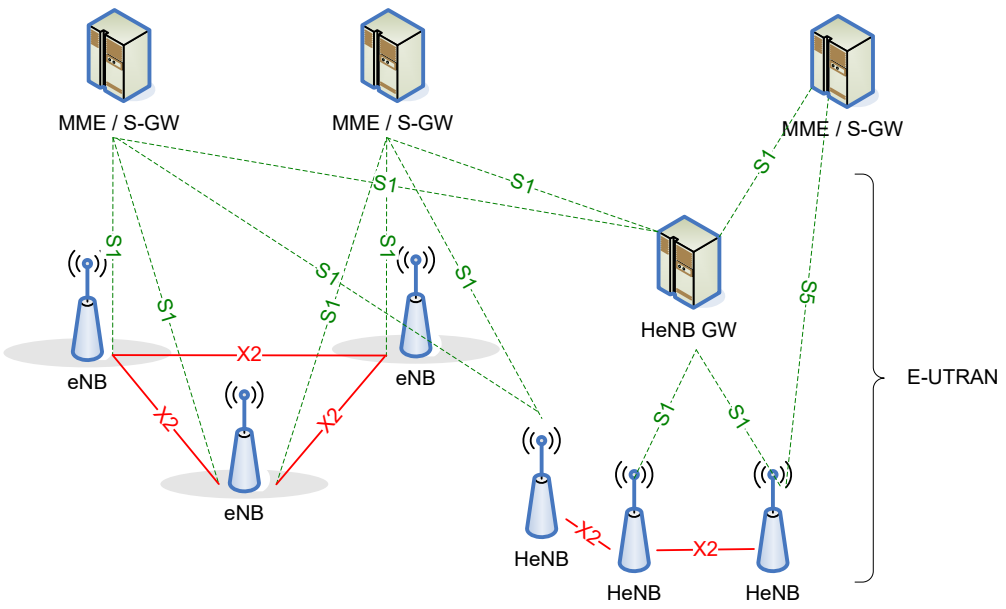


**Figure 4.6.1-2: Overall E-UTRAN Architecture with deployed HeNB GW.**

NOTE: In the figure above, a HeNB operating in LIPA mode has been represented with its S5 interface.

Only if the HeNB supports the LIPA function, it shall support an S5 interface towards the S-GW and an SGi interface towards the residential/IP network. See section 4.6.5 for the details of the architecture and functions in case of LIPA support.



Samsung Exhibit 1015, Page 24 of 198
Samsung Electronics Co., Ltd. v. Asus Technology Licensing Inc.
IPR2024-01217

### 4.6.2 Functional Split

The HeNB hosts the same functions as an eNB as described in section 4.1, with the following additional specifications in case of connection to the HeNB GW:

- Discovery of a suitable Serving HeNB GW;
- A HeNB shall only connect to a single HeNB GW at one time, namely no S1 Flex function shall be used at the HeNB:
  - The HeNB will not simultaneously connect to another HeNB GW, or another MME.
- The TAC and PLMN ID used by the HeNB shall also be supported by the HeNB GW;
- Selection of an MME at UE attachment is hosted by the HeNB GW instead of the HeNB;
- HeNBs may be deployed without network planning. A HeNB may be moved from one geographical area to another and therefore it may need to connect to different HeNB GWs depending on its location.

Regardless of HeNB GW connection:

- The HeNB may support the LIPA function. See section 4.6.5 for details.

The HeNB GW hosts the following functions:

- Relaying UE-associated S1 application part messages between the MME serving the UE and the HeNB serving the UE;
- Terminating non-UE associated S1 application part procedures towards the HeNB and towards the MME. Note that when a HeNB GW is deployed, non-UE associated procedures shall be run between HeNBs and the HeNB GW and between the HeNB GW and the MME.
- Optionally terminating S1-U interface with the HeNB and with the S-GW.
- Supporting TAC and PLMN ID used by the HeNB.
- X2 interfaces shall not be established between the HeNB GW and other nodes.

A list of CSG IDs may be included in the PAGING message. If included, the HeNB GW may use the list of CSG IDs for paging optimization.

In addition to functions specified in section 4.1, the MME hosts the following functions:

- Access control for UEs that are members of Closed Subscriber Groups (CSG):
  - In case of handovers to CSG cells, access control is based on the target CSG ID provided to the MME by the serving E-UTRAN.
- Membership Verification for UEs handing over to hybrid cells:
  - In case of handovers to hybrid cells Membership Verification is triggered by the presence of the Cell Access Mode and it is based on the target CSG ID provided to the MME by the serving E-UTRAN.
- CSG membership status signalling to the target E-UTRAN in case of attachment/handover to hybrid cells and in case of the change of membership status when a UE is served by a CSG cell or a hybrid cell.
- Supervising the eNB action after the change in the membership status of a UE.
- Routing of handover messages and MME configuration transfer messages towards HeNB GWs based on the TAI contained in these messages.

NOTE: The MME or HeNB GW should not include the list of CSG IDs for paging when sending the paging message directly to an un-trusted HeNB or eNB.

- The MME may support the LIPA function with HeNB. See details of this support in section 4.6.5.



Samsung Exhibit 1015, Page 25 of 198
Samsung Electronics Co., Ltd. v. Asus Technology Licensing Inc.
IPR2024-01217

## 4.6.3 Interfaces

### 4.6.3.1 Protocol Stack for S1 User Plane

The S1-U data plane is defined between the HeNB, HeNB GW and the S-GW. The figures below show the S1-U protocol stack with and without the HeNB GW.

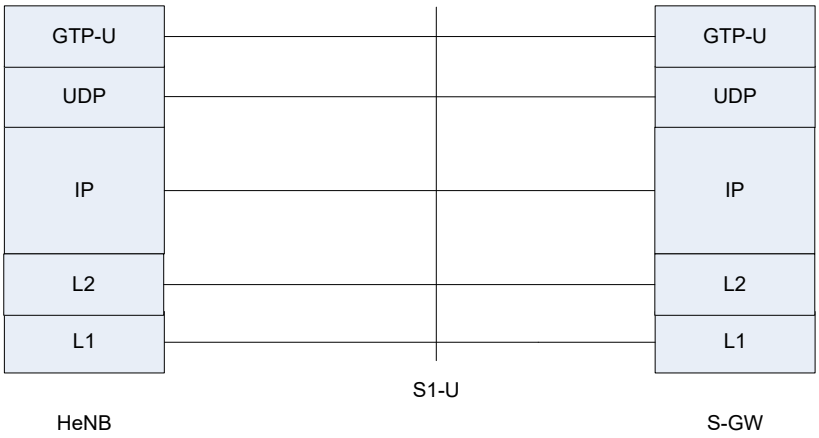


**Figure 4.6.3.1-1: User plane for S1-U interface for HeNB without HeNB GW**

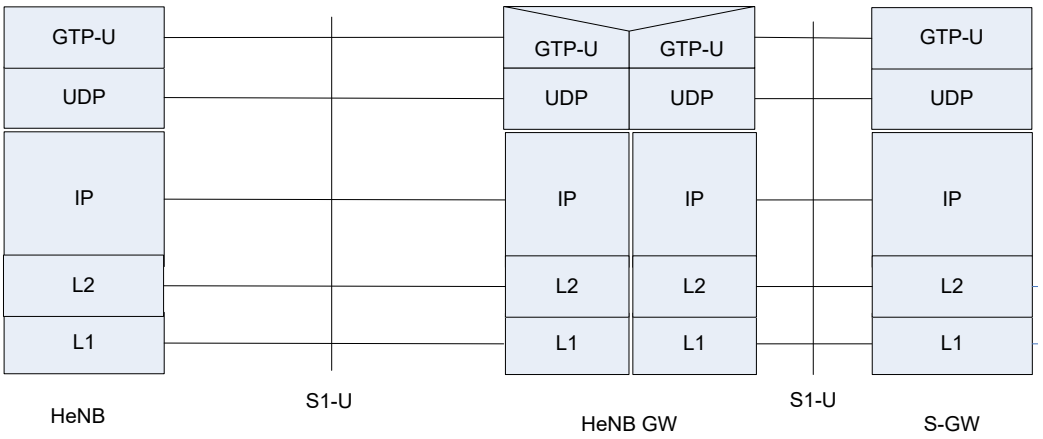


**Figure 4.6.3.1-2: User plane for S1-U interface for HeNB with HeNB GW**

The HeNB GW may optionally terminate the user plane towards the HeNB and towards the S-GW, and provide a relay function for relaying User Plane data between the HeNB and the S-GW.

### 4.6.3.2 Protocol Stacks for S1 Control Plane

The two figures below show the S1-MME protocol stacks with and without the HeNB GW.

When the HeNB GW is not present (Fig. 4.6.3.2-1), all the S1 procedures are terminated at the HeNB and the MME.

When present (Fig. 4.6.3.2-2), the HeNB GW shall terminate the non-UE-dedicated procedures – both with the HeNB, and with the MME. The HeNB GW shall provide a relay function for relaying Control Plane data between the HeNB and the MME. The scope of any protocol function associated to a non-UE-dedicated procedure shall be between HeNB and HeNB GW and/or between HeNB GW and MME.

Any protocol function associated to an UE-dedicated-procedure shall reside within the HeNB and the MME only.



Samsung Exhibit 1015, Page 26 of 198
Samsung Electronics Co., Ltd. v. Asus Technology Licensing Inc.
IPR2024-01217

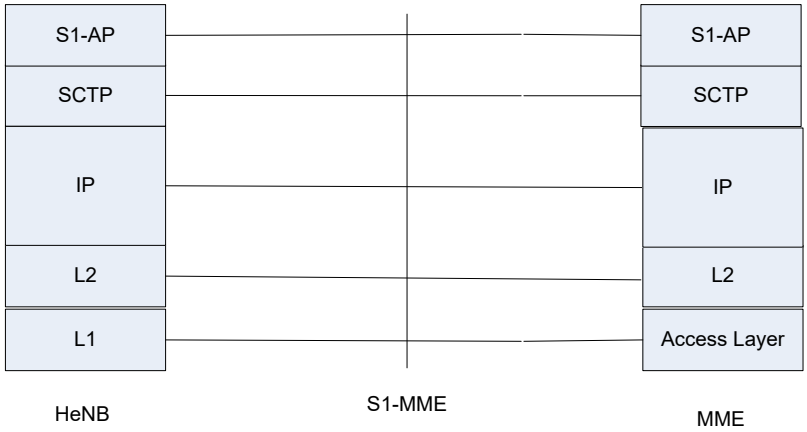


**Figure 4.6.3.2-1: Control plane for S1-MME Interface for HeNB to MME without the HeNB GW**

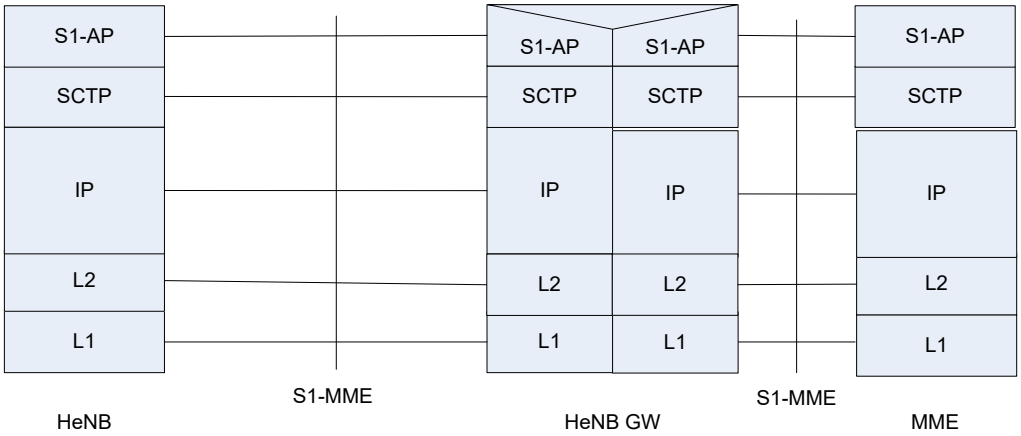


**Figure 4.6.3.2-2: Control plane for S1-MME Interface for HeNB to MME with the HeNB GW**

### 4.6.3.3 Protocol Stack for S5 interface

The protocol stack for S5 interface can be found in [39] for the user plane and in [40] for the control plane.

### 4.6.3.4 Protocol Stack for SGi interface

The protocol stack for SGi interface can be found in [41].

### 4.6.3.5 Protocol Stack for X2 User Plane and X2 Control Plane

The protocol stack for X2 User Plane and X2 Control Plane is reported in Section 6.4 of [3].

## 4.6.4 Void



Samsung Exhibit 1015, Page 27 of 198
Samsung Electronics Co., Ltd. v. Asus Technology Licensing Inc.
IPR2024-01217

### 4.6.5 Support of LIPA with HeNB

Figure 4.6.5-1 shows the logical architecture for the HeNB when it supports LIPA function.

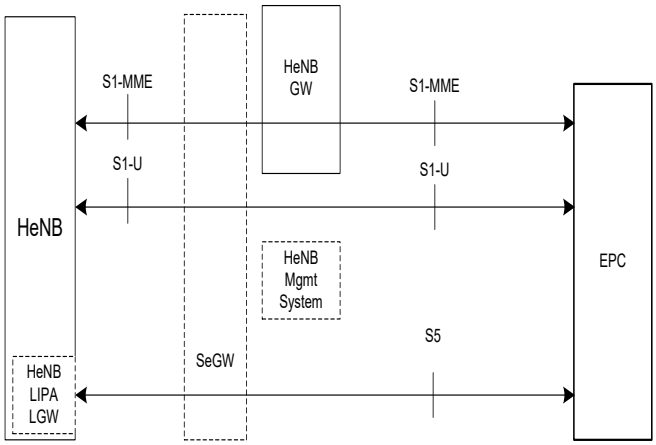


**Figure 4.6.5-1: E-UTRAN HeNB operating in LIPA mode Logical Architecture**

For a LIPA PDN connection, the HeNB sets up and maintains an S5 connection to the EPC.

The S5 interface does not go via the HeNB GW even when present.

The HeNB may reuse the IP address used for S1 interface for this S5 interface in order to reuse the S1 IPSEC tunnel or it may also use another IP address which would result in the establishment of another IPSEC tunnel.

The LIPA connection is always released at outgoing handover. It is FFS which node triggers this release.

In case of LIPA support, the HeNB supports the following additional functions, regardless of the presence of a HeNB GW:

- transfer of the collocated L-GW IP address of the HeNB over S1-MME to the EPC at every idle-active transition,
- transfer of the collocated L-GW IP address of the HeNB over S1-MME to the EPC at every uplink transfer of a NAS PDU in connected mode,
- support of basic P-GW functions in the collocated L-GW function such as support of the SGi interface corresponding to LIPA,
- additional support of first packet sending, buffering of subsequent packets, internal direct L-GW - HeNB user path management,
- Support of the necessary restricted set of S5 procedures corresponding to the strict support of LIPA function as specified in [17],
- notification to the EPC of the collocated L-GW function uplink TEIDs for the LIPA bearers over S5 interface within the restricted set of procedures and also over S1-MME as “correlation id” for correlation purposes between the collocated L-GW function and the HeNB,
- FFS in case of outgoing handover to release the LIPA PDN connection and only handover the non-LIPA E-RABs.

In case of LIPA support, the MME may support the following additional functions:



Samsung Exhibit 1015, Page 28 of 198
Samsung Electronics Co., Ltd. v. Asus Technology Licensing Inc.
IPR2024-01217

- verification of UE authorization to request LIPA activation for the requested APN at this CSG and transfer of the received collocated L-GW IP address,
- transfer of the "correlation id" i.e. collocated L-GW uplink TEID to the HeNB within the UE context setup procedure.

# 4.7 Support for relaying

## 4.7.1 General

E-UTRAN supports relaying by having a Relay Node (RN) wirelessly connect to an eNB serving the RN, called Donor eNB (DeNB), via a modified version of the E-UTRA radio interface, the modified version being called the Un interface.

The RN supports the eNB functionality meaning it terminates the radio protocols of the E-UTRA radio interface, and the S1 and X2 interfaces. From a specification point of view, functionality defined for eNBs, e.g. RNL and TNL, also applies to RNs unless explicitly specified. RNs do not support NNSF.

In addition to the eNB functionality, the RN also supports a subset of the UE functionality, e.g. physical layer, layer-2, RRC, and NAS functionality, in order to wirelessly connect to the DeNB.

NOTE: Inter-cell handover is not supported for RNs.

NOTE: It is up to implementation when the RN starts or stops serving UEs.

NOTE: An RN may not use another RN as its DeNB.

## 4.7.2 Architecture

The architecture for supporting RNs is shown in Figure 4.7.2-1. The RN terminates the S1, X2 and Un interfaces. The DeNB provides S1 and X2 proxy functionality between the RN and other network nodes (other eNBs, MMEs and S-GWs). The S1 and X2 proxy functionality includes passing UE-dedicated S1 and X2 signalling messages as well as GTP data packets between the S1 and X2 interfaces associated with the RN and the S1 and X2 interfaces associated with other network nodes. Due to the proxy functionality, the DeNB appears as an MME (for S1), an eNB (for X2) and an S-GW to the RN.

In phase II of RN operation, the DeNB also embeds and provides the S-GW/P-GW-like functions needed for the RN operation. This includes creating a session for the RN and managing EPS bearers for the RN, as well as terminating the S11 interface towards the MME serving the RN.

The RN and DeNB also perform mapping of signalling and data packets onto EPS bearers that are setup for the RN. The mapping is based on existing QoS mechanisms defined for the UE and the P-GW.

In phase II of RN operation, the P-GW functions in the DeNB allocate an IP address for the RN for the O&M which may be different than the S1 IP address of the DeNB.

If the RN address is not routable to the RN O&M domain, it shall be reachable from the RN O&M domain (e.g. via NAT).



Samsung Exhibit 1015, Page 29 of 198
Samsung Electronics Co., Ltd. v. Asus Technology Licensing Inc.
IPR2024-01217

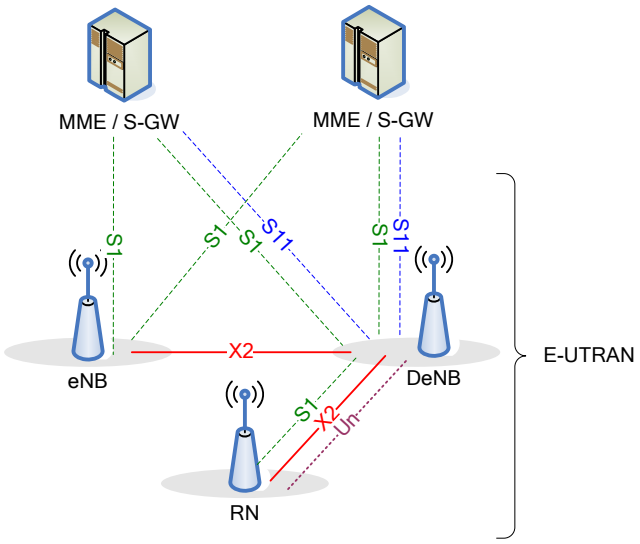


**Figure 4.7.2-1: Overall E-UTRAN Architecture supporting RNs**

## 4.7.3 S1 and X2 user plane aspects

The S1 user plane protocol stacks for supporting RNs are shown in Figure 4.7.3-1. There is a GTP tunnel associated with each UE EPS bearer, spanning from the S-GW associated with the UE to the DeNB, which is switched to another GTP tunnel in the DeNB, going from the DeNB to the RN (one-to-one mapping).

The X2 user plane protocol stacks for supporting RNs during inter-eNB handover are shown in Figure 4.7.3-2. There is a GTP forwarding tunnel associated with each UE EPS bearer subject to forwarding, spanning from the other eNB to the DeNB, which is switched to another GTP tunnel in the DeNB, going from the DeNB to the RN (one-to-one mapping).

The S1 and X2 user plane packets are mapped to radio bearers over the Un interface. The mapping can be based on the QCI associated with the UE EPS bearer. UE EPS bearer with similar QoS can be mapped to the same Un radio bearer.

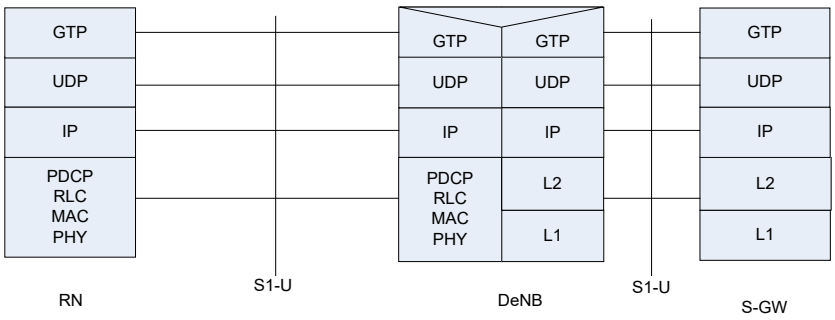


**Figure 4.7.3-1: S1 user plane protocol stack for supporting RNs**



Samsung Exhibit 1015, Page 30 of 198
Samsung Electronics Co., Ltd. v. Asus Technology Licensing Inc.
IPR2024-01217

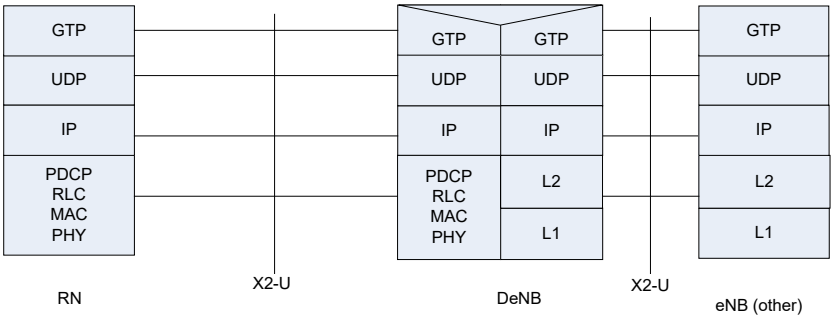


**Figure 4.7.3-2: X2 user plane protocol stack for supporting RNs**

## 4.7.4 S1 and X2 control plane aspects

The S1 control plane protocol stacks for supporting relaying are shown in 4.7.4-1. There is one S1 interface relation between the RN and the DeNB, and there is one S1 interface relation between the DeNB and each MME in the MME pool. The DeNB processes and forwards all S1 messages between the RN and the MMEs for all UE-dedicated procedures. The processing of S1-AP messages includes modifying S1-AP UE IDs, Transport Layer address and GTP TEIDs but leaves other parts of the message unchanged. All non-UE-dedicated procedures are handled locally between the RN and the DeNB, and between the DeNB and the MMEs. Upon reception of a PAGING message, the DeNB sends the PAGING message toward the RN(s) which support any tracking area(s) indicated in the List of TAIs. Upon reception of a S1 MME overload message, the DeNB sends the MME Overload message towards the RN(s), including in the message the identities of the affected CN node.

The X2 control plane protocol stacks for supporting relaying are shown in 4.7.4-2. There is one X2 interface relation between the RN and the DeNB, and there is one X2 interface relation between the DeNB and every other eNB that the DeNB has an X2 relationship with. The DeNB processes and forwards all X2 messages between the RN and other eNBs for all UE-dedicated procedures. The processing of X2-AP messages includes modifying X2-AP UE IDs, Transport Layer address and GTP TEIDs but leaves other parts of the message unchanged.

All non-UE-dedicated S1-AP X2-AP procedures are terminated at the DeNB, and handled locally between the RN and the DeNB, and between the DeNB and other eNBs. Upon reception of an S1 non-UE-dedicated message from a MME, the DeNB may trigger corresponding S1 non-UE-dedicated procedure(s) to the RN(s). If more than one RN are involved, the DeNB may wait and aggregate the response messages from all involved RNs before responding to the MME. Upon reception of an S1 non-UE-dedicated message from a RN, the DeNB may trigger associated S1 non-UE-dedicated procedure(s) to the MME(s). In case of the RESET procedure, the DeNB does not need to wait the response message(s) from the MME(s) or RN(s) before the DeNB responds with the RESET ACKNOWLEDGE message to the originating node. Upon reception of an X2 non cell related non-UE-associated message from RN or neighbour eNB, the DeNB may trigger associated non-UE-dedicated X2-AP procedure(s) to the neighbour eNB or RN(s). Upon reception of an X2 cell related non-UE-dedicated message from RN or neighbour eNB, the DeNB may pass associated information to the neighbour eNB or RN(s) based on the included cell information. If one or more RN(s) are involved, the DeNB may wait and aggregate the response messages from all involved nodes to respond to the originating node. Further, parallel Cell Activation procedures are not allowed on each X2 interface instance. The processing of Resource Status Reporting Initiation/ Resource Status Reporting messages includes modification of measurement ID.

The S1 and X2 interface signalling packets are mapped to radio bearers over the Un interface.



Samsung Exhibit 1015, Page 31 of 198
Samsung Electronics Co., Ltd. v. Asus Technology Licensing Inc.
IPR2024-01217

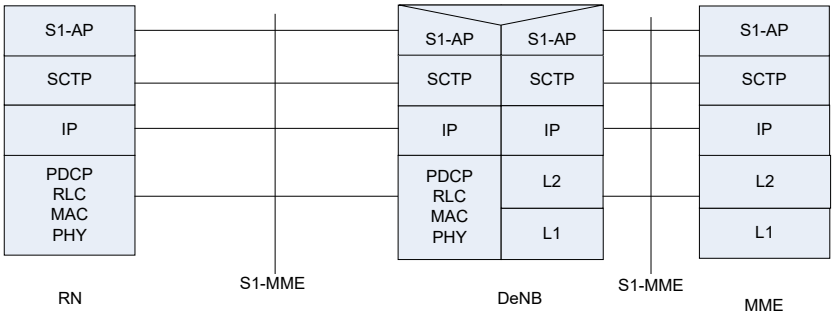


**Figure 4.7.4-1: S1 control plane protocol stack for supporting RNs**

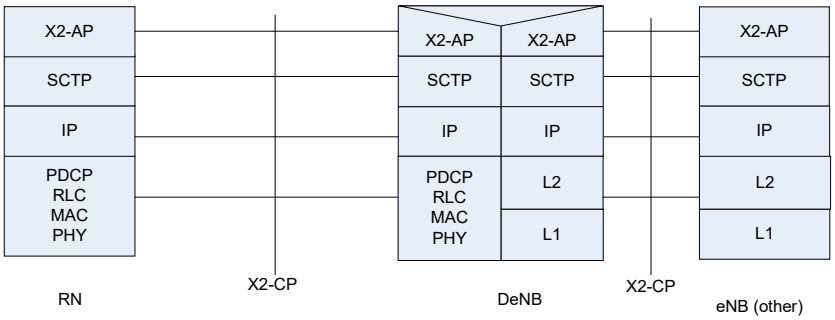


**Figure 4.7.4-2: X2 control plane protocol stack for supporting RNs**

## 4.7.5 Radio protocol aspects

The RN connects to the DeNB via the Un interface using the same radio protocols and procedures as a UE connecting to an eNB. The control plane protocol stack is shown in Figure 4.7.5-1 and the user plane protocol stack is shown in Figure 4.7.5-2.

The following relay-specific functionality is supported:

the RRC layer of the Un interface has functionality to configure and reconfigure specific subframe configurations (e.g. DL subframe configuration and RN-specific control and traffic channels) for transmissions between an RN and a DeNB. The RN may request such a configuration from the DeNB during the RRC connection establishment, and the DeNB may initiate the RRC signalling for such configuration. The RN applies the configuration immediately upon reception;

NOTE: The subframe configuration on the Un interface and the subframe configuration in the RN cell can be temporarily misaligned, i.e. a new subframe configuration can be applied earlier by the RN on Un than in the RN cell.

the RRC layer of the Un interface has functionality to send updated system information in a dedicated message to an RN with an RN subframe configuration. The RN applies the received system information immediately;

- the PDCP layer of the Un interface has functionality to provide integrity protection for the user plane. The integrity protection is configured per DRB.

To support PWS towards UEs, the RN receives the relevant information over S1. The RN should hence ignore DeNB system information relating to PWS.



Samsung Exhibit 1015, Page 32 of 198
Samsung Electronics Co., Ltd. v. Asus Technology Licensing Inc.
IPR2024-01217

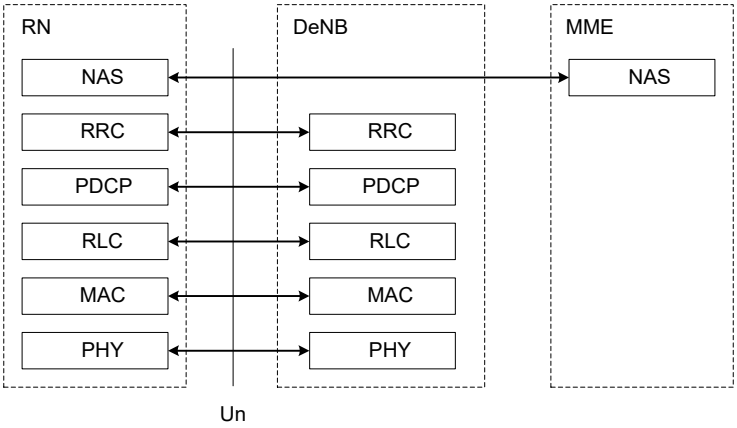


**Figure 4.7.5-1: Radio control plane protocol stack for supporting RNs**

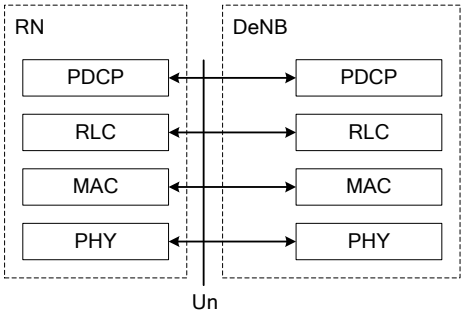


**Figure 4.7.5-2: User plane protocol stack for supporting RNs**

## 4.7.6 Signalling procedures

### 4.7.6.1 RN attach procedure

Figure 4.7.6.1-1 shows a simplified version of the attach procedure for the RN. The procedure is the same as the normal UE attach procedure [17] with the exception that:

- The DeNB has been made aware of which MME supports RN functionality via the S1 Setup Response message earlier received from the MMEs;
- The RN sends an RN indication to the DeNB during RRC connection establishment;
- After receiving the RN indication from the RN, the DeNB sends the RN indicator and the IP address of the S-GW/P-GW function embedded in the DeNB to an MME supporting RN functionality within the Initial UE Message;
- MME selects S-GW/P-GW for the RN based on the IP address included in the Initial UE Message;
- During the attach procedure, the EPC authenticates the RN as an RN; only if this authentication was successful, it accepts the Attach and set up a context with the DeNB.

The RN is preconfigured with information about which cells (DeNBs) it is allowed to access.



Samsung Exhibit 1015, Page 33 of 198
Samsung Electronics Co., Ltd. v. Asus Technology Licensing Inc.
IPR2024-01217

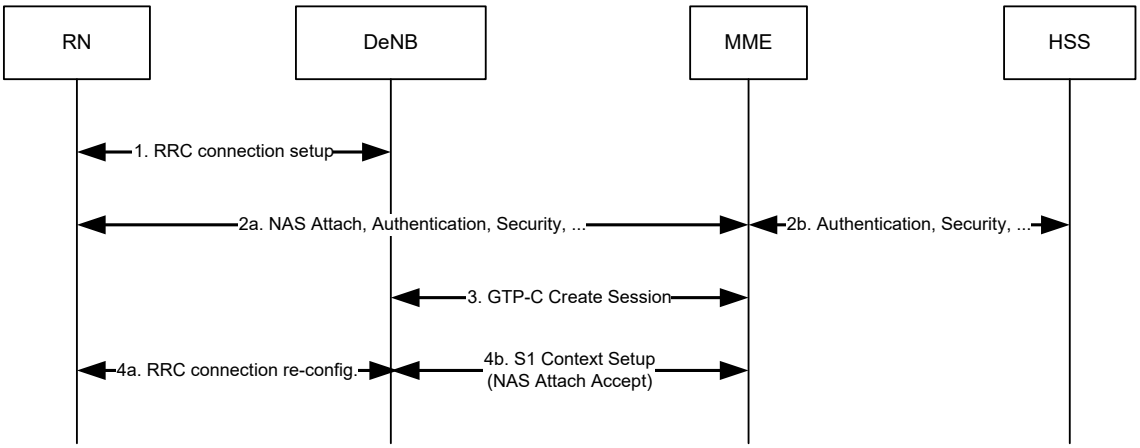


**Figure 4.7.6.1-1: RN attach procedure**

Editor's note: This signalling flow can be removed if captured in [17].

### 4.7.6.2 E-RAB activation/modification

Figure 4.7.6.2-1 shows a simplified version of the DeNB-initiated bearer activation/modification procedure. This procedure can be used by the DeNB to change the EPS bearer allocation for the RN. The procedure is the same as the normal network-initiated bearer activation/modification procedure [17] with the exception that the S-GW/P-GW functionality (steps 1 and 6) is performed by the DeNB.

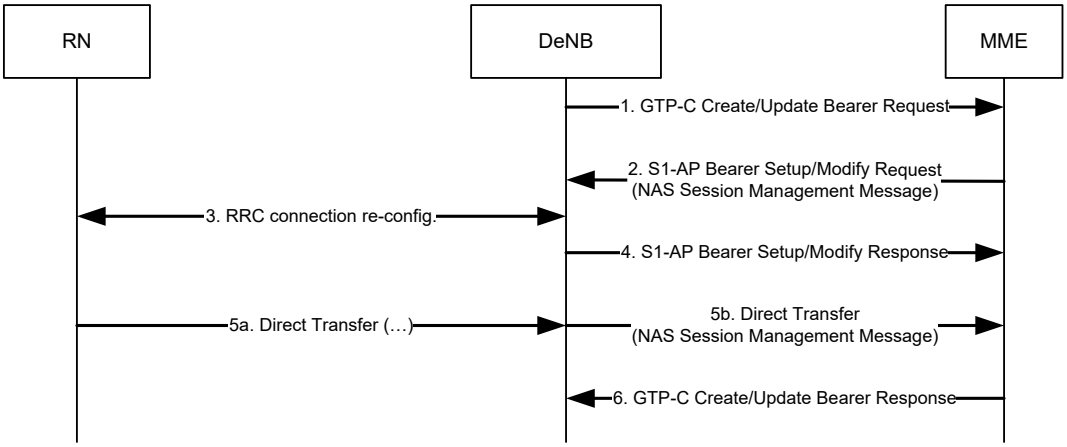


**Figure 4.7.6.2-1: DeNB-initiated bearer activation/modification procedure**

Editor's note: This signalling flow can be removed if captured in [17].

### 4.7.6.3 RN startup procedure

Figure 4.7.6.3-1 shows a simplified version of the startup procedure for the RN. The procedure is based on the normal UE attach procedure [17] and it consists of the following two phases:

I. Phase I: Attach for RN preconfiguration.
   The relay node attaches to the E-UTRAN/EPC as UE at power-up and retrieves initial configuration parameters, e.g. list of DeNB cells, from RN OAM. After this operation is complete, the relay node detaches from the



Samsung Exhibit 1015, Page 34 of 198
Samsung Electronics Co., Ltd. v. Asus Technology Licensing Inc.
IPR2024-01217

network as a UE and triggers Phase II. The MME performs the S-GW and P-GW selection for the RN as a normal UE.

II. Phase II: Attach for RN operation.
The relay node connects to a DeNB selected from the list acquired during Phase I to start relay operations. For this purpose, the normal RN attach procedure described in section 4.7.6.1 is applied. After the DeNB initiates setup of bearer for S1/X2, the RN initiates the setup of S1 and X2 associations with the DeNB (see section 4.7.4). In addition, the DeNB may initiate an RN reconfiguration procedure via RRC signalling for RN-specific parameters.
After the S1 setup, the DeNB performs the S1 eNB Configuration Update procedure(s), if the configuration data for the DeNB is updated due to the RN attach. After the X2 setup, the DeNB performs the X2 eNB Configuration Update procedure(s) to update the cell information.
In this phase the RN cells' ECGIs are configured by RN OAM.



Samsung Exhibit 1015, Page 35 of 198
Samsung Electronics Co., Ltd. v. Asus Technology Licensing Inc.
IPR2024-01217

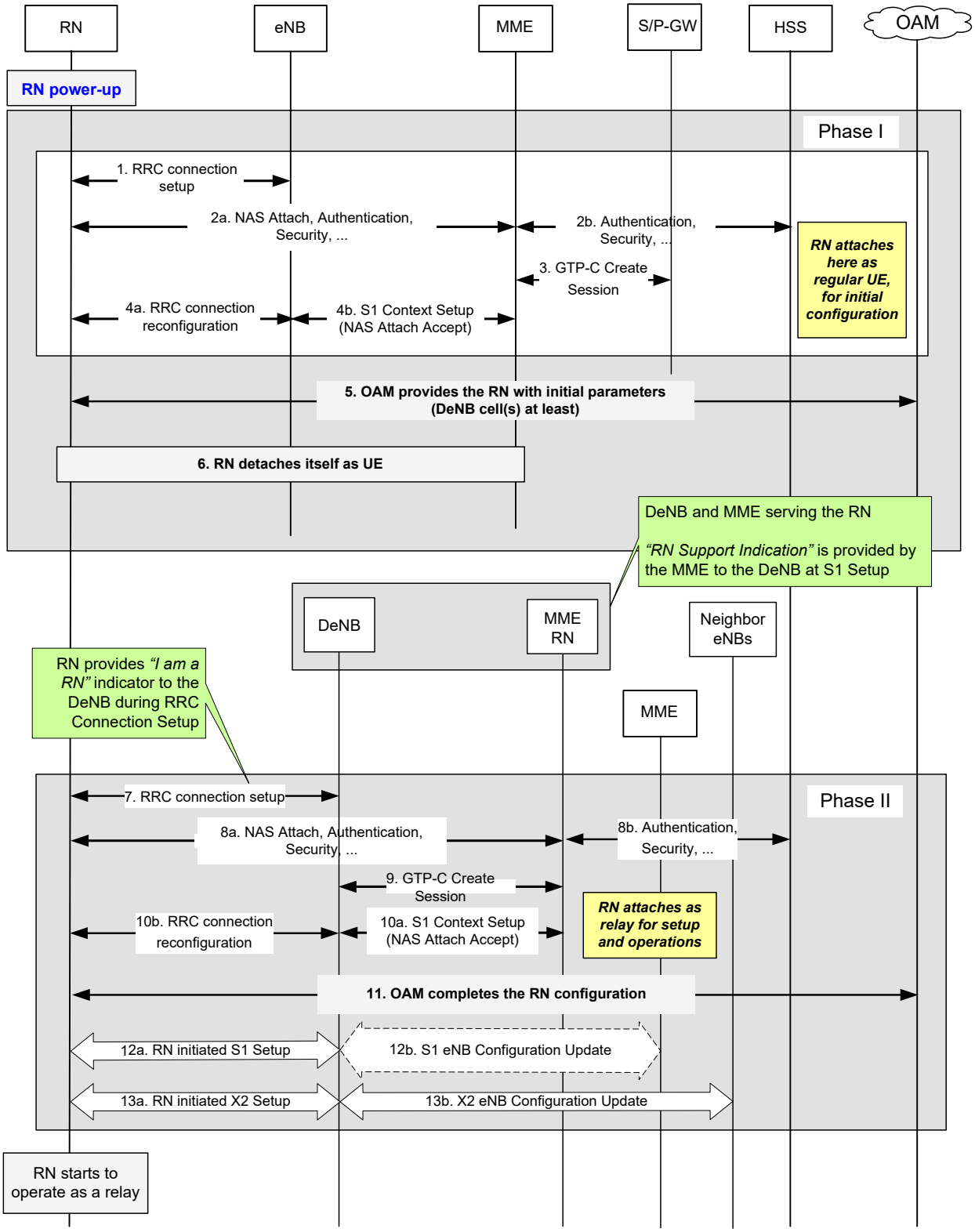


**Figure 4.7.6.3-1: RN Startup procedure**

### 4.7.6.4 RN detach procedure

Figure 4.7.6.4-1 shows a simplified version of the detach procedure for the RN operation in case no UE is connected to the RN cells.

1. The detach procedure is the same as the normal UE detach procedure [17].



Samsung Exhibit 1015, Page 36 of 198
Samsung Electronics Co., Ltd. v. Asus Technology Licensing Inc.
IPR2024-01217

2. The DeNB performs the X2 eNB Configuration Update procedure(s) to update the cell information.

3 The DeNB performs the S1 eNB Configuration Update procedure(s), if the configuration data for the DeNB is updated due to the RN detach.

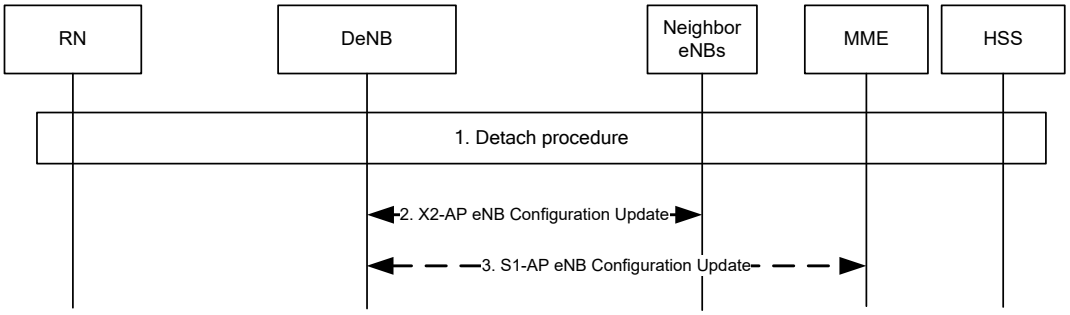


**Figure 4.7.6.4-1: RN detach procedure**

## 4.7.7 Relay Node OAM Aspects

### 4.7.7.1 Architecture

Each RN sends alarms and traffic counter information to its OAM system, from which it receives commands, configuration data and software downloads (e.g. for equipment software upgrades). This transport connection between each RN and its OAM, using IP, is provided by the DeNB by means of the Un interface; the reference architecture is shown in Figure 4.7.7.1-1. The secure connection between the RN and its OAM may be direct or hop-by-hop, i.e. involving intermediate hops trusted by the operator for this purpose.

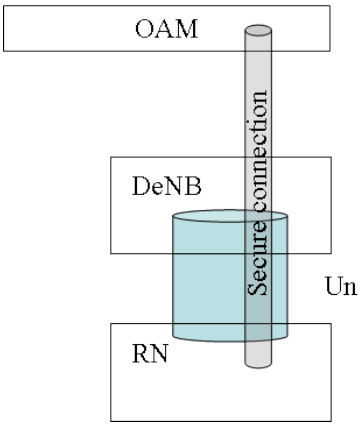


**Figure 4.7.7.1-1 Relay OAM architecture.**

It has to be noted that Figure 4.7.7.1-1 refers to normal operating conditions for the RN, i.e. after the initial start-up phase has been completed. The case where the secure connection between the RN and the OAM does not go through the DeNB, e.g. during the initial start-up phase, is not precluded.

### 4.7.7.2 OAM Traffic QoS Requirements

Alarms in the RN generate bursts of high-priority traffic, to be transported in real time. Traffic counters generate bursts of traffic, but their transport need not be real-time. Configuration messages from OAM to the RN will also generate small bursts of traffic, possibly with lower priority than alarms but still delay-sensitive: when a configuration is committed on the OAM, the time interval between the commitment and the effect on the equipment shall be small.

Alarm messages and commands should be transported on a high-priority bearer, while counters may be transported on a lower priority bearer. There is no need to specify a new QCI value other than those already standardized.



Samsung Exhibit 1015, Page 37 of 198
Samsung Electronics Co., Ltd. v. Asus Technology Licensing Inc.
IPR2024-01217

It is FFS whether alarm messages and commands shall be mapped over a dedicated bearer or if they shall be mapped over the same bearer that carries S1 and X2 messages between the RN and the DeNB.

OAM software download to the RN may generate larger amounts of data, but both the required data rate and the priority of this kind of traffic are much lower than in the case of alarms, commands and counters. It is FFS whether OAM software downloads shall be mapped to a dedicated, non-GBR bearer, or whether they should be transported together with the user plane traffic. If a dedicated bearer is used, it is FFS whether it shall be present at all times, or its setup should be event-triggered (software upgrades are triggered by the operator).

#### 4.7.7.3 Security Aspects

It is assumed that an end-to-end security mechanism for the OAM traffic connection is in place. It is FFS whether additional security requirements are needed for relays.

#### 4.7.7.4 General Considerations

RN OAM traffic is transported over the Un interface, and it shares resources with the UEs attached to the DeNB.

#### 4.7.7.5 OAM Requirements for Configuration Parameters

##### 4.7.7.5.1 Parameters Associated with Relay Bearer Mapping

OAM provides the appopriate support to configure a QCI-to-DSCP mapping function at the relay node which is used to control the mapping in uplink of Uu bearer(s) of different QCI(s) to Un bearer(s).

# 5 Physical Layer for E-UTRA

Downlink and uplink transmissions are organized into radio frames with 10 ms duration. Two radio frame structures are supported:

- Type 1, applicable to FDD,
- Type 2, applicable to TDD.

Frame structure Type 1 is illustrated in Figure 5.1-1. Each 10 ms radio frame is divided into ten equally sized sub-frames. Each sub-frame consists of two equally sized slots. For FDD, 10 subframes are available for downlink transmission and 10 subframes are available for uplink transmissions in each 10 ms interval. Uplink and downlink transmissions are separated in the frequency domain.

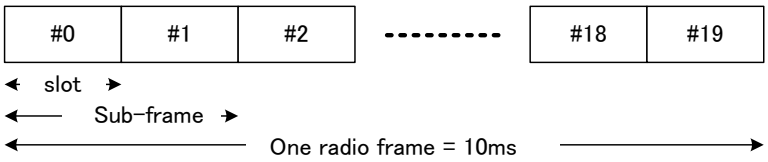


**Figure 5.1-1: Frame structure type 1**

Frame structure Type 2 is illustrated in Figure 5.1-2. Each 10 ms radio frame consists of two half-frames of 5 ms each. Each half-frame consists of eight slots of length 0.5 ms and three special fields: DwPTS, GP and UpPTS. The length of DwPTS and UpPTS is configurable subject to the total length of DwPTS, GP and UpPTS being equal to 1ms. Both 5ms and 10ms switch-point periodicity are supported. Subframe 1 in all configurations and subframe 6 in configuration with 5ms switch-point periodicity consist of DwPTS, GP and UpPTS. Subframe 6 in configuration with 10ms switch-point periodicity consists of DwPTS only. All other subframes consist of two equally sized slots.

For TDD, GP is reserved for downlink to uplink transition. Other Subframes/Fields are assigned for either downlink or uplink transmission. Uplink and downlink transmissions are separated in the time domain.



Samsung Exhibit 1015, Page 38 of 198
Samsung Electronics Co., Ltd. v. Asus Technology Licensing Inc.
IPR2024-01217

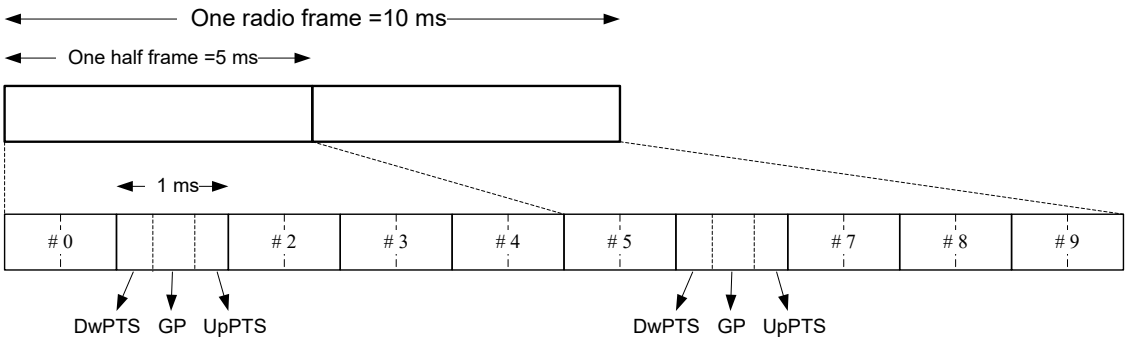


**Figure 5.1-2: Frame structure type 2 (for 5ms switch-point periodicity)**

**Table 5.1-1: Uplink-downlink allocations.**

| Configuration | Switch-point periodicity | Subframe number | | | | | | | | | |
|---|---|---|---|---|---|---|---|---|---|---|---|
| | | 0 | 1 | 2 | 3 | 4 | 5 | 6 | 7 | 8 | 9 |
| 0 | 5 ms | D | S | U | U | U | D | S | U | U | U |
| 1 | 5 ms | D | S | U | U | D | D | S | U | U | D |
| 2 | 5 ms | D | S | U | D | D | D | S | U | D | D |
| 3 | 10 ms | D | S | U | U | U | D | D | D | D | D |
| 4 | 10 ms | D | S | U | U | D | D | D | D | D | D |
| 5 | 10 ms | D | S | U | D | D | D | D | D | D | D |
| 6 | 5 ms | D | S | U | U | U | D | S | U | U | D |

The physical channels of E-UTRA are:

**Physical broadcast channel (PBCH)**

- The coded BCH transport block is mapped to four subframes within a 40 ms interval;
- 40 ms timing is blindly detected, i.e. there is no explicit signalling indicating 40 ms timing;
- Each subframe is assumed to be self-decodable, i.e. the BCH can be decoded from a single reception, assuming sufficiently good channel conditions.

**Physical control format indicator channel (PCFICH)**

- Informs the UE about the number of OFDM symbols used for the PDCCHs;
- Transmitted in every downlink or special subframe.

**Physical downlink control channel (PDCCH)**

- Informs the UE about the resource allocation of PCH and DL-SCH, and Hybrid ARQ information related to DL-SCH;
- Carries the uplink scheduling grant.

**Physical Hybrid ARQ Indicator Channel (PHICH)**

- Carries Hybrid ARQ ACK/NAKs in response to uplink transmissions.

**Physical downlink shared channel (PDSCH)**

- Carries the DL-SCH and PCH.

**Physical multicast channel (PMCH)**

- Carries the MCH.



Samsung Exhibit 1015, Page 39 of 198
Samsung Electronics Co., Ltd. v. Asus Technology Licensing Inc.
IPR2024-01217

**Physical uplink control channel (PUCCH)**

- Carries Hybrid ARQ ACK/NAKs in response to downlink transmission;
- Carries Scheduling Request (SR);
- Carries CQI reports.

**Physical uplink shared channel (PUSCH)**

- Carries the UL-SCH.

**Physical random access channel (PRACH)**

- Carries the random access preamble.

# 5.1 Downlink Transmission Scheme

## 5.1.1 Basic transmission scheme based on OFDM

The downlink transmission scheme is based on conventional OFDM using a cyclic prefix. The OFDM sub-carrier spacing is $\Delta f$ = 15 kHz. 12 consecutive sub-carriers during one slot correspond to one downlink *resource block*. In the frequency domain, the number of resource blocks, $N_{RB}$, can range from $N_{RB\text{-}min}$ = 6 to $N_{RB\text{-}max}$ = 110 per carrier or per CC in case of CA.

In addition there is also a reduced sub-carrier spacing$\Delta f_{low}$ = 7.5 kHz, only for MBMS-dedicated cell.

In the case of 15 kHz sub-carrier spacing there are two cyclic-prefix lengths, corresponding to seven and six OFDM symbols per slot respectively.

- Normal cyclic prefix: $T_{CP} = 160\times Ts$ (OFDM symbol #0) , $T_{CP} = 144\times Ts$ (OFDM symbol #1 to #6)
- Extended cyclic prefix: $T_{CP\text{-}e} = 512\times Ts$ (OFDM symbol #0 to OFDM symbol #5)

  where $T_s = 1/ (2048 \times \Delta f)$

In case of 7.5 kHz sub-carrier spacing, there is only a single cyclic prefix length $T_{CP\text{-}low} = 1024\times Ts$, corresponding to 3 OFDM symbols per slot.

In case of FDD, operation with half duplex from UE point of view is supported.

## 5.1.2 Physical-layer processing

The downlink physical-layer processing of transport channels consists of the following steps:

- CRC insertion: 24 bit CRC is the baseline for PDSCH;
- Channel coding: Turbo coding based on QPP inner interleaving with trellis termination;
- Physical-layer hybrid-ARQ processing;
- Channel interleaving;
- Scrambling: transport-channel specific scrambling on DL-SCH, BCH, and PCH. Common MCH scrambling for all cells involved in a specific MBSFN transmission;
- Modulation: QPSK, 16QAM, and 64QAM;
- Layer mapping and pre-coding;
- Mapping to assigned resources and antenna ports.



Samsung Exhibit 1015, Page 40 of 198
Samsung Electronics Co., Ltd. v. Asus Technology Licensing Inc.
IPR2024-01217

### 5.1.3 Physical downlink control channel

The downlink control signalling (PDCCH) is located in the first $n$ OFDM symbols where $n \leq 4$ and consists of:

- Transport format and resource allocation related to DL-SCH and PCH, and hybrid ARQ information related to DL-SCH;
- Transport format, resource allocation, and hybrid-ARQ information related to UL-SCH;

Transmission of control signalling from these groups is mutually independent.

Multiple physical downlink control channels are supported and a UE monitors a set of control channels.

Control channels are formed by aggregation of control channel elements, each control channel element consisting of a set of resource elements. Different code rates for the control channels are realized by aggregating different numbers of control channel elements.

QPSK modulation is used for all control channels.

Each separate control channel has its own set of x-RNTI.

There is an implicit relation between the uplink resources used for dynamically scheduled data transmission, or the DL control channel used for assignment, and the downlink ACK/NAK resource used for feedback

### 5.1.4 Downlink Reference signal

The downlink reference signals consist of known reference symbols inserted in the first and third last OFDM symbol of each slot. There is one reference signal transmitted per downlink antenna port. The number of downlink antenna ports equals 1, 2, or 4. The two-dimensional reference signal sequence is generated as the symbol-by-symbol product of a two-dimensional orthogonal sequence and a two-dimensional pseudo-random sequence. There are 3 different two-dimensional orthogonal sequences and 170 different two-dimensional pseudo-random sequences. Each cell identity corresponds to a unique combination of one orthogonal sequence and one pseudo-random sequence, thus allowing for 504 unique cell identities 168 cell identity groups with 3 cell identities in each group).

Frequency hopping can be applied to the downlink reference signals. The frequency hopping pattern has a period of one frame (10 ms). Each frequency hopping pattern corresponds to one cell identity group.

The downlink MBSFN reference signals consist of known reference symbols inserted every other sub-carrier in the 3rd, 7th and 11th OFDM symbol of sub-frame in case of 15kHz sub-carrier spacing and extended cyclic prefix

### 5.1.5 Downlink multi-antenna transmission

Multi-antenna transmission with 2 and 4 transmit antennas is supported. The maximum number of codeword is two irrespective to the number of antennas with fixed mapping between code words to layers.

Spatial division multiplexing (SDM) of multiple modulation symbol streams to a single UE using the same time-frequency (-code) resource, also referred to as Single-User MIMO (SU-MIMO) is supported. When a MIMO channel is solely assigned to a single UE, it is known as SU-MIMO. Spatial division multiplexing of modulation symbol streams to different UEs using the same time-frequency resource, also referred to as MU-MIMO, is also supported. There is semi-static switching between SU-MIMO and MU-MIMO per UE.

In addition, the following techniques are supported:

- Code-book-based pre-coding with a single pre-coding feedback per full system bandwidth when the system bandwidth (or subset of resource blocks) is smaller or equal to12RB and per 5 adjacent resource blocks or the full system bandwidth (or subset of resource blocks) when the system bandwidth is larger than 12RB.
- Rank adaptation with single rank feedback referring to full system bandwidth. Node B can override rank report.



Samsung Exhibit 1015, Page 41 of 198
Samsung Electronics Co., Ltd. v. Asus Technology Licensing Inc.
IPR2024-01217

### 5.1.6 MBSFN transmission

MBSFN is supported for the MCH transport channel. Multiplexing of transport channels using MBSFN and non-MBSFN transmission is done on a per-sub-frame basis. Additional reference symbols, transmitted using MBSFN are transmitted within MBSFN subframes.

### 5.1.7 Physical layer procedure

#### 5.1.7.1 Link adaptation

Link adaptation (AMC: adaptive modulation and coding) with various modulation schemes and channel coding rates is applied to the shared data channel. The same coding and modulation is applied to all groups of resource blocks belonging to the same L2 PDU scheduled to one user within one TTI and within a single stream.

#### 5.1.7.2 Power Control

Downlink power control can be used.

#### 5.1.7.3 Cell search

Cell search is the procedure by which a UE acquires time and frequency synchronization with a cell and detects the Cell ID of that cell. E-UTRA cell search supports a scalable overall transmission bandwidth corresponding to 72 sub-carriers and upwards.

E-UTRA cell search is based on following signals transmitted in the downlink: the primary and secondary synchronization signals, the downlink reference signals.

The primary and secondary synchronization signals are transmitted over the centre 72 sub-carriers in the first and sixth subframe of each frame.

Neighbour-cell search is based on the same downlink signals as initial cell search.

### 5.1.8 Physical layer measurements definition

The physical layer measurements to support mobility are classified as:

- within E-UTRAN (intra-frequency, inter-frequency);
- between E-UTRAN and GERAN/UTRAN (inter-RAT);
- between E-UTRAN and non-3GPP RAT (Inter 3GPP access system mobility).

For measurements within E-UTRAN at least two basic UE measurement quantities shall be supported:

- Reference symbol received power (RSRP);
- E-UTRA carrier received signal strength indicator (RSSI).

## 5.2 Uplink Transmission Scheme

### 5.2.1 Basic transmission scheme

For both FDD and TDD, the uplink transmission scheme is based on single-carrier FDMA, more specifically DFTS-OFDM.



Samsung Exhibit 1015, Page 42 of 198
Samsung Electronics Co., Ltd. v. Asus Technology Licensing Inc.
IPR2024-01217

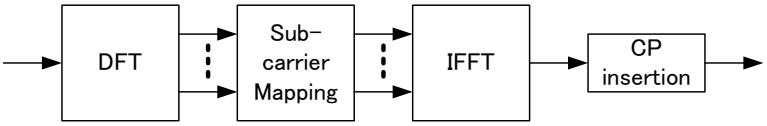


**Figure 5.2.1-1: Transmitter scheme of SC-FDMA**

The uplink sub-carrier spacing $\Delta f$ = 15 kHz. The sub-carriers are grouped into sets of 12 consecutive sub-carriers, corresponding to the uplink resource blocks. 12 consecutive sub-carriers during one slot correspond to one uplink *resource block*. In the frequency domain, the number of resource blocks, $N_{RB}$, can range from $N_{RB\text{-}min}$ = 6 to $N_{RB\text{-}max}$ = 110 per carrier or per CC in case of CA.

There are two cyclic-prefix lengths defined: Normal cyclic prefix and extended cyclic prefix corresponding to seven and six SC-FDMA symbol per slot respectively.

- Normal cyclic prefix: $T_{CP}$ = 160×Ts (SC-FDMA symbol #0) , $T_{CP}$ = 144×Ts (SC-FDMA symbol #1 to #6)
- Extended cyclic prefix: $T_{CP\text{-}e}$ = 512×Ts (SC-FDMA symbol #0 to SC-FDMA symbol #5)

## 5.2.2 Physical-layer processing

The uplink physical layer processing of transport channels consists of the following steps:

- CRC insertion: 24 bit CRC is the baseline for PUSCH;
- Channel coding: turbo coding based on QPP inner interleaving with trellis termination;
- Physical-layer hybrid-ARQ processing;
- Scrambling: UE-specific scrambling;
- Modulation: QPSK, 16QAM, and 64QAM (64 QAM optional in UE);
- Mapping to assigned resources and antennas ports.

## 5.2.3 Physical uplink control channel

The PUCCH shall be mapped to a control channel resource in the uplink. A control channel resource is defined by a code and two resource blocks, consecutive in time, with hopping at the slot boundary.

Depending on presence or absence of uplink timing synchronization, the uplink physical control signalling can differ.

In the case of time synchronization being present, the outband control signalling consists of:

- CQI;
- ACK/NAK;
- Scheduling Request (SR).

The CQI informs the scheduler about the current channel conditions as seen by the UE. If MIMO transmission is used, the CQI includes necessary MIMO-related feedback.

The HARQ feedback in response to downlink data transmission consists of a single ACK/NAK bit per HARQ process.

PUCCH resources for SR and CQI reporting are assigned and can be revoked through RRC signalling. An SR is not necessarily assigned to UEs acquiring synchronization through the RACH (i.e. synchronised UEs may or may not have a dedicated SR channel). PUCCH resources for SR and CQI are lost when the UE is no longer synchronized.



Samsung Exhibit 1015, Page 43 of 198
Samsung Electronics Co., Ltd. v. Asus Technology Licensing Inc.
IPR2024-01217

### 5.2.4 Uplink Reference signal

Uplink reference signals [for channel estimation for coherent demodulation] are transmitted in the 4-th block of the slot [*assumed normal CP*]. The uplink reference signals sequence length equals the size (number of sub-carriers) of the assigned resource.

The uplink reference signals are based on prime-length Zadoff-Chu sequences that are cyclically extended to the desired length.

Multiple reference signals can be created:

- Based on different Zadoff-Chu sequence from the same set of Zadoff-Chu sequences;
- Different shifts of the same sequence.

### 5.2.5 Random access preamble

The physical layer random access burst consists of a cyclic prefix, a preamble, and a guard time during which nothing is transmitted.

The random access preambles are generated from Zadoff-Chu sequences with zero correlation zone, ZC-ZCZ, generated from one or several root Zadoff-Chu sequences.

### 5.2.6 Uplink multi-antenna transmission

The baseline antenna configuration for uplink MIMO is MU-MIMO. To allow for MU-MIMO reception at the Node B, allocation of the same time and frequency resource to several UEs, each of which transmitting on a single antenna, is supported.

Closed loop type adaptive antenna selection transmit diversity shall be supported for FDD (optional in UE).

### 5.2.7 Physical channel procedure

#### 5.2.7.1 Link adaptation

Uplink link adaptation is used in order to guarantee the required minimum transmission performance of each UE such as the user data rate, packet error rate, and latency, while maximizing the system throughput.

Three types of link adaptation are performed according to the channel conditions, the UE capability such as the maximum transmission power and maximum transmission bandwidth etc., and the required QoS such as the data rate, latency, and packet error rate etc. Three link adaptation methods are as follows.

- Adaptive transmission bandwidth;
- Transmission power control;
- Adaptive modulation and channel coding rate.

#### 5.2.7.2 Uplink Power control

Intra-cell power control: the power spectral density of the uplink transmissions can be influenced by the eNB.

#### 5.2.7.3 Uplink timing control

The timing advance is derived from the UL received timing and sent by the eNB to the UE which the UE uses to advance/delay its timings of transmissions to the eNB so as to compensate for propagation delay and thus time align the transmissions from different UEs with the receiver window of the eNB.

The timing advance command is on a per need basis with a granularity in the step size of 0.52 μs ($16\times T_s$).



Samsung Exhibit 1015, Page 44 of 198
Samsung Electronics Co., Ltd. v. Asus Technology Licensing Inc.
IPR2024-01217

## 5.3 Transport Channels

The physical layer offers information transfer services to MAC and higher layers. The physical layer transport services are described by *how* and with what characteristics data are transferred over the radio interface. An adequate term for this is "Transport Channel".

NOTE: This should be clearly separated from the classification of *what* is transported, which relates to the concept of logical channels at MAC sublayer.

Downlink transport channel types are:

1. **Broadcast Channel (BCH)** characterised by:
   - fixed, pre-defined transport format;
   - requirement to be broadcast in the entire coverage area of the cell.
2. **Downlink Shared Channel (DL-SCH)** characterised by:
   - support for HARQ;
   - support for dynamic link adaptation by varying the modulation, coding and transmit power;
   - possibility to be broadcast in the entire cell;
   - possibility to use beamforming;
   - support for both dynamic and semi-static resource allocation;
   - support for UE discontinuous reception (DRX) to enable UE power saving;

NOTE: the possibility to use slow power control depends on the physical layer.

3. **Paging Channel (PCH)** characterised by:
   - support for UE discontinuous reception (DRX) to enable UE power saving (DRX cycle is indicated by the network to the UE);
   - requirement to be broadcast in the entire coverage area of the cell;
   - mapped to physical resources which can be used dynamically also for traffic/other control channels.
4. **Multicast Channel (MCH)** characterised by:
   - requirement to be broadcast in the entire coverage area of the cell;
   - support for MBSFN combining of MBMS transmission on multiple cells;
   - support for semi-static resource allocation e.g. with a time frame of a long cyclic prefix.

Uplink transport channel types are:

1. **Uplink Shared Channel (UL-SCH)** characterised by:
   - possibility to use beamforming; (likely no impact on specifications)
   - support for dynamic link adaptation by varying the transmit power and potentially modulation and coding;
   - support for HARQ;
   - support for both dynamic and semi-static resource allocation.

NOTE: the possibility to use uplink synchronisation and timing advance depend on the physical layer.

2. **Random Access Channel(s) (RACH)** characterised by:
   - limited control information;



Samsung Exhibit 1015, Page 45 of 198
Samsung Electronics Co., Ltd. v. Asus Technology Licensing Inc.
IPR2024-01217

- collision risk;

NOTE: the possibility to use open loop power control depends on the physical layer solution.

### 5.3.1 Mapping between transport channels and physical channels

The figures below depict the mapping between transport and physical channels:

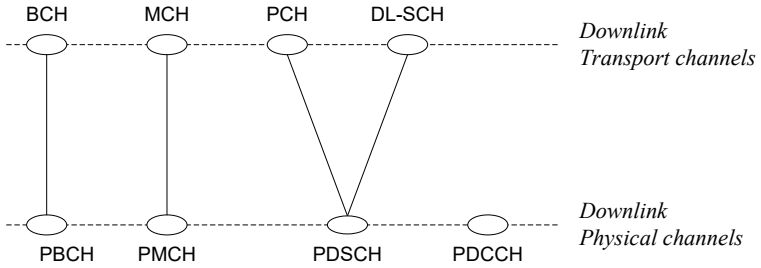


**Figure 5.3.1-1: Mapping between downlink transport channels and downlink physical channels**

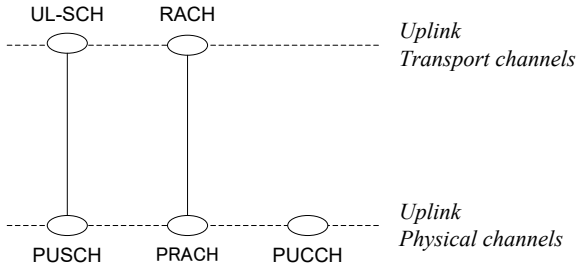


**Figure 5.3.1-2: Mapping between uplink transport channels and uplink physical channels**

## 5.4 E-UTRA physical layer model

The E-UTRAN physical layer model is captured in TS 36.302 [9].

### 5.4.1 Void

### 5.4.2 Void

## 5.5 Carrier Aggregation

In *Carrier Aggregation* (CA), two or more *component carriers* (CCs) are aggregated in order to support wider transmission bandwidths up to 100MHz. A UE may simultaneously receive or transmit on one or multiple CCs depending on its capabilities:

- A Rel-10 UE with reception and/or transmission capabilities for CA can simultaneously receive and/or transmit on multiple CCs corresponding to multiple serving cells;
- A Rel-8/9 UE can receive on a single CC and transmit on a single CC corresponding to one serving cell only.



Samsung Exhibit 1015, Page 46 of 198
Samsung Electronics Co., Ltd. v. Asus Technology Licensing Inc.
IPR2024-01217

CA is supported for both contiguous and non-contiguous CCs with each CC limited to a maximum of 110 Resource Blocks in the frequency domain using the Rel-8/9 numerology.

It is possible to configure a UE to aggregate a different number of CCs originating from the same eNB and of possibly different bandwidths in the UL and the DL.

- The number of DL CCs that can be configured depends on the DL aggregation capability of the UE;
- The number of UL CCs that can be configured depends on the UL aggregation capability of the UE;
- It is not possible to configure a UE with more UL CCs than DL CCs;
- In typical TDD deployments, the number of CCs and the bandwidth of each CC in UL and DL is the same.

CCs originating from the same eNB need not to provide the same coverage.

CCs shall be LTE Rel-8/9 compatible. Nevertheless, existing mechanisms (e.g. barring) may be used to avoid Rel-8/9 UEs to camp on a CC.

The spacing between centre frequencies of contiguously aggregated CCs shall be a multiple of 300 kHz. This is in order to be compatible with the 100 kHz frequency raster of Rel-8/9 and at the same time preserve orthogonality of the subcarriers with 15 kHz spacing. Depending on the aggregation scenario, the $n \times 300$ kHz spacing can be facilitated by insertion of a low number of unused subcarriers between contiguous CCs.

# 6 Layer 2

Layer 2 is split into the following sublayers: Medium Access Control (MAC), Radio Link Control (RLC) and Packet Data Convergence Protocol (PDCP).

This subclause gives a high level description of the Layer 2 sub-layers in terms of services and functions. The two figures below depict the PDCP/RLC/MAC architecture for downlink and uplink, where:

- Service Access Points (SAP) for peer-to-peer communication are marked with circles at the interface between sublayers. The SAP between the physical layer and the MAC sublayer provides the transport channels. The SAPs between the MAC sublayer and the RLC sublayer provide the logical channels.
- The multiplexing of several logical channels (i.e. radio bearers) on the same transport channel (i.e. transport block) is performed by the MAC sublayer;
- In both uplink and downlink, when CA is not configured, only one transport block is generated per TTI in the absence of spatial multiplexing.



Samsung Exhibit 1015, Page 47 of 198
Samsung Electronics Co., Ltd. v. Asus Technology Licensing Inc.
IPR2024-01217

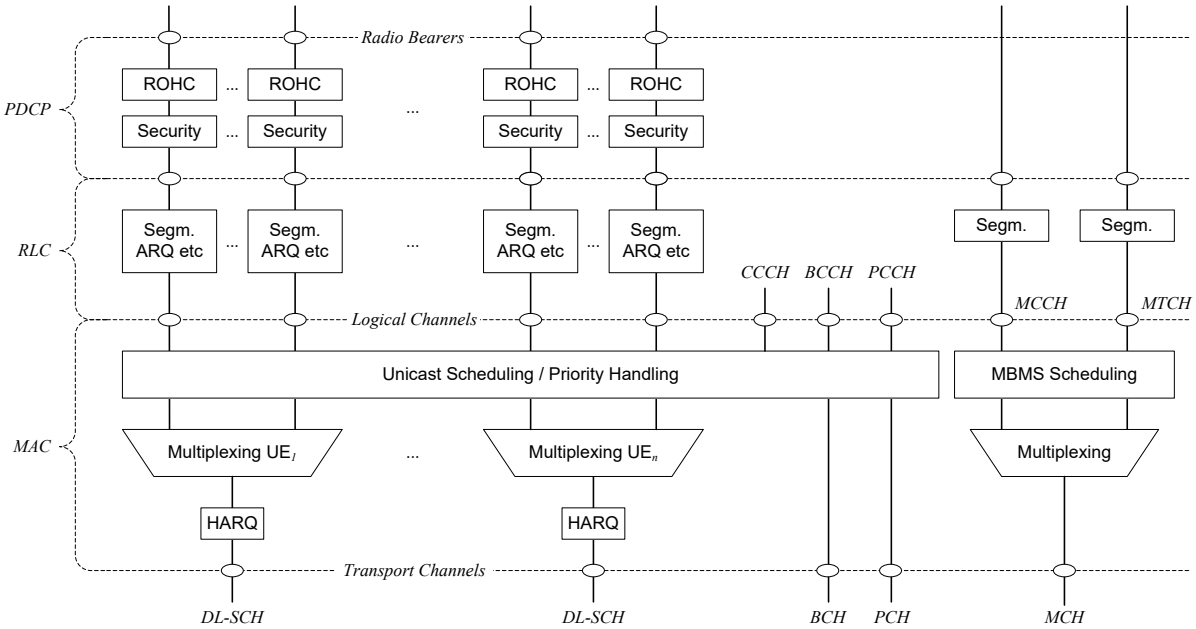


**Figure 6-1: Layer 2 Structure for DL**

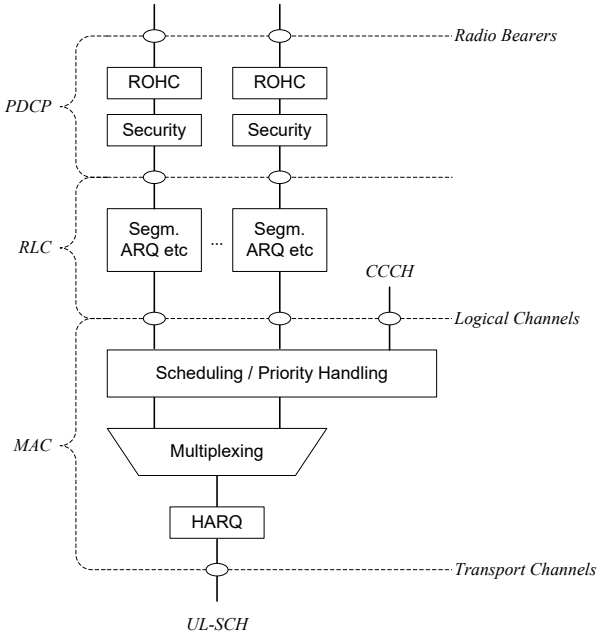


**Figure 6-2: Layer 2 Structure for UL**

NOTE: The eNB may not be able to guarantee that a L2 buffer overflow will never occur. If such overflow occurs, UE may discard packets in the L2 buffer.

## 6.1 MAC Sublayer

This subclause provides an overview on services and functions provided by the MAC sublayer.



Samsung Exhibit 1015, Page 48 of 198
Samsung Electronics Co., Ltd. v. Asus Technology Licensing Inc.
IPR2024-01217

### 6.1.1 Services and Functions

The main services and functions of the MAC sublayer include:

- Mapping between logical channels and transport channels;
- Multiplexing/demultiplexing of MAC SDUs belonging to one or different logical channels into/from transport blocks (TB) delivered to/from the physical layer on transport channels;
- scheduling information reporting;
- Error correction through HARQ;
- Priority handling between logical channels of one UE;
- Priority handling between UEs by means of dynamic scheduling;
- MBMS service identification;
- Transport format selection;
- Padding.

### 6.1.2 Logical Channels

Different kinds of data transfer services as offered by MAC. Each logical channel type is defined by what type of information is transferred.

A general classification of logical channels is into two groups:

- Control Channels (for the transfer of control plane information);
- Traffic Channels (for the transfer of user plane information).

There is one MAC entity per cell. MAC generally consists of several function blocks (transmission scheduling functions, per UE functions, MBMS functions, MAC control functions, transport block generation…). Transparent Mode is only applied to BCCH and PCCH.

#### 6.1.2.1 Control Channels

Control channels are used for transfer of control plane information only. The control channels offered by MAC are:

- **Broadcast Control Channel (BCCH)**

  A downlink channel for broadcasting system control information.

- **Paging Control Channel (PCCH)**

  A downlink channel that transfers paging information and system information change notifications. This channel is used for paging when the network does not know the location cell of the UE.

- **Common Control Channel (CCCH)**

  Channel for transmitting control information between UEs and network. This channel is used for UEs having no RRC connection with the network.

- **Multicast Control Channel (MCCH)**

  A point-to-multipoint downlink channel used for transmitting MBMS control information from the network to the UE, for one or several MTCHs. This channel is only used by UEs that receive MBMS.

- **Dedicated Control Channel (DCCH)**

  A point-to-point bi-directional channel that transmits dedicated control information between a UE and the network. Used by UEs having an RRC connection.



Samsung Exhibit 1015, Page 49 of 198
Samsung Electronics Co., Ltd. v. Asus Technology Licensing Inc.
IPR2024-01217

#### 6.1.2.2 Traffic Channels

Traffic channels are used for the transfer of user plane information only. The traffic channels offered by MAC are:

- **Dedicated Traffic Channel (DTCH)**

  A Dedicated Traffic Channel (DTCH) is a point-to-point channel, dedicated to one UE, for the transfer of user information. A DTCH can exist in both uplink and downlink.

- **Multicast Traffic Channel (MTCH)**

  A point-to-multipoint downlink channel for transmitting traffic data from the network to the UE. This channel is only used by UEs that receive MBMS.

### 6.1.3 Mapping between logical channels and transport channels

#### 6.1.3.1 Mapping in Uplink

The figure below depicts the mapping between uplink logical channels and uplink transport channels:

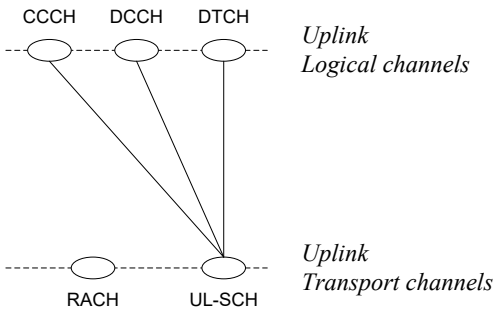


**Figure 6.1.3.1-1: Mapping between uplink logical channels and uplink transport channels**

In Uplink, the following connections between logical channels and transport channels exist:

- CCCH can be mapped to UL-SCH;
- DCCH can be mapped to UL- SCH;
- DTCH can be mapped to UL-SCH.

#### 6.1.3.2 Mapping in Downlink

The figure below depicts the mapping between downlink logical channels and downlink transport channels:

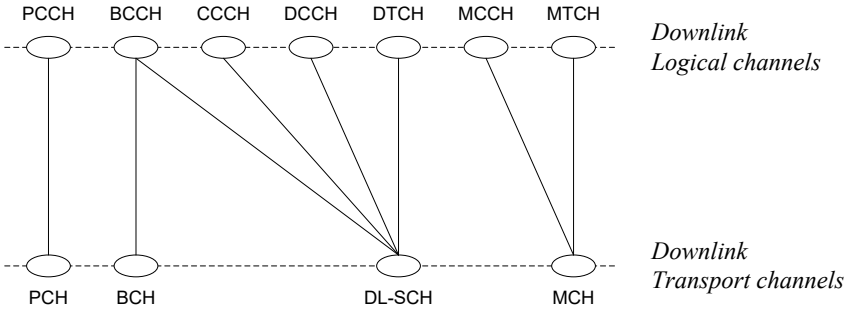


**Figure 6.1.3.2-1: Mapping between downlink logical channels and downlink transport channels**



Samsung Exhibit 1015, Page 50 of 198
Samsung Electronics Co., Ltd. v. Asus Technology Licensing Inc.
IPR2024-01217

In Downlink, the following connections between logical channels and transport channels exist:

- BCCH can be mapped to BCH;
- BCCH can be mapped to DL-SCH;
- PCCH can be mapped to PCH;
- CCCH can be mapped to DL-SCH;
- DCCH can be mapped to DL-SCH;
- DTCH can be mapped to DL-SCH;
- MTCH can be mapped to MCH;
- MCCH can be mapped to MCH.

# 6.2 RLC Sublayer

This subclause provides an overview on services, functions and PDU structure provided by the RLC sublayer. Note that:

- The reliability of RLC is configurable: some radio bearers may tolerate rare losses (e.g. TCP traffic);
- Radio Bearers are not characterized by a fixed sized data unit (e.g. a fixed sized RLC PDU).

## 6.2.1 Services and Functions

The main services and functions of the RLC sublayer include:

- Transfer of upper layer PDUs;
- Error Correction through ARQ (only for AM data transfer);
- Concatenation, segmentation and reassembly of RLC SDUs (only for UM and AM data transfer);
- Re-segmentation of RLC data PDUs (only for AM data transfer);
- Reordering of RLC data PDUs (only for UM and AM data transfer);
- Duplicate detection (only for UM and AM data transfer);
- Protocol error detection (only for AM data transfer);
- RLC SDU discard (only for UM and AM data transfer);
- RLC re-establishment.

## 6.2.2 PDU Structure

Figure 6.2.2-1 below depicts the RLC PDU structure where:

- The PDU sequence number carried by the RLC header is independent of the SDU sequence number (i.e. PDCP sequence number);
- A red dotted line indicates the occurrence of segmentation;
- Because segmentation only occurs when needed and concatenation is done in sequence, the content of an RLC PDU can generally be described by the following relations:
  - {0; 1} last segment of $SDU_i$ + [0; n] complete SDUs + {0; 1} first segment of $SDU_{i+n+1}$ ; or
  - 1 segment of $SDU_i$ .



Samsung Exhibit 1015, Page 51 of 198
Samsung Electronics Co., Ltd. v. Asus Technology Licensing Inc.
IPR2024-01217

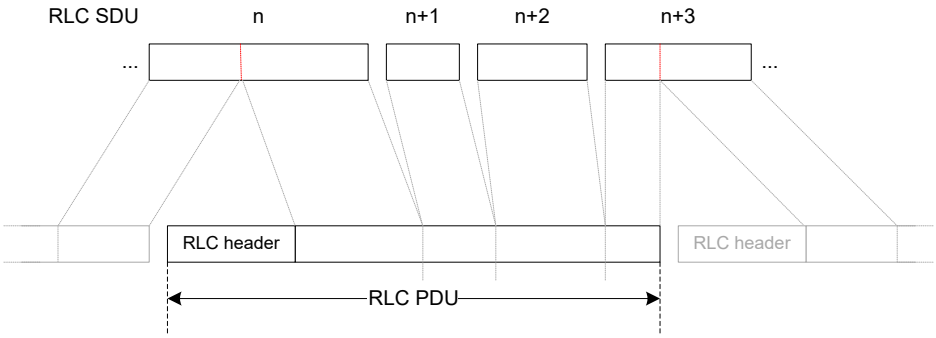


**Figure 6.2.2-1: RLC PDU Structure**

# 6.3 PDCP Sublayer

This subclause provides an overview on services, functions and PDU structure provided by the PDCP sublayer.

## 6.3.1 Services and Functions

The main services and functions of the PDCP sublayer for the user plane include:

- Header compression and decompression: ROHC only;
- Transfer of user data;
- In-sequence delivery of upper layer PDUs at PDCP re-establishment procedure for RLC AM;
- Duplicate detection of lower layer SDUs at PDCP re-establishment procedure for RLC AM;
- Retransmission of PDCP SDUs at handover for RLC AM;
- Ciphering and deciphering;
- Timer-based SDU discard in uplink.

NOTE: When compared to UTRAN, the *lossless DL RLC PDU size change* is not required.

The main services and functions of the PDCP for the control plane include:

- Ciphering and Integrity Protection;
- Transfer of control plane data.

## 6.3.2 PDU Structure

Figure 6.3.2-1 below depicts the PDCP PDU structure for user plane data, where:

- PDCP PDU and PDCP header are octet-aligned;
- PDCP header can be either 1 or 2 bytes long.



Samsung Exhibit 1015, Page 52 of 198
Samsung Electronics Co., Ltd. v. Asus Technology Licensing Inc.
IPR2024-01217

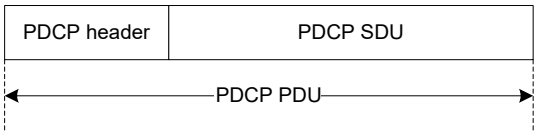


**Figure 6.3.2-1: PDCP PDU Structure**

The structures for control PDCP PDUs and for control plane PDCP data PDUs are specified in [15].

# 6.4 Carrier Aggregation

In case of CA, the multi-carrier nature of the physical layer is only exposed to the MAC layer for which one HARQ entity is required per serving cell;

- In both uplink and downlink, there is one independent hybrid-ARQ entity per serving cell and one transport block is generated per TTI per serving cell in the absence of spatial multiplexing. Each transport block and its potential HARQ retransmissions are mapped to a single serving cell.

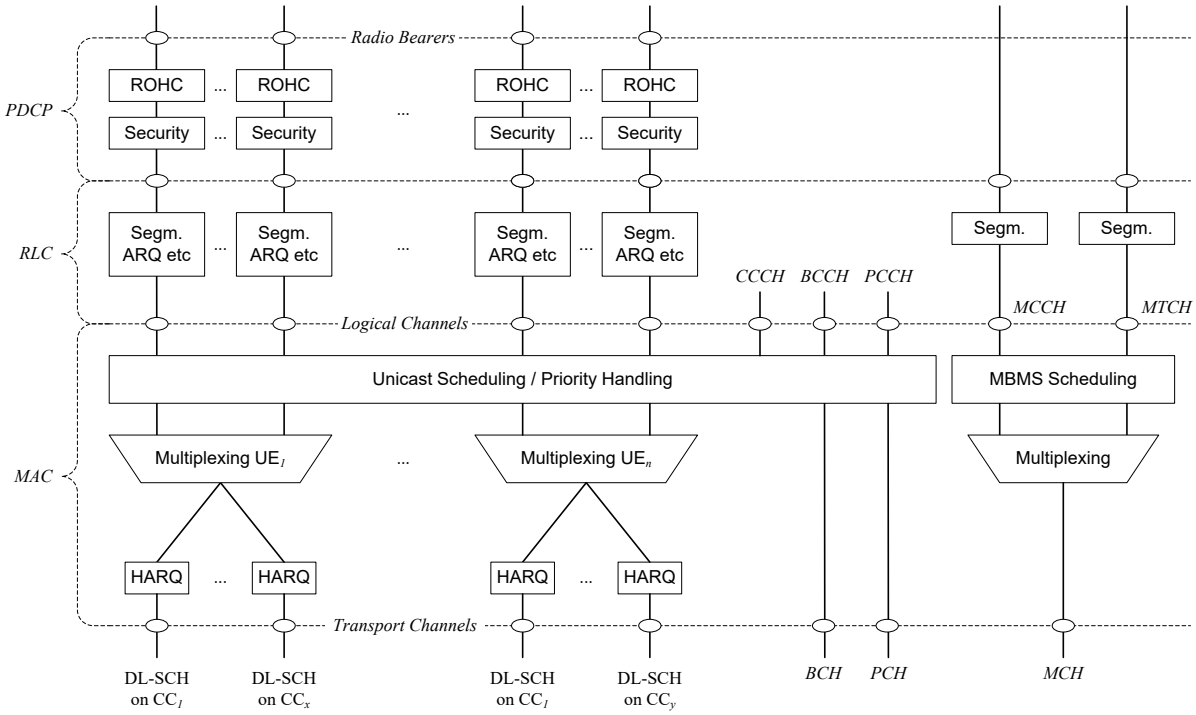


**Figure 6.4-1: Layer 2 Structure for DL with CA configured**



Samsung Exhibit 1015, Page 53 of 198
Samsung Electronics Co., Ltd. v. Asus Technology Licensing Inc.
IPR2024-01217

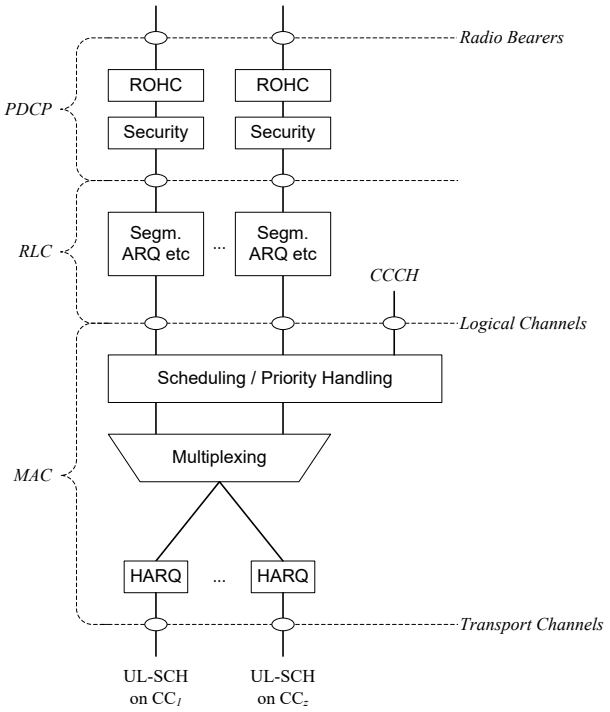


**Figure 6.4-2: Layer 2 Structure for UL with CA configured**

# 7 RRC

This subclause provides an overview on services and functions provided by the RRC sublayer.

## 7.1 Services and Functions

The main services and functions of the RRC sublayer include:

- Broadcast of System Information related to the non-access stratum (NAS);
- Broadcast of System Information related to the access stratum (AS);
- Paging;
- Establishment, maintenance and release of an RRC connection between the UE and E-UTRAN including:
  - Allocation of temporary identifiers between UE and E-UTRAN;
  - Configuration of signalling radio bearer(s) for RRC connection:
    - Low priority SRB and high priority SRB.
- Security functions including key management;
- Establishment, configuration, maintenance and release of point to point Radio Bearers;
- Mobility functions including:
  - UE measurement reporting and control of the reporting for inter-cell and inter-RAT mobility;
  - Handover;
  - UE cell selection and reselection and control of cell selection and reselection;



Samsung Exhibit 1015, Page 54 of 198
Samsung Electronics Co., Ltd. v. Asus Technology Licensing Inc.
IPR2024-01217

  - Context transfer at handover.
- Notification for MBMS services;
- Establishment, configuration, maintenance and release of Radio Bearers for MBMS services;
- QoS management functions;
- UE measurement reporting and control of the reporting;
- NAS direct message transfer to/from NAS from/to UE.

## 7.2 RRC protocol states & state transitions

RRC uses the following states:

- **RRC_IDLE**:
  - PLMN selection;
  - DRX configured by NAS;
  - Broadcast of system information;
  - Paging;
  - Cell re-selection mobility;
  - The UE shall have been allocated an id which uniquely identifies the UE in a tracking area;
  - No RRC context stored in the eNB.
- **RRC_CONNECTED**:
  - UE has an E-UTRAN-RRC connection;
  - UE has context in E-UTRAN;
  - E-UTRAN knows the cell which the UE belongs to;
  - Network can transmit and/or receive data to/from UE;
  - Network controlled mobility (handover and inter-RAT cell change order to GERAN with NACC);
  - Neighbour cell measurements;
  - At PDCP/RLC/MAC level:
    - UE can transmit and/or receive data to/from network;
    - UE monitors control signalling channel for shared data channel to see if any transmission over the shared data channel has been allocated to the UE;
    - UE also reports channel quality information and feedback information to eNB;
    - DRX period can be configured according to UE activity level for UE power saving and efficient resource utilization. This is under control of the eNB.

## 7.3 Transport of NAS messages

The AS provides reliable in-sequence delivery of NAS messages in a cell. During handover, message loss or duplication of NAS messages can occur.

In E-UTRAN, NAS messages are either concatenated with RRC messages or carried in RRC without concatenation. Upon arrival of concurrent NAS messages for the same UE requiring both concatenation with RRC for the high priority



Samsung Exhibit 1015, Page 55 of 198
Samsung Electronics Co., Ltd. v. Asus Technology Licensing Inc.
IPR2024-01217

queue and also without concatenation for the lower priority queue, the messages are first queued as necessary to maintain in-sequence delivery.

In DL, when an EPS bearer establishment or release procedure is triggered, the NAS message should normally be concatenated with the associated RRC message. When the EPS bearer is modified and when the modification also depends on a modification of the radio bearer, the NAS message and associated RRC message should normally be concatenated. Concatenation of DL NAS with RRC message is not allowed otherwise. In uplink concatenation of NAS messages with RRC message is used only for transferring the initial NAS message during connection setup. Initial Direct Transfer is not used in E-UTRAN and no NAS message is concatenated with RRC connection request.

Multiple NAS messages can be sent in a single downlink RRC message during EPS bearer establishment or modification. In this case, the order of the NAS messages in the RRC message shall be kept the same as that in the corresponding S1-AP message in order to ensure the in-sequence delivery of NAS messages.

NOTE: NAS messages are integrity protected and ciphered by PDCP, in addition to the integrity protection and ciphering performed by NAS.

# 7.4 System Information

System information is divided into the *MasterInformationBlock* (MIB) and a number of *SystemInformationBlocks* (SIBs):

- *MasterInformationBlock* defines the most essential physical layer information of the cell required to receive further system information;
- *SystemInformationBlockType1* contains information relevant when evaluating if a UE is allowed to access a cell and defines the scheduling of other system information blocks;
- *SystemInformationBlockType2* contains common and shared channel information;
- *SystemInformationBlockType3* contains cell re-selection information, mainly related to the serving cell;
- *SystemInformationBlockType4* contains information about the serving frequency and intra-frequency neighbouring cells relevant for cell re-selection (including cell re-selection parameters common for a frequency as well as cell specific re-selection parameters);
- *SystemInformationBlockType5* contains information about other E-UTRA frequencies and inter-frequency neighbouring cells relevant for cell re-selection (including cell re-selection parameters common for a frequency as well as cell specific re-selection parameters);
- *SystemInformationBlockType6* contains information about UTRA frequencies and UTRA neighbouring cells relevant for cell re-selection (including cell re-selection parameters common for a frequency as well as cell specific re-selection parameters);
- *SystemInformationBlockType7* contains information about GERAN frequencies relevant for cell re-selection (including cell re-selection parameters for each frequency);
- *SystemInformationBlockType8* contains information about CDMA2000 frequencies and CDMA2000 neighbouring cells relevant for cell re-selection (including cell re-selection parameters common for a frequency as well as cell specific re-selection parameters);
- *SystemInformationBlockType9* contains a home eNB identifier (HNBID);
- *SystemInformationBlockType10* contains an ETWS primary notification;
- *SystemInformationBlockType11* contains an ETWS secondary notification;
- *SystemInformationBlockType12* contains a CMAS warning notification;
- *SystemInformationBlockType13* contains MBMS-related information.

The MIB is mapped on the BCCH and carried on BCH while all other SI messages are mapped on the BCCH and dynamically carried on DL-SCH where they can be identified through the SI-RNTI (System Information RNTI). Both the MIB and *SystemInformationBlockType1* use a fixed schedule with a periodicity of 40 and 80 ms respectively while the scheduling of other SI messages is flexible and indicated by *SystemInformationBlockType1*.



Samsung Exhibit 1015, Page 56 of 198
Samsung Electronics Co., Ltd. v. Asus Technology Licensing Inc.
IPR2024-01217

The eNB may schedule DL-SCH transmissions concerning logical channels other than BCCH in the same subframe as used for BCCH. The minimum UE capability restricts the BCCH mapped to DL-SCH e.g. regarding the maximum rate.

The Paging message is used to inform UEs in RRC_IDLE and UEs in RRC_CONNECTED about a system information change.

System information may also be provided to the UE by means of dedicated signalling e.g. upon handover.

## 7.5 Carrier Aggregation

When CA is configured, the UE only has one RRC connection with the network. At RRC connection establishment/re-establishment/handover, one serving cell provides the NAS mobility information (e.g. TAI), and at RRC connection re-establishment/handover, one serving cell provides the security input. This cell is referred to as the Primary Cell (PCell). In the downlink, the carrier corresponding to the PCell is the Downlink Primary Component Carrier (DL PCC) while in the uplink it is the Uplink Primary Component Carrier (UL PCC).

Depending on UE capabilities, Secondary Cells (SCells) can be configured to form together with the PCell a set of serving cells. In the downlink, the carrier corresponding to an SCell is a Downlink Secondary Component Carrier (DL SCC) while in the uplink it is an Uplink Secondary Component Carrier (UL SCC).

The configured set of serving cells for a UE therefore always consists of one PCell and one or more SCells:

- For each SCell the usage of uplink resources by the UE in addition to the downlink ones is configurable (the number of DL SCCs configured is therefore always larger or equal to the number of UL SCCs and no SCell can be configured for usage of uplink resources only);
- From a UE viewpoint, each uplink resource only belongs to one serving cell;
- The number of serving cells that can be configured depends on the aggregation capability of the UE (see subclause 5.5);
- PCell can only be changed with handover procedure (i.e. with security key change and RACH procedure);
- PCell is used for transmission of PUCCH;
- Unlike SCells, PCell cannot be de-activated (see subclause 11.2);
- Re-establishment is triggered when PCell experiences RLF, not when SCells experience RLF;
- NAS information is taken from PCell.

The reconfiguration, addition and removal of SCells can be performed by RRC. At intra-LTE handover, RRC can also add, remove, or reconfigure SCells for usage with the target PCell. When adding a new SCell, dedicated RRC signalling is used for sending all required system information of the SCell i.e. while in connected mode, UEs need not acquire broadcasted system information directly from the SCells.

# 8 E-UTRAN identities

## 8.1 E-UTRAN related UE identities

The following E-UTRAN related UE identities are used at cell level:

- C-RNTI: unique identification used for identifying RRC Connection and scheduling;
- Semi-Persistent Scheduling C-RNTI: unique identification used for semi-persistent scheduling;
- Temporary C-RNTI: identification used for the random access procedure;
- TPC-PUSCH-RNTI: identification used for the power control of PUSCH;
- TPC-PUCCH-RNTI: identification used for the power control of PUCCH;



Samsung Exhibit 1015, Page 57 of 198
Samsung Electronics Co., Ltd. v. Asus Technology Licensing Inc.
IPR2024-01217

- Random value for contention resolution: during some transient states, the UE is temporarily identified with a random value used for contention resolution purposes.

## 8.2 Network entity related Identities

The following identities are used in E-UTRAN for identifying a specific network entity [25]:

- Globally Unique MME Identity (GUMMEI): used to identify MME globally. The GUMMEI is constructed from the PLMN identity the MME belongs to, the group identity of the MME group the MME belongs to and the MME code (MMEC) of the MME within the MME group.

NOTE: a UE in ECM-IDLE establishing an RRC connection has to provide the GUMMEI of its current MME to the eNB in order for the eNB to fetch the UE context from the MME. Within the S-TMSI, one field contains the code of the MME (MMEC) that allocated the S-TMSI. The code of MME is needed to ensure that the S-TMSI remains unique in a tracking area shared by multiple MMEs.

- E-UTRAN Cell Global Identifier (ECGI): used to identify cells globally. The ECGI is constructed from the PLMN identity the cell belongs to and the Cell Identity (CI) of the cell. The included PLMN is the one given by the first PLMN entry in SIB1, according to [16].
- eNB Identifier (eNB ID): used to identify eNBs within a PLMN. The eNB ID is contained within the CI of its cells.
- Global eNB ID: used to identify eNBs globally. The Global eNB ID is constructed from the PLMN identity the eNB belongs to and the eNB ID. The MCC and MNC are the same as included in the E-UTRAN Cell Global Identifier (ECGI).
  - The Global eNB ID of RN is the same as its serving DeNB.
- Tracking Area identity (TAI): used to identify tracking areas. The TAI is constructed from the PLMN identity the tracking area belongs to and the TAC (Tracking Area Code) of the Tracking Area.
- CSG identity (CSG ID): used to identify a CSG within a PLMN.
- EPS Bearer ID / E-RAB ID:
  - The value of the E-RAB ID used at S1 and X2 interfaces to identify an E-RAB allocated to the UE is the same as the EPS Bearer ID value used at the Uu interface to identify the associated EPS Bearer (and also used at the NAS layer as defined in [25]).

The following identities are broadcast in every E-UTRAN cell (SIB1): CI, TAC, CSG ID (if any) and one or more PLMN identities.

# 9 ARQ and HARQ

E-UTRAN provides ARQ and HARQ functionalities. The ARQ functionality provides error correction by retransmissions in acknowledged mode at Layer 2. The HARQ functionality ensures delivery between peer entities at Layer 1.

## 9.1 HARQ principles

The HARQ within the MAC sublayer has the following characteristics:

- N-process Stop-And-Wait;
- HARQ transmits and retransmits transport blocks;
- In the downlink:
  - Asynchronous adaptive HARQ;



Samsung Exhibit 1015, Page 58 of 198
Samsung Electronics Co., Ltd. v. Asus Technology Licensing Inc.
IPR2024-01217

  - Uplink ACK/NAKs in response to downlink (re)transmissions are sent on PUCCH or PUSCH;
  - PDCCH signals the HARQ process number and if it is a transmission or retransmission;
  - Retransmissions are always scheduled through PDCCH.
- In the uplink:
  - Synchronous HARQ;
  - Maximum number of retransmissions configured per UE (as opposed to per radio bearer);
  - Downlink ACK/NAKs in response to uplink (re)transmissions are sent on PHICH;
  - HARQ operation in uplink is governed by the following principles (summarized in Table 9.1-1):
    1) Regardless of the content of the HARQ feedback (ACK or NACK), when a PDCCH for the UE is correctly received, the UE follows what the PDCCH asks the UE to do i.e. perform a transmission or a retransmission (referred to as adaptive retransmission);
    2) When no PDCCH addressed to the C-RNTI of the UE is detected, the HARQ feedback dictates how the UE performs retransmissions:
      - NACK: the UE performs a non-adaptive retransmission i.e. a retransmission on the same uplink resource as previously used by the same process;
      - ACK: the UE does not perform any UL (re)transmission and keeps the data in the HARQ buffer. A PDCCH is then required to perform a retransmission i.e. a non-adaptive retransmission cannot follow.
- Measurement gaps are of higher priority than HARQ retransmissions: whenever an HARQ retransmission collides with a measurement gap, the HARQ retransmission does not take place.

**Table 9.1-1: UL HARQ Operation**

| HARQ feedback seen by the UE | PDCCH seen by the UE | UE behaviour |
|---|---|---|
| ACK or NACK | New Transmission | New transmission according to PDCCH |
| ACK or NACK | Retransmission | Retransmission according to PDCCH (adaptive retransmission) |
| ACK | None | No (re)transmission, keep data in HARQ buffer and a PDDCH is required to resume retransmissions |
| NACK | None | Non-adaptive retransmission |

## 9.2 ARQ principles

The ARQ within the RLC sublayer has the following characteristics:

- ARQ retransmits RLC PDUs or RLC PDU segments based on RLC status reports;
- Polling for RLC status report is used when needed by RLC;
- RLC receiver can also trigger RLC status report after detecting a missing RLC PDU or RLC PDU segment.



Samsung Exhibit 1015, Page 59 of 198
Samsung Electronics Co., Ltd. v. Asus Technology Licensing Inc.
IPR2024-01217

## 9.3 Void

# 10 Mobility

Load balancing is achieved in E-UTRAN with redirection mechanisms (upon RRC establishment, in RRC_CONNECTED and upon RRC release) and through the usage of inter-frequency and inter-RAT absolute priorities and inter-frequency Qoffset parameters.

Measurements to be performed by a UE for mobility are classified in at least three measurement types:

- Intra-frequency E-UTRAN measurements;
- Inter-frequency E-UTRAN measurements;
- Inter-RAT measurements for UTRAN and GERAN;
- Inter-RAT measurements of CDMA2000 HRPD or 1xRTT frequencies.

For each measurement type one or several measurement objects can be defined (a measurement object defines e.g. the carrier frequency to be monitored).

For each measurement object one or several reporting configurations can be defined (a reporting configuration defines the reporting criteria). Three reporting criteria are used: event triggered reporting, periodic reporting and event triggered periodic reporting.

The association between a measurement object and a reporting configuration is created by a measurement identity (a measurement identity links together one measurement object and one reporting configuration of same RAT). By using several measurement identities (one for each measurement object, reporting configuration pair) it is possible:

- To associate several reporting configurations to one measurement object and;
- To associate one reporting configuration to several measurement objects.

The measurements identity is as well used when reporting results of the measurements.

Measurement quantities are considered separately for each RAT.

Measurement commands are used by E-UTRAN to order the UE to start measurements, modify measurements or stop measurements.

## 10.1 Intra E-UTRAN

In E-UTRAN RRC_CONNECTED state, network-controlled UE-assisted handovers are performed and various DRX cycles are supported.

In E-UTRAN RRC_IDLE state, cell reselections are performed and DRX is supported.

### 10.1.1 Mobility Management in ECM-IDLE

#### 10.1.1.1 Cell selection

The principles of PLMN selection in E-UTRA are based on the 3GPP PLMN selection principles. Cell selection is required on transition from EMM_DETACHED to EMM-REGISTERED and from ECM-IDLE or ECM-CONNECTED.

Cell selection:

- The UE NAS identifies a selected PLMN and equivalent PLMNs;
- The UE searches the E-UTRA frequency bands and for each carrier frequency identifies the strongest cell. It reads cell system information broadcast to identify its PLMN(s):



Samsung Exhibit 1015, Page 60 of 198
Samsung Electronics Co., Ltd. v. Asus Technology Licensing Inc.
IPR2024-01217

  - The UE may search each carrier in turn ("initial cell selection") or make use of stored information to shorten the search ("stored information cell selection").

- The UE seeks to identify a suitable cell; if it is not able to identify a suitable cell it seeks to identify an acceptable cell. When a suitable cell is found or if only an acceptable cell is found it camps on that cell and commence the cell reselection procedure:

  - A suitable cell is one for which the measured cell attributes satisfy the cell selection criteria; the cell PLMN is the selected PLMN, registered or an equivalent PLMN; the cell is not barred or reserved and the cell is not part of a tracking area which is in the list of "forbidden tracking areas for roaming";

  - An acceptable cell is one for which the measured cell attributes satisfy the cell selection criteria and the cell is not barred;

Transition to RRC_IDLE:

On transition from RRC_CONNECTED to RRC_IDLE, a UE should camp on the last cell for which it was in RRC_CONNECTED or a cell/any cell of set of cells or frequency be assigned by RRC in the state transition message.

Recovery from out of coverage:

The UE should attempt to find a suitable cell in the manner described for stored information or initial cell selection above. If no suitable cell is found on any frequency or RAT the UE should attempt to find an acceptable cell.

#### 10.1.1.2 Cell reselection

UE in RRC_IDLE performs cell reselection. The principles of the procedure are the following:

- The UE makes measurements of attributes of the serving and neighbour cells to enable the reselection process:

  - There is no need to indicate neighbouring cell in the serving cell system information to enable the UE to search and measure a cell i.e. E-UTRAN relies on the UE to detect the neighbouring cells;

  - For the search and measurement of inter-frequency neighbouring cells, only the carrier frequencies need to be indicated;

  - Measurements may be omitted if the serving cell attribute fulfils particular search or measurement criteria.

- Cell reselection identifies the cell that the UE should camp on. It is based on cell reselection criteria which involves measurements of the serving and neighbour cells:

  - Intra-frequency reselection is based on ranking of cells;

  - Inter-frequency reselection is based on absolute priorities where UE tries to camp on highest priority frequency available. Absolute priorities for reselection are provided only by the RPLMN and valid only within the RPLMN; priorities are given by the system information and valid for all UEs in a cell, specific priorities per UE can be signalled in the RRC Connection Release message. A validity time can be associated with UE specific priorities.

  - For inter-frequency neighbouring cells, it is possible to indicate layer-specific cell reselection parameters (e.g., layer specific offset). These parameters are common to all neighbouring cells on a frequency;

  - An NCL can be provided by the serving cell to handle specific cases for intra- and inter-frequency neighbouring cells. This NCL contains cell specific cell reselection parameters (e.g., cell specific offset) for specific neighbouring cells;

  - Black lists can be provided to prevent the UE from reselecting to specific intra- and inter-frequency neighbouring cells;

  - Cell reselection can be speed dependent (speed detection based on UTRAN solution);

  - Cell reselection parameters are applicable for all UEs in a cell, but it is possible to configure specific reselection parameters per UE group or per UE.



Samsung Exhibit 1015, Page 61 of 198
Samsung Electronics Co., Ltd. v. Asus Technology Licensing Inc.
IPR2024-01217

Cell access restrictions apply as for UTRAN, which consist of access class (AC) barring and cell reservation (e.g. for cells "reserved for operator use") applicable for mobiles in RRC_IDLE mode.

#### 10.1.1.3 Void

#### 10.1.1.4 Void

#### 10.1.1.5 Void

### 10.1.2 Mobility Management in ECM-CONNECTED

The Intra-E-UTRAN-Access Mobility Support for UEs in ECM-CONNECTED handles all necessary steps for relocation/handover procedures, like processes that precede the final HO decision on the source network side (control and evaluation of UE and eNB measurements taking into account certain UE specific area restrictions), preparation of resources on the target network side, commanding the UE to the new radio resources and finally releasing resources on the (old) source network side. It contains mechanisms to transfer context data between evolved nodes, and to update node relations on C-plane and U-plane.

In E-UTRAN RRC_CONNECTED state, network-controlled UE-assisted handovers are performed and various DRX cycles are supported:

The UE makes measurements of attributes of the serving and neighbour cells to enable the process:

- There is no need to indicate neighbouring cell to enable the UE to search and measure a cell i.e. E-UTRAN relies on the UE to detect the neighbouring cells;
- For the search and measurement of inter-frequency neighbouring cells, at least the carrier frequencies need to be indicated;
- Network signals reporting criteria for event-triggered and periodical reporting;
- An NCL can be provided by the serving cell by RRC dedicated signalling to handle specific cases for intra- and inter-frequency neighbouring cells. This NCL contains cell specific measurement parameters (e.g. cell specific offset) for specific neighbouring cells;
- Black lists can be provided to prevent the UE from measuring specific neighbouring cells.

Depending on whether the UE needs transmission/reception gaps to perform the relevant measurements, measurements are classified as gap assisted or non-gap assisted. A non-gap assisted measurement is a measurement on a cell that does not require transmission/reception gaps to allow the measurement to be performed. A gap assisted measurement is a measurement on a cell that does require transmission/reception gaps to allow the measurement to be performed. Gap patterns (as opposed to individual gaps) are configured and activated by RRC.

#### 10.1.2.1 Handover

The intra E-UTRAN HO in RRC_CONNECTED state is UE assisted NW controlled HO, with HO preparation signalling in E-UTRAN:

- Part of the HO command comes from the target eNB and is transparently forwarded to the UE by the source eNB;
- To prepare the HO, the source eNB passes all necessary information to the target eNB (e.g. E-RAB attributes and RRC context):
  - When CA is configured and to enable SCell selection in the target eNB, the source eNB can provide in decreasing order of radio quality a list of the best cells and optionally measurement result of the cells.
- Both the source eNB and UE keep some context (e.g. C-RNTI) to enable the return of the UE in case of HO failure;
- UE accesses the target cell via RACH following a contention-free procedure using a dedicated RACH preamble or following a contention-based procedure if dedicated RACH preambles are not available:



Samsung Exhibit 1015, Page 62 of 198
Samsung Electronics Co., Ltd. v. Asus Technology Licensing Inc.
IPR2024-01217

  - the UE uses the dedicated preamble until the handover procedure is finished (successfully or unsuccessfully);

- If the RACH procedure towards the target cell is not successful within a certain time, the UE initiates radio link failure recovery using the best cell;

- No ROHC context is transferred at handover.

#### 10.1.2.1.1 C-plane handling

The HO procedure is performed without EPC involvement, i.e. preparation messages are directly exchanged between the eNBs. The release of the resources at the source side during the HO completion phase is triggered by the eNB. In case an RN is involved, its DeNB relays the appropriate S1 messages between the RN and the MME (S1-based handover) and X2 messages between the RN and target eNB (X2-based handover); the DeNB is explicitly aware of a UE attached to the RN due to the S1 proxy and X2 proxy functionality. The figure below depicts the basic handover scenario where neither MME nor Serving Gateway changes:



Samsung Exhibit 1015, Page 63 of 198
Samsung Electronics Co., Ltd. v. Asus Technology Licensing Inc.
IPR2024-01217

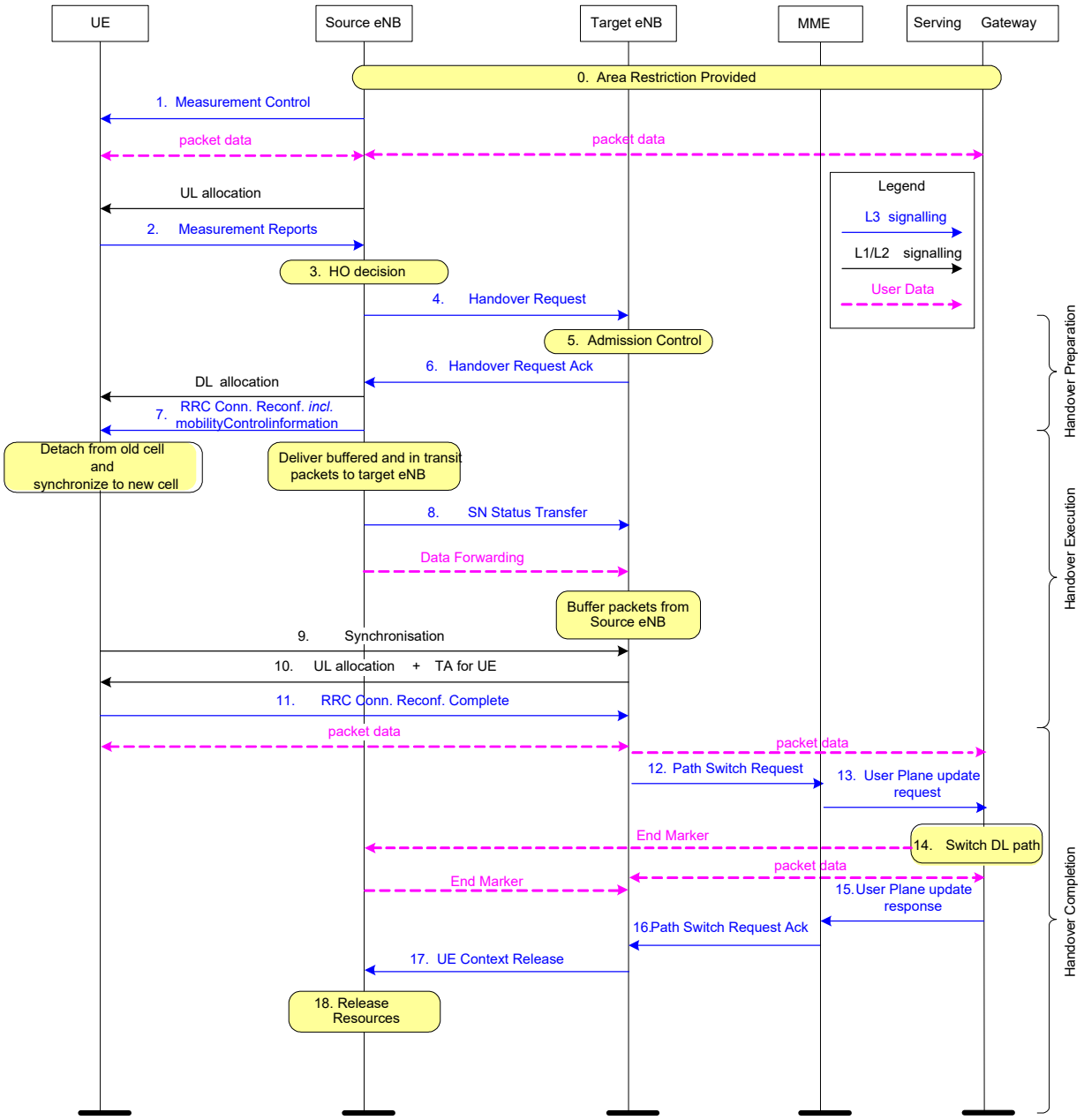


**Figure 10.1.2.1.1-1: Intra-MME/Serving Gateway HO**

Below is a more detailed description of the intra-MME/Serving Gateway HO procedure:

0 The UE context within the source eNB contains information regarding roaming restrictions which where provided either at connection establishment or at the last TA update.

1 The source eNB configures the UE measurement procedures according to the area restriction information. Measurements provided by the source eNB may assist the function controlling the UE's connection mobility.

2 UE is triggered to send MEASUREMENT REPORT by the rules set by i.e. system information, specification etc.



Samsung Exhibit 1015, Page 64 of 198
Samsung Electronics Co., Ltd. v. Asus Technology Licensing Inc.
IPR2024-01217

3 Source eNB makes decision based on MEASUREMENT REPORT and RRM information to hand off UE.

4 The source eNB issues a HANDOVER REQUEST message to the target eNB passing necessary information to prepare the HO at the target side (UE X2 signalling context reference at source eNB, UE S1 EPC signalling context reference, target cell ID, $K_{eNB*}$, RRC context including the C-RNTI of the UE in the source eNB, AS-configuration, E-RAB context and physical layer ID of the source cell + MAC for possible RLF recovery). UE X2 / UE S1 signalling references enable the target eNB to address the source eNB and the EPC. The E-RAB context includes necessary RNL and TNL addressing information, and QoS profiles of the E-RABs.

In the case of a UE under an RN performing handover, the HANDOVER REQUEST is received by the DeNB, which reads the target cell ID from the message, finds the target eNB corresponding to the target cell ID, and forwards the X2 message toward the target eNB.

In the case of a UE performing handover toward an RN, the HANDOVER REQUEST is received by the DeNB, which reads the target cell ID from the message, finds the target RN corresponding to the target cell ID, and forwards the X2 message toward the target RN.

5 Admission Control may be performed by the target eNB dependent on the received E-RAB QoS information to increase the likelihood of a successful HO, if the resources can be granted by target eNB. The target eNB configures the required resources according to the received E-RAB QoS information and reserves a C-RNTI and optionally a RACH preamble. The AS-configuration to be used in the target cell can either be specified independently (i.e. an "establishment") or as a delta compared to the AS-configuration used in the source cell (i.e. a "reconfiguration").

6 Target eNB prepares HO with L1/L2 and sends the HANDOVER REQUEST ACKNOWLEDGE to the source eNB. The HANDOVER REQUEST ACKNOWLEDGE message includes a transparent container to be sent to the UE as an RRC message to perform the handover. The container includes a new C-RNTI, target eNB security algorithm identifiers for the selected security algorithms, may include a dedicated RACH preamble, and possibly some other parameters i.e. access parameters, SIBs, etc. The HANDOVER REQUEST ACKNOWLEDGE message may also include RNL/TNL information for the forwarding tunnels, if necessary.

NOTE: As soon as the source eNB receives the HANDOVER REQUEST ACKNOWLEDGE, or as soon as the transmission of the handover command is initiated in the downlink, data forwarding may be initiated.

Steps 7 to 16 provide means to avoid data loss during HO and are further detailed in 10.1.2.1.2 and 10.1.2.3.

7 The target eNB generates the RRC message to perform the handover, i.e *RRCConnectionReconfiguration* message including the *mobilityControlInformation*, to be sent by the source eNB towards the UE. The source eNB performs the necessary integrity protection and ciphering of the message. The UE receives the *RRCConnectionReconfiguration* message with necessary parameters (i.e. new C-RNTI, target eNB security algorithm identifiers, and optionally dedicated RACH preamble, target eNB SIBs, etc.) and is commanded by the source eNB to perform the HO. The UE does not need to delay the handover execution for delivering the HARQ/ARQ responses to source eNB.

8 The source eNB sends the SN STATUS TRANSFER message to the target eNB to convey the uplink PDCP SN receiver status and the downlink PDCP SN transmitter status of E-RABs for which PDCP status preservation applies (i.e. for RLC AM). The uplink PDCP SN receiver status includes at least the PDCP SN of the first missing UL SDU and may include a bit map of the receive status of the out of sequence UL SDUs that the UE needs to retransmit in the target cell, if there are any such SDUs. The downlink PDCP SN transmitter status indicates the next PDCP SN that the target eNB shall assign to new SDUs, not having a PDCP SN yet. The source eNB may omit sending this message if none of the E-RABs of the UE shall be treated with PDCP status preservation.

9 After receiving the *RRCConnectionReconfiguration* message including the *mobilityControlInformation* , UE performs synchronisation to target eNB and accesses the target cell via RACH, following a contention-free procedure if a dedicated RACH preamble was indicated in the *mobilityControlInformation*, or following a contention-based procedure if no dedicated preamble was indicated. UE derives target eNB specific keys and configures the selected security algorithms to be used in the target cell.

10 The target eNB responds with UL allocation and timing advance.

11 When the UE has successfully accessed the target cell, the UE sends the *RRCConnectionReconfigurationComplete* message (C-RNTI) to confirm the handover, along with an uplink Buffer Status Report, whenever possible, to the target eNB to indicate that the handover procedure is completed



Samsung Exhibit 1015, Page 65 of 198
Samsung Electronics Co., Ltd. v. Asus Technology Licensing Inc.
IPR2024-01217

for the UE. The target eNB verifies the C-RNTI sent in the *RRCConnectionReconfigurationComplete* message. The target eNB can now begin sending data to the UE.

12 The target eNB sends a PATH SWITCH message to MME to inform that the UE has changed cell.

13 The MME sends an UPDATE USER PLANE REQUEST message to the Serving Gateway.

14 The Serving Gateway switches the downlink data path to the target side. The Serving gateway sends one or more "end marker" packets on the old path to the source eNB and then can release any U-plane/TNL resources towards the source eNB.

15 Serving Gateway sends an UPDATE USER PLANE RESPONSE message to MME.

16 The MME confirms the PATH SWITCH message with the PATH SWITCH ACKNOWLEDGE message.

17 By sending UE CONTEXT RELEASE, the target eNB informs success of HO to source eNB and triggers the release of resources by the source eNB. The target eNB sends this message after the PATH SWITCH ACKNOWLEDGE message is received from the MME.

18 Upon reception of the UE CONTEXT RELEASE message, the source eNB can release radio and C-plane related resources associated to the UE context. Any ongoing data forwarding may continue.

#### 10.1.2.1.2 U-plane handling

The U-plane handling during the Intra-E-UTRAN-Access mobility activity for UEs in ECM-CONNECTED takes the following principles into account to avoid data loss during HO:

- During HO preparation U-plane tunnels can be established between the source eNB and the target eNB. There is one tunnel established for uplink data forwarding and another one for downlink data forwarding for each E-RAB for which data forwarding is applied. In the case of a UE under an RN performing handover, forwarding tunnels can be established between the RN and the target eNB via the DeNB.
- During HO execution, user data can be forwarded from the source eNB to the target eNB. The forwarding may take place in a service and deployment dependent and implementation specific way.
  - Forwarding of downlink user data from the source to the target eNB should take place in order as long as packets are received at the source eNB from the EPC or the source eNB buffer has not been emptied.
- During HO completion:
  - The target eNB sends a PATH SWITCH message to MME to inform that the UE has gained access and MME sends a USER PLANE UPDATE REQUEST message to the Serving Gateway, the U-plane path is switched by the Serving Gateway from the source eNB to the target eNB.
  - The source eNB should continue forwarding of U-plane data as long as packets are received at the source eNB from the Serving Gateway or the source eNB buffer has not been emptied.

For **RLC-AM bearers**:

- During normal HO not involving Full Configuration:
  - For in-sequence delivery and duplication avoidance, PDCP SN is maintained on a bearer basis and the source eNB informs the target eNB about the next DL PDCP SN to allocate to a packet which does not have a PDCP sequence number yet (either from source eNB or from the Serving Gateway).
  - For security synchronisation, HFN is also maintained and the source eNB provides to the target one reference HFN for the UL and one for the DL i.e. HFN and corresponding SN.
  - In both the UE and the target eNB, a window-based mechanism is needed for duplication detection.
  - The occurrence of duplicates over the air interface in the target eNB is minimised by means of PDCP SN based reporting at the target eNB by the UE. In uplink, the reporting is optionally configured on a bearer basis by the eNB and the UE should first start by transmitting those reports when granted resources in the target eNB. In downlink, the eNB is free to decide when and for which bearers a report is sent and the UE does not wait for the report to resume uplink transmission.



Samsung Exhibit 1015, Page 66 of 198
Samsung Electronics Co., Ltd. v. Asus Technology Licensing Inc.
IPR2024-01217

  - The target eNB re-transmits and prioritizes all downlink PDCP SDUs forwarded by the source eNB (i.e. the target eNB should send data with PDCP SNs from X2 before sending data from S1), with the exception of PDCP SDUs of which the reception was acknowledged through PDCP SN based reporting by the UE.
  - The UE re-transmits in the target eNB all uplink PDCP SDUs starting from the first PDCP SDU following the last consecutively confirmed PDCP SDU i.e. the oldest PDCP SDU that has not been acknowledged at RLC in the source, excluding the PDCP SDUs of which the reception was acknowledged through PDCP SN based reporting by the target.
- During HO involving Full Configuration:
  - The following description below for RLC-UM bearers also applies for RLC-AM bearers. Data loss may happen.

For **RLC-UM bearers**:

- The PDCP SN and HFN are reset in the target eNB.
- No PDCP SDUs are retransmitted in the target eNB.
- The target eNB prioritize all downlink PDCP SDUs forwarded by the source eNB if any (i.e. the target eNB should send data with PDCP SNs from X2 before sending data from S1),.
- The UE PDCP entity does not attempt to retransmit any PDCP SDU in the target cell for which transmission had been completed in the source cell. Instead UE PDCP entity starts the transmission with other PDCP SDUs.

#### 10.1.2.2 Path Switch

After the downlink path is switched at the Serving GW downlink packets on the forwarding path and on the new direct path may arrive interchanged at the target eNB. The target eNodeB should first deliver all forwarded packets to the UE before delivering any of the packets received on the new direct path. The method employed in the target eNB to enforce the correct delivery order of packets is outside the scope of the standard.

In order to assist the reordering function in the target eNB, the Serving GW shall send one or more "end marker" packets on the old path immediately after switching the path for each E-RAB of the UE. The "end marker" packet shall not contain user data. The "end marker" is indicated in the GTP header. After completing the sending of the tagged packets the GW shall not send any further user data packets via the old path.

Upon receiving the "end marker" packets, the source eNB shall, if forwarding is activated for that bearer, forward the packet toward the target eNB.

On detection of an "end marker" the target eNB shall discard the end marker packet and initiate any necessary processing to maintain in sequence delivery of user data forwarded over X2 interface and user data received from the serving GW over S1 as a result of the path switch.

On detection of the "end marker", the target eNB may also initiate the release of the data forwarding resource. However, the release of the data forwarding resource is implementation dependent and could also be based on other mechanisms (e.g. timer-based mechanism).

EPC may change the uplink end-point of the tunnels with Path Switch procedure. However, the EPC should keep the old GTP tunnel end-point(s) sufficiently long time in order to minimise the probability of packet losses and avoid unintentional release of respective E-RAB(s).

#### 10.1.2.3 Data forwarding

##### 10.1.2.3.1 For RLC-AM DRBs

Upon handover, the source eNB may forward in order to the target eNB all downlink PDCP SDUs with their SN that have not been acknowledged by the UE. In addition, the source eNB may also forward without a PDCP SN fresh data arriving over S1 to the target eNB.



Samsung Exhibit 1015, Page 67 of 198
Samsung Electronics Co., Ltd. v. Asus Technology Licensing Inc.
IPR2024-01217

NOTE: Target eNB does not have to wait for the completion of forwarding from the source eNB before it begins transmitting packets to the UE.

The source eNB discards any remaining downlink RLC PDUs. Correspondingly, the source eNB does not forward the downlink RLC context to the target eNB.

NOTE: Source eNB does not need to abort on going RLC transmissions with the UE as it starts data forwarding to the target eNB.

Upon handover, the source eNB forwards to the Serving Gateway the uplink PDCP SDUs successfully received in-sequence until the sending of the Status Transfer message to the target eNB. Then at that point of time the source eNB stops delivering uplink PDCP SDUs to the S-GW and shall discard any remaining uplink RLC PDUs. Correspondingly, the source eNB does not forward the uplink RLC context to the target eNB.

Then the source eNB shall either:

- discard the uplink PDCP SDUs received out of sequence if the source eNB has not accepted the request from the target eNB for uplink forwarding or if the target eNB has not requested uplink forwarding for the bearer during the Handover Preparation procedure,
- forward to the target eNB the uplink PDCP SDUs received out of sequence if the source eNB has accepted the request from the target eNB for uplink forwarding for the bearer during the Handover Preparation procedure.

The PDCP SN of forwarded SDUs is carried in the "PDCP PDU number" field of the GTP-U extension header. The target eNB shall use the PDCP SN if it is available in the forwarded GTP-U packet.

For normal HO in-sequence delivery of upper layer PDUs during handover is based on a continuous PDCP SN and is provided by the "in-order delivery and duplicate elimination" function at the PDCP layer:

- in the downlink, the "in-order delivery and duplicate elimination" function at the UE PDCP layer guarantees in-sequence delivery of downlink PDCP SDUs;
- in the uplink, the "in-order delivery and duplicate elimination" function at the target eNB PDCP layer guarantees in-sequence delivery of uplink PDCP SDUs.

After a normal handover, when the UE receives a PDCP SDU from the target eNB, it can deliver it to higher layer together with all PDCP SDUs with lower SNs regardless of possible gaps.

For handovers involving Full Configuration, the source eNB behaviour is unchanged from the description above. The target eNB may not send PDCP SDUs for which delivery was attempted by the source eNB. The target eNB identifies these by the presence of the PDCP SN in the forwarded GTP-U packet and discards them.

After a Full Configuration handover, when the UE delivers received PDCP SDU from the source cell to the higher layer regardless of possible gaps. UE discards uplink PDCP SDUs for which transmission was attempted and retransmission of these over the target cell is not possible.

#### 10.1.2.3.2 For RLC-UM DRBs

Upon handover, the source eNB does not forward to the target eNB downlink PDCP SDUs for which transmission had been completed in the source cell. PDCP SDUs that have not been transmitted may be forwarded. In addition, the source eNB may forward fresh downlink data arriving over S1 to the target eNB. The source eNB discards any remaining downlink RLC PDUs. Correspondingly, the source eNB does not forward the downlink RLC context to the target eNB.

Upon handover, the source eNB forwards all uplink PDCP SDUs successfully received to the Serving Gateway (i.e. including the ones received out of sequence) and discards any remaining uplink RLC PDUs. Correspondingly, the source eNB does not forward the uplink RLC context to the target eNB.

#### 10.1.2.3.3 SRB handling

With respect to SRBs, the following principles apply at HO:

- No forwarding or retransmissions of RRC messages in the target;
- The PDCP SN and HFN are reset in the target.



Samsung Exhibit 1015, Page 68 of 198
Samsung Electronics Co., Ltd. v. Asus Technology Licensing Inc.
IPR2024-01217

#### 10.1.2.4 Void

#### 10.1.2.5 Void

#### 10.1.2.6 Void

#### 10.1.2.7 Timing Advance

In RRC_CONNECTED, the eNB is responsible for maintaining the timing advance. In some cases (e.g. during DRX), the timing advance is not necessarily always maintained and the MAC sublayer knows if the L1 is synchronised and which procedure to use to start transmitting in the uplink:

- as long as the L1 is non-synchronised, uplink transmission can only take place on PRACH.

For one UE, cases where the UL synchronisation status moves from "synchronised" to "non-synchronised" include:

- Expiration of a timer;
- Non-synchronised handover;

The value of the timer is either UE specific and managed through dedicated signalling between the UE and the eNB, or cell specific and indicated via broadcast information. In both cases, the timer is normally restarted whenever a new timing advance is given by the eNB:

- restarted to a UE specific value if any; or
- restarted to a cell specific value otherwise.

Upon DL data arrival or for positioning purpose, dedicated signature on PRACH can be allocated by the eNB to UE. When a dedicated signature on PRACH is allocated, the UE shall perform the corresponding random access procedure regardless of its L1 synchronisation status.

Timing advance updates are signalled by the eNB to the UE in MAC PDUs addressed via C-RNTI.

### 10.1.3 Measurements

Measurements to be performed by a UE for intra/inter-frequency mobility can be controlled by E-UTRAN, using broadcast or dedicated control. In RRC_IDLE state, a UE shall follow the measurement parameters defined for cell reselection specified by the E-UTRAN broadcast. The use of dedicated measurement control for RRC_IDLE state is possible through the provision of UE specific priorities (see sub-clause 10.2.4). In RRC_CONNECTED state, a UE shall follow the measurement configurations specified by RRC directed from the E-UTRAN (e.g. as in UTRAN MEASUREMENT_CONTROL).

Intra-frequency neighbour (cell) measurements and inter-frequency neighbour (cell) measurements are defined as follows:

- Intra-frequency neighbour (cell) measurements: Neighbour cell measurements performed by the UE are intra-frequency measurements when the current and target cell operates on the same carrier frequency. The UE shall be able to carry out such measurements without measurement gaps.
- Inter-frequency neighbour (cell) measurements: Neighbour cell measurements performed by the UE are inter-frequency measurements when the neighbour cell operates on a different carrier frequency, compared to the current cell. The UE should not be assumed to be able to carry out such measurements without measurement gaps.

Whether a measurement is non gap assisted or gap assisted depends on the UE's capability and current operating frequency. The UE determines whether a particular cell measurement needs to be performed in a transmission/reception gap and the scheduler needs to know whether gaps are needed:

- Same carrier frequency and cell bandwidths (Scenario A): an intra-frequency scenario; not measurement gap assisted.



Samsung Exhibit 1015, Page 69 of 198
Samsung Electronics Co., Ltd. v. Asus Technology Licensing Inc.
IPR2024-01217

- Same carrier frequency, bandwidth of the target cell smaller than the bandwidth of the current cell (Scenario B): an intra-frequency scenario; not measurement gap assisted.
- Same carrier frequency, bandwidth of the target cell larger than the bandwidth of the current cell (Scenario C): an intra-frequency scenario; not measurement gap assisted.
- Different carrier frequencies, bandwidth of the target cell smaller than the bandwidth of the current cell and bandwidth of the target cell within bandwidth of the current cell (Scenario D): an inter-frequency scenario; measurement gap-assisted scenario.
- Different carrier frequencies, bandwidth of the target cell larger than the bandwidth of the current cell and bandwidth of the current cell within bandwidth of the target cell (Scenario E): an inter-frequency scenario; measurement gap-assisted scenario.
- Different carrier frequencies and non-overlapping bandwidth, (Scenario F): an inter-frequency scenario; measurement gap-assisted scenario.

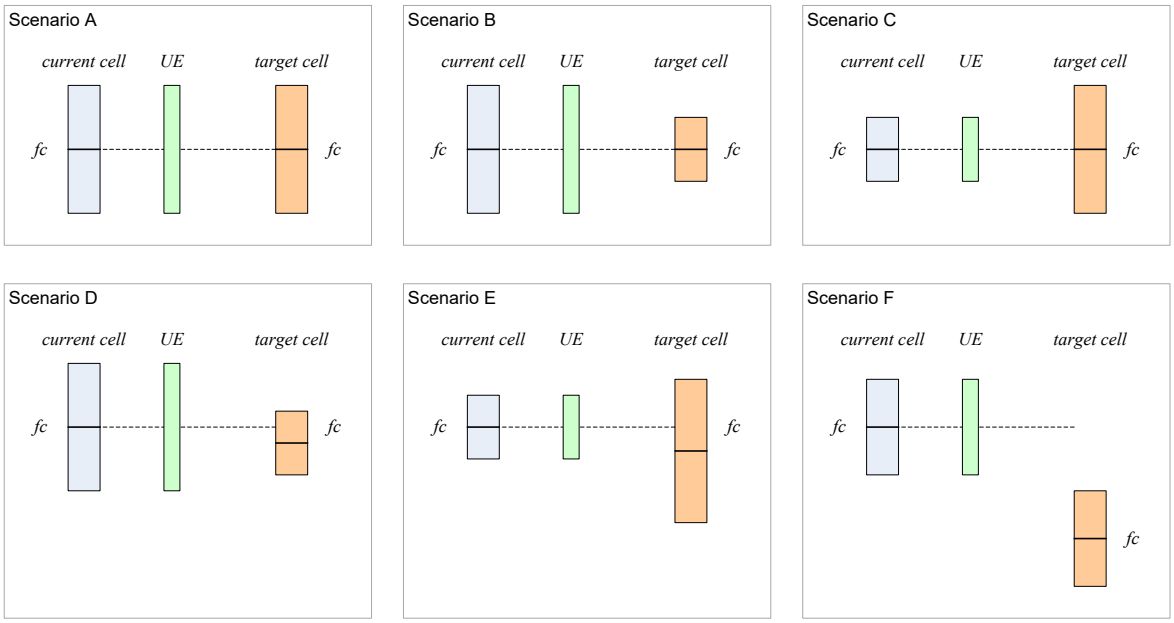


**Figure 10.1.3-1: Inter and Intra-frequency measurements scenarios**

Measurement gaps patterns are configured and activated by RRC.

### 10.1.3.1 Intra-frequency neighbour (cell) measurements

In a system with frequency reuse = 1, mobility within the same frequency layer (i.e. between cells with the same carrier frequency) is predominant. Good neighbour cell measurements are needed for cells that have the same carrier frequency as the serving cell in order to ensure good mobility support and easy network deployment. Search for neighbour cells with the same carrier frequency as the serving cell, and measurements of the relevant quantities for identified cells are needed.

NOTE: To avoid UE activity outside the DRX cycle, the reporting criteria for neighbour cell measurements should match the used DRX cycle.

### 10.1.3.2 Inter-frequency neighbour (cell) measurements

Regarding mobility between different frequency layers (i.e. between cells with a different carrier frequency), UE may need to perform neighbour cell measurements during DL/UL idle periods that are provided by DRX or packet scheduling (i.e. gap assisted measurements).



Samsung Exhibit 1015, Page 70 of 198
Samsung Electronics Co., Ltd. v. Asus Technology Licensing Inc.
IPR2024-01217

### 10.1.4 Paging and C-plane establishment

Paging groups (where multiple UEs can be addressed) are used on PDCCH:

- Precise UE identity is found on PCH;
- DRX configurable via BCCH and NAS;
- Only one subframe allocated per paging interval per UE;
- The network may divide UEs to different paging occasions in time;
- There is no grouping within paging occasion;
- One paging RNTI for PCH.

### 10.1.5 Random Access Procedure

The random access procedure is characterized by:

- Common procedure for FDD and TDD;
- One procedure irrespective of cell size and number serving cells when CA is configured;

The random access procedure is performed for the following six events:

- Initial access from RRC_IDLE;
- RRC Connection Re-establishment procedure;
- Handover;
- DL data arrival during RRC_CONNECTED requiring random access procedure;
  - E.g. when UL synchronisation status is “non-synchronised”;
- UL data arrival during RRC_CONNECTED requiring random access procedure;
  - E.g. when UL synchronisation status is "non-synchronised" or there are no PUCCH resources for SR available.
- For positioning purpose during RRC_CONNECTED requiring random access procedure;
  - E.g. when timing advance is needed for UE positioning;

Furthermore, the random access procedure takes two distinct forms:

- Contention based (applicable to first five events);
- Non-contention based (applicable to only handover, DL data arrival and positioning).

Normal DL/UL transmission can take place after the random access procedure.

An RN supports both contention-based and non-contention-based random access. When an RN performs the random access procedure, it suspends any current Un subframe configuration, meaning it temporarily disregards any Un-specific configuration. The Un subframe configuration is resumed at successful random access procedure completion.

#### 10.1.5.1 Contention based random access procedure

The contention based random access procedure is outlined on Figure 10.1.5.1-1 below:



Samsung Exhibit 1015, Page 71 of 198
Samsung Electronics Co., Ltd. v. Asus Technology Licensing Inc.
IPR2024-01217

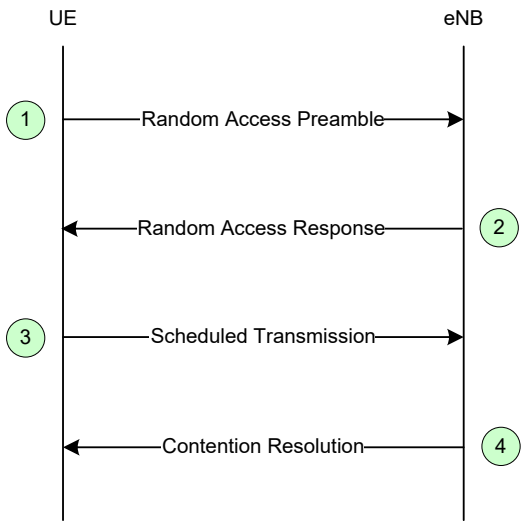


**Figure 10.1.5.1-1: Contention based Random Access Procedure**

The four steps of the contention based random access procedures are:

1) Random Access Preamble on RACH in uplink:
   - There are two possible groups defined and one is optional. If both groups are configured the size of message 3 and the pathloss are used to determine which group a preamble is selected from. The group to which a preamble belongs provides an indication of the size of the message 3 and the radio conditions at the UE. The preamble group information along with the necessary thresholds are broadcast on system information.
2) Random Access Response generated by MAC on DL-SCH:
   - Semi-synchronous (within a flexible window of which the size is one or more TTI) with message 1;
   - No HARQ;
   - Addressed to RA-RNTI on PDCCH;
   - Conveys at least RA-preamble identifier, Timing Alignment information, initial UL grant and assignment of Temporary C-RNTI (which may or may not be made permanent upon Contention Resolution);
   - Intended for a variable number of UEs in one DL-SCH message.
3) First scheduled UL transmission on UL-SCH:
   - Uses HARQ;
   - Size of the transport blocks depends on the UL grant conveyed in step 2 and is at least 80 bits.
   - For initial access:
     - Conveys the RRC Connection Request generated by the RRC layer and transmitted via CCCH;
     - Conveys at least NAS UE identifier but no NAS message;
     - RLC TM: no segmentation;
   - For RRC Connection Re-establishment procedure:
     - Conveys the RRC Connection Re-establishment Request generated by the RRC layer and transmitted via CCCH;
     - RLC TM: no segmentation;
     - Does not contain any NAS message.



Samsung Exhibit 1015, Page 72 of 198
Samsung Electronics Co., Ltd. v. Asus Technology Licensing Inc.
IPR2024-01217

- After handover, in the target cell:
  - Conveys the ciphered and integrity protected RRC Handover Confirm generated by the RRC layer and transmitted via DCCH;
  - Conveys the C-RNTI of the UE (which was allocated via the Handover Command);
  - Includes an uplink Buffer Status Report when possible.
- For other events:
  - Conveys at least the C-RNTI of the UE.

4) Contention Resolution on DL:

- Early contention resolution shall be used i.e. eNB does not wait for NAS reply before resolving contention
- Not synchronised with message 3;
- HARQ is supported;
- Addressed to:
  - The Temporary C-RNTI on PDCCH for initial access and after radio link failure;
  - The C-RNTI on PDCCH for UE in RRC_CONNECTED;
- HARQ feedback is transmitted only by the UE which detects its own UE identity, as provided in message 3, echoed in the Contention Resolution message;
- For initial access and RRC Connection Re-establishment procedure, no segmentation is used (RLC-TM).

The Temporary C-RNTI is promoted to C-RNTI for a UE which detects RA success and does not already have a C-RNTI; it is dropped by others. A UE which detects RA success and already has a C-RNTI, resumes using its C-RNTI.

When CA is configured, the first three steps of the contention based random access procedures occur on the PCell while contention resolution (step 4) can be cross-scheduled by the PCell.

### 10.1.5.2 Non-contention based random access procedure

The non-contention based random access procedure is outlined on Figure 10.1.5.2-1 below:

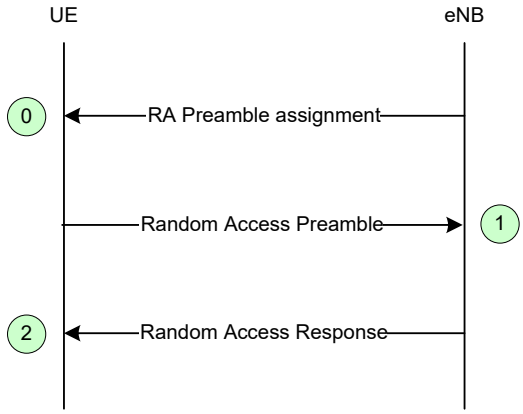


**Figure 10.1.5.2-1: Non-contention based Random Access Procedure**

The three steps of the non-contention based random access procedures are:

0) Random Access Preamble assignment via dedicated signalling in DL:

- eNB assigns to UE a non-contention Random Access Preamble (a Random Access Preamble not within the set sent in broadcast signalling).



Samsung Exhibit 1015, Page 73 of 198
Samsung Electronics Co., Ltd. v. Asus Technology Licensing Inc.
IPR2024-01217

- Signalled via:
  - HO command generated by target eNB and sent via source eNB for handover;
  - PDCCH in case of DL data arrival or positioning.

1) Random Access Preamble on RACH in uplink:
   - UE transmits the assigned non-contention Random Access Preamble.
2) Random Access Response on DL-SCH:
   - Semi-synchronous (within a flexible window of which the size is two or more TTIs) with message 1;
   - No HARQ;
   - Addressed to RA-RNTI on PDCCH;
   - Conveys at least:
     - Timing Alignment information and initial UL grant for handover;
     - Timing Alignment information for DL data arrival;
     - RA-preamble identifier.
     - Intended for one or multiple UEs in one DL-SCH message.

When CA is configured, the Random Access Preamble assignment via PDCCH of step 0, step 1 and 2 of the non-contention based random access procedure occur on the PCell.

### 10.1.5.3 Interaction model between L1 and L2/3 for Random Access Procedure

Random access procedure described above is modelled in Figure 10.1.5.3-1 below from L1 and L2/3 interaction point of view. L2/L3 receives indication from L1 whether ACK is received or DTX is detected after indication of Random Access Preamble transmission to L1. L2/3 indicates L1 to transmit first scheduled UL transmission (RRC Connection Request in case of initial access) if necessary or Random Access Preamble based on the indication from L1.

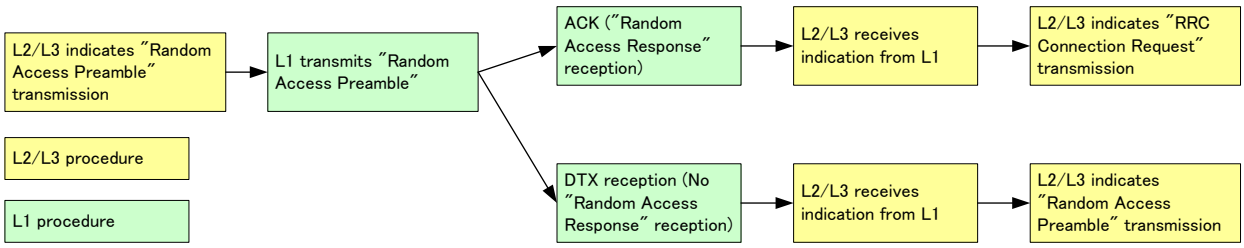


**Figure 10.1.5.3-1: Interaction model between L1 and L2/3 for Random Access Procedure**

## 10.1.6 Radio Link Failure

Two phases govern the behaviour associated to radio link failure as shown on Figure 10.1.6-1:

- First phase:
  - started upon radio problem detection;
  - leads to radio link failure detection;
  - no UE-based mobility;
  - based on timer or other (e.g. counting) criteria ($T_1$).



Samsung Exhibit 1015, Page 74 of 198
Samsung Electronics Co., Ltd. v. Asus Technology Licensing Inc.
IPR2024-01217

- Second Phase:
  - started upon radio link failure detection or handover failure;
  - leads to RRC_IDLE;
  - UE-based mobility;
  - Timer based ($T_2$).

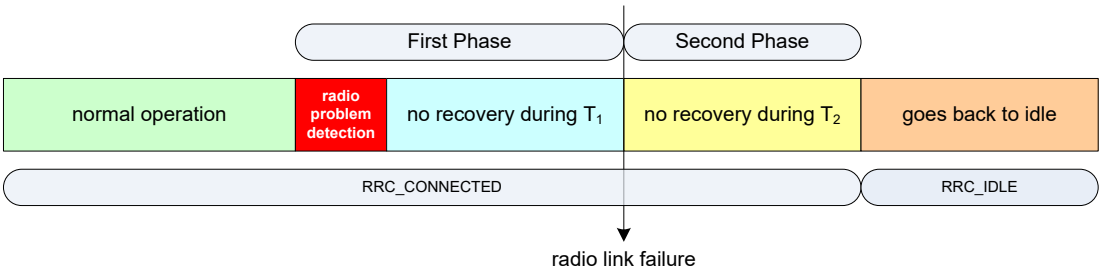


**Figure 10.1.6-1: Radio Link Failure**

Table 10.1.6-1 below describes how mobility is handled with respect to radio link failure:

**Table 10.1.6-1: Mobility and Radio Link Failure**

| Cases | First Phase | Second Phase | T2 expired |
|---|---|---|---|
| UE returns to the same cell | Continue as if no radio problems occurred | Activity is resumed by means of explicit signalling between UE and eNB | Go via RRC_IDLE |
| UE selects a different cell from the same eNB | N/A | Activity is resumed by means of explicit signalling between UE and eNB | Go via RRC_IDLE |
| UE selects a cell of a prepared eNB (NOTE) | N/A | Activity is resumed by means of explicit signalling between UE and eNB | Go via RRC_IDLE |
| UE selects a cell of a different eNB that is not prepared (NOTE) | N/A | Go via RRC_IDLE | Go via RRC_IDLE |
| NOTE: a prepared eNB is an eNB which has admitted the UE during an earlier executed HO preparation phase. | | | |

In the Second Phase, in order to resume activity and avoid going via RRC_IDLE when the UE returns to the same cell or when the UE selects a different cell from the same eNB, or when the UE selects a cell from a different eNB, the following procedure applies:

- The UE stays in RRC_CONNECTED;
- The UE accesses the cell through the random access procedure;
- The UE identifier used in the random access procedure for contention resolution (i.e. C-RNTI of the UE in the cell where the RLF occurred + physical layer identity of that cell + MAC based on the keys of that cell) is used by the selected eNB to authenticate the UE and check whether it has a context stored for that UE:
  - If the eNB finds a context that matches the identity of the UE, it indicates to the UE that its connection can be resumed;
  - If the context is not found, RRC connection is released and UE initiates procedure to establish new RRC connection. In this case UE is required to go via RRC_IDLE.

The radio link failure procedure applies also for RNs, with the exception that the RN is limited to select a cell from its DeNB cell list. Upon detecting radio link failure, the RN discards any current Un subframe configuration (for communication with its DeNB), enabling it to perform normal contention-based RACH as part of the re-establishment.



Samsung Exhibit 1015, Page 75 of 198
Samsung Electronics Co., Ltd. v. Asus Technology Licensing Inc.
IPR2024-01217

Upon successful re-establishment, the Un subframe configuration can be reconfigured using the same procedure as at initial RN startup.

### 10.1.7 Radio Access Network Sharing

E-UTRAN shall support radio access network sharing based on support for multi-to-multi relationship between E-UTRAN nodes and EPC nodes (S1-flex).

If the E-UTRAN is shared by multiple operators, the system information broadcasted in each shared cell contains the PLMN-id of each operator (up to 6) and a single tracking area code (TAC) valid within all the PLMNs sharing the radio access network resources.

The UE shall be able to read up to 6 PLMN-ids, to select one of the PLMN-ids at initial attachment and to indicate this PLMN-id to the E-UTRAN in subsequent instances of the Random Access procedures (e.g. as defined in subclause 10.1.5). The E-UTRAN shall select an appropriate MME for the PLMN indicated by the UE. Once attached to an MME, the UE shall be able to indicate the allocated MME in subsequent instances of the Random Access procedures. The indication of the allocated MMEC is contained in the temporary UE identity.

Handling of area restrictions for UE in ECM-CONNECTED shall follow the principles specified in sub-clause 10.4.

### 10.1.8 Handling of Roaming and Area Restrictions for UEs in ECM-CONNECTED

Handling of roaming/area restrictions and handling of subscription specific preferences in ECM-CONNECTED is performed in the eNB based on information provided by the EPC over the S1 interface.

## 10.2 Inter RAT

Service-based redirection between GERAN / UTRAN and E-UTRAN is supported in both directions. This should not require inter-RAT reporting in RRC CONNECTION REQUEST.

### 10.2.1 Cell reselection

A UE in RRC_IDLE performs cell reselection. The principles of this procedure are as follows:

- The UE makes **measurements** of attributes of the serving and neighbour cells to enable the reselection process:
  - For a UE to search and measure neighbouring GERAN cells, the ARFCNs of the BCCH carriers need to be indicated in the serving cell system information (i.e., an NCL). The NCL does not contain BSICs or cell specific offsets and Qrxlevmin is given per frequency band.
  - For a UE to search and measure neighbouring UTRAN cells, the serving cell can indicate an NCL containing a list of carrier frequencies and scrambling codes.
  - Measurements may be omitted if the serving cell attribute fulfils particular search or measurement criteria.
- **Cell reselection** identifies the cell that the UE should camp on. It is based on cell reselection criteria which involves measurements of the serving and neighbour cells:
  - Inter-RAT reselection is based on absolute priorities where UE tries to camp on highest priority RAT available. Absolute priorities for inter-RAT reselection are provided only by the RPLMN and valid only within the RPLMN; priorities are given by the system information and valid for all UEs in a cell, specific priorities per UE can be signalled in the RRC Connection Release message. A validity time can be associated with UE specific priorities.
  - It should be possible to prevent the UE from reselecting to specific detected neighbouring cells;
  - The UE is allowed to "leave" the source E-UTRAN cell to read the target GERAN cell broadcast, in order to determine its "suitability", prior to completing the cell reselection;
  - Cell reselection can be speed dependent (speed detection based on UTRAN solution);



Samsung Exhibit 1015, Page 76 of 198
Samsung Electronics Co., Ltd. v. Asus Technology Licensing Inc.
IPR2024-01217

Cell access restrictions apply as for UTRAN, which consist of access class (AC) barring and cell reservation (e.g. for cells "reserved for operator use") applicable for mobiles in RRC_IDLE mode.

When performing cell reselection while the UE is camped on another RAT, the principles of this procedure are as follows:

- The UE measures attributes of the E-UTRA neighbouring cells:
  - Only the carrier frequencies need to be indicated to enable the UE to search and measure E-UTRA neighbouring cells;
- Cell reselection identifies the cell that the UE should camp on. It is based on cell reselection criteria which involves measurements of the serving and neighbour cells:
  - For E-UTRA neighbouring cells, there is no need to indicate cell-specific cell reselection parameters i.e. these parameters are common to all neighbouring cells on an E-UTRA frequency;
- Cell reselection parameters are applicable to all UEs in a cell, but it is possible to configure specific reselection parameters per UE group or per UE.
- It should be possible to prevent the UE from reselecting to specific detected neighbouring cells.

### 10.2.2 Handover

Inter RAT HO is designed so that changes to GERAN and UTRAN are minimised. This can be done by following the principles specified for GERAN to/from UTRAN intersystem HO. In particular the following principles are applied to E-UTRAN Inter RAT HO design:

1. Inter RAT HO is network controlled through source access system. The source access system decides about starting the preparation and provides the necessary information to the target system in the format required by the target system. That is, the source system adapts to the target system. The actual handover execution is decided in the source system.
2. Inter RAT HO is backwards handover, i.e. radio resources are prepared in the target 3GPP access system before the UE is commanded by the source 3GPP access system to change to the target 3GPP access system.
3. To enable backwards handover, and while RAN level interfaces are not available, a control interface exists in CN level. In Inter RAT HO involving E-UTRAN access, this interface is between 2G/3G SGSN and corresponding MME/Serving Gateway.
4. The target access system will be responsible for giving exact guidance for the UE on how to make the radio access there (this includes radio resource configuration, target cell system information etc.). This information is given during the handover preparation and should be transported completely transparently through the source access system to the UE.
5. Mechanisms for avoiding or mitigating the loss of user data (i.e. forwarding) can be used until the 3GPP Anchor determines that it can send DL U-plane data directly to the target system.
6. The handover procedure should not require any UE to CN signalling in order for data to start to flow in the target system. This requires that the security context, UE capability context and QoS context is transferred (or translated) within the network between source and target system.
7. Similar handover procedure should apply for handovers of both real time and non-real time services.
8. Similar handover procedure should apply for both Inter RAT Handover and intra-LTE Handover with EPC node change.
9. Network controlled mobility is supported even if no prior UE measurements have been performed on the target cell and/or frequency i.e. “blind HO” is supported.

### 10.2.2a Inter-RAT cell change order to GERAN with NACC

For interworking towards GERAN, inter-RAT cell change order with NACC is supported even if no prior UE measurements have been performed on the system i.e. “blind NACC” is supported.



Samsung Exhibit 1015, Page 77 of 198
Samsung Electronics Co., Ltd. v. Asus Technology Licensing Inc.
IPR2024-01217

## 10.2.2b Inter-RAT handovers from E-UTRAN

### 10.2.2b.1 Data forwarding

#### 10.2.2b.1.1 For RLC-AM bearers

Upon handover, the eNB may forward all downlink PDCP SDUs that have not been acknowledged by the UE, or all downlink PDCP SDUs that have not been transmitted to the UE, to the target node. In addition, the eNB may forward fresh data arriving over S1 to the target node.

NOTE: Any assigned PDCP SNs are not forwarded because of PDCP reset.

NOTE: Target node does not have to wait for the completion of forwarding from the eNB before it begins transmitting packets to the UE.

The eNB discards any remaining downlink RLC PDUs.

Upon handover, all successfully received PDCP SDUs are delivered to the upper layers in the UE.

NOTE: eNB does not need to abort ongoing RLC transmissions with the UE as it starts data forwarding to the target node.

Upon handover, the eNB may forward uplink PDCP SDUs successfully received to the Serving Gateway and shall discard any remaining uplink RLC PDUs.

Correspondingly, the eNB does not forward the downlink and uplink RLC context.

For the uplink, the UE transmits over the target RAT from the first PDCP SDU for which transmission has not been attempted in the source cell.

In-sequence delivery of upper layer PDUs during handover is not guaranteed.

#### 10.2.2b.1.2 For RLC-UM bearers

Upon handover, the eNB does not forward to the target node downlink PDCP SDUs for which transmission had been completed in the source cell. PDCP SDUs that have not been transmitted may be forwarded. In addition, the eNB may forward fresh data arriving over S1 to the target node. The eNB discards any remaining downlink RLC PDUs.

Upon handover, all successfully received PDCP SDUs are delivered to the upper layers in the UE.

Upon handover, the eNB may forward all uplink PDCP SDUs successfully received to the Serving Gateway and discards any remaining uplink RLC PDUs.

For the uplink, the UE transmits over the target RAT from the first PDCP SDU for which transmission has not been attempted in the source cell.

Correspondingly, the eNB does not forward the downlink and uplink RLC context.

## 10.2.3 Measurements

### 10.2.3.1 Inter-RAT handovers from E-UTRAN

Measurements to be performed by a UE for inter-RAT mobility can be controlled by E-UTRAN, using broadcast or dedicated control. In RRC_CONNECTED state, a UE shall follow the measurement parameters specified by RRC directed from the E-UTRAN (e.g. as in UTRAN MEASUREMENT_CONTROL).

UE performs inter-RAT neighbour cell measurements during DL/UL idle periods that are provided by the network through suitable DRX/DTX period or packet scheduling if necessary.



Samsung Exhibit 1015, Page 78 of 198
Samsung Electronics Co., Ltd. v. Asus Technology Licensing Inc.
IPR2024-01217

#### 10.2.3.2 Inter-RAT handovers to E-UTRAN

From UTRAN, UE performs E-UTRAN measurements by using idle periods created by compressed mode (CELL_DCH) or DRX (other states except CELL_FACH).

From GERAN, E-UTRAN measurements are performed in the same way as WCDMA measurements for handover to UTRAN: E-UTRAN measurements are performed in GSM idle frames in a time multiplexed manner.

#### 10.2.3.3 Inter-RAT cell reselection from E-UTRAN

In RRC_IDLE state, a UE shall follow the measurement parameters specified by the E-UTRAN broadcast (as in UTRAN SIB). The use of dedicated measurement control is possible through the provision of UE specific priorities (see sub-clause 10.2.4).

#### 10.2.3.4 Limiting measurement load at UE

Introduction of E-UTRA implies co-existence of various UE capabilities. Each UE may support different combinations of RATs, e.g., E-UTRA, UTRA, GSM, and non-3GPP RATs, and different combinations of frequency bands, e.g., 800 MHz, 1.7 GHz, 2 GHZ, etc. Despite such heterogeneous environment, the measurement load at UE should be minimised. To limit the measurement load and the associated control load:

- E-UTRAN can configure the RATs to be measured by UE;
- The number of measurement criteria (event and periodic reporting criteria) should be limited (as in TS 25.133 subclause 8.3.2 [7]);
- E-UTRAN should be aware of the UE capabilities for efficient measurement control, to prevent unnecessary waking up of the measurement entity;
- Blind HO (i.e., HO without measurement reports from UE) is possible.

### 10.2.4 Network Aspects

Inter-frequency/inter-RAT UE based mobility relies on a “priority based scheme”, where the network configures a list of RATs/frequencies to be taken as basis for UE’s inter-frequency/inter-RAT cell reselection decisions in priority order. E-UTRAN cells can enable inter-frequency/inter-RAT cell reselection by broadcasting a common priority valid for all UEs in a given cell in addition to other inter-frequency/inter-RAT information.

NOTE: The same principles apply in UTRAN.

These common priorities can be overwritten by E-UTRAN through dedicated signalling to individual UEs at RRC_CONNECTED to RRC_IDLE transition.

NOTE: In order to have consistent inter-RAT operation, the same principles apply to inter-RAT reselection to E-UTRAN. For UTRAN this includes also the transitions within RRC_CONNECTED state from CELL_DCH to CELL_PCH and URA_PCH.

Setting dedicated priorities by E-UTRAN can be based on subscription related information provided by the MME.

### 10.2.5 CS fallback

CS fallback can be performed via different options. The following table summarize the various CS fallback options per RAT, necessary UE capabilities and FGI index which should be set to ‘1’. The meaning of FGI index is specified in [16, Annex B]



Samsung Exhibit 1015, Page 79 of 198
Samsung Electronics Co., Ltd. v. Asus Technology Licensing Inc.
IPR2024-01217

**Table 10.2.5-1: CS fallback options**

| Target RAT | Solutions | Release | UE Capability | FGI Index |
|---|---|---|---|---|
| CS fallback to UMTS | RRC Connection Release with Redirection without Sys Info | Rel-8 | (NOTE 1)<br>Mandatory for UEs supporting CS fallback to UMTS | |
| | RRC Connection Release with Redirection with Sys Info | Rel-9 | (NOTE 1)<br>e-RedirectionUTRA | |
| | PS handover with DRB(s) | Rel-8 | (NOTE 1)<br>Mandatory for UEs supporting CS fallback to UMTS | FGI8, FGI22 |
| CS fallback to GSM | RRC Connection Release with Redirection without Sys Info | Rel-8 | (NOTE 2)<br>Mandatory for UEs supporting CS fallback to GSM | |
| | RRC Connection Release with Redirection with Sys Info | Rel-9 | (NOTE 2)<br>e-RedirectionGERAN | |
| | Cell change order without NACC | Rel-8 | (NOTE 2)<br>Mandatory for UEs supporting CS fallback to GSM | FGI10 |
| | Cell change order with NACC | Rel-8 | (NOTE 2)<br>Mandatory for UEs supporting CS fallback to GSM | FGI10 |
| | PS handover | Rel-8 | (NOTE 2)<br>interRAT-PS-HO-ToGERAN | |

NOTE 1: All CS fallback to UMTS capable UE shall indicate that it supports UTRA FDD or TDD and supported band list in the UE capability.
NOTE 2: All CS fallback to GSM capable UE shall indicate that it supports GERAN and supported band list in the UE capability.
NOTE 3: The measurement may be performed before any of the above CS fallback solution is triggered to select the target cell or frequency layer more accurately based on eNB decision. eNB may trigger any of above CS fallback solutions blindly.

# 10.3 Mobility between E-UTRAN and Non-3GPP radio technologies

## 10.3.1 UE Capability Configuration

A UE shall be able to communicate with the E-UTRAN about its radio access capability, such as the system (including the release and frequency band) it supports and its receive and transmit capabilities (single/dual radio, dual receiver). UE shall transfer its capability about other radio technologies over E-UTRAN using the same procedure used to carry its E-UTRAN radio capability.

## 10.3.2 Mobility between E-UTRAN and cdma2000 network

This section describes the E-UTRAN mechanisms to support idle and active mode mobility between E-UTRAN and cdma2000 HRPD or 1xRTT. The overall system is described in [17].

### 10.3.2.1 Tunnelling of cdma2000 Messages over E-UTRAN between UE and cdma2000 Access Nodes

In order to efficiently support handover procedures when on E-UTRAN with a cdma2000 target system, cdma2000 messages are sent transparently to the target system over the E-UTRAN, with the eNB and MME acting as relay points.



Samsung Exhibit 1015, Page 80 of 198
Samsung Electronics Co., Ltd. v. Asus Technology Licensing Inc.
IPR2024-01217

To support the MME in its selection of the correct target system node to which it should route an Uplink tunnelled message and to provide the target system with information that is needed to resolve technology-specific measurement information (RouteUpdate and pilot strength measurements) that are delivered to the cdma2000 system, each eNB cell is associated with a cdma2000 HRPD SectorID and/or with a cdma2000 1xRTT SectorID (generically referred to as cdma2000 reference cellid). This cdma2000 reference cellid is provided by the eNB to the MME using the cdma2000 message transfer capability over S1-AP and forwarded to the target system via the S101 interface and corresponding interface to the cdma2000 1xRTT system.

Tunnelling is achieved over the E-UTRAN radio interface by encapsulating tunnelled cdma2000 messages in the UL Information Transfer (for pre-registration signalling) or UL Handover Preparation transfer (for handover signalling) and DL Information Transfer RRC messages (e.g., similar to UMTS Uplink/Downlink Direct Transfer). The reason for using different UL transfer messages is so that the UL Handover Preparation transfer messages can use a higher priority signalling radio bearer. For the UL/DL Information Transfer messages a specific IE in these RRC messages is used to identify the type of information contained in the message (e.g., NAS, TunneledMsg). Additionally if the message is carrying a tunnelled message, an additional IE is included to carry cdma2000 specific RRC Tunnelling Procedure Information (e.g. RAT type).

AS level security will be applied for these UL Information Transfer / UL Handover Preparation Transfer and DL Information Transfer RRC messages as normal but there is no NAS level security for these tunnelled cdma2000 messages.

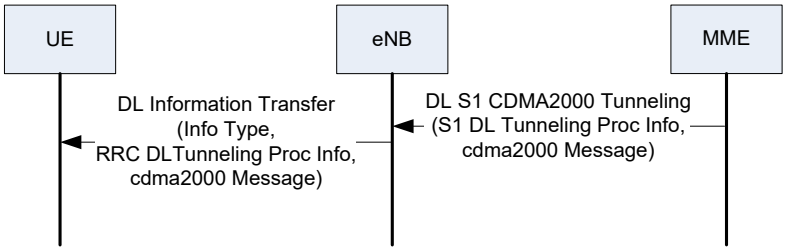


**Figure 10.3.2.1-1: Downlink Direct Transfer**

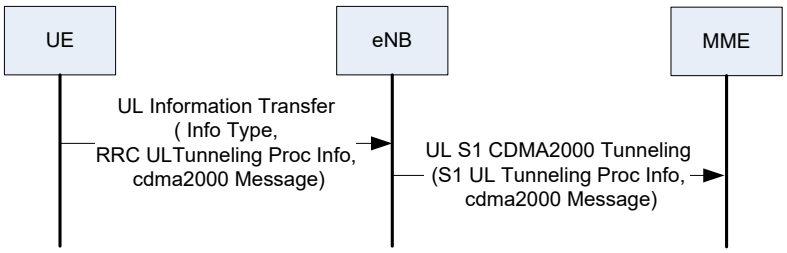


**Figure 10.3.2.1-2: Uplink Direct Transfer**

Tunnelling to the MME is achieved over the S1-MME interface by encapsulating the tunnelled cdma2000 message in a new S1 CDMA tunnelling messages. These S1 messages carry in addition to the tunnelled message some additional cdma2000 specific IEs (e.g. cdma2000 Reference Cell Id, RAT type, cdma2000 message type).

### 10.3.2.2 Mobility between E-UTRAN and HRPD

#### 10.3.2.2.1 Mobility from E-UTRAN to HRPD

##### 10.3.2.2.1.1 HRPD System Information Transmission in E-UTRAN

The HRPD system information block (SIB) shall be sent on the E-UTRAN BCCH. The UE shall monitor the E-UTRAN BCCH during the RRC_IDLE and RRC_CONNECTED modes to retrieve the HRPD system



Samsung Exhibit 1015, Page 81 of 198
Samsung Electronics Co., Ltd. v. Asus Technology Licensing Inc.
IPR2024-01217

information for the preparation of cell reselection or handover from the E-UTRAN to HRPD system. HRPD system information may also be provided to the UE by means of dedicated signalling. The HRPD system information contains HRPD neighbouring cell information, cdma timing information, as well as information controlling the HRPD pre-registration.

#### 10.3.2.2.1.2 Measuring HRPD from E-UTRAN

Measurement events and parameters for HRPD measurements are to be aligned with those defined in section 10.2.3.

##### 10.3.2.2.1.2.1 Idle Mode Measurement Control

UE shall be able to make measurements on the HRPD cells in RRC_IDLE mode to perform cell re-selection.

The intra-3GPP inter-RAT idle mode measurement control is re-used to control the idle mode measurements on HRPD. The UE performs measurement on HRPD when the signal quality from E-UTRAN serving cell falls below a given threshold.

##### 10.3.2.2.1.2.2 Active Mode Measurement Control

In RRC_CONNECTED mode, the UE shall perform radio measurements on the HRPD network when directed by the E-UTRAN network. The network provides the required HRPD neighbour cell list information and measurement controls to the UE through dedicated RRC signalling. When needed the eNB is responsible for configuring and activating the HRPD measurements on the UE via the dedicated RRC signalling message. Periodic and event-triggered measurements are supported.

For single-radio terminals, measurement gaps are needed to allow the UE to switch into the HRPD network and do radio measurements. These measurement gaps are network-controlled. The eNB is responsible for configuring the gap pattern and providing it to the UE through RRC dedicated signalling. Terminals with a dual receiver perform measurements on HRPD neighbour cells without tuning away from the E-UTRAN network. No DL gap patterns will be required for UEs which are capable of simultaneous reception on the involved frequency bands. No UL gap patterns will be required for UEs which are capable simultaneous transmission in one access and measuring on another access.

##### 10.3.2.2.1.2.3 Active Mode Measurement

In RRC_CONNECTED mode, the UE measures the strengths of each of the HRPD neighbour cells and reports them in an RRC message.

#### 10.3.2.2.1.3 Pre-registration to HRPD Procedure

Pre-registration allows a UE to establish a presence with an HRPD system in advance of a cell re-selection or handover. E-UTRAN network instructs the UE whether the pre-registration is needed over broadcast channel and in a dedicated RRC message.

The signalling procedure is transparent to E-UTRAN network. In the pre-registration to HRPD, messages shall be tunnelled inside RRC and S1-AP messages between the UE and MME and in a generic "transfer" message between source MME and target access network.

The UE is responsible for maintaining the HRPD context e.g. by performing periodic re-registrations if needed. The UE will use pre-registration zone information (including the current HRPD Pre-registration Zone and a list of HRPD Secondary Pre-registration Zone ID) to decide whether a re-registration shall be performed. A dual-receiver UE can ignore the parameter. E-UTRAN will provide the pre-registration zone information on the E-UTRAN system information broadcast channel or dedicated RRC signalling (unless it is determined that the UE will read the E-UTRAN system information broadcast channel in RRC_CONNECTED). Re-registrations are only allowed in areas where pre-registration is requested.

The managing of pre-registration and re-registration is handled by HRPD upper layer. The UE should indicate if it is pre-registered when sending measurement reports on cdma2000 cells.

#### 10.3.2.2.1.4 E-UTRAN to HRPD Cell Re-selection

For the "Optimized Idle-mode Mobility" in [19], the pre-condition for cell re-selection from E-UTRAN to HRPD is that the UE has previously established a presence in the target HRPD network, either through the pre-registration procedure or previous HRPD attachment.



Samsung Exhibit 1015, Page 82 of 198
Samsung Electronics Co., Ltd. v. Asus Technology Licensing Inc.
IPR2024-01217

For the "Non-optimized Handover" in [19], the above pre-condition does not apply.

The UE performs Cell re-selection to HRPD while in RRC_IDLE.

Cell reselection from E-UTRAN to HRPD should be aligned with 3GPP inter RAT cell reselection mechanism.

##### 10.3.2.2.1.5 E-UTRAN to HRPD Handover

The pre-condition for the E-UTRAN to HRPD Handover procedure is that the UE is attached in the E-UTRAN network in E-UTRAN_ACTIVE state and has pre-registered with the HRPD network. Based on measurement reports received from the UE the eNB initiates a handover by sending an RRC HANDOVER FROM E-UTRA PREPARATION REQUEST message to the UE to indicate to the UE that it should begin the handover procedure. This message shall include the specified target RAT type and any cdma2000 specific HRPD parameters needed by the UE to create the appropriate HRPD messages needed to request a connection. Upon reception of this message the UE should begin handover signalling towards the HRPD access. The HRPD handover signalling is tunnelled through E-UTRAN between the UE and HRPD network. These HRPD parameters and HRPD messages are transparent to E-UTRAN. The set of the required HRPD parameters are out of scope of this specification.

The messages are transferred inside RRC transfer messages and S1 CDMA2000 tunnelling messages. The MME will, based on indication provided by the HRPD network, get information about if the handover succeeded or failed making it possible for the MME set the handover status in the S1 CDMA2000 tunnelling messages (e.g. handover success, handover failure). In case the handover succeeded E-UTRAN will include the tunnelled "CDMA2000 handover command", which will be sent to the UE, inside the RRC MOBILITY FROM E-UTRA message.

The UE can continue to send and receive data on the E-UTRAN radio until it receives the RRC MOBILITY FROM E-UTRA message including a tunnelled "CDMA2000 handover command". After this message is received by the UE, the UE shall leave the E-UTRAN radio and start acquiring the HRPD traffic channel. The HRPD handover signalling is tunnelled between the UE and HRPD network.

#### 10.3.2.2.2 Mobility from HRPD to E-UTRAN

Mobility from HRPD to E-UTRAN has no impact on the E-UTRAN.

### 10.3.2.3 Mobility between E-UTRAN and cdma2000 1xRTT

#### 10.3.2.3.1 Mobility from E-UTRAN to cdma2000 1xRTT

##### 10.3.2.3.1.1 cdma2000 1xRTT System Information Transmission in E-UTRAN

The cdma2000 1xRTT system information block (SIB) shall be sent on E-UTRAN BCCH. The UE shall monitor the E-UTRAN BCCH during the RRC_IDLE and RRC_CONNECTED modes to retrieve the 1xRTT system information for the preparation of handover from the E-UTRAN to cdma2000 1xRTT system. 1xRTT system information may also be provided to the UE by means of dedicated signalling. The 1xRTT system information contains 1xRTT neighbouring cell information, cdma timing information, and 1xRTT CS Fallback information.

##### 10.3.2.3.1.2 Measuring cdma2000 1xRTT from E-UTRAN

Measurement events and parameters for 1xRTT measurements are to be aligned with those defined in section 10.2.3.

###### 10.3.2.3.1.2.1 Idle Mode Measurement Control

UE shall be able to make measurements on the 1xRTT system cells in LTE_IDLE mode to perform cell re-selection. UE shall perform cdma2000 1xRTT neighbour cell measurements during DRX periods, between paging occasions.

The intra-3GPP inter-RAT idle mode measurement control is re-used to control the idle mode measurements on cdma2000 1xRTT. The UE performs measurement on cdma2000 1xRTT when the signal quality from E-UTRAN serving cell falls below a given threshold.

###### 10.3.2.3.1.2.2 Active Mode Measurement Control

In the E-UTRAN network, in RRC_CONNECTED mode, the UE shall perform radio measurements on the cdma2000 1xRTT network when directed by the E-UTRAN network. The network provides the required cdma2000 1xRTT neighbour cell list information and measurement controls to the UE through dedicated RRC signalling. When needed the eNB is responsible for configuring and activating the cdma2000 1xRTT measurements on the UE via the dedicated



Samsung Exhibit 1015, Page 83 of 198
Samsung Electronics Co., Ltd. v. Asus Technology Licensing Inc.
IPR2024-01217

RRC signalling message. As for intra-3GPP inter-RAT measurement reporting, periodic and event-triggered measurements are supported.

For single-radio terminals, measurement gaps are needed to allow the UE to switch into the cdma2000 1xRTT network and do radio measurements. These Measurement gaps are network-controlled. The eNB is responsible for configuring the gap pattern and providing it to the UE through RRC dedicated signalling. Terminals with a dual receiver perform measurements on cdma2000 1xRTT neighbour cells without tuning away from the E-UTRAN network. No DL gap patterns will be required for UEs which are capable of simultaneous reception on the involved frequency bands. No UL gap patterns will be required for UEs which are capable simultaneous transmission in one access and measuring on another access.

##### 10.3.2.3.1.2.3 Active Mode Measurement

In RRC_CONNECTED mode, the UE measures the strengths of each of the cdma2000 1xRTT neighbour cells and reports them in an RRC Message.

#### 10.3.2.3.1.3 E-UTRAN to cdma2000 1xRTT Cell Re-selection

UE performs Cell re-selection to cdma2000 1xRTT while in RRC_IDLE.

Cell reselection from E-UTRAN to 1xRTT should be aligned with 3GPP inter RAT cell reselection mechanism.

#### 10.3.2.3.1.4 E-UTRAN to cdma2000 1xRTT Handover

In the high level procedure for handover from E-UTRAN to cdma2000 1xRTT except 1xRTT CS Fallback, registration and handover is performed directly after the handover decision has been made. Based on measurement reports received from the UE the eNB initiates a handover by sending a RRC HANDOVER FROM E-UTRA PREPARATION REQUEST message to the UE to indicate to the UE that it should begin the handover procedure. This message shall include the specified target RAT type and any cdma2000 specific 1xRTT access parameters needed by the UE to create the appropriate 1xRTT Origination Request message. The 1xRTT handover signalling is tunnelled between the UE and 1xRTT network. The 1xRTT access parameters and 1xRTT messages are transparent to E-UTRAN. The set of the required 1xRTT access parameters are out of scope of this specification.

The messages are transferred inside RRC transfer messages and S1 CDMA2000 tunnelling messages. The MME will, based on indication provided by the 1xRTT network, get information about if the handover succeeded or failed making it possible for the MME set the handover status in the S1 CDMA2000 tunnelling messages (e.g. handover success, handover failure). In case the handover succeeded E-UTRAN will include the tunnelled “CDMA2000 handover command”, which will be sent to the UE, inside the RRC MOBILITY FROM E-UTRA message.

The UE can continue to send and receive data on the E-UTRAN radio until it receives the RRC MOBILITY FROM E-UTRA message including a tunnelled “CDMA2000 handover command”. After this message is received by the UE, the UE shall leave the E-UTRAN radio and start acquiring the 1xRTT traffic channel.

### 10.3.2.3.2 Mobility from cdma2000 1xRTT to E-UTRAN

Mobility from cdma2000 1xRTT has no impact on E-UTRAN.

### 10.3.2.3.3 1xRTT CS Fallback

CS fallback to 1xRTT enables the delivery of CS-domain services when a UE is being served by the E-UTRAN [23].

The UE initiates 1xCSFB (e.g. to perform a 1xCS call origination or accept a 1xCS call termination) by using NAS signalling to send a CSFB indication to the MME. The MME then indicates to the eNB that 1xCSFB is required, which triggers the eNB to execute one of the following 1xCSFB procedures depending on network support and UE capability:

- Rel-8 1xCSFB, characterized by RRC connection release with redirection to 1xRTT;
- enhanced 1xCSFB, characterized by 1xRTT handover signalling tunnelled between the UE and 1xRTT network;
- dual receiver 1xCSFB, characterized by RRC connection release without redirection information; or
- dual receiver/transmitter enhanced 1xCSFB, characterized by either 1xRTT handover signalling tunnelled between the UE and 1xRTT network, or redirection of the UE’s second radio to 1xRTT.



Samsung Exhibit 1015, Page 84 of 198
Samsung Electronics Co., Ltd. v. Asus Technology Licensing Inc.
IPR2024-01217

The network advertises its support for Rel-8 1xCSFB by broadcasting 1xRTT pre-registration parameters in system information (SIB8). The Rel-8 1xCSFB procedure is the default procedure, when neither enhanced 1xCSFB nor dual receiver 1xCSFB can be performed (i.e. because neither are supported by both network and UE). If Rel-8 1xCSFB is to be performed, the eNB optionally solicits 1xRTT measurements from the UE, and then sends an RRC Connection Release message with redirection to 1xRTT. The UE then performs the normal 1xCS call origination or termination procedure in the 1xRTT access network.

A network which advertises support for Rel-8 1xCSFB may also support enhanced 1xCSFB, in which case the eNB determines to perform enhanced 1xCSFB based on UE capability. If enhanced 1xCSFB is to be performed, the eNB optionally solicits 1xRTT measurements from the UE, and then sends it a Handover From EUTRA Preparation Request message. This triggers the UE to send the UL Handover Preparation Transfer message containing 1xRTT dedicated information. The 1xRTT information is contained inside RRC and S1-AP messages between the UE and MME and in a generic "transfer" message between MME and 1xRTT network. The response from the 1xRTT network triggers the eNB to send a Mobility From EUTRA Command message which includes a 1xRTT channel assignment message that causes the UE to acquire a traffic channel in the 1xRTT access network. In addition to enhanced 1xCSFB, the eNB may determine to perform concurrent mobility to HRPD based on UE capability; if so, then two separate UL Handover Preparation Transfer messages are triggered from the UE containing 1xRTT and HRPD dedicated information, respectively. The concurrent HRPD handover procedure is handled independently from the e1xCSFB procedure, except that responses from the 1xRTT and HRPD networks shall be combined by the eNB into a single Mobility From EUTRA Command message.

The network advertises support for dual receiver 1xCSFB by broadcasting the dual receiver 1xCSFB support indicator in system information (SIB8). The eNB determines to perform dual receiver 1xCSFB if the UE has a dual Rx configuration according to UE capability, and enhanced 1xCSFB cannot be performed (i.e. because enhanced 1xCSFB is not supported by both network and UE). If dual receiver 1xCSFB is to be performed, the eNB sends an RRC Connection Release message without including redirection information. The UE then performs the normal 1xCS call origination or termination procedure in the 1xRTT access network. A UE with dual Rx configuration may initiate 1xCSFB to a network broadcasting 1xRTT pre-registration parameters but not broadcasting the dual receiver 1xCSFB support indicator; in this case, the UE may receive an RRC Connection Release message with redirection to 1xRTT.

The network advertises support for dual receiver/transmitter enhanced 1xCSFB (dual Rx/Tx e1xCSFB) by broadcasting the dual Rx/Tx e1xCSFB support indicator in system information (SIB8). The eNB determines to perform dual Rx/Tx e1xCSFB if the UE has a dual Rx/Tx configuration, supports enhanced 1xCSFB according to UE capability, and belongs to Release-10 or later. If the network does not advertise support for dual Rx/Tx e1xCSFB, UE which have dual Rx/Tx configuration may decide to keep the 1xRTT receiver/transmitter turned on in order to continuously operate in both 1xRTT and E-UTRAN. If dual Rx/Tx e1xCSFB is to be performed, the eNB optionally solicits 1xRTT measurements from the UE, and then sends a Handover From EUTRA Preparation Request message. This triggers the UE to perform one of the following:

- send the UL Handover Preparation Transfer message containing 1xRTT dedicated information. The 1xRTT information is contained inside RRC and S1-AP messages between the UE and MME and in a generic "transfer" message between MME and 1xRTT network. The response from the 1xRTT network triggers the eNB to send a DL Information Transfer message which includes a 1xRTT channel assignment message that causes the UE to acquire a traffic channel in the 1xRTT access network while continuing to be served by the E-UTRAN (for PS-domain services).

- direct its second radio to 1xRTT, where it performs the 1xCS call origination or termination procedure in the 1xRTT access network while continuing to be served by the E-UTRAN (for PS-domain services).

The following table summarizes the various CS fallback options for 1xRTT, necessary UE capabilities and FGI index which should be set to ‘1’. The meaning of FGI index is specified in [16, Annex B].



Samsung Exhibit 1015, Page 85 of 198
Samsung Electronics Co., Ltd. v. Asus Technology Licensing Inc.
IPR2024-01217

**Table 10.3.2.3.3-1: CS fallback options**

| Target RAT | Solutions | Release | UE Capability | FGI Index |
|---|---|---|---|---|
| CS fallback to 1xRTT | RRC Connection Release with Redirection | Rel-8 | (NOTE 1)<br>Mandatory for UEs supporting CS fallback to 1xRTT | |
| | enhanced 1xCSFB | Rel-9 | (NOTE 1)<br>e-CSFB-1XRTT | |
| | enhanced 1xCSFB with concurrent HRPD handover | Rel-9 | (NOTE 1)<br>e-CSFB-ConcPS-Mob1XRTT, Support of HRPD, supportedBandListHRPD | FGI12, FGI26 |
| | dual receiver 1xCSFB (RRC Connection Release without Redirection) | Rel-9 | (NOTE 1)<br>rx-Config1XRTT (set to 'dual') | |
| | dual receiver/transmitter enhanced 1xCSFB | Rel-10 | (NOTE 1)<br>e-CSFB-1XRTT, rx-Config1XRTT (set to 'dual'), tx-Config1XRTT (set to 'dual') | |
| NOTE 1: All CS fallback to 1xRTT capable UE shall indicate that it supports 1xRTT and supported band list in the UE capability.<br>NOTE 2: The measurement may be performed before any of the above CS fallback solution is triggered to select the target cell or frequency layer more accurately based on eNB decision. eNB may trigger any of above CS fallback solutions blindly. | | | | |

#### 10.3.2.3.3.1 Pre-registration Procedure for 1xRTT CSFB

A 1xCSFB capable terminal may pre-register in the 1xRTT network via the E-UTRAN in order to establish CS services (e.g. originating and terminating voice calls) in the 1xRTT network. Pre-registration applies only to Rel-8 1xCSFB and enhanced 1xCSFB. It does not apply to dual receiver 1xCSFB, since the UE registers directly in the 1xRTT network using the normal 1xCS registration procedure.

The UE determines whether pre-registration is needed based on 1xRTT pre-registration parameters broadcast in system information (SIB8). Before performing a 1xRTT pre-registration, the UE requests from the eNB the necessary information to perform the 1xRTT pre-registration using the CDMA2000 CSFB Parameters Request message. The eNB provides the necessary parameters in the CDMA2000 CSFB Parameters Response message. These necessary parameters are pre-configured in the eNB and are transparent to E-UTRAN.

The UE is responsible for maintaining the 1xRTT context, e.g. by performing re-registrations if needed. The UE will use the 1xRTT pre-registration information to decide whether a re-registration shall be performed. A dual receiver UE which registers directly in the 1xRTT network can ignore these parameters. Re-registrations are only allowed in areas where pre-registration is allowed.

The management of the pre-registration and re-registration is handled by the 1xRTT upper layer in the UE.

## 10.4 Area Restrictions

The area restriction information for a UE includes the Serving PLMN, and may include a list of equivalent PLMNs, and information on which area restrictions are to be applied during ECM-CONNECTED state. It may be provided by the MME at context setup over the S1 interface, and may be updated by the MME during S1 Handover, and when sending NAS Downlink messages.

The eNB shall store the UE area restriction information and use it to determine whether the UE has access to radio resources in the E-UTRAN and/or other RANs. The source eNB should apply restriction handling when selecting a target cell, if applicable [17] [23].

The available UE area restriction information shall be propagated by the source eNB over X2 at intra E-UTRAN handover. For the case when the X2 handover results in a change of serving PLMN (to an equivalent PLMN), the



Samsung Exhibit 1015, Page 86 of 198
Samsung Electronics Co., Ltd. v. Asus Technology Licensing Inc.
IPR2024-01217

source eNB shall replace the Serving PLMN with the identity of the target PLMN and move the Serving PLMN to the equivalent PLMN list, before propagating the UE area restriction information.

# 10.5 Mobility to and from CSG and Hybrid cells

## 10.5.0 Principles for idle-mode mobility with CSG cells

### 10.5.0.1 Intra-frequency mobility

Intra-frequency mobility in idle mode in the presence of "allowed" CSG cells (*i.e.*, CSG cells that the UE is allowed to camp on) is based on cell ranking and reselection using the "best cell principle": For cell ranking and reselection, the UE may ignore all CSG cells that are known by the UE to be not allowed.

### 10.5.0.2 Inter-frequency mobility

For cell ranking and reselection, the UE should prioritize CSG cells with CSG ID present in the UE's CSG whitelist, irrespective of normal network configured frequency priorities.

### 10.5.0.3 Inter-RAT Mobility

Inter-RAT inbound mobility to E-UTRAN CSG cells is also supported by a UE autonomous search when the UE is camped on a RAT other than E-UTRAN. The UE requirements are defined in the specifications of the concerned RAT.

## 10.5.1 Inbound mobility to CSG cells

### 10.5.1.1 RRC_IDLE

Cell selection/reselection to CSG cells is based on a UE autonomous search function. The search function determines itself when/where to search, and need not be assisted by the network with information about frequencies which are dedicated to CSG cells.

To assist the search function on mixed carriers, all CSG cells on mixed carriers broadcast in system information a range of PCI values reserved by the network for use by CSG cells. Optionally also non-CSG cells on the mixed carrier can send this information in system information. The reserved PCI range is only applicable to the frequency of the PLMN where the UE received this information. The UE considers the last received reserved range of PCI values for CSG cells to be valid for a maximum of 24 hours within the entire PLMN. UE's use of the received PCI split information is UE implementation dependent.

UE checks the suitability of CSG cells (identified by the 1 bit indicator) based on the CSG whitelist in the UE (provided by upper layers). A CSG cell is only suitable for a UE if it belongs to its CSG whitelist.

The automated searching for the CSG cells by the UE shall be disabled by the search function, if the CSG whitelist configured in the UE is empty.

In addition, manual selection of CSG cells is supported.

Cell selection/reselection to CSG cells does not require the network to provide neighbour cell information to the UE. The neighbour cell information can be provided to help the UE in specific cases, e.g. where the network wishes to trigger the UE to search for CSG cells.

Cell Reselection between allowed CSG cells is based on normal cell reselection procedure.

### 10.5.1.2 RRC_CONNECTED

While the UE is in RRC_CONNECTED state, the UE performs normal measurement and mobility procedures based on configuration provided by the network.

The UE is not required to support manual selection of CSG IDs while in RRC_CONNECTED state.



Samsung Exhibit 1015, Page 87 of 198
Samsung Electronics Co., Ltd. v. Asus Technology Licensing Inc.
IPR2024-01217

Handover to a HNB/HeNB follows the framework of UE assisted network controlled handover as described in 10.1.2.1. Handover to a HNB/HeNB is different from the normal handover procedure in three aspects:

1. **Proximity Estimation**: in case the UE is able to determine, using autonomous search procedures, that it is near a CSG or hybrid cell whose CSG ID is in the UE's CSG whitelist, the UE may provide to the source eNB an indication of proximity. The proximity indication may be used as follows:
   - If a measurement configuration is not present for the concerned frequency/RAT, the source eNB may configure the UE to perform measurements and reporting for the concerned frequency/RAT.
   - The source eNB may determine whether to perform other actions related to handover to HNB/HeNBs based on having received a proximity indication (for example, the source eNB may not configure the UE to acquire system information of the HNB/HeNB unless it has received a proximity indication).
2. **PSC/PCI Confusion:** due to the typical cell size of HNB/HeNBs being much smaller than macro cells, there can be multiple HNBs/HeNBs within the coverage of the source eNB that have the same PSC/PCI. This leads to a condition referred to as PSC/PCI confusion, wherein the source eNB is unable to determine the correct target cell for handover from the PSC/PCI included in the measurement reports from the UE. PSC/PCI confusion is solved by the UE reporting the global cell identity of the target HNB/HeNB.
3. **Access Control:** if the target cell is a hybrid cell, prioritization of allocated resources may be performed based on the UE's membership status. Access control is done by a two step process, where first the UE reports the membership status based on the CSG ID received from the target cell and the UE's CSG whitelist, and then the network verifies the reported status.

Mobility from eNB/HeNB to a HeNB's CSG/hybrid cell takes place with the S1 Handover procedure. In the following call flow the source cell can be an eNB or a HeNB.

The procedure applies to any scenario where the CSG ID is provided by the UE or provided by the source eNB.

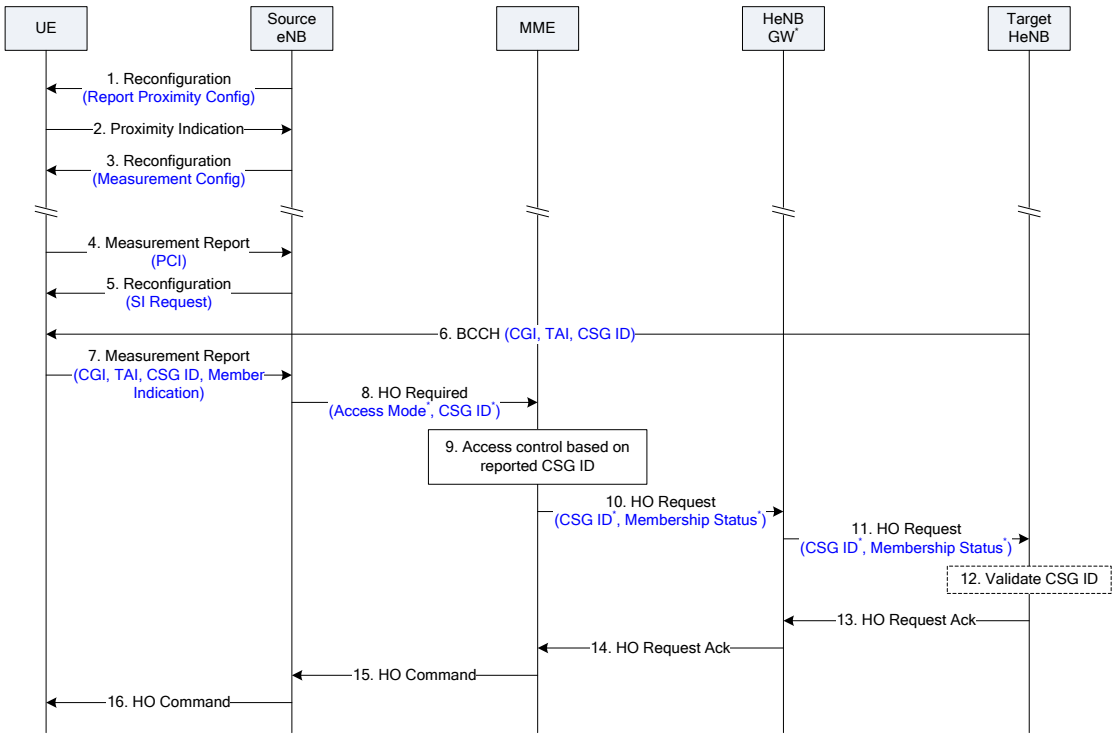


**Figure 10.5.1.2-1: Mobility to HeNB's CSG and hybrid cells.**

1) The source eNB configures the UE with proximity indication control.

2) The UE sends an "entering" proximity indication when it determines it may be near a cell (based on autonomous search procedures) whose CSG ID is in the UE's CSG whitelist. The proximity indication includes the RAT and frequency of the cell.



Samsung Exhibit 1015, Page 88 of 198
Samsung Electronics Co., Ltd. v. Asus Technology Licensing Inc.
IPR2024-01217

3) If a measurement configuration is not present for the concerned frequency/RAT the source eNB configures the UE with relevant measurement configuration including measurement gaps as needed, so that the UE can perform measurements on the reported RAT and frequency. The network may also use the proximity indication to minimize the requesting of handover preparation information of CSG/hybrid cells by avoiding requesting such information when the UE is not in the geographical area where cells whose CSG IDs are in the UEs CSG White-list are located.

4) The UE sends a measurement report including the PCI (e.g., due to triggered event A3).

5) The source eNB configures the UE to perform SI acquisition and reporting of a particular PCI.

6) The UE performs SI acquisition using autonomous gaps, i.e., the UE may suspend reception and transmission with the source eNB within the limits defined in [TS 36.133] to acquire the relevant system information from the target HeNB.

7) The UE sends a measurement report including (E-)CGI, TAI, CSG ID and "member/non-member" indication.

8) The source eNB includes the target E-CGI and the CSG ID in the Handover Required message sent to the MME. If the target is a hybrid cell the Cell Access Mode of the target is included.

9) The MME performs UE access control to the CSG cell based on the CSG ID received in the Handover Required message and the stored CSG subscription data for the UE. If the access control procedure fails, the MME ends the handover procedure by replying with the Handover Preparation Failure message. If the Cell Access Mode is present, the MME determines the CSG Membership Status of the UE handing over to the hybrid cell and includes it in the Handover Request message.

10-11) The MME sends the Handover Request message to the target HeNB including the target CSG ID received in the Handover Required message. If the target is a hybrid cell the CSG Membership Status will be included in the Handover Request message.

12) The target HeNB verifies that the CSG ID received in the Handover Request message matches the CSG ID broadcast in the target cell and if such validation is successful it allocates appropriate resources. UE prioritisation may also be applied if the CSG Membership Status indicates that the UE is a member.

13-14) The target HeNB sends the Handover Request Acknowledge message to the MME via the HeNB GW if present.

15) The MME sends the Handover Command message to the source eNB.

16) The source eNB transmits the Handover Command (RRC Connection Reconfiguration message including mobility control information) to the UE.

NOTE: Steps 1-9, 15 and 16 also apply to inter-RAT mobility from LTE to HNB.

After sending an "entering" proximity indication (step 2), if the UE determines that it is no longer near a cell whose CSG ID is in the UE's CSG whitelist, the UE sends a "leaving" proximity indication to the source eNB. Upon reception of this indication, the source eNB may reconfigure the UE to stop measurements on the reported RAT and frequency.

In the above procedure, steps 2 and 3 may not be performed in case the UE has not previously visited the HeNB, e.g., when the UE first visits a hybrid cell.

The PCI confusion is resolved by steps 5, 6 and 7. The source eNB can request SI acquisition and reporting for any PCI, not limited to PSCs/PCIs of CSG or hybrid cells.

## 10.5.2 Outbound mobility from CSG cells

### 10.5.2.1 RRC_IDLE

For a UE leaving a CSG cell in idle mode normal cell reselection based on configuration from the BCCH of the CSG cell applies.



Samsung Exhibit 1015, Page 89 of 198
Samsung Electronics Co., Ltd. v. Asus Technology Licensing Inc.
IPR2024-01217

#### 10.5.2.2 RRC_CONNECTED

For a UE leaving a CSG cell in active mode normal network controlled mobility applies.

## 10.6 Measurement Model

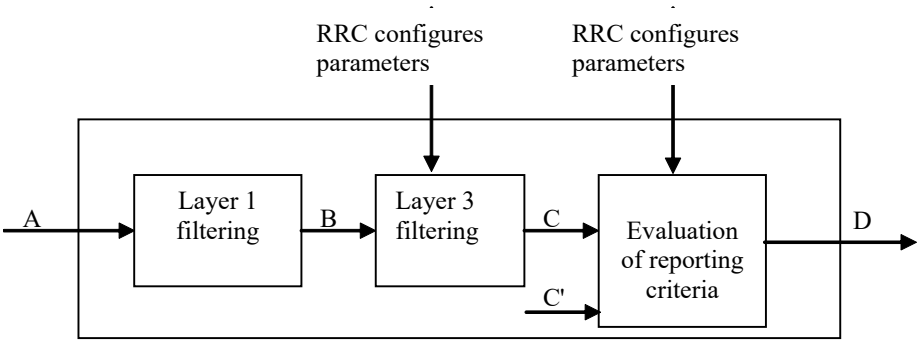


**Figure 10.6-1: Measurement model**

- **A:** measurements (samples) internal to the physical layer.
- **Layer 1 filtering:** internal layer 1 filtering of the inputs measured at point A. Exact filtering is implementation dependant. How the measurements are actually executed in the physical layer by an implementation (inputs A and Layer 1 filtering) in not constrained by the standard.
- **B:** A measurement reported by layer 1 to layer 3 after layer 1 filtering.
- **Layer 3 filtering:** Filtering performed on the measurements provided at point B. The behaviour of the Layer 3 filters are standardised and the configuration of the layer 3 filters is provided by RRC signalling. Filtering reporting period at C equals one measurement period at B.
- **C:** A measurement after processing in the layer 3 filter. The reporting rate is identical to the reporting rate at point B. This measurement is used as input for one or more evaluation of reporting criteria.
- **Evaluation of reporting criteria:** This checks whether actual measurement reporting is necessary at point D. The evaluation can be based on more than one flow of measurements at reference point C e.g. to compare between different measurements. This is illustrated by input C and C'. The UE shall evaluate the reporting criteria at least every time a new measurement result is reported at point C, C'. The reporting criteria are standardised and the configuration is provided by RRC signalling (UE measurements).
- **D:** Measurement report information (message) sent on the radio interface.

Layer 1 filtering will introduce a certain level of measurement averaging. How and when the UE exactly performs the required measurements will be implementation specific to the point that the output at B fulfils the performance requirements set in [21]. Layer 3 filtering and parameters used is specified in [16] and does not introduce any delay in the sample availability between B and C. Measurement at point C, C' is the input used in the event evaluation.

## 10.7 Hybrid Cells

Hybrid Cells have a CSG Indication bit set to FALSE but broadcast a CSG Identity and the PCI values for hybrid cells are not contained within the reserved PCI range for CSG cells. Similar to CSG cells, the network can reserve a PCI list for hybrid cells.

The network shall distinguish whether it is a hybrid cell, e.g. by reserving a PCI list for hybrid cells.

### 10.7.1 RRC_IDLE

When the CSG ID of the hybrid cell belongs to the CSG whitelist of the UE, the hybrid cell is considered by the UE as a CSG cell in idle mode cell selection/reselection procedures.



Samsung Exhibit 1015, Page 90 of 198
Samsung Electronics Co., Ltd. v. Asus Technology Licensing Inc.
IPR2024-01217

NOTE: The autonomous search for hybrid cells does not imply that a UE needs to constantly check the CSG ID of all cells it sees.

For all other UEs, normal cell selection/reselection procedures apply with hybrid cells (as for non CSG cells).

Manual selection of CSG IDs of hybrid cells is also supported in the same way as for CSG cells.

### 10.7.2 RRC_CONNECTED

#### 10.7.2.1 Inbound Mobility

Inbound mobility to hybrid cells is described in Section 10.5.1.2.

#### 10.7.2.2 Outbound Mobility

Procedure for outbound mobility from CSG cells applies (See section 10.5.2.2).

# 11 Scheduling and Rate Control

In order to utilise the SCH resources efficiently, a scheduling function is used in MAC. In this subclause, an overview of the scheduler is given in terms of scheduler operation, signalling of scheduler decisions, and measurements to support scheduler operation.

## 11.1 Basic Scheduler Operation

MAC in eNB includes dynamic resource schedulers that allocate physical layer resources for the DL-SCH and UL-SCH transport channels. Different schedulers operate for the DL-SCH and UL-SCH.

The scheduler should take account of the traffic volume and the QoS requirements of each UE and associated radio bearers, when sharing resources between UEs. Only “per UE” grants are used to grant the right to transmit on the UL-SCH (i.e. there are no “per UE per RB” grants).

Schedulers may assign resources taking account the radio conditions at the UE identified through measurements made at the eNB and/or reported by the UE.

Radio resource allocations can be valid for one or multiple TTIs.

Resource assignment consists of physical resource blocks (PRB) and MCS. Allocations for time periods longer than one TTI might also require additional information (allocation time, allocation repetition factor…).

When CA is configured, a UE may be scheduled over multiple serving cells simultaneously but at most one random access procedure shall be ongoing at any time. Cross-carrier scheduling with the Carrier Indicator Field (CIF) allows the PDCCH of a serving cell to schedule resources on another serving cell but with the following restrictions:

- Cross-carrier scheduling does not apply to PCell i.e. PCell is always scheduled via its PDCCH;
- When the PDCCH of an SCell is configured, cross-carrier scheduling does not apply to this SCell i.e. it is always scheduled via its PDCCH;
- When the PDCCH of an SCell is not configured, cross-carrier scheduling applies and this SCell is always scheduled via the PDCCH of one other serving cell.

A linking between UL and DL allows identifying the serving cell for which the grant applies when the CIF is not present:

- DL assignment received in PCell corresponds to downlink transmission in PCell;
- UL grant received in PCell corresponds to uplink transmission in PCell;
- DL assignment received on in $SCell_n$ corresponds to downlink transmission on in $SCell_n$;



Samsung Exhibit 1015, Page 91 of 198
Samsung Electronics Co., Ltd. v. Asus Technology Licensing Inc.
IPR2024-01217

- UL grant received in $SCell_n$ corresponds to uplink transmission in $SCell_n$. If $SCell_n$ is not configured for uplink usage by the UE, the grant is ignored by the UE.

### 11.1.1 Downlink Scheduling

In the downlink, E-UTRAN can dynamically allocate resources (PRBs and MCS) to UEs at each TTI via the C-RNTI on PDCCH(s). A UE always monitors the PDCCH(s) in order to find possible allocation when its downlink reception is enabled (activity governed by DRX when configured). When CA is configured, the same C-RNTI applies to all serving cells.

In addition, E-UTRAN can allocate semi-persistent downlink resources for the first HARQ transmissions to UEs:

- RRC defines the periodicity of the semi-persistent downlink grant;
- PDCCH indicates whether the downlink grant is a semi-persistent one i.e. whether it can be implicitly reused in the following TTIs according to the periodicity defined by RRC.

When required, retransmissions are explicitly signalled via the PDCCH(s). In the sub-frames where the UE has semi-persistent downlink resource, if the UE cannot find its C-RNTI on the PDCCH(s), a downlink transmission according to the semi-persistent allocation that the UE has been assigned in the TTI is assumed. Otherwise, in the sub-frames where the UE has semi-persistent downlink resource, if the UE finds its C-RNTI on the PDCCH(s), the PDCCH allocation overrides the semi-persistent allocation for that TTI and the UE does not decode the semi-persistent resources.

When CA is configured, semi-persistent downlink resources can only be configured for the PCell and only PDCCH allocations for the PCell can override the semi-persistent allocation.

### 11.1.2 Uplink Scheduling

In the uplink, E-UTRAN can dynamically allocate resources (PRBs and MCS) to UEs at each TTI via the C-RNTI on PDCCH(s). A UE always monitors the PDCCH(s) in order to find possible allocation for uplink transmission when its downlink reception is enabled (activity governed by DRX when configured). When CA is configured, the same C-RNTI applies to all serving cells.

In addition, E-UTRAN can allocate a semi-persistent uplink resource for the first HARQ transmissions and potentially retransmissions to UEs:

- RRC defines the periodicity of the semi-persistent uplink grant;
- PDCCH indicates whether the uplink grant is a semi-persistent one i.e. whether it can be implicitly reused in the following TTIs according to the periodicity defined by RRC.

In the sub-frames where the UE has semi-persistent uplink resource, if the UE cannot find its C-RNTI on the PDCCH(s), an uplink transmission according to the semi-persistent allocation that the UE has been assigned in the TTI can be made. The network performs decoding of the pre-defined PRBs according to the pre-defined MCS. Otherwise, in the sub-frames where the UE has semi-persistent uplink resource, if the UE finds its C-RNTI on the PDCCH(s), the PDCCH allocation overrides the persistent allocation for that TTI and the UE's transmission follows the PDCCH allocation, not the semi-persistent allocation. Retransmissions are either implicitly allocated in which case the UE uses the semi-persistent uplink allocation, or explicitly allocated via PDCCH(s) in which case the UE does not follow the semi-persistent allocation.

NOTE: there is no blind decoding in uplink and when the UE does not have enough data to fill the allocated resource, padding is used.

When the UE is provided with valid uplink grants in several serving cells in one TTI, the order in which the grants are processed during logical channel prioritisation and whether joint or serial processing is applied are left up to UE implementation.

Similarly as for the downlink, semi-persistent uplink resources can only be configured for the PCell and only PDCCH allocations for the PCell can override the semi-persistent allocation.



Samsung Exhibit 1015, Page 92 of 198
Samsung Electronics Co., Ltd. v. Asus Technology Licensing Inc.
IPR2024-01217

## 11.2 Activation/Deactivation Mechanism

To enable reasonable UE battery consumption when CA is configured, an activation/deactivation mechanism of SCells is supported (i.e. activation/deactivation does not apply to PCell). When an SCell is deactivated, the UE does not need to receive the corresponding PDCCH or PDSCH, cannot transmit in the corresponding uplink, nor is it required to perform CQI measurements. Conversely, when an SCell is active, the UE shall receive PDSCH and PDCCH (if the UE is configured to monitor PDCCH from this SCell), and is expected to be able to perform CQI measurements.

The activation/deactivation mechanism is based on the combination of a MAC control element and deactivation timers. The MAC control element carries a bitmap for the activation and deactivation of SCells: a bit set to 1 denotes activation of the corresponding SCell, while a bit set to 0 denotes deactivation. With the bitmap, SCells can be activated and deactivated individually, and a single activation/deactivation command can activate/deactivate a subset of the SCells. One deactivation timer is maintained per SCell but one common value is configured per UE by RRC.

At reconfiguration without mobility control information:

- SCells added to the set of serving cells are initially “deactivated”;
- SCells which remain in the set of serving cells (either unchanged or reconfigured) do not change their activation status (“activated” or “deactivated”).

At reconfiguration with mobility control information (i.e. handover):

- SCells are “deactivated”.

## 11.3 Measurements to Support Scheduler Operation

Measurement reports are required to enable the scheduler to operate in both uplink and downlink. These include transport volume and measurements of a UEs radio environment.

Uplink buffer status reports (BSR) are needed to provide support for QoS-aware packet scheduling. In E-UTRAN uplink buffer status reports refer to the data that is buffered in for a group of logical channel (LCG) in the UE. Four LCGs and two formats are used for reporting in uplink:

- A short format for which only one BSR (of one LCG) is reported;
- A long format for which all four BSRs (of all four LCGs) are reported.

Uplink buffer status reports are transmitted using MAC signalling.

## 11.4 Rate Control of GBR, MBR and UE-AMBR

### 11.4.1 Downlink

The eNB guarantees the downlink GBR associated with a GBR bearer, enforces the downlink MBR associated with a GBR bearer and enforces the downlink AMBR associated with a group of Non-GBR bearers.

### 11.4.2 Uplink

The UE has an uplink rate control function which manages the sharing of uplink resources between radio bearers. RRC controls the uplink rate control function by giving each bearer a priority and a prioritised bit rate (PBR). The values signalled may not be related to the ones signalled via S1 to the eNB.

The uplink rate control function ensures that the UE serves its radio bearer(s) in the following sequence:

1. All the radio bearer(s) in decreasing priority order up to their PBR;
2. All the radio bearer(s) in decreasing priority order for the remaining resources assigned by the grant.

NOTE1: In case the PBRs are all set to zero, the first step is skipped and the radio bearer(s) are served in strict priority order: the UE maximises the transmission of higher priority data.



Samsung Exhibit 1015, Page 93 of 198
Samsung Electronics Co., Ltd. v. Asus Technology Licensing Inc.
IPR2024-01217

NOTE2: By limiting the total grant to the UE, the eNB can ensure that the UE-AMBR is not exceeded.

If more than one radio bearer has the same priority, the UE shall serve these radio bearers equally.

## 11.5 CQI reporting for Scheduling

The time and frequency resources used by the UE to report CQI are under the control of the eNB. CQI reporting can be either periodic or aperiodic. A UE can be configured to have both periodic and aperiodic reporting at the same time. In case both periodic and aperiodic reporting occurs in the same subframe, only the aperiodic report is transmitted in that subframe.

For efficient support of localized, distributed and MIMO transmissions, E-UTRA supports three types of CQI reporting:

- Wideband type: providing channel quality information of entire system bandwidth of the cell;
- Multi-band type: providing channel quality information of some subset(s) of system bandwidth of the cell;
- MIMO type: open loop or closed loop operation (with or without PMI feedback).

Periodic CQI reporting is defined by the following characteristics:

- When the UE is allocated PUSCH resources in a subframe where a periodic CQI report is configured to be sent, the periodic CQI report is transmitted together with uplink data on the PUSCH. Otherwise, the periodic CQI reports are sent on the PUCCH.

Aperiodic CQI reporting is defined by the following characteristics:

- The report is scheduled by the eNB via the PDCCH;
- Transmitted together with uplink data on PUSCH.

When a CQI report is transmitted together with uplink data on PUSCH, it is multiplexed with the transport block by L1 (i.e. the CQI report is not part of the uplink the transport block).

The eNB configures a set of sizes and formats of the reports. Size and format of the report depends on whether it is transmitted over PUCCH or PUSCH and whether it is a periodic or aperiodic CQI report.

## 11.6 Explicit Congestion Notification

The eNB and the UE support of the Explicit Congestion Notification (ECN) is specified in Section 5 of [35] (i.e., the normative part of [35] that applies to the end-to-end flow of IP packets), and below. This enables the eNB to control the initial codec rate selection and/or to trigger a codec rate reduction. Thereby the eNB can increase capacity (e.g., in terms of number of accepted VoIP calls), and improve coverage (e.g. for high bit rate video sessions).

The eNB should set the Congestion Experienced (CE) codepoint ('11') in PDCP SDUs in the downlink direction to indicate downlink (radio) congestion if those PDCP SDUs have one of the two ECN-Capable Transport (ECT) codepoints set. The eNB should set the Congestion Experienced (CE) codepoint ('11') in PDCP SDUs in the uplink direction to indicate uplink (radio) congestion if those PDCP SDUs have one of the two ECN-Capable Transport (ECT) codepoints set.

# 12 DRX in RRC_CONNECTED

In order to enable reasonable UE battery consumption, DRX in E-UTRAN is characterised by the following:

- Per UE mechanism (as opposed to per radio bearer);
- No RRC or MAC substate to distinguish between different levels of DRX;
- Available DRX values are controlled by the network and start from non-DRX up to *x* seconds. Value *x* may be as long as the paging DRX used in ECM-IDLE;



Samsung Exhibit 1015, Page 94 of 198
Samsung Electronics Co., Ltd. v. Asus Technology Licensing Inc.
IPR2024-01217

- Measurement requirement and reporting criteria can differ according to the length of the DRX interval i.e. long DRX intervals may experience more relaxed requirements;
- Irrespective of DRX, UE may use first available RACH opportunity to send an UL measurement report;
- HARQ operation related to data transmission is independent of DRX operation and the UE wakes up to read the PDCCH for possible retransmissions and/or ACK/NAK signalling regardless of DRX In the downlink, a timer is used to limit the time the UE stays awake awaiting for a retransmission;
- When DRX is configured, the UE may be further configured with an "on-duration" timer during which time the UE monitors the PDCCHs for possible allocations;
- When DRX is configured, periodic CQI reports can only be sent by the UE during the “active-time”. RRC can further restrict periodic CQI reports so that they are only sent during the on-duration;
- A timer in the UE is used to detect need for obtaining timing advance.

The following definitions apply to DRX in E-UTRAN:

- **on-duration**: duration in downlink subframes that the UE waits for, after waking up from DRX, to receive PDCCHs. If the UE successfully decodes a PDCCH, the UE stays awake and starts the inactivity timer;
- **inactivity-timer**: duration in downlink subframes that the UE waits to successfully decode a PDCCH, from the last successful decoding of a PDCCH, failing which it re-enters DRX. The UE shall restart the inactivity timer following a single successful decoding of a PDCCH for a first transmission only (i.e. not for retransmissions).
- **active-time**: total duration that the UE is awake. This includes the “on-duration” of the DRX cycle, the time UE is performing continuous reception while the inactivity timer has not expired and the time UE is performing continuous reception while waiting for a DL retransmission after one HARQ RTT. Based on the above the minimum active time is of length equal to on-duration, and the maximum is undefined (infinite);

Of the above parameters the on-duration and inactivity-timer are of fixed lengths, while the active-time is of varying lengths based on scheduling decision and UE decoding success. Only on-duration and inactivity-timer duration are signalled to the UE by the eNB:

- There is only one DRX configuration applied in the UE at any time;
- UE shall apply an on-duration on wake-up from DRX sleep;

NOTE: this is also applicable for the case where the UE has only one service (e.g. Real Time) that is being handled through the allocation of predefined resources; this allows for other signalling such as RRC to be sent during the remaining portion of the active time.

- New transmissions can only take place during the active-time (so that when the UE is waiting for one retransmission only, it does not have to be “awake” during the RTT).
- If PDCCH has not been successfully decoded during the on-duration, the UE shall follow the DRX configuration (i.e. the UE can enter DRX sleep if allowed by the DRX configuration):
  - This applies also for the sub-frames where the UE has been allocated predefined resources.
- If it successfully decodes a PDCCH for a first transmission, the UE shall stay awake and start the inactivity timer (even if a PDCCH is successfully decoded in the sub-frames where the UE has also been allocated predefined resources) until a MAC control message tells the UE to re-enter DRX, or until the inactivity timer expires. In both cases, the DRX cycle that the UE follows after re-entering DRX is given by the following rules:
  - If a short DRX cycle is configured; the UE first follows the short DRX cycle and after a longer period of inactivity the UE follows the long DRX cycle;
  - Else the UE follows the long DRX cycle directly.

NOTE: When DRX is configured, the network should detect whether UE remains in EUTRAN coverage by requesting UE to send periodic signals to the network.



Samsung Exhibit 1015, Page 95 of 198
Samsung Electronics Co., Ltd. v. Asus Technology Licensing Inc.
IPR2024-01217

In CA, whenever a UE is configured with only one serving cell (i.e. PCell) Rel-8/9 DRX applies. In other cases, the same DRX operation applies to all configured and activated serving cells (i.e. identical active time for PDCCH monitoring).

# 13 QoS

An EPS bearer/E-RAB is the level of granularity for bearer level QoS control in the EPC/E-UTRAN. That is, SDFs mapped to the same EPS bearer receive the same bearer level packet forwarding treatment (e.g. scheduling policy, queue management policy, rate shaping policy, RLC configuration, etc.) [17].

One EPS bearer/E-RAB is established when the UE connects to a PDN, and that remains established throughout the lifetime of the PDN connection to provide the UE with always-on IP connectivity to that PDN. That bearer is referred to as the *default* bearer. Any additional EPS bearer/E-RAB that is established to the same PDN is referred to as a *dedicated* bearer. The initial bearer level QoS parameter values of the default bearer are assigned by the network, based on subscription data. The decision to establish or modify a dedicated bearer can only be taken by the EPC, and the bearer level QoS parameter values are always assigned by the EPC.

An EPS bearer/E-RAB is referred to as a GBR bearer if dedicated network resources related to a Guaranteed Bit Rate (GBR) value that is associated with the EPS bearer/E-RAB are permanently allocated (e.g. by an admission control function in the eNodeB) at bearer establishment/modification. Otherwise, an EPS bearer/E-RAB is referred to as a Non-GBR bearer. A dedicated bearer can either be a GBR or a Non-GBR bearer while a default bearer shall be a Non-GBR bearer.

## 13.1 Bearer service architecture

The EPS bearer service layered architecture is depicted in Figure 13.1-1 below, where:

- An UL TFT in the UE binds an SDF to an EPS bearer in the uplink direction. Multiple SDFs can be multiplexed onto the same EPS bearer by including multiple uplink packet filters in the UL TFT.
- A DL TFT in the PDN GW binds an SDF to an EPS bearer in the downlink direction. Multiple SDFs can be multiplexed onto the same EPS bearer by including multiple downlink packet filters in the DL TFT.
- An E-RAB transports the packets of an EPS bearer between the UE and the EPC. When an E-RAB exists, there is a one-to-one mapping between this E-RAB and an EPS bearer.
- A data radio bearer transports the packets of an EPS bearer between a UE and an eNB. When a data radio bearer exists, there is a one-to-one mapping between this data radio bearer and the EPS bearer/E-RAB.
- An S1 bearer transports the packets of an E-RAB between an eNodeB and a Serving GW.
- An S5/S8 bearer transports the packets of an EPS bearer between a Serving GW and a PDN GW.
- A UE stores a mapping between an uplink packet filter and a data radio bearer to create the binding between an SDF and a data radio bearer in the uplink.
- A PDN GW stores a mapping between a downlink packet filter and an S5/S8a bearer to create the binding between an SDF and an S5/S8a bearer in the downlink.
- An eNB stores a one-to-one mapping between a data radio bearer and an S1 bearer to create the binding between a data radio bearer and an S1 bearer in both the uplink and downlink.
- A Serving GW stores a one-to-one mapping between an S1 bearer and an S5/S8a bearer to create the binding between an S1 bearer and an S5/S8a bearer in both the uplink and downlink.



Samsung Exhibit 1015, Page 96 of 198
Samsung Electronics Co., Ltd. v. Asus Technology Licensing Inc.
IPR2024-01217

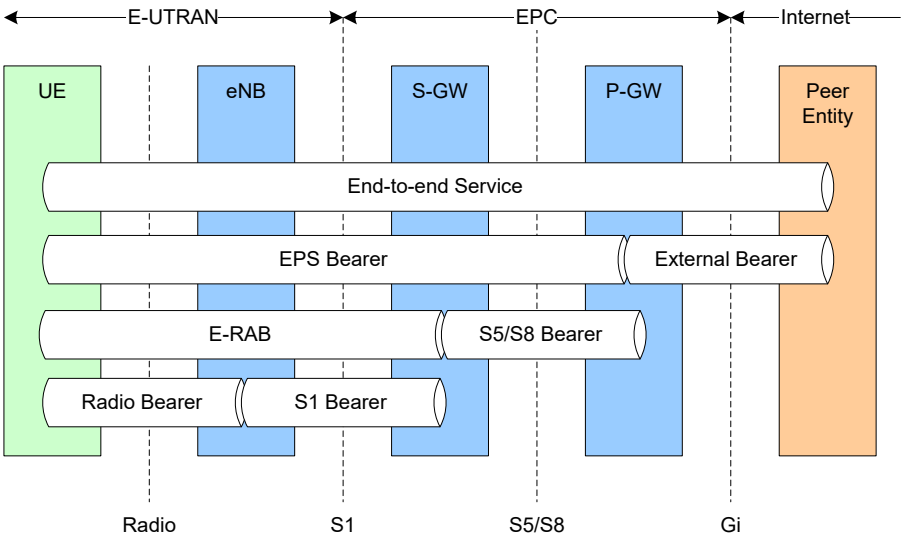


**Figure 13.1-1: EPS Bearer Service Architecture**

## 13.2 QoS parameters

The bearer level (i.e. per bearer or per bearer aggregate) QoS parameters are QCI, ARP, GBR, and AMBR [17]. Each EPS bearer/E-RAB (GBR and Non-GBR) is associated with the following bearer level QoS parameters:

- QoS Class Identifier (QCI): scalar that is used as a reference to access node-specific parameters that control bearer level packet forwarding treatment (e.g. scheduling weights, admission thresholds, queue management thresholds, link layer protocol configuration, etc.), and that have been pre-configured by the operator owning the eNodeB. A one-to-one mapping of standardized QCI values to standardized characteristics is captured in [17].

- Allocation and Retention Priority (ARP): the primary purpose of ARP is to decide whether a bearer establishment / modification request can be accepted or needs to be rejected in case of resource limitations. In addition, the ARP can be used by the eNodeB to decide which bearer(s) to drop during exceptional resource limitations (e.g. at handover).

Each GBR bearer is additionally associated with the following bearer level QoS parameter:

- Guaranteed Bit Rate (GBR): the bit rate that can be expected to be provided by a GBR bearer,

- Maximum Bit Rate (MBR): the maximum bit rate that can be expected to be provided by a GBR bearer. MBR can be greater or equal to the GBR.

Each APN access, by a UE, is associated with the following QoS parameter:

- per APN Aggregate Maximum Bit Rate (APN-AMBR).

Each UE in state EMM-REGISTERED is associated with the following bearer aggregate level QoS parameter:

- per UE Aggregate Maximum Bit Rate (UE-AMBR).

The definitions of APN AMBR and UE-AMBR are captured in [17].

The GBR and MBR denotes bit rate of traffic per bearer while UE-AMBR/APN-AMBR denote bit rate of traffic per group of bearers. Each of those QoS parameters has an uplink and a downlink component.

## 13.3 QoS support in Hybrid Cells

The following principles apply to serving non CSG members and CSG members of a Hybrid Cell:



Samsung Exhibit 1015, Page 97 of 198
Samsung Electronics Co., Ltd. v. Asus Technology Licensing Inc.
IPR2024-01217

Note: The term "eNB" in this section applies to HeNBs (as described in §4.6.1), as well as eNBs (as denoted in the basic E-UTRAN architecture in Figure 4-1).

- When the UE connects to a Hybrid Cell, the MME shall inform the eNB serving this Hybrid Cell whether the UE is a member or not of the CSG associated with this Hybrid Cell;
- Based on CSG membership, the offered QoS for UEs served by this Hybrid Cell may be modified as follows:
  - The eNB serving this Hybrid Cell may distinguish between a CSG member and non-member when determining whether to handover a UE, which GBR bearers to admit and which GBR bearers to deactivate;
  - The eNB serving this Hybrid Cell may distinguish between a CSG member and non-member for handover and packet scheduling on Uu interface (including reduced QoS) of non-GBR bearers.

# 14 Security

## 14.1 Overview and Principles

The following principles apply to E-UTRAN security:

- The keys used for NAS and AS protection shall be dependent on the algorithm with which they are used.
- The eNB keys are cryptographically separated from the EPC keys used for NAS protection (making it impossible to use the eNB key to figure out an EPC key).
- The AS (RRC and UP) and NAS keys are derived in the EPC/UE from key material that was generated by a NAS (EPC/UE) level AKA procedure ($K_{ASME}$) and identified with a key identifier ($KSI_{ASME}$).
- The eNB key ($K_{eNB}$) is sent from the EPC to the eNB when the UE is entering ECM-CONNECTED state (i.e. during RRC connection or S1 context setup).
- Separate AS and NAS level security mode command procedures are used. AS level security mode command procedure configures AS security (RRC and user plane) and NAS level security mode command procedure configures NAS security. Both integrity protection and ciphering for RRC are activated within the same AS SMC procedure, but not necessarily within the same message. User plane ciphering is activated at the same time as RRC ciphering.
- Keys stored inside eNBs shall never leave a secure environment within the eNB (except when done in accordance with this or other 3GPP specifications), and user plane data ciphering/deciphering shall take place inside the secure environment where the related keys are stored.
- Key material for the eNB keys is sent between the eNBs during ECM-CONNECTED intra-E-UTRAN mobility.
- A sequence number (COUNT) is used as input to the ciphering and integrity protection. A given sequence number must only be used once for a given eNB key (except for identical re-transmission) on the same radio bearer in the same direction. The same sequence number can be used for both ciphering and integrity protection.
- A hyper frame number (HFN) (i.e. an overflow counter mechanism) is used in the eNB and UE in order to limit the actual number of sequence number bits that is needed to be sent over the radio. The HFN needs to be synchronized between the UE and eNB.
- If corruption of keys is detected, UE has to restart radio level attachment procedure (e.g. similar radio level procedure to idle-to-connected mode transition or initial attachment).
- No integrity protection initialisation number (FRESH).
- Since SIM access is not granted in E-UTRAN [24] except for making IMS Emergency calls, idle mode UE not equipped with USIM shall not attempt to reselect to E-UTRAN unless it is originating an IMS Emergency call. The RNC may try to prevent handover to E-UTRAN for example by identifying a SIM based UE from the security keys provided by the CN.

A simplified key derivation is depicted on Figure 14.1-1 below, where:



Samsung Exhibit 1015, Page 98 of 198
Samsung Electronics Co., Ltd. v. Asus Technology Licensing Inc.
IPR2024-01217

- **$K_{NASint}$** is a key, which shall only be used for the protection of NAS traffic with a particular integrity algorithm This key is derived by UE and MME from $K_{ASME}$ , as well as an identifier for the integrity algorithm.
- **$K_{NASenc}$** is a key, which shall only be used for the protection of NAS traffic with a particular encryption algorithm. This key is derived by UE and MME from $K_{ASME}$, as well as an identifier for the encryption algorithm.
- **$K_{eNB}$** is a key derived by UE and MME from $K_{ASME}$. $K_{eNB}$ may also be derived by the target eNB from NH at handover. $K_{eNB}$ shall be used for the derivation of $K_{RRCint}$, $K_{RRCenc}$ and $K_{UPenc}$, and for the derivation of $K_{eNB*}$ upon handover.
- **$K_{eNB*}$** is a key derived by UE and source eNB from either $K_{eNB}$ or from a fresh NH. $K_{eNB*}$ shall be used by UE and target eNB as a new $K_{eNB}$ for RRC and UP traffic.
- **$K_{UPenc}$** is a key, which shall only be used for the protection of UP traffic with a particular encryption algorithm. This key is derived by UE and eNB from $K_{eNB}$, as well as an identifier for the encryption algorithm.
- **$K_{RRCint}$** is a key, which shall only be used for the protection of RRC traffic with a particular integrity algorithm. $K_{RRCint}$ is derived by UE and eNB from $K_{eNB}$, as well as an identifier for the integrity algorithm.
- **$K_{RRCenc}$** is a key, which shall only be used for the protection of RRC traffic with a particular encryption algorithm. $K_{RRCenc}$ is derived by UE and eNB from $K_{eNB}$ as well as an identifier for the encryption algorithm.
- Next Hop (**NH**) is used by UE and eNB in the derivation of $K_{eNB*}$ for the provision of "forward security" [22]. NH is derived by UE and MME from $K_{ASME}$ and $K_{eNB}$ when the security context is established, or from $K_{ASME}$ and previous NH, otherwise.
- Next Hop Chaining Count (**NCC**) is a counter related to NH (i.e. the amount of Key chaining that has been performed) which allow the UE to be synchronised with the eNB and to determine whether the next **$K_{eNB*}$** needs to be based on the current $K_{eNB}$ or a fresh NH.

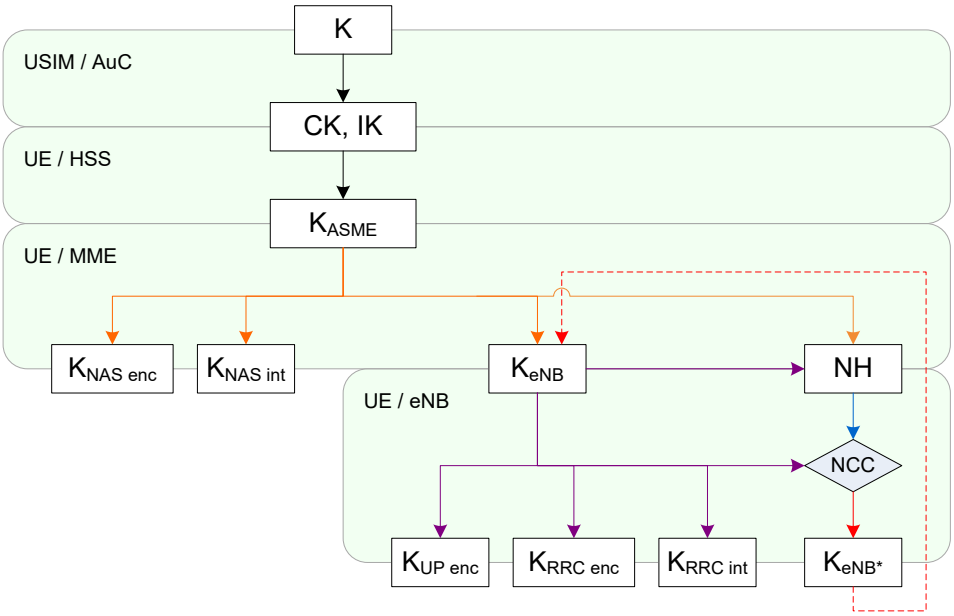


**Figure 14.1-1: Key Derivation**

The MME invokes the AKA procedures by requesting authentication vectors to the HE (Home environment) if no unused EPS authentication vectors have been stored. The HE sends an authentication response back to the MME that contains a fresh authentication vector, including a base-key named $K_{ASME}$. Thus, as a result of an AKA run, the EPC and the UE share $K_{ASME}$. From $K_{ASME}$, the NAS keys, (and indirectly) $K_{eNB}$ keys and NH are derived. The $K_{ASME}$ is never transported to an entity outside of the EPC, but $K_{eNB}$ and NH are transported to the eNB from the EPC when the UE transitions to ECM-CONNECTED. From the $K_{eNB}$, the eNB and UE can derive the UP and RRC keys.

RRC and UP keys are refreshed at handover. $K_{eNB*}$ is derived by UE and source eNB from target PCI, target frequency and $K_{eNB}$ (this is referred to as a *horizontal* key derivation and is indicated to UE with an NCC that does not increase) or



Samsung Exhibit 1015, Page 99 of 198
Samsung Electronics Co., Ltd. v. Asus Technology Licensing Inc.
IPR2024-01217

from target PCI, target frequency and NH (this is referred to as a *vertical* key derivation and is indicated to UE with an NCC increase). $K_{eNB*}$ is then used as new $K_{eNB}$ for RRC and UP traffic at the target. When the UE goes into ECM-IDLE all keys are deleted from the eNB.

COUNT reusing avoidance for the same radio bearer identity in RRC_CONNECTED mode without $K_{eNB}$ change is left to eNB implementation e.g. by using intra-cell handover, smart management of radio bearer identities or triggering a transition to RRC_IDLE.

In case of HFN de-synchronisation in RRC_CONNECTED mode between the UE and eNB, the UE is pushed to IDLE.

## 14.2 Security termination points

The table below describes the security termination points.

**Table 14.2-1 Security Termination Points**

| | Ciphering | Integrity Protection |
|---|---|---|
| NAS Signalling | Required and terminated in MME | Required and terminated in MME |
| U-Plane Data | Required and terminated in eNB | Not Required (NOTE 1) |
| RRC Signalling (AS) | Required and terminated in eNB | Required and terminated in eNB |
| MAC Signalling (AS) | Not required | Not required |
| NOTE 1: Integrity protection for U-Plane is not required and thus it is not supported between UE and Serving Gateway or for the transport of user plane data between eNB and Serving Gateway on S1 interface. | | |

## 14.3 State Transitions and Mobility

### 14.3.1 RRC_IDLE to RRC_CONNECTED

As a general principle, on RRC_IDLE to RRC_CONNECTED transitions, RRC protection keys and UP protection keys shall be generated while keys for NAS protection as well as higher layer keys are assumed to be already available in the MME. These higher layer keys may have been established in the MME as a result of an AKA run, or as a result of a transfer from another MME during handover or idle mode mobility [22].

### 14.3.2 RRC_CONNECTED to RRC_IDLE

On RRC_CONNECTED to RRC_IDLE transitions, eNBs shall delete the keys they store such that state for idle mode UEs only has to be maintained in MME. It is also assumed that eNB does no longer store state information about the corresponding UE and deletes the current keys from its memory. In particular, on connected to idle transitions:

- The eNB and UE deletes NH, $K_{eNB}$ , $K_{RRCenc}$ , $K_{RRCint}$ and $K_{UPenc}$ and related NCC.
- MME and UE keeps $K_{ASME}$, $K_{NASint}$ and $K_{NASenc}$ stored.

### 14.3.3 Intra E-UTRAN Mobility

The key hierarchy does not allow, as is, explicit RRC and UP key updates, but RRC and UP keys are derived based on the algorithm identifiers and $K_{eNB}$ which results with new RRC and UP keys at every handover:

- Source eNB and UE independently create $K_{eNB*}$ with the input parameters as described in 3GPP TS 33.401 [22];
- $K_{eNB*}$ is given to Target eNB during the HO preparation phase;
- Both Target eNB and UE considers the new $K_{eNB}$ equal to the received $K_{eNB*}$.



Samsung Exhibit 1015, Page 100 of 198
Samsung Electronics Co., Ltd. v. Asus Technology Licensing Inc.
IPR2024-01217

The handling of HFN and PDCP SN at handover depends on the type of radio bearer:

- SRB: HFN and PDCP SN are reset.
- RLC-UM bearers: HFN and PDCP SN are reset.
- RLC-AM bearers: PDCP SN and HFN are maintained (10.1.2.3).

NOTE: COUNT reusing avoidance is left to network implementation.

## 14.4 AS Key Change in RRC_CONNECTED

If AS Keys ($K_{UPenc}$ , $K_{RRCint}$ and $K_{RRCenc}$) need to be changed in RRC_CONNECTED, an intra-cell handover shall be used.

## 14.5 Security Interworking

Inter-RAT handover from UTRAN to E-UTRAN is only supported after activation of integrity protection in UTRAN. Security may be activated in the target RAN using null ciphering algorithms. If ciphering was not running in UTRAN, it will be activated at handover to E-UTRAN. Integrity protection shall be activated in E-UTRAN on handover from UTRAN/GERAN.

For E-UTRAN to UTRAN/GERAN mobility, the MME shall derive and transfer to the SGSN a confidentially key and an integrity key derived from $K_{ASME}$ and other input parameters as specified in 3GPP TS 33.401 [22]. Based on this information, the SGSN can in turn derive appropriate keys to be used in the target RAN.

Similarly for UTRAN/GERAN to E-UTRAN mobility, the SGSN shall derive and transfer to the MME a confidentially key and an integrity key CK and IK. Based on this information and other input parameters as specified in 3GPP TS 33.401 [22], the MME and UE can in turn derive $K_{ASME}$.

# 15 MBMS

For MBMS, the following definitions are introduced:

**MBSFN Synchronization Area**: an area of the network where all eNodeBs can be synchronized and perform MBSFN transmissions. MBSFN Synchronization Areas are capable of supporting one or more MBSFN Areas. On a given frequency layer, a eNodeB can only belong to one MBSFN Synchronization Area. MBSFN Synchronization Areas are independent from the definition of MBMS Service Areas

**MBSFN Transmission or a transmission in MBSFN mode**: a simulcast transmission technique realised by transmission of identical waveforms at the same time from multiple cells. An MBSFN Transmission from multiple cells within the MBSFN Area is seen as a single transmission by a UE.

**MBSFN Area**: an MBSFN Area consists of a group of cells within an MBSFN Synchronization Area of a network, which are co-ordinated to achieve an MBSFN Transmission. Except for the MBSFN Area Reserved Cells, all cells within an MBSFN Area contribute to the MBSFN Transmission and advertise its availability. The UE may only need to consider a subset of the MBSFN areas that are configured, i.e. when it knows which MBSFN area applies for the service(s) it is interested to receive.



Samsung Exhibit 1015, Page 101 of 198
Samsung Electronics Co., Ltd. v. Asus Technology Licensing Inc.
IPR2024-01217

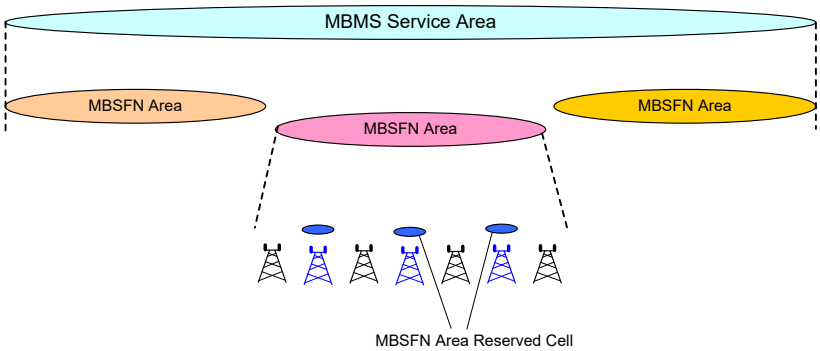


**Figure 15-1: MBMS Definitions**

**MBSFN Area Reserved Cell**: A cell within a MBSFN Area which does not contribute to the MBSFN Transmission. The cell may be allowed to transmit for other services but at restricted power on the resource allocated for the MBSFN transmission.

**Synchronisation Sequence**: Each SYNC PDU contains a time stamp which indicates the start time of the synchronisation sequence. For an MBMS service, each synchronisation sequence has the same duration which is configured in the BM-SC and the MCE.

**Synchronisation Period**: The synchronisation period provides the time reference for the indication of the start time of each synchronisation sequence. The time stamp which is provided in each SYNC PDU is a relative value which refers to the start time of the synchronisation period. The duration of the synchronisation period is configurable.

# 15.1 General

In E-UTRAN, MBMS can be provided with single frequency network mode of operation (MBSFN) only on a frequency layer shared with non-MBMS services (set of cells supporting both unicast and MBMS transmissions i.e. set of "MBMS/Unicast-mixed cells").

MBMS reception is possible for UEs in RRC_CONNECTED or RRC_IDLE states. Whenever receiving MBMS services, a user shall be notified of an incoming call, and originating calls shall be possible. ROHC is not supported for MBMS.

RNs do not support MBMS.

## 15.1.1 E-MBMS Logical Architecture



Samsung Exhibit 1015, Page 102 of 198
Samsung Electronics Co., Ltd. v. Asus Technology Licensing Inc.
IPR2024-01217

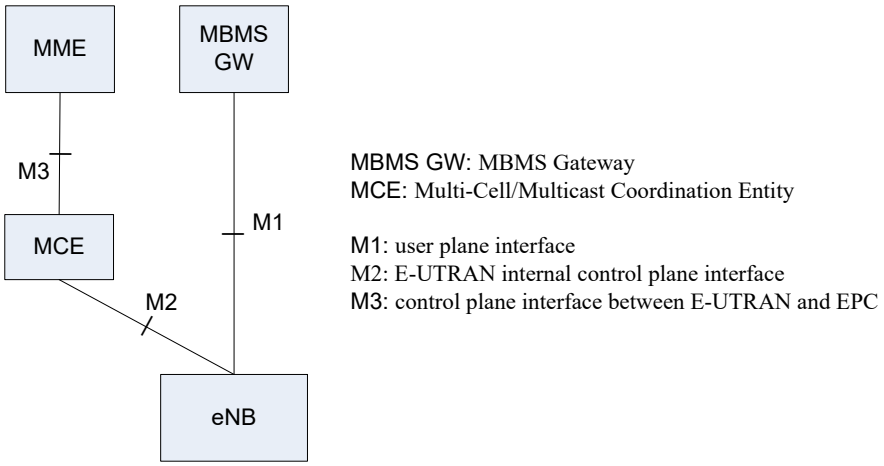


**Figure 15.1.1-1: E-MBMS Logical Architecture**

Figure 15.1.1-1 depicts the E-MBMS Logical Architecture.

**Multi-cell/multicast Coordination Entity (MCE)**

The MCE is a logical entity – this does not preclude the possibility that it may be part of another network element – whose functions are:

- the admission control and the allocation of the radio resources used by all eNBs in the MBSFN area for multi-cell MBMS transmissions using MBSFN operation. The MCE decides not to establish the radio bearer(s) of the new MBMS service(s) if the radio resources are not sufficient for the corresponding MBMS service(s) or may pre-empt radio resources from other radio bearer(s) of ongoing MBMS service(s) according to ARP. Besides allocation of the time/ frequency radio resources this also includes deciding the further details of the radio configuration e.g. the modulation and coding scheme.
- counting and acquisition of counting results for MBMS service(s).
- activation of MBMS session(s) within MBSFN area(s) based on the counting results for the corresponding MBMS service(s).
- deactivation of MBMS session(s) within MBSFN area(s) based on the counting results for the corresponding MBMS service(s) is FFS.

The MCE is involved in MBMS Session Control Signalling. The MCE does not perform UE - MCE signalling.

When the MCE is part of another network element, an eNB is served by a single MCE.

**E-MBMS Gateway (MBMS GW)**

The MBMS GW is a logical entity – this does not preclude the possibility that it may be part of another network element – that is present between the BMSC and eNBs whose principal functions is the sending/broadcasting of MBMS packets to each eNB transmitting the service. The MBMS GW uses IP Multicast as the means of forwarding MBMS user data to the eNB. The MBMS GW performs MBMS Session Control Signalling (Session start/stop) towards the E-UTRAN via MME.

**Control Plane Interfaces**

***"M3" Interface: MCE – MME***

An Application Part is defined for this interface between MME and MCE. This application part allows for MBMS Session Control Signalling on E-RAB level (i.e. does not convey radio configuration data). The procedures comprise e.g. MBMS Session Start and Stop. SCTP is used as signalling transport i.e. Point-to-Point signalling is applied.

***"M2" Interface: MCE – eNB***



Samsung Exhibit 1015, Page 103 of 198
Samsung Electronics Co., Ltd. v. Asus Technology Licensing Inc.
IPR2024-01217

An Application Part is defined for this interface, which conveys at least radio configuration data for the multi-cell transmission mode eNBs and Session Control Signalling. SCTP is used as signalling transport i.e. Point-to-Point signalling is applied.

**User Plane Interface**

***"M1" Interface: MBMS GW – eNB***

This interface is a pure user plane interface. Consequently no Control Plane Application Part is defined for this interface. IP Multicast is used for point-to-multipoint delivery of user packets.

**Deployment consideration**

It is not precluded that M3 interface can be terminated in eNBs. In this case MCE is considered as being part of eNB. However, M2 should keep existing between the MCE and the corresponding eNBs. This is depicted in Figure 15.1.1-2 which depicts two envisaged deployment alternatives. In the scenario depicted on the left MCE is deployed in a separate node. In the scenario on the right MCE is part of the eNBs.

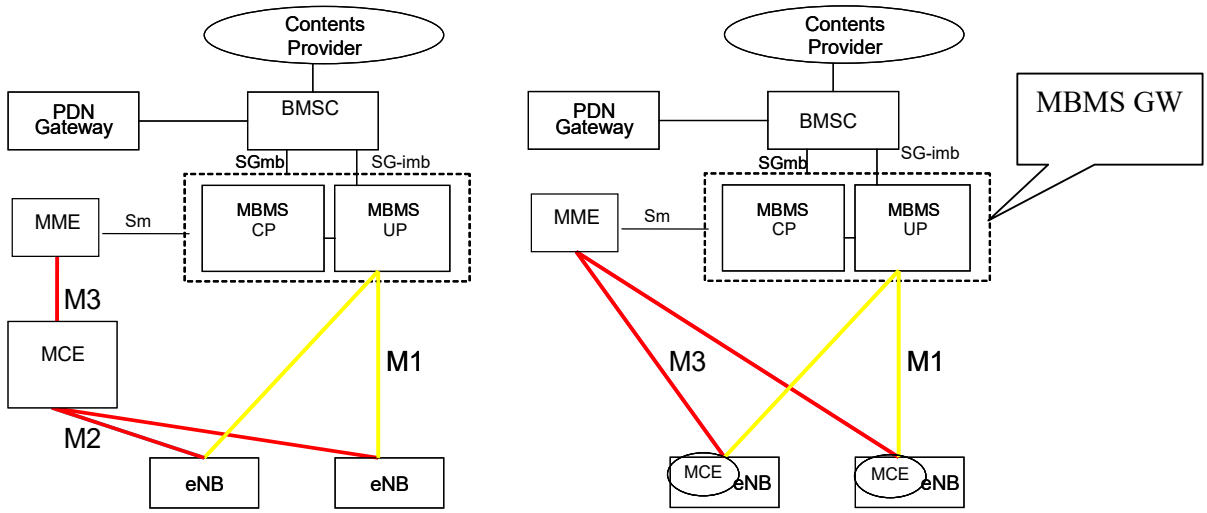


**Figure 15.1.1-2: eMBMS Architecture deployment alternatives**

## 15.1.2 E-MBMS User Plane Protocol Architecture

The overall U-plane architecture of content synchronization is shown in Figure 15.1.2-1. This architecture is based on the functional allocation for Unicast and the SYNC protocol layer is defined additionally on transport network layer to support content synchronization mechanism.



Samsung Exhibit 1015, Page 104 of 198
Samsung Electronics Co., Ltd. v. Asus Technology Licensing Inc.
IPR2024-01217

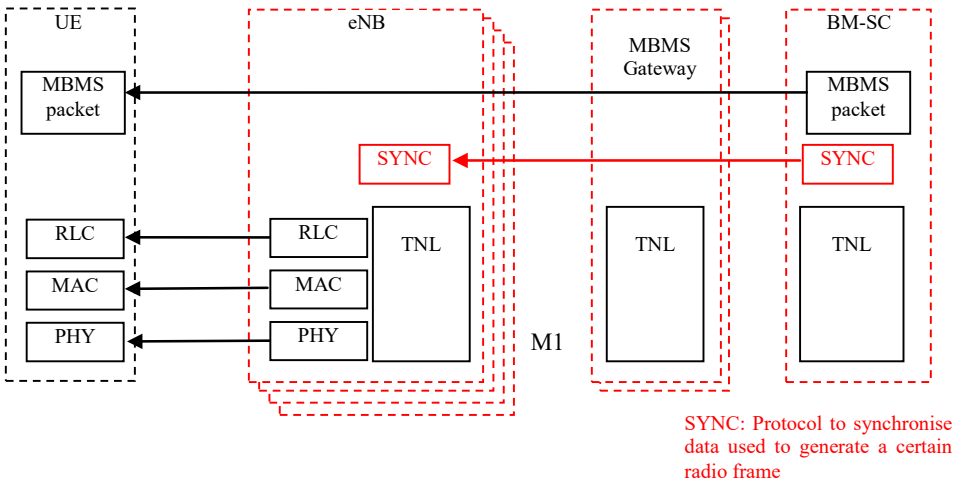


**Figure 15.1.2-1: The overall u-plane architecture of the MBMS content synchronization**

The SYNC protocol is defined as a protocol to carry additional information that enable eNBs to identify the timing for radio frame transmission and detect packet loss. Every E-MBMS service uses its own SYNC entity. The SYNC protocol is applicable to DL and is terminated in the BM-SC.

### 15.1.3 E-MBMS Control Plane Protocol Architecture

The E-MBMS C-plane protocol architecture is shown in Figure 15.1.3-1.

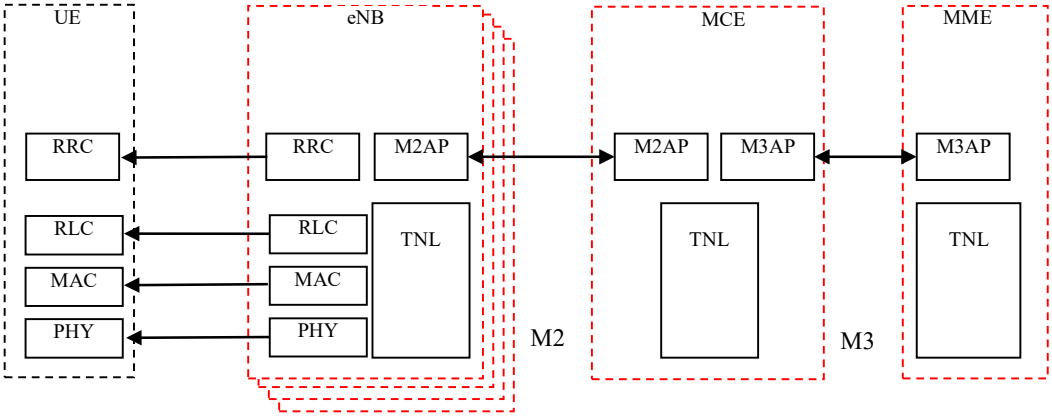


**Figure 15.1.3-1: The E-MBMS c-plane architecture**

MCCH is terminated in the eNB on the network side. How to achieve the synchronisation of MCCH signalling is described in subclause 15.3.8.

## 15.2 MBMS Cells

### 15.2.1 MBMS-dedicated cell

Void



Samsung Exhibit 1015, Page 105 of 198
Samsung Electronics Co., Ltd. v. Asus Technology Licensing Inc.
IPR2024-01217

### 15.2.2 MBMS/Unicast-mixed cell

In E-UTRAN, MBMS is only supported in a carrier shared with unicast traffic. Cells performing MBMS transmissions are referred to as MBMS/Unicast-mixed cells. MBMS is not supported for HeNB.

For MBMS/Unicast mixed cells:

- MTCH and MCCH are mapped on MCH for p-t-m transmission;
- Transmission of both unicast and MBMS in the cell is done in a co-ordinated manner.

## 15.3 MBMS Transmission

### 15.3.1 General

Void.

### 15.3.2 Single-cell transmission

Void.

### 15.3.3 Multi-cell transmission

Multi-cell transmission of MBMS is characterized by:

- Synchronous transmission of MBMS within its MBSFN Area;
- Combining of MBMS transmission from multiple cells is supported;
- Scheduling of each MCH is done by the MCE;
- A single transmission is used for MCH (i.e. neither blind HARQ repetitions nor RLC quick repeat);
- A single Transport Block is used per TTI for MCH transmission, that TB uses all the MBSFN resources in that subframe;
- MTCH and MCCH can be multiplexed on the same MCH and are mapped on MCH for p-t-m transmission;
- MTCH and MCCH use the RLC-UM mode;
- The MAC subheader indicates the LCID for MTCH and MCCH;
- The MBSFN Synchronization Area, the MBSFN Area, and the MBSFN cells are semi-statically configured e.g. by O&M;
- MBSFN areas are static, unless changed by O&M (i.e. no dynamic change of areas);

NOTE: The UE is not required to receive services from more than one MBSFN Area simultaneously and may support only a limited number of MTCHs.

Multiple MBMS services can be mapped to the same MCH and one MCH contains data belonging to only one MBSFN Area. An MBSFN Area contains one or more MCHs. An MCH specific MCS is used for all subframes of the MCH that do not use the MCS indicated in BCCH. All MCHs have the same coverage area.

For MCCH and MTCH, the UE shall not perform RLC re-establishment at cell change between cells of the same MBSFN area. Within the MBSFN subframes, all MCHs within the same MBSFN area occupy a pattern of subframes, not necessarily adjacent in time, that is common for all these MCHs and is therefore called the Common Subframe Allocation (CSA) Pattern. The CSA pattern is periodically repeated within the CSA period. The actual MCH subframe allocation (MSA) for every MCH carrying MTCH is defined by the CSA pattern, the CSA period, and the MSA end, that are all signalled on MCCH. The MSA end indicates the last subframe of the MCH within the CSA period. Consequently, the MCHs are time multiplexed within the CSA period, which finally defines the interleaving degree between the MCHs. It shall be possible for a Rel-9 MCH to not use all MBSFN resources signalled as part of the Rel-8



Samsung Exhibit 1015, Page 106 of 198
Samsung Electronics Co., Ltd. v. Asus Technology Licensing Inc.
IPR2024-01217

MBSFN signalling. Further, such MBSFN resource can be shared for more than one purpose (MBMS, Positioning, etc.). During one MCH scheduling period (MSP), which is configurable per MCH, the eNB applies MAC multiplexing of different MTCHs and optionally MCCH to be transmitted on this MCH.

MCH scheduling information (MSI) is provided per MCH to indicate which subframes are used by each MTCH during the MSP. The following principles are used for the MSI:

- it is used both when services are multiplexed onto the MCH and when only a single service is transmitted on the MCH;
- it is generated by the eNB and provided once at the beginning of the MSP;
- it has higher scheduling priority than the MCCH and, when needed, it appears first in the PDU;
- it allows the receiver to determine what subframes are used by every MTCH, sessions are scheduled in the order in which they are included in the MCCH session list;
- it is carried in a MAC control element which cannot be segmented;
- it carries the mapping of MTCHs to the subframes of the associated MSP. This mapping is based on the indexing of subframes belonging to one MSP.

The content synchronization for multi-cell transmission is provided by the following principles:

1. All eNBs in a given MBSFN Synchronization Area have a synchronized radio frame timing such that the radio frames are transmitted at the same time and have the same SFN.
2. All eNBs have the same configuration of RLC/MAC/PHY for each MBMS service, and identical information (e.g. time information, transmission order/priority information) such that synchronized MCH scheduling in the eNBs is ensured. These are indicated in advance by the MCE.
3. An E-MBMS GW sends/broadcasts MBMS packet with the SYNC protocol to each eNB transmitting the service.
4. The SYNC protocol provides additional information so that the eNBs identify the transmission radio frame(s). The E-MBMS GW does not need accurate knowledge of radio resource allocation in terms of exact time division (e.g. exact start time of the radio frame transmission).
5. eNB buffers MBMS packet and waits for the transmission timing indicated in the SYNC protocol.
6. The segmentation/concatenation is needed for MBMS packets and should be totally up to the RLC/MAC layer in eNB.
7. The SYNC protocol provides means to detect packet loss(es) and supports a recovery mechanism robust against loss of consecutive PDU packets (MBMS Packets with SYNC Header).
8. For the packet loss case the transmission of radio blocks potentially impacted by the lost packet should be muted.
9. The mechanism supports indication or detection of MBMS data burst termination (e.g. to identify and alternately use available spare resources related to pauses in the MBMS PDU data flow).
10. If two or more consecutive SYNC SDUs within a SYNC bearer are not received by the eNB, or if no SYNC PDUs of Type 0 or 3 are received for some synchronization sequence, the eNB may mute the exact subframes impacted by lost SYNC PDUs using information provided by SYNC protocol. If not muting only those exact subframes, the eNB stops transmitting the associated MCH from the subframe corresponding to the consecutive losses until the end of the corresponding MSP and it does not transmit in the subframe corresponding to the MSI of that MSP.
11. The eNB sets VT(US) to zero in the RLC UM entity corresponding to an MCCHat its modification period boundary.
12. The eNB sets VT(US) to zero in each RLC UM entity corresponding to an MTCH at the beginning of its MSP.
13. The eNB sets every bit in the MAC padding on MCH to "0".



Samsung Exhibit 1015, Page 107 of 198
Samsung Electronics Co., Ltd. v. Asus Technology Licensing Inc.
IPR2024-01217

### 15.3.4 MBMS Reception States

UEs that are receiving MTCH transmissions can be in RRC_IDLE or RRC_CONNECTED state.

### 15.3.5 MCCH Structure

The following principles govern the MCCH structure:

- One MBSFN Area is associated with one MCCH and one MCCH corresponds to one MBSFN Area;
- The MCCH is sent on MCH;
- MCCH consists of a single RRC message which lists all the MBMS services with ongoing sessions;
- MCCH is transmitted by all cells within an MBSFN Area, except the MBSFN Area Reserved Cells;
- MCCH is transmitted by RRC every MCCH repetition period;
- MCCH uses a modification period;
- A notification mechanism is used to announce changes of MCCH due to Session Start;
  - The notification is sent periodically throughout the modification period preceding the change of MCCH, in MBSFN subframes configured for notification;
  - The DCI format 1C with M-RNTI is used for notification and includes an 8-bit bitmap to indicate the one or more MBSFN Area(s) in which the MCCH change(s);
  - The UE monitors more than one notification subframe per modification period;
  - When the UE receives a notification, it acquires the MCCH at the next modification period boundary;
- The UE is informed of changes other than Session Start by MCCH monitoring at the modification period.

### 15.3.6 MBMS signalling on BCCH

- BCCH only points to the resources where the MCCH(s) can be found i.e. it does not indicate the availability of the services;
- For each MCCH, BCCH indicates independently:
  - the scheduling of the MCCH for multi-cell transmission on MCH;
  - the MCCH modification period, repetition period radio frame offset and subframe allocation;
  - an MCS which applies to the subframes indicated for MCCH scheduling and for the first subframe of all MSPs in that MBSFN Area.
- For the notification commonly used for all MCCH, BCCH:
  - configures the position of the MCCH change notification subframe and the number of occasions monitored by the UE.
  - indicates the mapping between the PDCCH bit(s) carried in the notification and the MCCH(s).

### 15.3.7 MBMS User Data flow synchronisation

The synchronised radio interface transmission from the cells controlled by different eNBs require a SYNC-protocol support over the M1-interface between the BM-SC and the eNBs.

As part of the SYNC-protocol procedures the BM-SC shall include within the SYNC PDU packets a time stamp which tells the timing based on which the eNB sends MBMS data over the air interface. This time stamp is based on a common time reference, and common start of the first synchronisation period available at the BM-SC and the concerned eNBs and represents a relative time value which refers to the start time of the synchronisation period.



Samsung Exhibit 1015, Page 108 of 198
Samsung Electronics Co., Ltd. v. Asus Technology Licensing Inc.
IPR2024-01217

The BM-SC shall set the timestamp of all SYNC packets in one synchronisation sequence of an MBMS service to the same value. The BM-SC should take into account the following factors for setting the timestamp: arrival time of data, the Maximum Transmission Delay from the BM-SC to the farthermost eNB, the length of the synchronisation sequence used for time stamping and other extra delay (e.g. processing delay in the eNB). The MSP length is one or multiple times of the synchronisation sequence length for MBMS services in the MCH.

MBMS user data shall be time-stamped based on separable synchronisation sequences which are tied to multiples of the TTI length. Each synchronisation sequence for each service is denoted by a single timestamp value working in such a manner that an increase of the timestamp value by one or more synchronisation sequence lengths shall be interpreted as an implicit start-of-a-new-synchronisation-sequence-indicator, so that the eNB becomes aware that a new sequence is starting.

The BM-SC does not know the absolute time point at which a TTI starts, but the sequence length for the time stamp is set by O&M like the delay parameters. The BM-SC will use the delay parameters to define the transmission time point of that user data packet and for the following user data packets the sequence length for the time stamp: following user data packets arriving within e.g. 40ms will receive the same time stamp value as the first data packet, if the sequence length is set to be 40 ms.

The eNB shall schedule the received data packets in the first MSP following the time point indicated by the timestamp.

The elementary procedures related to the SYNC-protocol are defined in [36].

Based on the parameters in the SYNC Header (e.g. Timestamp, Packet Number, Elapsed Octet Counter), the eNB is able to derive the timing for downlink radio transmission and notice if any SYNC packets are lost during transmission from BM-SC to the eNB. The eNB is also able to know the size of the lost SYNC packet in case a single SYNC packet is lost. Furthermore, the eNB may also be able to know the sizes of each lost SYNC packet if multiple consecutive SYNC packets are lost. Additionally the eNB is able to reorder the PDUs before passing them to RLC processing, if needed.

At the end of each synchronisation sequence the BM-SC shall send to the eNBs a user data frame, which contains counter information including '*Total Number Of Packet Counter*' and '*Total Number Of Octet*' without MBMS payload. This *Total Counter* frame is implicitly marking the end-of-sync.seq.. The *Total Counter* frame without payload may be repeated in order to improve the reliability of the delivery to the eNBs.

In case the SYNC protocol delivers more data for an MCH than the air interface can transport in the scheduling period, the following procedure shall be used by the eNB. As long as the eNB must drop a packet because it has too much data for this MCH scheduling period, it does the following,

- select the last bearer according to the order in the MCCH list with a SYNC SDU available for dropping;
- for the selected bearer, drop the available SYNC SDU with the highest Packet Number among the SYNC SDUs with the latest Timestamp.

A SYNC SDU is considered available for dropping when the eNB knows its size and it has not been dropped by the eNB.

### 15.3.8 Synchronisation of MCCH Update Signalling via M2

The synchronised radio interface transmission from the cells controlled by different eNBs require means to ensure that the MCCH content is updated at the same modification period border in each cell belonging to the same MBSFN Area.

The MCE and the concerned eNBs maintain a common time reference which allows each node to be aware of the modification period boundary within an MBSFN Area. In addition, each node maintains a counter of modification periods which is incremented by one at each modification period boundary. This counter which is based on common start of the first MCCH modification period, allows the MCE to indicate to the eNBs at which modification period the MCCH update shall take place. The MCE shall ensure that it starts to inform all eNBs within the MBSFN Area well in advance. In case of the simultaneously change of the MCCH information and the MCCH related BCCH information, the eNB may use this counter to decide after which BCCH modification period the MCCH related BCCH information update takes place.



Samsung Exhibit 1015, Page 109 of 198
Samsung Electronics Co., Ltd. v. Asus Technology Licensing Inc.
IPR2024-01217

### 15.3.9 IP Multicast Distribution

To improve the transport efficiency the IP Multicast shall be used for the MBMS payload distribution in the backbone network between the MBMS-GW and the eNBs that have joined the IP Multicast Group.

The MBMS-GW allocates the Transport Layer Address used for the IP multicast and the DL TEID used for the M1 Transport association. The MBMS-GW sends this information to the MME(s) during the Session Start and, if needed, during Session Update procedures . The MCE(s) shall receive these parameters from the MME in the MBMS Session Start Request message and pass them to the relevant eNBs. The MCE may also receive these parameters in the MBMS Session Update message as part of the MBMS session attributes, and pass them to the relevant eNBs via the MBMS Session Start procedure or the MBMS Session Update procedure.

If the eNB accepts the MBMS Session Start request, or if it is required following the acceptance of the MBMS Session Update request, the eNB shall join the channel (IP Multicast and Source address) to the backbone in order to join the bearer service multicast distribution.

The MBMS payload is forwarded by the MBMS-GW towards the IP Multicast address. The eNBs having joined that IP Multicast address will receive the user data packets (SYNC PDU) together with the synchronisation-related information in header part of SYNC PDU.

## 15.4 Service Continuity

UEs that are receiving MBMS service(s) in RRC_IDLE state performing cell reselection or are in RRC_CONNECTED state obtain target cell MTCH information from the target cell MCCH. Mechanisms to deliver MCCH to UE via handover command are not supported.

MBMS does not affect unicast mobility procedures and going from one MBSFN area to another is left up to UE implementation. No new information is provided to help the UE in switching reception between MBSFNs, but the frequency layer which carries the MBSFN transmission may be set to a high priority to help service continuity in RRC_IDLE.

No AS level mechanism for service continuity will be defined for mobility outside cells belonging to the MBSFN area, such as HeNB.

## 15.5 Network sharing

Network sharing of MBMS resources among multiple operators of the same country is supported, with focus on, but not limited to, sharing of a dedicated-carrier MBSFN. MBMS network sharing shall not require unicast network sharing. Unicast mobility shall not be affected by the sharing of MBMS resources by operators.

NOTE: it is FFS whether this is based on dual-receiver solutions.

## 15.6 Network Functions for Support of Multiplexing

Considerable gain in radio resource efficiency can be achieved by multiplexing several E-MBMS services on a single MCH. The services that share the resources are called E-MBMS Service Multiplex. The amount of common radio resources allocated to such an E-MBMS Service Multiplex can be smaller than the sum of radio resources, which would need to be allocated for the individual services without multiplexing. This represents the statistical multiplexing gain.

The MCE manages the E-MBMS Service Multiplex e.g. deciding which services are to be multiplexed on which MCH. The duration of each E-MBMS service may be different, so there is a need to manage the Service Multiplex dynamically, i.e. addition or removal of services into/from the E-MBMS Service Multiplex. The MCE allocates the optimal amount of resources to multiplexed services, using service related information. The MCE selects the CSA pattern for the MCHs and also the order in which the services appear in the MCCH. MBSFN transmission is ensured by identical multiplexing of the services within the MBMS-GW or different eNBs. The location of the multiplexing function is in the eNB MAC layer.

These functions are supported by respective signalling information on M2 interface and by the SYNC protocol on M1. This scheduling information is sent to all eNBs via the M2 interface procedure "MBMS Scheduling Information".



Samsung Exhibit 1015, Page 110 of 198
Samsung Electronics Co., Ltd. v. Asus Technology Licensing Inc.
IPR2024-01217

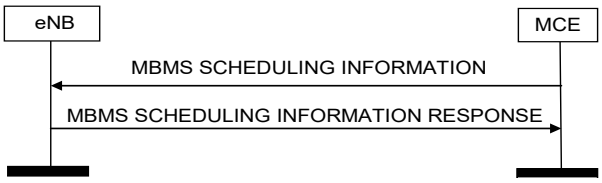


**Figure 15.6.1 MBMS Scheduling Information procedure message flow on M2 interface**

# 15.7 Procedures

## 15.7.1 Procedures for Broadcast mode

### 15.7.1.1 Session Start procedure

The purpose of the MBMS Session Start procedure is to request the E-UTRAN to notify UEs about an upcoming MBMS Session of a given MBMS Bearer Service and to establish an MBMS E-RAB for this MBMS Session. The MBMS Session Start procedure is triggered by the EPC.

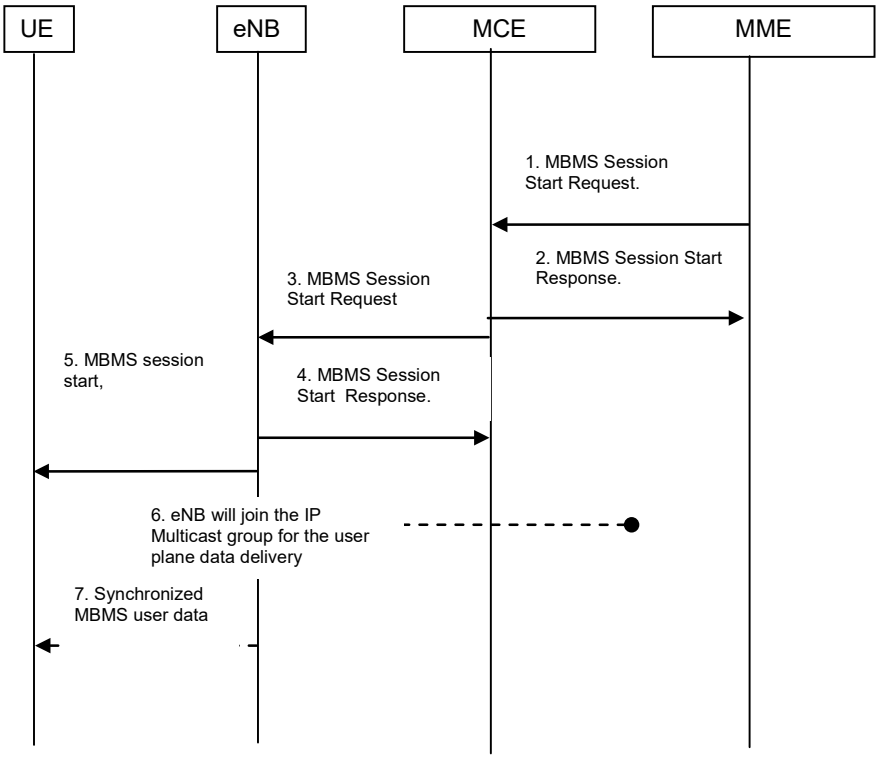


**Figure 15.7.1.1-1. Session Start procedure**

1. The MME sends MBMS session start request message to the MCE(s) controlling eNBs in the targeted MBMS service area. The message includes the IP multicast address, session attributes and the minimum time to wait before the first data delivery.

2. MCE checks whether the radio resources are sufficient for the establishment of new MBMS service(s) in the area it controls. If not, MCE decides not to establish the radio bearers of the MBMS service(s) and does not forward the MBMS session start request message to the involved eNBs, or may pre-empt radio resources from other radio bearer(s) of ongoing MBMS service(s) according to ARP. The MCE confirms the reception of the MBMS Session Start request to the MME. This message can be transmitted before the step 4.



Samsung Exhibit 1015, Page 111 of 198
Samsung Electronics Co., Ltd. v. Asus Technology Licensing Inc.
IPR2024-01217

3. MCE sends the MBMS Session Start message to the eNBs in the targeted MBMS service area.

NOTE: When to send the MBMS Session Start message from MCE to eNB according to the minimum time to wait indication is an MCE implementation issue.

4. eNB confirms the reception of the MBMS Session Start message.
5. eNB indicates MBMS session start to UEs by MCCH change notification and updated MCCH information which carries the MBMS service's configuration information.
6. eNB joins the IP multicast group to receive the MBMS User Plane data.
7. eNB sends the MBMS data to radio interface at the determined time.

### 15.7.1.2 Session Stop procedure

The MBMS Session Stop procedure is to request the E-UTRAN to notify UEs about the end of a given MBMS Session and to release the corresponding MBMS E-RAB this MBMS Session. The MBMS Session Stop procedure is triggered by the EPC.

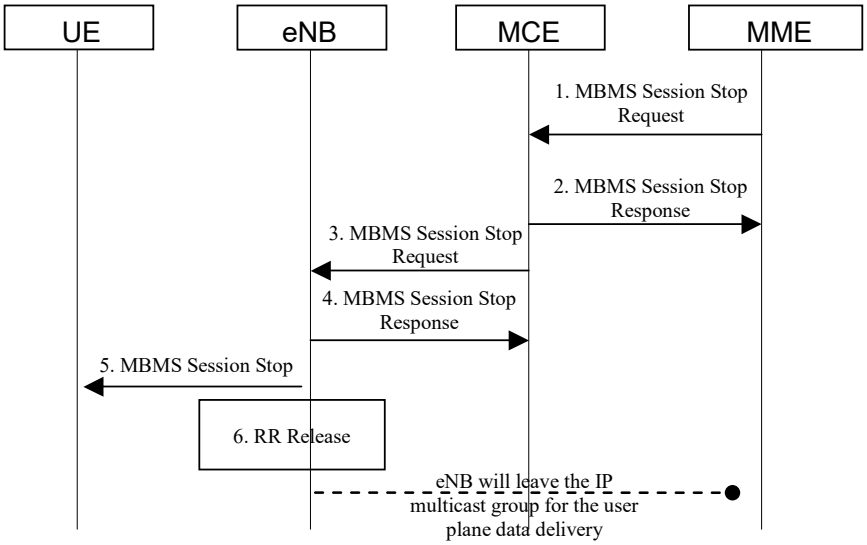


**Figure 15.7.1.2-1. Session Stop procedure**

1. The MME sends MBMS session stop request message to the MCE(s) controlling eNBs in the targeted MBMS service area.
2. MCE confirms the reception of the MBMS Session stop request to the MME.
3. MCE forwards the MBMS Session stop message to the eNBs in the targeted MBMS service area.
4. eNB confirms the reception of the MBMS Session stop message.
5. eNB indicates MBMS session stop to UEs by removing any service configuration associated with the stopped session from the updated MCCH message.
6. The corresponding E-RAB is released, and eNB leaves the IP multicast group.

# 15.7a M1 Interface

## 15.7a.1 M1 User Plane

The M1 user plane interface is defined between the eNB and the MBMS GW. The M1 user plane interface provides non guaranteed delivery of user plane PDUs between the eNB and the MBMS GW. The user plane protocol stack on the M1



Samsung Exhibit 1015, Page 112 of 198
Samsung Electronics Co., Ltd. v. Asus Technology Licensing Inc.
IPR2024-01217

interface is shown in Figure 15.7a.1-1. The transport network layer is built on IP transport and GTP-U is used on top of UDP/IP to carry the user plane PDUs between the eNB and the MBMS GW.

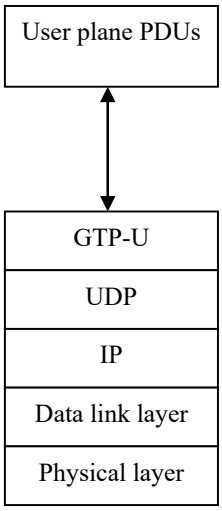


**Figure 15.7a.1-1: M1 Interface User Plane (eNB – MBMS GW)**

# 15.8 M2 Interface

## 15.8.1 M2 Control Plane

The M2 control plane interface is defined between the eNB and the MCE. The control plane protocol stack of the M2 interface is shown on Figure 15.8.1-1. The transport network layer is built on IP transport, for the reliable transport of signalling messages SCTP is added on top of IP. The application layer signalling protocol is referred to as M2AP (M2 Application Protocol).

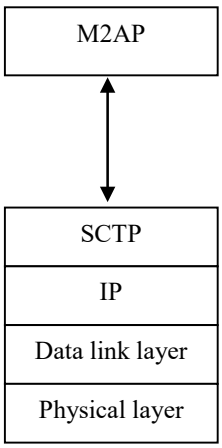


**Figure 15.8.1-1: M2 Interface Control Plane (eNB-MCE)**

The SCTP layer provides the guaranteed delivery of application layer messages.

In the transport IP layer point-to-point transmission is used to deliver the signalling PDUs.

A single SCTP association per eNB-MCE interface instance shall be used with one pair of stream identifiers for M2 common procedures. Only a few pairs of stream identifiers should be used for M2 MBMS-service-dedicated procedures. eNB and MCE communication context identifiers that are assigned by the eNB and the MCE for M2



Samsung Exhibit 1015, Page 113 of 198
Samsung Electronics Co., Ltd. v. Asus Technology Licensing Inc.
IPR2024-01217

MBMS-service-dedicated procedures shall be used to distinguish MBMS service specific M2 signalling transport bearers. The communication context identifiers are conveyed in the respective M2AP messages.

## 15.8.2 M2 Interface Functions

### 15.8.2.1 General

The M2 interface provides the following functions:

- MBMS Session Handling Function:
  - MBMS Session Start, MBMS Session Stop, MBMS Session Update.
- MBMS Scheduling Information Provision Function.
- M2 Interface Management Function:
  - Reset, Error Indication.
- M2 Configuration Function.
- MBMS Service Counting Function.

### 15.8.2.2 MBMS Session Handling Function

The MBMS Session Handling Function enables the MCE to provide Session Start, Session Stop and Session Update messages to the eNBs it is connected to. The MCE provides respective QoS and MBMS Area information to the eNB.

### 15.8.2.3 MBMS Scheduling Information Provision Function

The MBMS Scheduling Information Provision Function enables the MCE to configure MCCH content according to the expected or ongoing MBMS services.

### 15.8.2.4 M2 Interface Management Function

The M2 interface management functions provide:

- means to ensure a defined start of the M2 interface operation (reset);
- means to handle different versions of application part implementations and protocol errors (error indication).

### 15.8.2.5 M2 Configuration Function

The M2 Configuration Function allows the eNB to exchange with the MCE node configuration information necessary for operation the M2 interface, and MCCH related BCCH content.

### 15.8.2.6 MBMS Service Counting Function

The MBMS Service Counting Function enables the MCE to perform counting and to receive counting results per MBMS service(s) within MBSFN area(s). MCE can perform counting only for those MBMS service(s) for which access has not been denied by the admission control function for the corresponding MBMS session(s).

## 15.8.3 M2 Interface Signalling Procedures

### 15.8.3.1 General

M2 interface signalling consists of the following procedures:

- MBMS Session signalling procedures:
  - MBMS Session Start procedure;



Samsung Exhibit 1015, Page 114 of 198
Samsung Electronics Co., Ltd. v. Asus Technology Licensing Inc.
IPR2024-01217

  - MBMS Session Stop procedure;
  - MBMS Session Update procedure.
- MBMS Scheduling Information procedure;
- M2 Interface Management procedures:
  - Reset procedure;
  - Error Indication procedure.
- M2 Configuration procedures:
  - M2 Setup procedure;
  - eNB Configuration Update procedure;
  - MCE Configuration Update procedure.
- MBMS Service Counting procedures:
  - MBMS Service Counting Request procedure;
  - MBMS Service Counting Results Report procedure.

#### 15.8.3.2 MBMS Session signalling procedure

The MBMS Session Handling Function enables the MCE to deliver Session Start, Session Stop and Session Update messages to the concerned eNBs. At Session Start and Session Update, the MCE provides respective QoS and MBMS Area information to the eNB.

#### 15.8.3.3 MBMS Scheduling Information procedure

The MBMS Scheduling Information procedure enables the MCE to update MCCH information whenever necessary. Typically, the MCE issues an MBMS Scheduling Information procedure before user data transmission for an announced MBMS service starts or after it has ended.

#### 15.8.3.4 M2 Interface Management procedures

##### 15.8.3.4.1 Reset procedure

The Reset procedure is issued in order to initialize the peer entity after node setup and after a failure event occurred. This procedure may be initiated by both the eNB and MCE. The receiving entity shall release all resources.

##### 15.8.3.4.2 Error Indication procedure

The Error Indication procedure may be initiated by the eNB and the MCE. It is used to report detected errors in one incoming message, if an appropriate failure message cannot be reported to the sending entity.

#### 15.8.3.5 M2 Configuration procedures

##### 15.8.3.5.1 M2 Setup procedure

The M2 Setup procedure allows the exchange of configured data which is required in the MCE and in the eNB respectively to ensure a proper interoperation and MCCH related BCCH content. The M2 Setup procedure is triggered by the eNB. The M2 Setup procedure is the first M2AP procedure executed on an M2 interface instance.

##### 15.8.3.5.2 eNB Configuration Update procedure

The eNB Configuration Update procedure is used to provide updated configured data in the eNB and receive MCCH related BCCH content from MCE. The eNB Configuration Update procedure is triggered by the eNB.



Samsung Exhibit 1015, Page 115 of 198
Samsung Electronics Co., Ltd. v. Asus Technology Licensing Inc.
IPR2024-01217

#### 15.8.3.5.3 MCE Configuration Update procedure

The MCE Configuration Update procedure is used to provide updated configured data in the MCE and tell eNB updated MCCH related BCCH content. The MCE Configuration Update procedure is triggered by the MCE.

### 15.8.3.6 MBMS Service Counting procedures

#### 15.8.3.6.1 MBMS Service Counting Request procedure

The MBMS Service Counting Request procedure is used to trigger the eNB to count the number of UEs that either are receiving the MBMS service(s) or are interested in the reception of the MBMS service(s).

#### 15.8.3.6.2 MBMS Service Counting Results Report procedure

The MBMS Service Counting Results Report procedure is used to provide the MCE with the number of UEs that either are receiving the MBMS service(s) or are interested in the reception of the MBMS service(s) based on counting performed by the eNB.

NOTE: It is FFS if the MCE should be able to differentiate if the counting results correspond to the UEs that are receiving the MBMS service(s) or to the UEs interested in reception of the MBMS service(s).

## 15.9 M3 Interface

### 15.9.1 M3 Control Plane

The M3 control plane interface is defined between the MME and the MCE. The control plane protocol stack of the M3 interface is shown on Figure 15.9.1-1. The transport network layer is built on IP transport, for the reliable transport of signalling messages SCTP is added on top of IP. The application layer signalling protocol is referred to as M3AP (M3 Application Protocol).

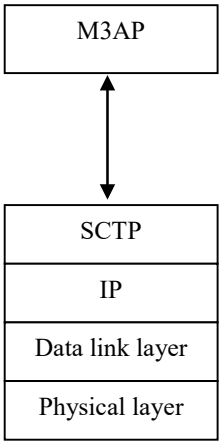


**Figure 15.9.1-1: M3 Interface Control Plane (MME-MCE)**

The SCTP layer provides the guaranteed delivery of application layer messages.

In the transport IP layer point-to-point transmission is used to deliver the signalling PDUs.

A single SCTP association per MME-MCE interface instance shall be used with one pair of stream identifiers for M3 common procedures. Only a few pairs of stream identifiers should be used for M3 MBMS-service-dedicated procedures. MME and MCE communication context identifiers that are assigned by the MME and the MCE for M3 MBMS-service-dedicated procedures shall be used to distinguish MBMS service specific M3 signalling transport bearers. The communication context identifiers are conveyed in the respective M3AP messages.



Samsung Exhibit 1015, Page 116 of 198
Samsung Electronics Co., Ltd. v. Asus Technology Licensing Inc.
IPR2024-01217

## 15.9.2 M3 Interface Functions

### 15.9.2.1 General

The M3 interface provides the following functions:

- MBMS Session Handling Function:
  - MBMS Session Start, MBMS Session Stop, MBMS Session Update.
- M3 Interface Management Function:
  - Reset, Error Indication.

### 15.9.2.2 MBMS Session Handling Function

The MBMS Session Handling Function enables the MME to provided Session Start, Session Stop and Session Update messages to the MCEs it is connected to. The MME provides respective QoS and MBMS Area information to the MCEs.

### 15.9.2.3 M3 Interface Management Function

The M3 interface management functions provide:

- means to ensure a defined start of the M3 interface operation (reset);
- means to handle different versions of application part implementations and protocol errors (error indication).

## 15.9.3 M3 Interface Signalling Procedures

### 15.9.3.1 General

M3 interface signalling consists of the following procedures:

- MBMS Session signalling procedures:
  - MBMS Session Start procedure;
  - MBMS Session Stop procedure;
  - MBMS Session Update procedure.
- M3 Interface Management procedures:
  - Reset procedure;
  - Error Indication procedure.

### 15.9.3.2 MBMS Session signalling procedure

The MBMS Session Handling Function enables the MME to deliver Session Start, Session Stop and Session Update messages to the concerned MCEs. At Session Start and Session Update, the MME provides respective QoS and MBMS Area information to the MCEs.

### 15.9.3.3 M3 Interface Management procedures

#### 15.9.3.3.1 Reset procedure

The Reset procedure is issued in order to initialize the peer entity after node setup and after a failure event occurred. This procedure may be initiated by both the MME and MCE. The receiving entity shall release all resources.



Samsung Exhibit 1015, Page 117 of 198
Samsung Electronics Co., Ltd. v. Asus Technology Licensing Inc.
IPR2024-01217

#### 15.9.3.3.2 Error Indication procedure

The Error Indication procedure may be initiated by the MME and the MCE. It is used to report detected errors in one incoming message, if an appropriate failure message cannot be reported to the sending entity.

## 15.10 MBMS Counting

### 15.10.1 General

MBMS counting in LTE is used to determine if there are sufficient UEs interested in receiving a service to enable the operator to decide if it is appropriate to deliver the service via MBSFN. It allows the operator to choose between enabling or disabling MBSFN transmission for the service. MBMS counting applies only to connected mode UEs. Enabling MBSFN transmission is called as "Activation" and disabling is called "Deactivation".

The following principles are used for the MBMS counting:

- Activation/Deactivation of MBMS service provision is applied in a whole MBSFN area rather than individual cell level, and only on existing MBSFN areas.
- Counting is supported for both a service already provided by MBSFN in an MBSFN area as well as for a service not yet provided via MBSFN in an MBSFN area. A service not yet provided via MBSFN in an MBSFN area may be:
  - Service provided via unicast bearer.
  - Service not yet provided either by MBSFN or by unicast.
- RAN is not aware of MBMS service provisioning through unicast bearers.

### 15.10.2 Counting Procedure

The Counting Procedure is initiated by the network. Initiation of the Counting Procedure results in a request to each eNB involved in the providing MBSFN area to send a Counting Request (the Counting Request is included in the directly extended MCCH message), which contains a list of TMGI's requiring UE feedback. The connected mode UEs which are receiving or interested in the indicated services will respond with a RRC Counting Response message, which includes short MBMS service identities (unique within the MBSFN service area) and may optionally include the information to identify the MBSFN Area (if overlapping is configured).

The following principles are used for the Counting Procedure:

- Network has means to disable UE counting per service.
- The UE is able to report on multiple MBMS services via a single Counting Response message.
- It is unnecessary to retransmit the Counting Response when the UE moves within the same MBSFN area.
- The network only gets one response from a UE related to one Counting Request message, which is broadcast for one modification period.
- The UE can not automatically indicate to network a change of interest in MBMS service(s).
- The network counts UE interest per service.

# 16 Radio Resource Management aspects

The purpose of radio resource management (RRM) is to ensure the efficient use the available radio resources and to provide mechanisms that enable E-UTRAN to meet radio resource related requirements identified in sub-clause 10 of 3GPP TR 25.913 [2]. In particular, RRM in E-UTRAN provides means to manage (e.g. assign, re-assign and release) radio resources taking into account single and multi-cell aspects.



Samsung Exhibit 1015, Page 118 of 198
Samsung Electronics Co., Ltd. v. Asus Technology Licensing Inc.
IPR2024-01217

# 16.1 RRM functions

## 16.1.1 Radio Bearer Control (RBC)

The establishment, maintenance and release of Radio Bearers involve the configuration of radio resources associated with them. When setting up a radio bearer for a service, radio bearer control (RBC) takes into account the overall resource situation in E-UTRAN, the QoS requirements of in-progress sessions and the QoS requirement for the new service. RBC is also concerned with the maintenance of radio bearers of in-progress sessions at the change of the radio resource situation due to mobility or other reasons. RBC is involved in the release of radio resources associated with radio bearers at session termination, handover or at other occasions.

RBC is located in the eNB.

## 16.1.2 Radio Admission Control (RAC)

The task of radio admission control (RAC) is to admit or reject the establishment requests for new radio bearers. In order to do this, RAC takes into account the overall resource situation in E-UTRAN, the QoS requirements, the priority levels and the provided QoS of in-progress sessions and the QoS requirement of the new radio bearer request. The goal of RAC is to ensure high radio resource utilization (by accepting radio bearer requests as long as radio resources available) and at the same time to ensure proper QoS for in-progress sessions (by rejecting radio bearer requests when they cannot be accommodated).

RAC is located in the eNB.

## 16.1.3 Connection Mobility Control (CMC)

Connection mobility control (CMC) is concerned with the management of radio resources in connection with idle or connected mode mobility. In idle mode, the cell reselection algorithms are controlled by setting of parameters (thresholds and hysteresis values) that define the best cell and/or determine when the UE should select a new cell. Also, E-UTRAN broadcasts parameters that configure the UE measurement and reporting procedures. In connected mode, the mobility of radio connections has to be supported. Handover decisions may be based on UE and eNB measurements. In addition, handover decisions may take other inputs, such as neighbour cell load, traffic distribution, transport and hardware resources and Operator defined policies into account.

CMC is located in the eNB.

## 16.1.4 Dynamic Resource Allocation (DRA) - Packet Scheduling (PS)

The task of dynamic resource allocation (DRA) or packet scheduling (PS) is to allocate and de-allocate resources (including buffer and processing resources and resource blocks (i.e. chunks)) to user and control plane packets. DRA involves several sub-tasks, including the selection of radio bearers whose packets are to be scheduled and managing the necessary resources (e.g. the power levels or the specific resource blocks used). PS typically takes into account the QoS requirements associated with the radio bearers, the channel quality information for UEs, buffer status, interference situation, etc. DRA may also take into account restrictions or preferences on some of the available resource blocks or resource block sets due to inter-cell interference coordination considerations.

DRA is located in the eNB.

## 16.1.5 Inter-cell Interference Coordination (ICIC)

Inter-cell interference coordination has the task to manage radio resources such that inter-cell interference is kept under control. ICIC mechanism includes a frequency domain component and time domain component. ICIC is inherently a multi-cell RRM function that needs to take into account information (e.g. the resource usage status and traffic load situation) from multiple cells. The preferred ICIC method may be different in the uplink and downlink.

The frequency domain ICIC manages radio resource, notably the radio resource blocks.

For the time domain ICIC, Almost Blank Subframes (ABSs) are used to protect resources receiving strong inter-cell interference. MBSFN subframes can be used for time domain ICIC when they are also included in ABS patterns. The



Samsung Exhibit 1015, Page 119 of 198
Samsung Electronics Co., Ltd. v. Asus Technology Licensing Inc.
IPR2024-01217

eNB cannot configure MBSFN subframes [4] as ABSs when these MBSFN subframes are used for other usages (e.g., MBMS, LCS).

ICIC is located in the eNB.

#### 16.1.5.1 UE configurations for time domain ICIC

For the UE to measure "protected" resources of the serving cell and/or neighbour cells, RRM/RLM/CSI measurement resource restriction is signalled to the UE. There are three kinds of measurement resource restriction patterns that may be configured for the UE.

- Pattern 1: A single RRM/RLM measurement resource restriction for the serving cell.
- Pattern 2: At least one RRM measurement resource restriction for neighbour cells. FFS whether this can only apply for certain neighbour cells or for inter-frequency cells.
- Pattern 3: Resource restriction for CSI measurement of the serving cell.

In RRC_CONNECTED, the RRM/RLM/CSI measurement resource restrictions are configured by dedicated RRC signalling. The exact details concerning the simultaneous use of the restriction patterns are FFS.

#### 16.1.5.2 OAM requirements for time domain ICIC

##### 16.1.5.2.1 Configuration for CSG cell

When the time-domain inter-cell interference coordination is used for non-members UE in close proximity of a CSG cell, OAM configures a CSG cell not to use a time domain resource set (i.e. a set of subframes), so that a non-member UE in close proximity of the CSG cell can be still served by another cell. OAM also configures a cell neighbour to a CSG cell with the protected time domain resource set not used by the CSG cell, so that the neighbor cell knows which time domain resource can be used for a non-member UE in close proximity of the CSG cell.

### 16.1.6 Load Balancing (LB)

Load balancing has the task to handle uneven distribution of the traffic load over multiple cells. The purpose of LB is thus to influence the load distribution in such a manner that radio resources remain highly utilized and the QoS of in-progress sessions are maintained to the extent possible and call dropping probabilities are kept sufficiently small. LB algorithms may result in hand-over or cell reselection decisions with the purpose of redistribute traffic from highly loaded cells to underutilized cells.

LB is located in the eNB.

### 16.1.7 Inter-RAT Radio Resource Management

Inter-RAT RRM is primarily concerned with the management of radio resources in connection with inter-RAT mobility, notably inter-RAT handover. At inter-RAT handover, the handover decision may take into account the involved RATs resource situation as well as UE capabilities and Operator policies. The importance of Inter-RAT RRM may depend on the specific scenario in which E-UTRAN is deployed. Inter-RAT RRM may also include functionality for inter-RAT load balancing for idle and connected mode UEs.

### 16.1.8 Subscriber Profile ID for RAT/Frequency Priority

The RRM strategy in E-UTRAN may be based on user specific information.

The Subscriber Profile ID for RAT/Frequency Priority (SPID) parameter received by the eNB via the S1 interface or the X2 interface is an index referring to user information (e.g. mobility profile, service usage profile). The information is UE specific and applies to all its Radio Bearers.

This index is mapped by the eNB to locally defined configuration in order to apply specific RRM strategies (e.g. to define RRC_IDLE mode priorities and control inter-RAT/inter frequency handover in RRC_CONNECTED mode).



Samsung Exhibit 1015, Page 120 of 198
Samsung Electronics Co., Ltd. v. Asus Technology Licensing Inc.
IPR2024-01217

## 16.2 RRM architecture

### 16.2.1 Centralised Handling of certain RRM Functions

Void.

### 16.2.2 De-Centralised RRM

#### 16.2.2.1 UE History Information

The source eNB collects and stores the UE History Information for as long as the UE stays in one of its cells.

When information needs to be discarded because the list is full, such information will be discarded in order of its position in the list, starting with the oldest cell record.

The resulting information is then used in subsequent handover preparations by means of the Handover Preparation procedures over the S1 and X2 interfaces, which provide the target eNB with a list of previously visited cells and associated (per-cell) information elements. The Handover Preparation procedures also trigger the target eNB to start collection and storage of UE history Information and thus to propagate the collected information.

### 16.2.3 Void

# 17 Void

## 17.1 Void

# 18 UE capabilities

RRC signalling carries AS capabilities and NAS signalling carries NAS capabilities. The UE capability information is stored in the MME. In the uplink, no capability information is sent early in e.g. RRCConnectionRequest message. In the downlink, enquiry procedure of the UE capability is supported.



Samsung Exhibit 1015, Page 121 of 198
Samsung Electronics Co., Ltd. v. Asus Technology Licensing Inc.
IPR2024-01217

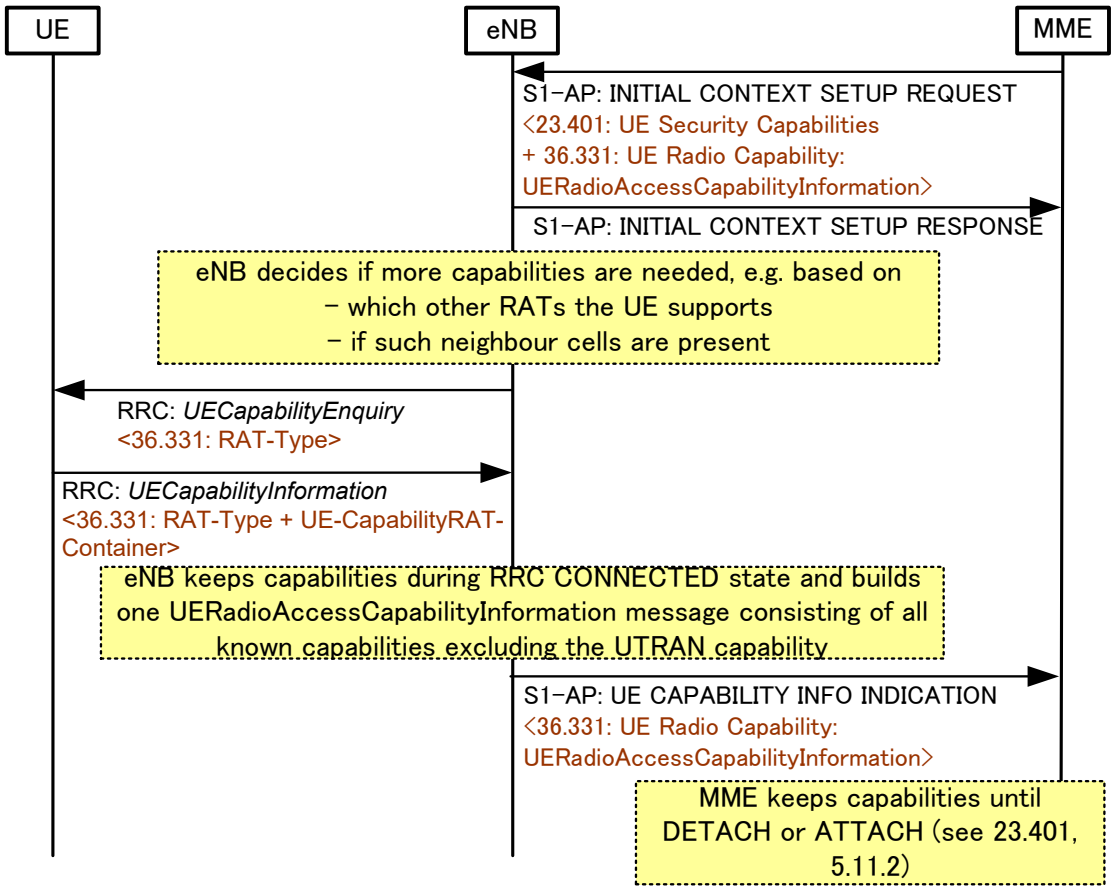


**Figure 18-1: Initial UE Capability Handling**

The MME stores the UE Radio Capability uploaded in the UE CAPABILITY INFO INDICATION message.

The possible RAT-Types in Rel-8 are: EUTRAN, UTRAN, GERAN-PS, GERAN-CS, CDMA2000-1XRTT. The GERAN capability is divided into separate parts. MS Classmark 2 and Classmark 3 are used for CS domain (in both AS and NAS) and MS Radio Access Capability is used for PS domain. The main part of CDMA2000 capabilities is not handled by the eNB or the MME, but is exchanged via tunnelling (see 10.3.2). The small part of CDMA2000 capabilities (for CDMA2000-1XRTT) is needed for the eNB to be able to build messages for the target CDMA2000 RNC (see 10.3.2).

The eNB may acquire the UE capabilities after a Handover completion. The UE capabilities are then uploaded to the MME.

Usually during handover preparation, the source RAN node transfers both the UE source RAT capabilities and the target RAT capabilities to the target RAN node, in order to minimize interruptions and to follow the principles in subclause 10.2.2. This is described in subclause 19.2.2.5.6. However at Handover from UTRAN to EUTRAN, it is optional to forward the UTRAN capabilities to the target RAN. The source RAN is not mandated to acquire other RAT capabilities (i.e. other than the source and target RAT capabilities) in order to start a handover preparation.

The UTRAN capabilities, i.e. the INTER RAT HANDOVER INFO, include START-CS, START-PS and "predefined configurations", which are "dynamic" IEs. In order to avoid the START values desynchronisation and the key replaying issue, the eNB always enquiry the UE UTRAN capabilities at transition from RRC_IDLE to RRC_CONNECTED and before Handover to UTRAN. The eNB does not upload the UE UTRAN capabilities to the MME.



Samsung Exhibit 1015, Page 122 of 198
Samsung Electronics Co., Ltd. v. Asus Technology Licensing Inc.
IPR2024-01217

# 19 S1 Interface

## 19.1 S1 User plane

The S1 user plane interface (S1-U) is defined between the eNB and the S-GW. The S1-U interface provides non guaranteed delivery of user plane PDUs between the eNB and the S-GW. The user plane protocol stack on the S1 interface is shown in Figure 19.1-1. The transport network layer is built on IP transport and GTP-U is used on top of UDP/IP to carry the user plane PDUs between the eNB and the S-GW.

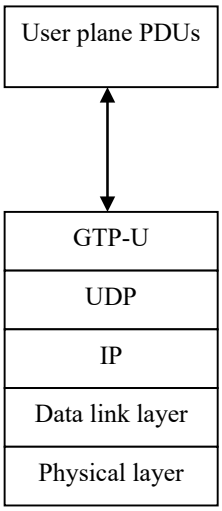


**Figure 19.1-1: S1 Interface User Plane (eNB - S-GW)**

## 19.2 S1 Control Plane

The S1 control plane interface (S1-MME) is defined between the eNB and the MME. The control plane protocol stack of the S1 interface is shown on Figure 19.2-1. The transport network layer is built on IP transport, similarly to the user plane but for the reliable transport of signalling messages SCTP is added on top of IP. The application layer signalling protocol is referred to as S1-AP (S1 Application Protocol).

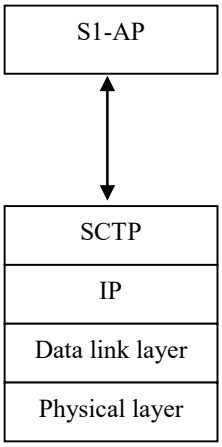


**Figure 19.2-1: S1 Interface Control Plane (eNB-MME)**

The SCTP layer provides the guaranteed delivery of application layer messages.

In the transport IP layer point-to-point transmission is used to deliver the signalling PDUs.



Samsung Exhibit 1015, Page 123 of 198
Samsung Electronics Co., Ltd. v. Asus Technology Licensing Inc.
IPR2024-01217

A single SCTP association per S1-MME interface instance shall be used with one pair of stream identifiers for S1-MME common procedures. Only a few pairs of stream identifiers should be used for S1-MME dedicated procedures. MME communication context identifiers that are assigned by the MME for S1-MME dedicated procedures and eNB communication context identifiers that are assigned by the eNB for S1-MME dedicated procedures shall be used to distinguish UE specific S1-MME signalling transport bearers. The communication context identifiers are conveyed in the respective S1-AP messages.

RNs terminate S1-AP. In this case, there is one S1 interface relation between the RN and the DeNB, and one S1 interface relation between the DeNB and each of the MMEs in the MME pool. The S1 interface relation between the RN and the DeNB carries non-UE-associated S1-AP signalling between RN and DeNB and UE-associated S1-AP signalling for UEs connected to the RN. The S1 interface relation between the DeNB and an MME carries non-UE-associated S1-AP signalling between DeNB and MME and UE-associated S1-AP signalling for UEs connected to the RN and for UEs connected to the DeNB.

### 19.2.1 S1 Interface Functions

The S1 interface provides the following functions:

- E-RAB Service Management function:
  - Setup, Modify, Release.
- Mobility Functions for UEs in ECM-CONNECTED:
  - Intra-LTE Handover;
  - Inter-3GPP-RAT Handover.
- S1 Paging function:
- NAS Signalling Transport function;
- LPPa Signalling Transport function;
- S1-interface management functions:
  - Error indication;
  - Reset.
- Network Sharing Function;
- Roaming and Area Restriction Support function;
- NAS Node Selection Function;
- Initial Context Setup Function;
- UE Context Modification Function;
- MME Load balancing Function;
- Location Reporting Function;
- PWS (which includes ETWS and CMAS) Message Transmission Function;
- Overload function;
- RAN Information Management Function;
- Configuration Transfer Function;
- S1 CDMA2000 Tunnelling function;
- Trace function.



Samsung Exhibit 1015, Page 124 of 198
Samsung Electronics Co., Ltd. v. Asus Technology Licensing Inc.
IPR2024-01217

#### 19.2.1.1 S1 Paging function

The paging function supports the sending of paging requests to all cells of the TA(s) the UE is registered.

Paging requests are sent to the relevant eNBs according to the mobility information kept in the UE's MM context in the serving MME.

#### 19.2.1.2 S1 UE Context Management function

In order to support UEs in ECM-CONNECTED, UE contexts need to be managed, i.e. established and released in the eNodeB and in the EPC to support user individual signalling on S1.

#### 19.2.1.3 Initial Context Setup Function

The Initial Context Setup function supports the establishment of the necessary overall initial UE Context including E-RAB context, Security context, roaming restriction, UE capability information, Subscriber Profile ID for RAT/Frequency Priority, UE S1 signalling connection ID, etc. in the eNB to enable fast Idle-to-Active transition.

In addition to the setup of overall initial UE Contexts, Initial Context Setup function also supports the piggy-backing of the corresponding NAS messages. Initial Context Setup is initiated by the MME.

#### 19.2.1.3a UE Context Modification Function

The UE Context Modification function supports the modification of UE Context in eNB for UEs in active state.

#### 19.2.1.4 Mobility Functions for UEs in ECM-CONNECTED

##### 19.2.1.4.1 Intra-LTE Handover

The Intra-LTE-Handover function supports mobility for UEs in ECM-CONNECTED and comprises the preparation, execution and completion of handover via the X2 and S1 interfaces.

##### 19.2.1.4.2 Inter-3GPP-RAT Handover

The Inter-3GPP-RAT Handover function supports mobility to and from other 3GPP-RATs for UEs in ECM-CONNECTED and comprises the preparation, execution and completion of handover via the S1 interface.

#### 19.2.1.5 E-RAB Service Management function

The E-RAB Service management function is responsible for establishing, modifying and releasing E-UTRAN resources for user data transport once a UE context is available in the eNB. The establishment and modification of E-UTRAN resources is triggered by the MME and requires respective QoS information to be provided to the eNB. The release of E-UTRAN resources is triggered by the MME either directly or following a request received from the eNB (optional).

#### 19.2.1.6 NAS Signalling Transport function

The NAS Signalling Transport function provides means to transport a NAS message (e.g. for NAS mobility management) for a specific UE on the S1 interface.

#### 19.2.1.7 NAS Node Selection Function (NNSF)

The interconnection of eNBs to multiple MME/Serving S-GWs is supported in the E-UTRAN/EPC architecture. Therefore a NAS node selection function is located in the eNB to determine the MME association of the UE, based on the UE's temporary identifier, which was assigned to the UE by the CN node (e.g. MME or SGSN).

NOTE: In case the UE's temporary identifier is assigned by the SGSN, respective mapping rules are defined in [26].



Samsung Exhibit 1015, Page 125 of 198
Samsung Electronics Co., Ltd. v. Asus Technology Licensing Inc.
IPR2024-01217

Depending on the actual scenario the NNSF determines the UE's MME association either based its S-TMSI (e.g. at service request) or based on its GUMMEI and selected PLMN (e.g. at attach or tracking area update in non-registered TA).

This functionality is located in the eNB only and enables proper routing via the S1 interface. On S1, no specific procedure corresponds to the NAS Node Selection Function.

#### 19.2.1.8 S1-interface management functions

The S1-interface management functions provide

- means to ensure a defined start of S1-interface operation (reset)
- means to handle different versions of application part implementations and protocol errors (error indication)

#### 19.2.1.9 MME Load balancing Function

MME Load balancing is the function which achieves load-balanced MMEs with respect to their processing capacity within a pool area during system operation. The means to load-balance MMEs is to distribute UEs newly entering the pool to different MMEs in the MME pool. In addition the MME load balancing function is able to achieve equally loaded MMEs within a pool area after the introduction of a new MME and after the removal of a MME from the network.

The support of the MME load balancing function is achieved by indicating the relative MME capacity in the S1 Setup procedure to all eNBs served by the MMEs of the pool area per MME. In order to support the introduction and/or removal of MMEs the MME initiated S1 setup update procedure may be used by the operator indicating relative MME capacity value changes. The indicated relative MME capacity steers the UE assignment for UEs newly entering the MME pool.

#### 19.2.1.10 Location Reporting Function

The Location Reporting function supports the MME requests to the eNB to report the location information of the UE.

#### 19.2.1.11 Warning Message Transmission function

The warning message transmission function provides means to transfer warning message via S1 interface.

#### 19.2.1.12 Overload Function

The overload function comprises the signalling means:

- to indicate to a proportion of eNBs that the serving MME is overloaded
- to indicate to the eNBs that the serving MME is back in the "normal operation mode"

#### 19.2.1.13 RAN Information Management Function

The RAN Information Management (RIM) function is a generic mechanism that allows the request and transfer of information (e.g. GERAN System information) between two RAN nodes via the core network.

#### 19.2.1.14 S1 CDMA2000 Tunnelling function

The S1 CDMA2000 Tunnelling function transports CDMA2000 signalling between UE and CDMA2000 RAT over the S1 Interface for mobility from E-UTRAN to CDMA2000 HRPD and CDMA2000 1xRTT and for circuit switched fallback to CDMA2000 1xRTT.

#### 19.2.1.15 Configuration Transfer Function

The Configuration Transfer function is a generic mechanism that allows the request and transfer of RAN configuration information (e.g. SON information) between two RAN nodes via the core network.



Samsung Exhibit 1015, Page 126 of 198
Samsung Electronics Co., Ltd. v. Asus Technology Licensing Inc.
IPR2024-01217

#### 19.2.1.16 LPPa Signalling Transport function

The LPPa Signalling Transport function provides means to transport an LPPa message on the S1 interface.

#### 19.2.1.17 Trace Function

The Trace function provides means to control trace sessions in the eNB.

### 19.2.2 S1 Interface Signalling Procedures

The elementary procedures supported by the S1AP protocol are listed in Table 1 and Table 2 of TS 36.413 [25].

#### 19.2.2.1 Paging procedure

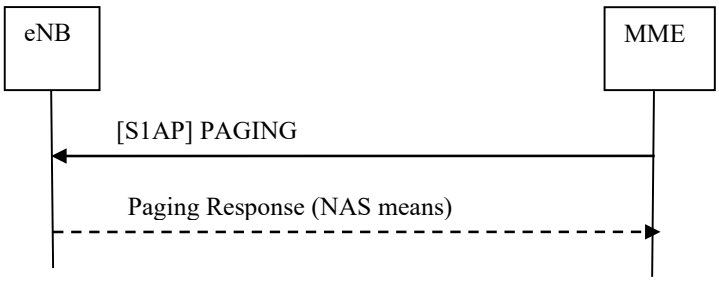


**Figure 19.2.2.1-1: Paging procedure**

The MME initiates the paging procedure by sending the PAGING message to each eNB with cells belonging to the tracking area(s) in which the UE is registered. Each eNB can contain cells belonging to different tracking areas, whereas each cell can only belong to one TA.

The paging response back to the MME is initiated on NAS layer and is sent by the eNB based on NAS-level routing information.

#### 19.2.2.2 S1 UE Context Release procedure

The S1 UE Context Release procedure causes the eNB to remove all UE individual signalling resources and the related user data transport resources. This procedure is initiated by the EPC and may be triggered on request of the serving eNB.

##### 19.2.2.2.1 S1 UE Context Release (EPC triggered)

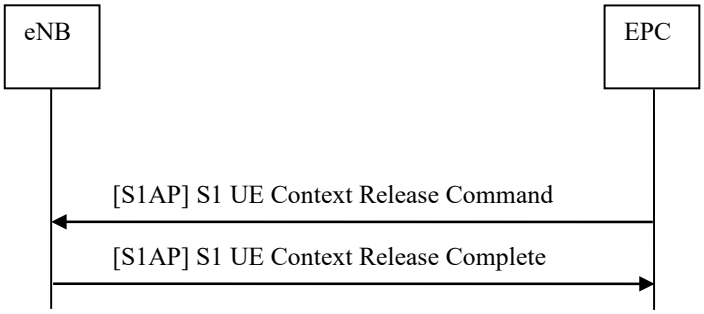


**Figure 19.2.2.2.1-1: S1 UE Context Release procedure (EPC triggered)**

- The EPC initiates the UE Context Release procedure by sending the S1 UE Context Release Command towards the E-UTRAN. The eNodeB releases all related signalling and user data transport resources.



Samsung Exhibit 1015, Page 127 of 198
Samsung Electronics Co., Ltd. v. Asus Technology Licensing Inc.
IPR2024-01217

- The eNB confirms the S1 UE Context Release activity with the S1 UE Context Release Complete message.
- In the course of this procedure the EPC releases all related resources as well, except context resources in the EPC for mobility management and the default EPS Bearer/E-RAB configuration.

#### 19.2.2.2.2 S1 UE Context Release Request (eNB triggered)

The S1 UE Context Release Request procedure is initiated for E-UTRAN internal reasons and comprises the following steps:

- The eNB sends the S1 UE Context Release Request message to the EPC.
- The EPC triggers the EPC initiated UE context release procedure.

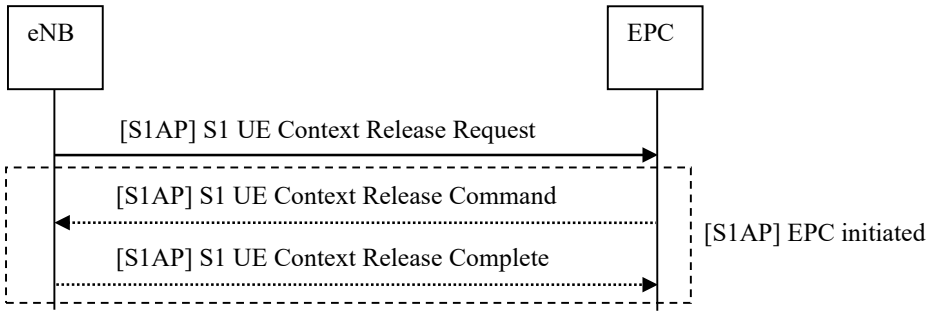


**Figure 19.2.2.2.2-1: S1 UE Context Release Request procedure (eNB triggered) and subsequent S1 UE Context Release procedure (EPC triggered)**

If the E-UTRAN internal reason is a radio link failure detected in the eNB, the eNB shall wait a sufficient time before triggering the S1 UE Context Release Request procedure in order to allow the UE to perform the NAS recovery procedure [17].

### 19.2.2.3 Initial Context Setup procedure

The Initial Context Setup procedure establishes the necessary overall initial UE context in the eNB in case of an Idle-to Active transition. The Initial Context Setup procedure is initiated by the MME.

The Initial Context Setup procedure comprises the following steps:

- The MME initiates the Initial Context Setup procedure by sending INITIAL CONTEXT SETUP REQUEST to the eNB. This message may include general UE Context (e.g. security context, roaming restrictions, UE capability information, UE S1 signalling connection ID, etc.), E-RAB context (Serving GW TEID, QoS information, Correlation id i.e. collocated L-GW TEID in case of LIPA support), and may be piggy-backed with the corresponding NAS messages. When there are multiple NAS messages in the INITIAL CONTEXT SETUP REQUEST message, the MME shall ensure that the NAS messages in the E-RAB to be Setup List are aligned in the order of reception from the NAS layer to ensure the in-sequence delivery of the NAS messages.
- Upon receipt of INITIAL CONTEXT SETUP REQUEST, the eNB setup the context of the associated UE, and perform the necessary RRC signalling towards the UE, e.g. Radio Bearer Setup procedure. When there are multiple NAS messages to be sent in the RRC message, the order of the NAS messages in the RRC message shall be kept the same as that in the INITIAL CONTEXT SETUP REQUEST message.
- The eNB responds with INITIAL CONTEXT SETUP RESPONSE to inform a successful operation, and with INITIAL CONTEXT SETUP FAILURE to inform an unsuccessful operation.

NOTE: In case of failure, eNB and MME behaviours are not mandated. Both implicit release (local release at each node) and explicit release (MME-initiated UE Context Release procedure) may in principle be adopted. The eNB should ensure that no hanging resources remain at the eNB.



Samsung Exhibit 1015, Page 128 of 198
Samsung Electronics Co., Ltd. v. Asus Technology Licensing Inc.
IPR2024-01217

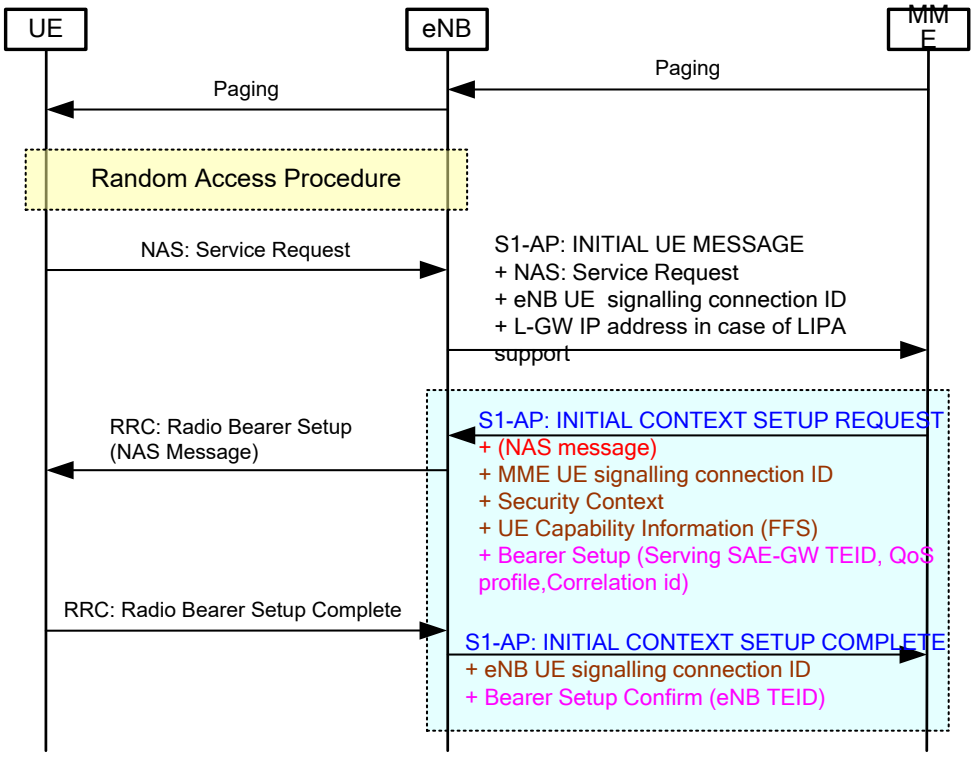


**Figure 19.2.2.3-1: Initial Context Setup procedure (highlighted in blue) in Idle-to-Active procedure**

### 19.2.2.3a UE Context Modification procedure

The UE Context Modification procedure enables the MME to modify the UE context in the eNB for UEs in active state. The UE Context Modification procedure is initiated by the MME.

The UE Context Modification procedure comprises the following steps:

- The MME initiates the UE Context Modification procedure by sending UE CONTEXT MODIFICATION REQUEST to the eNB to modify the UE context in the eNB for UEs in active state.
- The eNB responds with UE CONTEXT MODIFICATION RESPONSE in case of a successful operation
  - If the UE is served by a CSG cell, and is no longer a member of the CSG cell, the eNB may initiate a handover to another cell. If the UE is not handed over, the eNB should request the release of UE context;
  - If the UE is served by a hybrid cell, and is no longer a CSG member of the hybrid cell, the eNB may provide the QoS for the UE as a non CSG member.
- The eNB responds with UE CONTEXT MODIFICATION FAILURE in case of an unsuccessful operation.



Samsung Exhibit 1015, Page 129 of 198
Samsung Electronics Co., Ltd. v. Asus Technology Licensing Inc.
IPR2024-01217

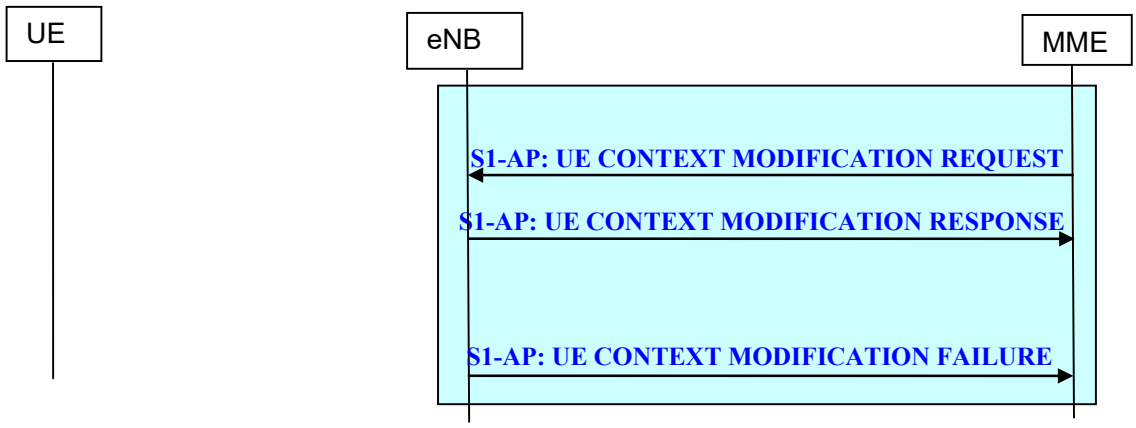


**Figure 19.2.2.3a-1: UE Context Modification procedure**

### 19.2.2.4 E-RAB signalling procedures

#### 19.2.2.4.1 E-RAB Setup procedure

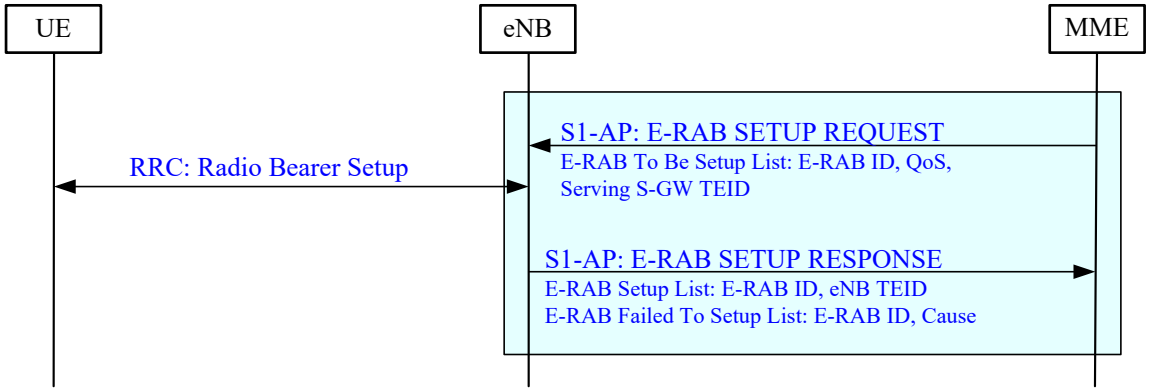


**Figure 19.2.2.4.1-1: E-RAB Setup procedure**

The E-RAB Setup procedure is initiated by the MME to support:

- Assignment of resources to a dedicated E-RAB.
- Assignment of resources for a default E-RAB.
- Setup of S1 Bearer (on S1) and Data Radio Bearer (on Uu).

The E-RAB Setup procedure comprises the following steps:

- The E-RAB SETUP REQUEST message is sent by the MME to the eNB to setup resources on S1 and Uu for one or several E-RAB(s). The E-RAB SETUP REQUEST message contains the Serving GW TEID, QoS indicator(s) and the corresponding NAS message per E-RAB within the E-RAB To Be Setup List. It may also include the Correlation id i.e. collocated L-GW TEID in case of LIPA support. When there are multiple NAS messages in the E-RAB SETUP REQUEST message, the MME shall ensure that the NAS messages in the E-RAB to be Setup List are aligned in the order of reception from the NAS layer to ensure the in-sequence delivery of the NAS messages.
- Upon receipt of the E-RAB SETUP REQUEST message the eNB establishes the Data Radio Bearer(s) (RRC: Radio Bearer Setup) and resources for S1 Bearers. When there are multiple NAS messages to be sent in the



Samsung Exhibit 1015, Page 130 of 198
Samsung Electronics Co., Ltd. v. Asus Technology Licensing Inc.
IPR2024-01217

RRC message, the order of the NAS messages in the RRC message shall be kept the same as that in the E-RAB SETUP REQUEST message.

- The eNB responds with a E-RAB SETUP RESPONSE messages to inform whether the setup of resources and establishment of each E-RAB was successful or unsuccessful, with the E-RAB Setup list (E-RAB ID , eNB TEID) and the E-RAB Failed to Setup list (E-RAB ID, Cause) The eNB also creates the binding between the S1 bearer(s) (DL/UL TEID) and the Data Radio Bearer(s).

**Interactions with UE Context Release Request procedure:**

In case of no response from the UE the eNB shall trigger the S1 UE Context Release Request procedure.

#### 19.2.2.4.2 E-RAB Modification procedure

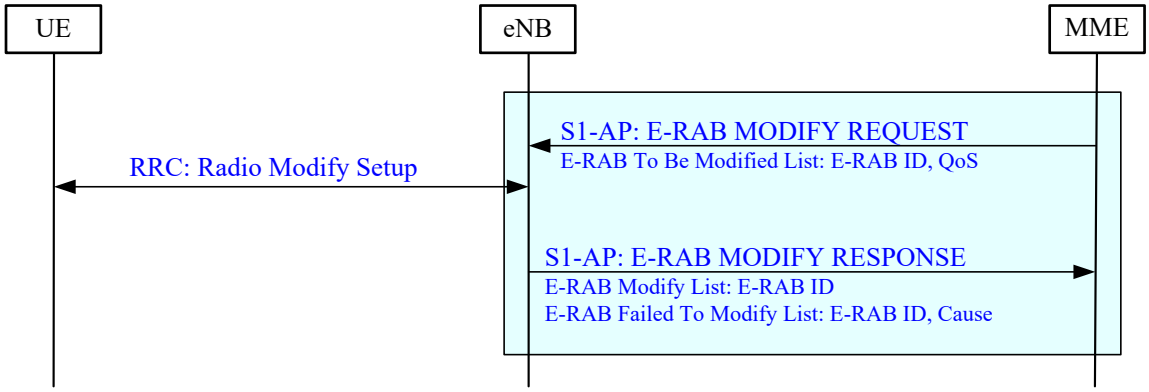


**Figure 19.2.2.4.2-1: E-RAB Modification procedure**

The E-RAB Modification procedure is initiated by the MME to support the modification of already established E-RAB configurations:

- Modify of S1 Bearer (on S1) and Radio Bearer (on Uu)

The EPS Bearer Modification procedure comprises the following steps:

- The E-RAB MODIFY REQUEST message is sent by the MME to the eNB to modify one or several E-RAB(s). The E-RAB MODIFY REQUEST message contains the QoS indicator(s), and the corresponding NAS message per E-RAB in the E-RAB To Be Modified List. When there are multiple NAS messages in the E-RAB MODIFY REQUEST message, the MME shall ensure that the NAS messages in the E-RAB to be Modified List are aligned in the order of reception from the NAS layer to ensure the in-sequence delivery of the NAS messages.

- Upon receipt of the E-RAB MODIFY REQUEST message the eNB modifies the Data Radio Bearer configuration (RRC procedure to modify the Data Radio bearer). When there are multiple NAS messages to be sent in the RRC message, the order of the NAS messages in the RRC message shall be kept the same as that in the E-RAB MODIFY REQUEST message.

- The eNB responds with an E-RAB MODIFY RESPONSE message to inform whether the E-RAB modification has succeeded or not indicating with the E-RAB Modify list and E-RAB Failed to Modify list. With E-RAB ID(s) in the E-RAB Modify List or E-RAB Failed to Modify List the eNB identifies the E-RAB(s) successfully modified or failed to modify.

**Interactions with UE Context Release Request procedure:**

In case of no response from the UE the eNB shall trigger the S1 UE Context Release Request procedure.



Samsung Exhibit 1015, Page 131 of 198
Samsung Electronics Co., Ltd. v. Asus Technology Licensing Inc.
IPR2024-01217

### 19.2.2.4.3 E-RAB Release procedure

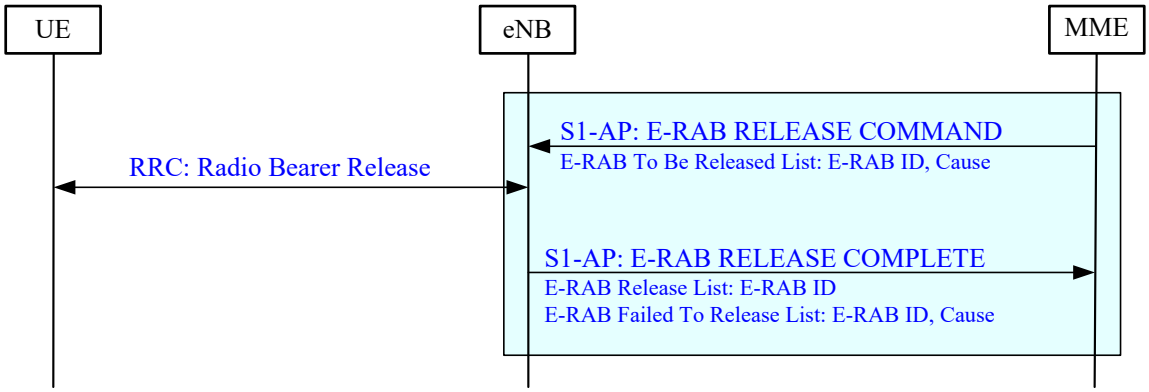


**Figure 19.2.2.4.3-1: E-RAB Release procedure**

The E-RAB Release procedure is initiated by the MME to release resources for the indicated E-RABs.

The E-RAB Release procedure comprises the following steps:

- The E-RAB RELEASE COMMAND message is sent by the MME to the eNB to release resources on S1 and Uu for one or several E-RAB(s). With the E-RAB ID(s) in the E-RAB To Be Released List contained in E-RAB RELEASE COMMAND message the MME identifies, the E-RAB(s) to be released.
- Upon receipt of the E-RAB RELEASE COMMAND message the eNB releases the Data Radio Bearers (RRC: Radio bearer release) and S1 Bearers.
- The eNB responds with an E-RAB RELEASE COMPLETE message containing E-RAB Release list and E-RAB Failed to Release list. With the E-RAB IDs in the E-RAB Release List/E-RAB Failed to Release List the eNB identifies the E-RAB(s) successfully released or failed to release.

**Interactions with UE Context Release Request procedure:**

In case of no response or negative response from the UE or in case the eNB cannot successfully perform the release of any of the requested bearers, the eNB shall trigger the S1 UE Context Release Request procedure, except if the eNB has already initiated the procedures associated with X2 Handover.

### 19.2.2.4.4 E-RAB Release Indication procedure

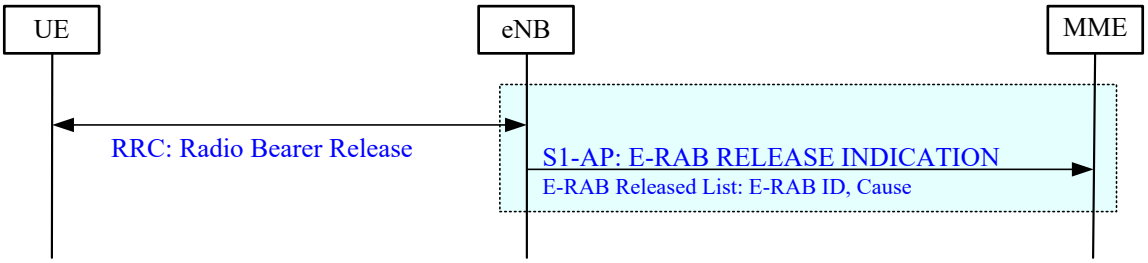


**Figure 19.2.2.4.4-1: E-RAB Release Indication procedure**



Samsung Exhibit 1015, Page 132 of 198
Samsung Electronics Co., Ltd. v. Asus Technology Licensing Inc.
IPR2024-01217

The E-RAB Release Indication procedure enables the E-UTRAN to send information about released resources for one or several E-RABs to the MME. The eNB initiates the procedure by sending the E-RAB RELEASE INDICATION message to the MME. The E-RAB ID(s) in the E-RAB Released List identifies the released E-RAB(s) in the eNB.

### 19.2.2.5 Handover signalling procedures

Handover signalling procedures support both, inter-eNB handover and inter-RAT handover.

Inter-RAT handovers shall be initiated via the S1 interface.

Inter-eNB handovers shall be initiated via the X2 interface except if any of the following conditions are true:

- there is no X2 between source and target eNB.
- the source eNB has been configured to initiate handover to the particular target eNB via S1 interface in order to enable the change of an EPC node (MME and/or Serving GW).
- the source eNB has attempted to start the inter-eNB HO via X2 but receives a negative reply from the target eNB with a specific cause value.

Inter-eNB handovers shall be initiated via the S1 interface, if one of the above conditions applies.

#### 19.2.2.5.1 Handover Preparation procedure

The Handover preparation procedure is initiated by the source eNB if it determines the necessity to initiate the handover via the S1 interface.

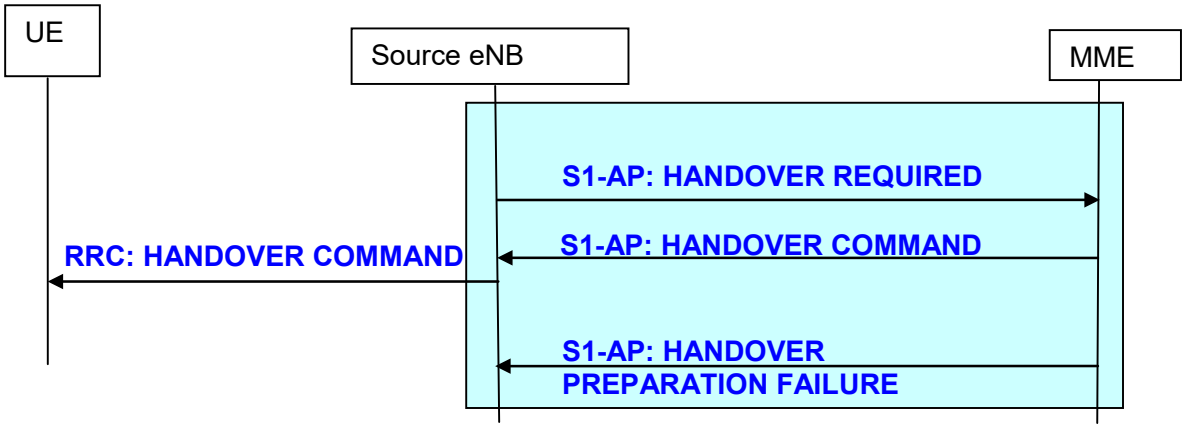


**Figure 19.2.2.5.1-1: Handover preparation procedure**

The handover preparation comprises the following steps:

- The HANDOVER REQUIRED message is sent to the MME.
- The handover preparation phase is finished upon the reception of the HANDOVER COMMAND message in the source eNB, which includes at least radio interface related information (HO Command for the UE), successfully established E-RAB(s) and E-RAB(s) which failed to setup.
- In case the handover resource allocation is not successful (e.g. no resources are available on the target side) the MME responds with the HANDOVER PREPARATION FAILURE message instead of the HANDOVER COMMAND message.

#### 19.2.2.5.2 Handover Resource Allocation procedure

The handover resource allocation comprises the following steps:



Samsung Exhibit 1015, Page 133 of 198
Samsung Electronics Co., Ltd. v. Asus Technology Licensing Inc.
IPR2024-01217

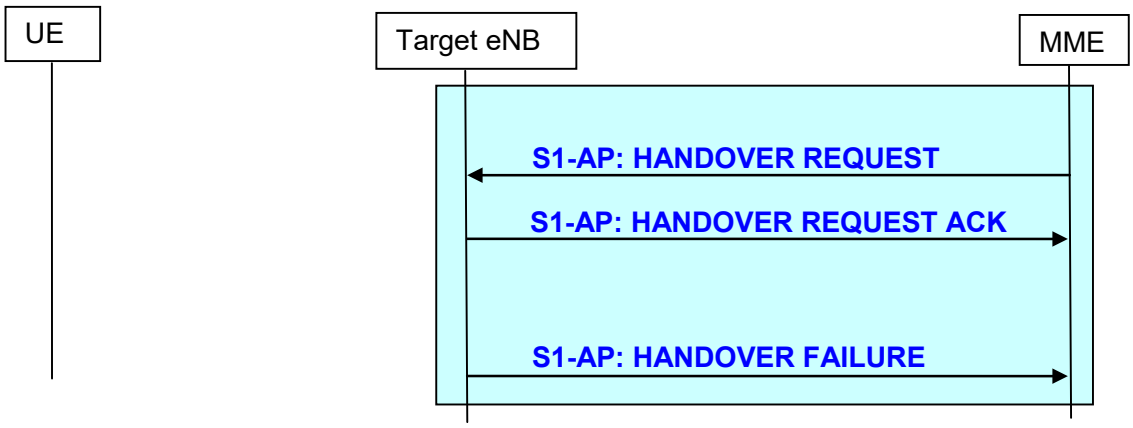


**Figure 19.2.2.5.2-1: Handover resource allocation procedure**

- The MME sends the HANDOVER REQUEST message including the E-RAB(s) which needs to be setup by the target eNB.

  In the case of a UE performing handover toward an RN, the HANDOVER REQUEST is received by the DeNB, which shall read the target cell ID from the message, find the target RN corresponding to the target cell ID, and forward the message toward the target RN.

- The target eNB responds with the HANDOVER REQUEST ACK message after the required resources for all accepted E-RABs are allocated. The HANDOVER REQUEST ACK message contains successfully established E-RAB(s), E-RAB(s) which failed to setup and radio interface related information (HO Command for the UE), which is later sent transparently via the EPC/CN from the target RAT to the source RAT.

  If no resources are available on the target side, the target eNB responds with the HANDOVER FAILURE message instead of the HANDOVER REQUEST ACK message.

### 19.2.2.5.3 Handover Notification procedure

The Handover Completion for S1 initiated handovers comprises the following steps:

- The HANDOVER NOTIFY message is sent by the target eNB to the MME when the UE has successfully been transferred to the target cell.

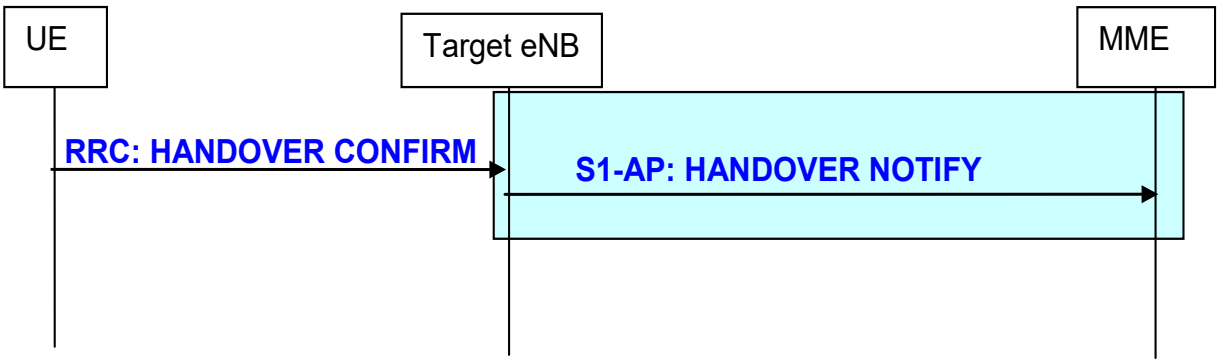


**Figure 19.2.2.5.3-1: Handover completion procedure**

### 19.2.2.5.4 Handover Cancellation

This functionality is located in the source eNB to allow a final decision regarding the outcome of the handover, i.e. either to proceed or to cancel the handover procedure.



Samsung Exhibit 1015, Page 134 of 198
Samsung Electronics Co., Ltd. v. Asus Technology Licensing Inc.
IPR2024-01217

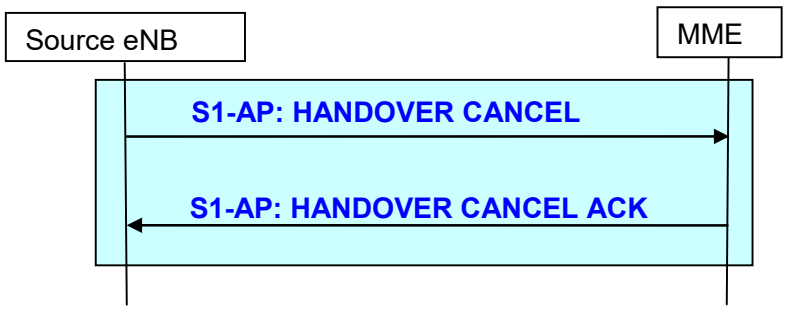


**Figure 19.2.2.5.4-1: Handover cancellation procedure**

- The source eNB sends a HANDOVER CANCEL message to the MME indicating the reason for the handover cancellation.
- The MME confirms the reception of the HANDOVER CANCEL message by returning the HANDOVER CANCEL ACK message.

### 19.2.2.5.5 Path Switch procedure

The handover completion phase for X2 initiated handovers comprises the following steps:

- The PATH SWITCH message is sent by the target eNB to the MME when the UE has successfully been transferred to the target cell. The PATH SWITCH message includes the outcome of the resource allocation: successfully established E-RAB(s).
- The MME responds with the PATH SWITCH ACK message which is sent to the eNB.
- The MME responds with the PATH SWITCH FAILURE message in case a failure occurs in the EPC.

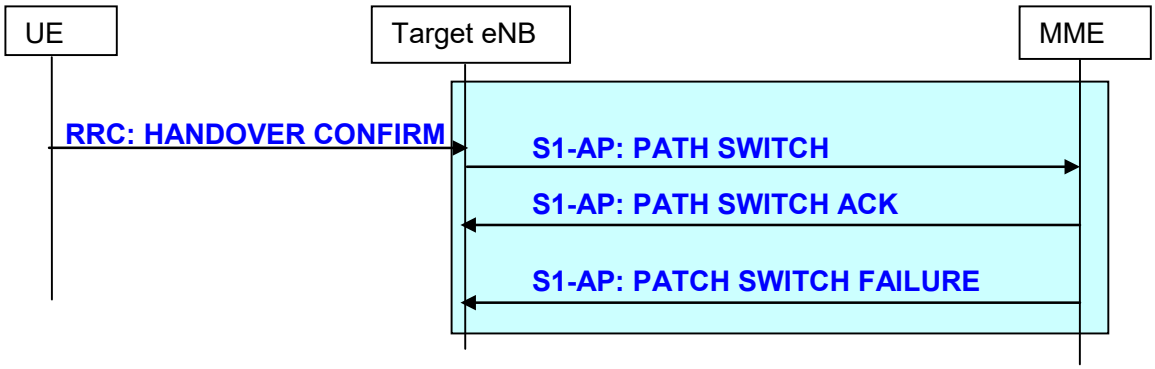


**Figure 19.2.2.5.5-1: Path Switch procedure**

### 19.2.2.5.6 Message sequence diagrams

This subclause complements TR 25.922 [27] subclause 5.1.7.2 regarding the E-UTRAN handling of containers.

Most RRC information is carried by means of containers across interfaces other than Uu. The following sequence diagrams illustrate which RRC information should be included within these containers used across the different network interfaces.

NOTE: In order to maintain independence between protocols, no requirements are included in the interface protocols that are used to transfer the RRC information.

In Rel-8 SRVCC (see TS 23.216 [28]) is supported from EUTRAN to UTRAN or GERAN A/Gb mode, but not in the other direction.

There is no support for interworking between EUTRAN and GERAN Iu-mode and between EUTRAN and GAN.

Figure 19.2.2.5.6-1 illustrates the message sequence for the PS handover from GERAN to EUTRAN procedure:



Samsung Exhibit 1015, Page 135 of 198
Samsung Electronics Co., Ltd. v. Asus Technology Licensing Inc.
IPR2024-01217

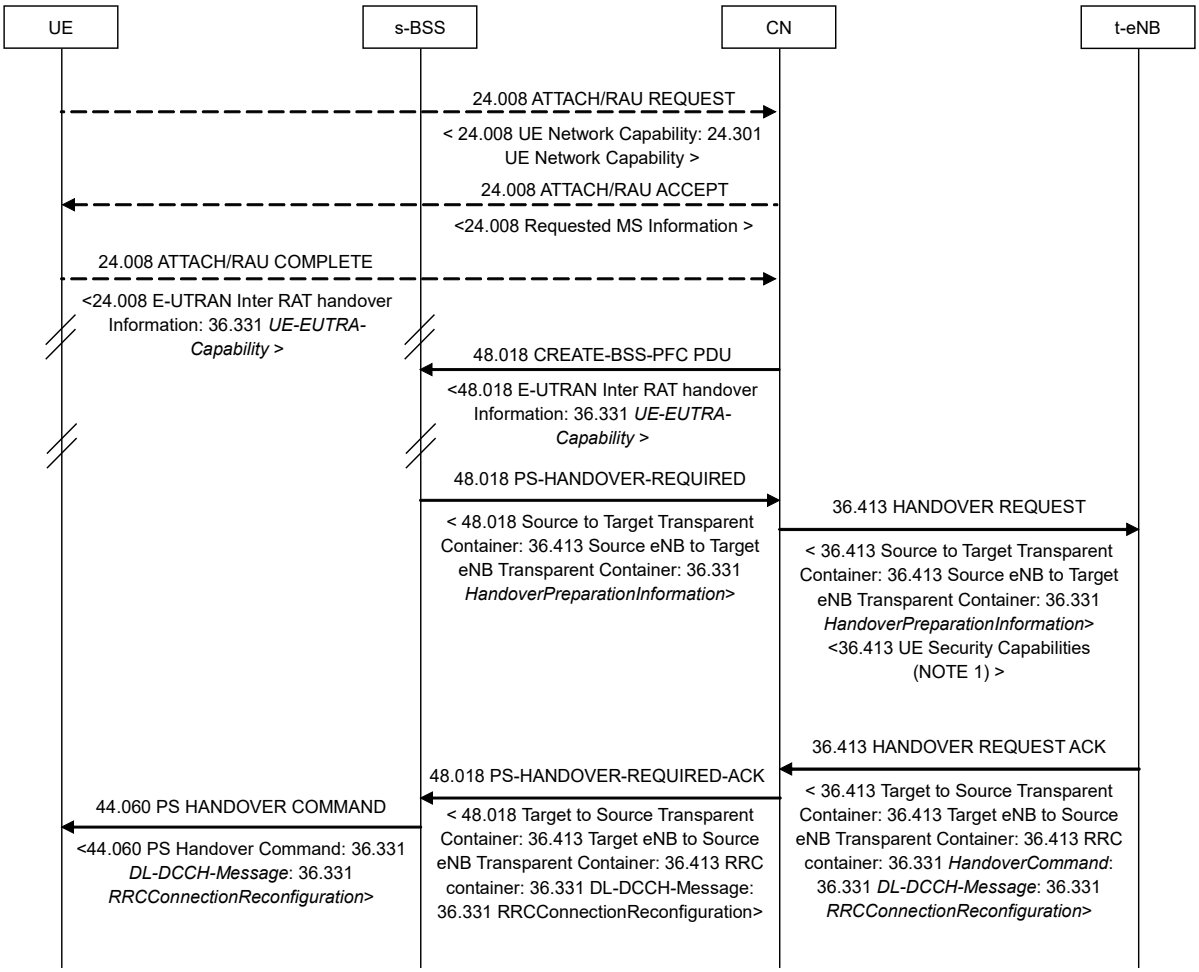


NOTE 1: The information included in this IE is derived from the information provided in the “UE Network Capability” IE during network attach / RAU

**Figure 19.2.2.5.6-1. Handover of PS domain service from GERAN A/Gb mode to EUTRAN, normal flow**

The first two signalling arrows indicate how capability information, which is needed by the target eNB, is provided by NAS.

Figure 19.2.2.5.6-2 illustrates the message sequence for the PS handover from UTRAN to EUTRAN procedure:



Samsung Exhibit 1015, Page 136 of 198
Samsung Electronics Co., Ltd. v. Asus Technology Licensing Inc.
IPR2024-01217

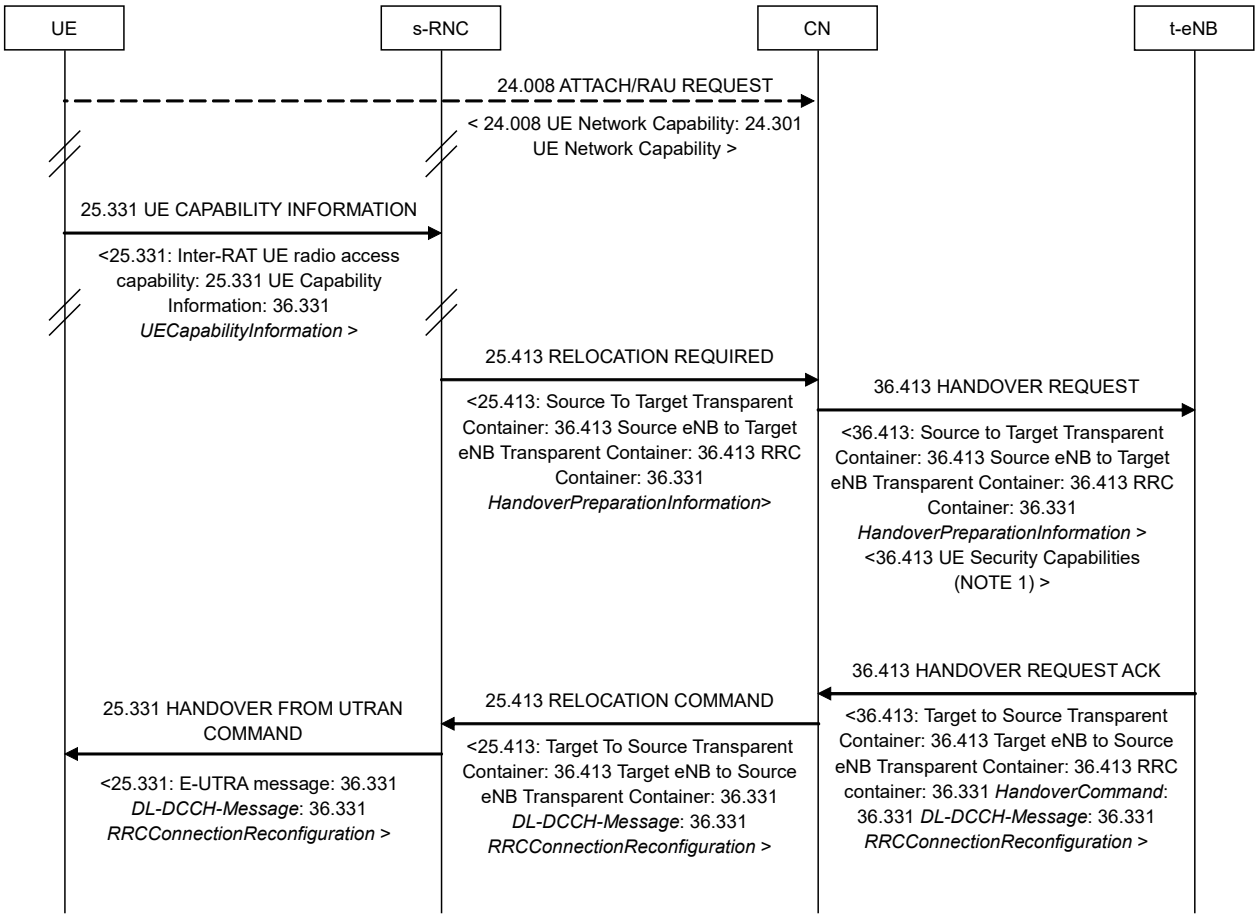


NOTE 1: The information included in this IE is derived from the information provided in the “UE Network Capability” IE during network attach / RAU

**Figure 19.2.2.5.6-2: Handover of PS domain service from UTRAN to EUTRAN, normal flow**

Figure 19.2.2.5.6-3 to Figure 19.2.2.5.6-5 illustrate the message sequence for the handover from EUTRAN to GERAN A/Gb mode procedure:



Samsung Exhibit 1015, Page 137 of 198
Samsung Electronics Co., Ltd. v. Asus Technology Licensing Inc.
IPR2024-01217

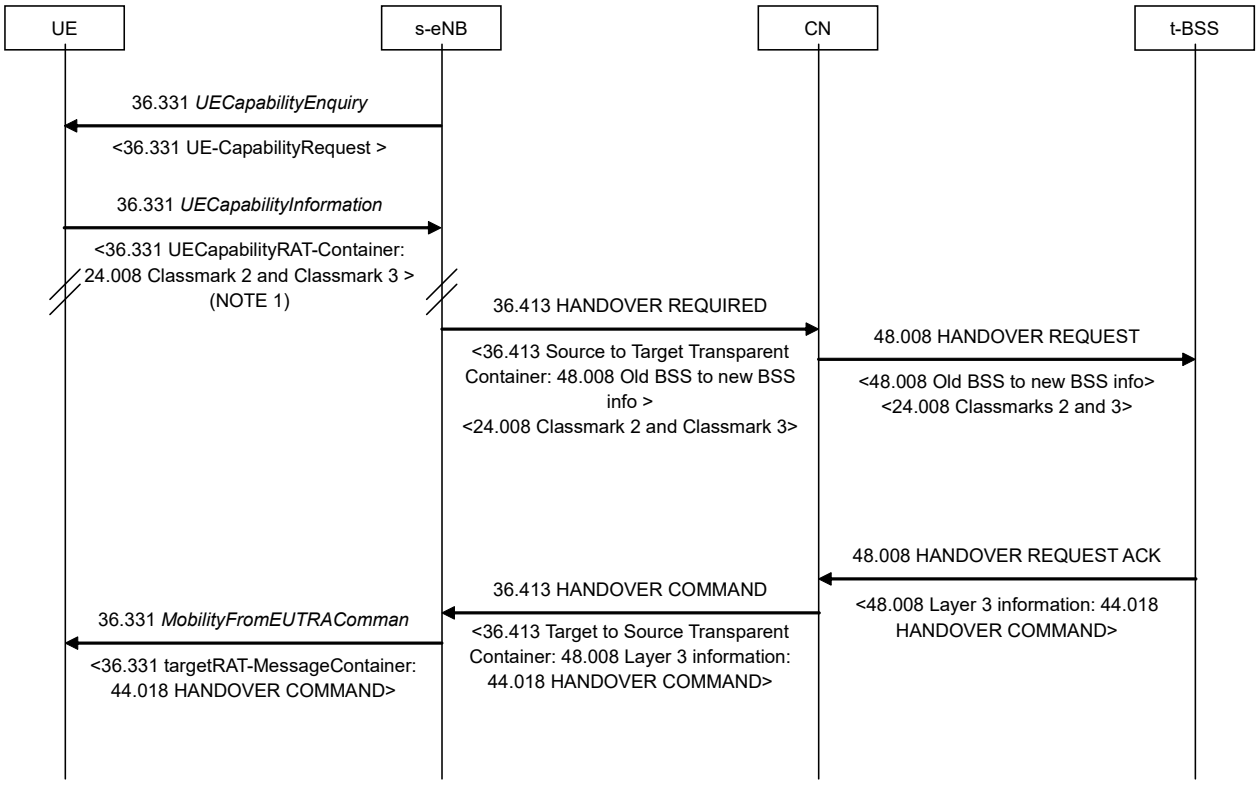


NOTE 1: the GERAN capabilities can be stored by the MME at an earlier opportunity, as shown in Figure 18-1, and transferred to the eNB at connection setup.

**Figure 19.2.2.5.6-3: Handover of CS domain service from EUTRAN to GERAN A/Gb mode, normal flow**



Samsung Exhibit 1015, Page 138 of 198
Samsung Electronics Co., Ltd. v. Asus Technology Licensing Inc.
IPR2024-01217

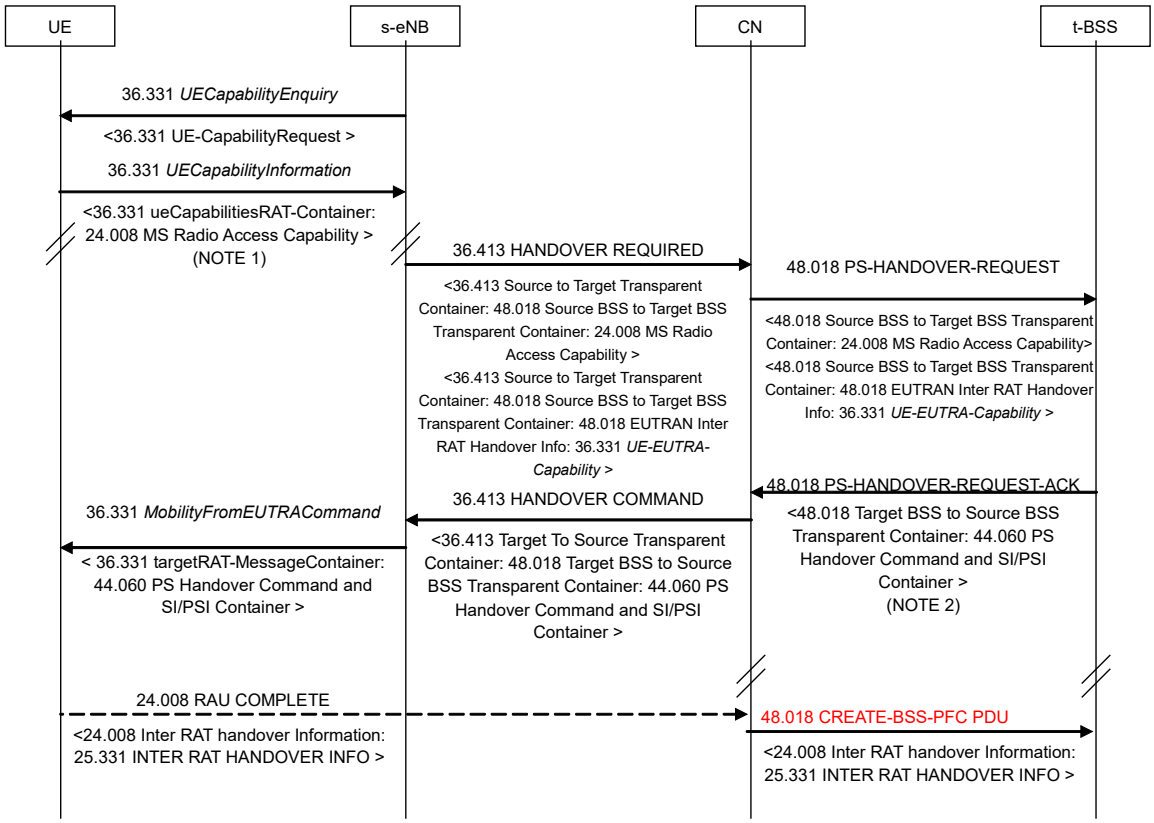


NOTE 1: the GERAN capabilities can be stored by the MME at an earlier opportunity, as shown in Figure 18-1, and transferred to the eNB at connection setup.
NOTE 2: the inclusion of GERAN SI/PSI is dependent on the PS Handover Indication in the Source BSS to Target BSS Transparent Container in the HANDOVER REQUIRED message.

**Figure 19.2.2.5.6-4. Handover of PS domain service from EUTRAN to GERAN A/Gb mode, normal flow**



Samsung Exhibit 1015, Page 139 of 198
Samsung Electronics Co., Ltd. v. Asus Technology Licensing Inc.
IPR2024-01217

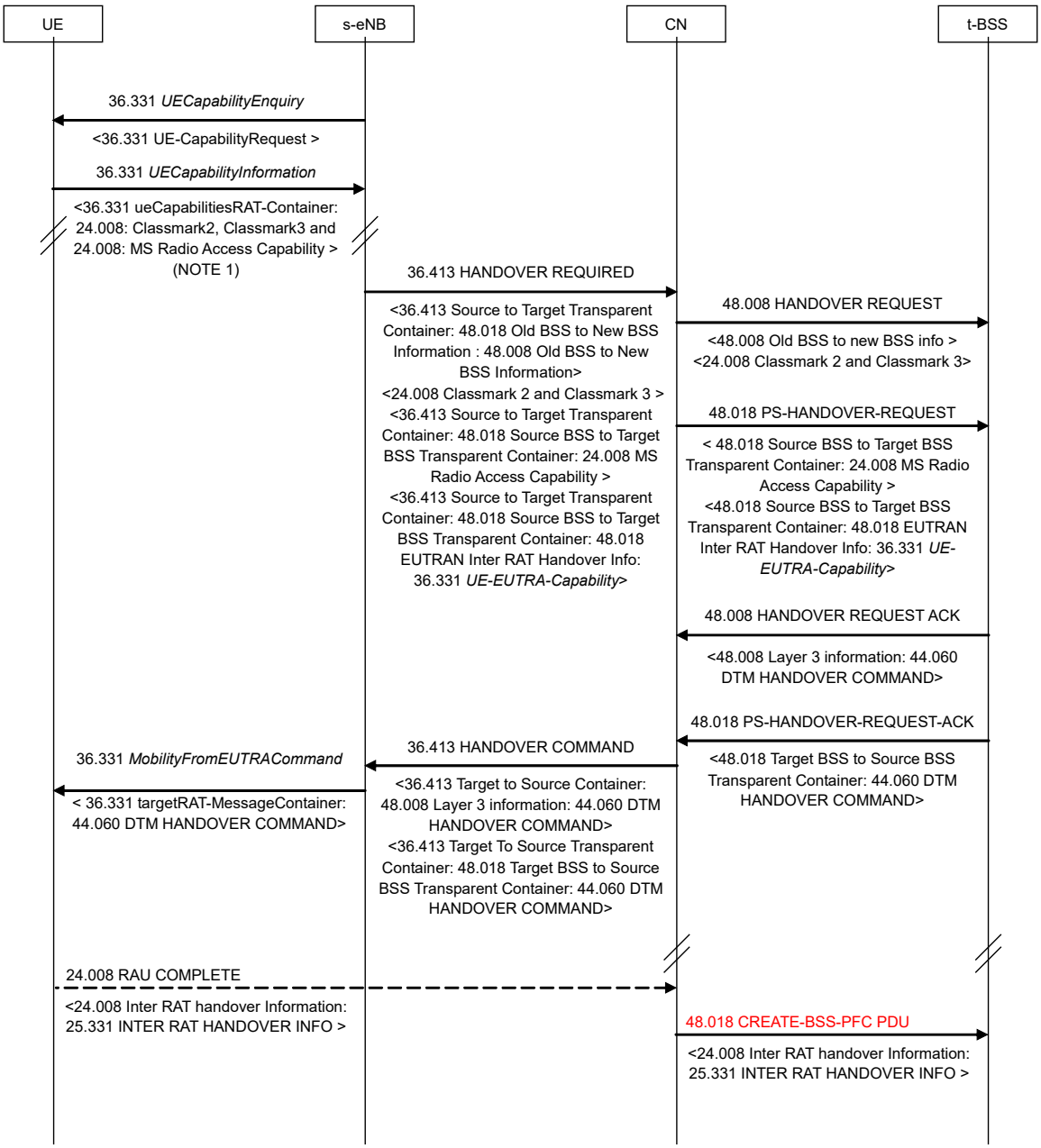


NOTE 1: the GERAN capabilities can be stored by the MME at an earlier opportunity, as shown in Figure 18-1, and transferred to the eNB at connection setup.
NOTE 2: the 36.413 HANDOVER COMMAND includes two identical copies of the 44.060 DTM HANDOVER COMMAND message i.e. the eNB

**Figure 19.2.2.5.6-5: Handover of CS and PS domain services from EUTRAN to GERAN A/Gb mode, normal flow**

Figure 19.2.2.5.6-6 and Figure 19.2.2.5.6-7 illustrate the message sequence for the handover from EUTRAN to UTRAN procedure:



Samsung Exhibit 1015, Page 140 of 198
Samsung Electronics Co., Ltd. v. Asus Technology Licensing Inc.
IPR2024-01217

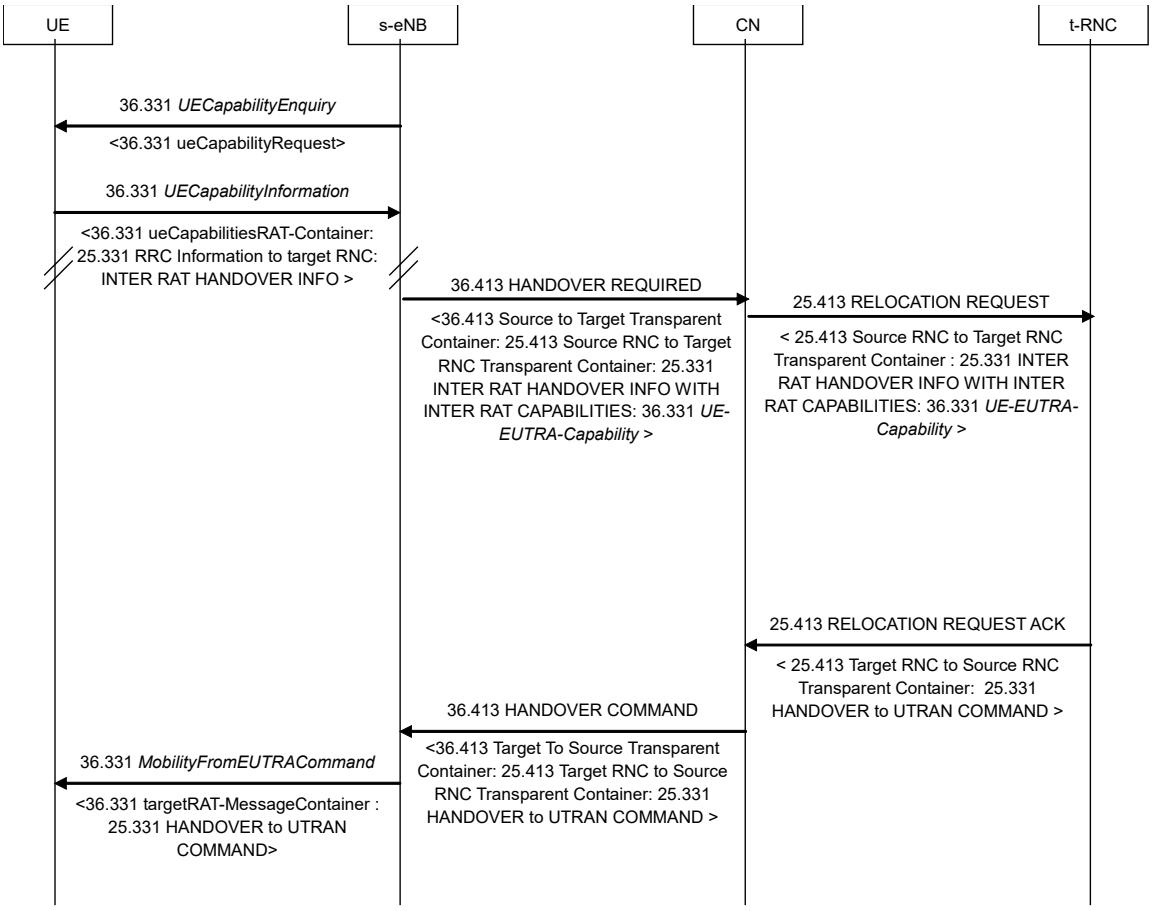


**Figure 19.2.2.5.6-6. Handover of PS or CS domain service from EUTRAN to UTRAN, normal flow**



Samsung Exhibit 1015, Page 141 of 198
Samsung Electronics Co., Ltd. v. Asus Technology Licensing Inc.
IPR2024-01217

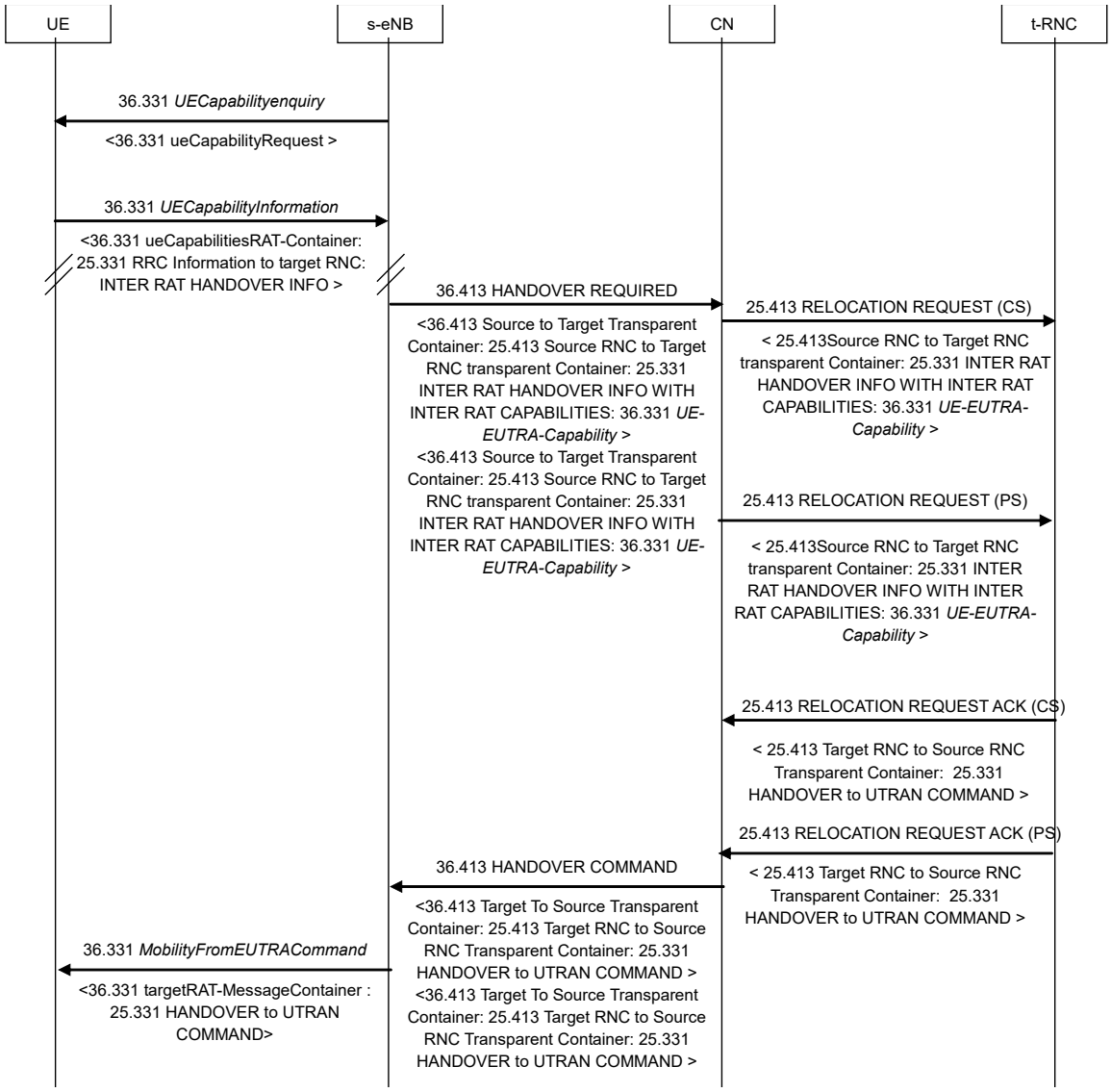


**Figure 19.2.2.5.6-7. Handover of PS and CS domain service from EUTRAN to UTRAN, normal flow**

### 19.2.2.5.7 eNB Status Transfer procedure

The purpose of the eNB Status Transfer procedure is to transfer the uplink PDCP SN and HFN receiver status and the downlink PDCP SN and HFN transmitter status from the eNB to the MME during an S1 handover for each respective E-RAB for which PDCP SN and HFN status preservation applies.



Samsung Exhibit 1015, Page 142 of 198
Samsung Electronics Co., Ltd. v. Asus Technology Licensing Inc.
IPR2024-01217

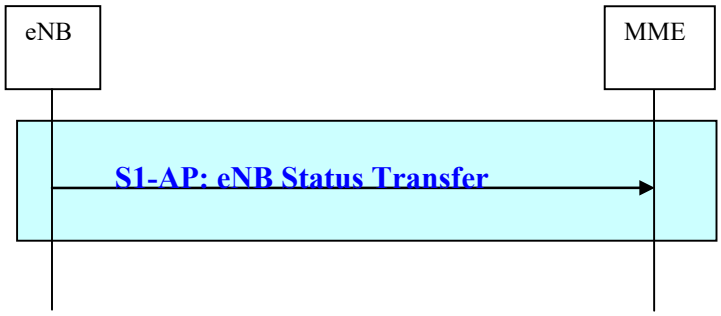


**Figure 19.2.2.5.7-1: eNB Status Transfer**

### 19.2.2.5.8 MME Status Transfer procedure

The purpose of the MME Status Transfer procedure is to transfer the uplink PDCP SN and HFN receiver status and the downlink PDCP SN and HFN transmitter status from the MME to the eNB during an S1 handover for each respective E-RAB for which PDCP SN and HFN status preservation applies.

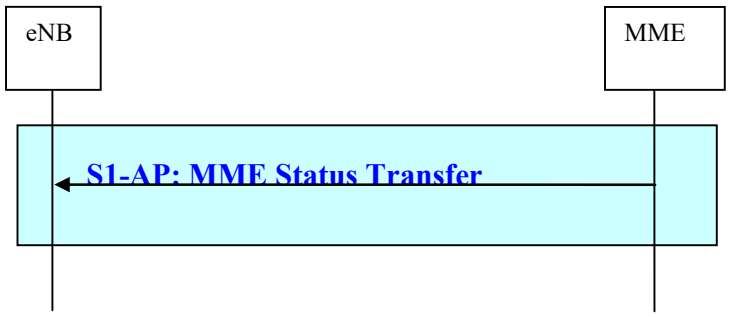


**Figure 19.2.2.5.8-1: MME Status Transfer**

## 19.2.2.6 NAS transport procedures

A NAS signalling message is transferred on the S1 interface in both directions. The procedures providing this functionality are

- Initial UE Message procedure (eNB initiated)
- Uplink NAS transport procedure (eNB initiated)
- Downlink NAS transport procedure (MME initiated)
- Downlink NAS non delivery indication procedure

i) Initial UE Message procedure



Samsung Exhibit 1015, Page 143 of 198
Samsung Electronics Co., Ltd. v. Asus Technology Licensing Inc.
IPR2024-01217

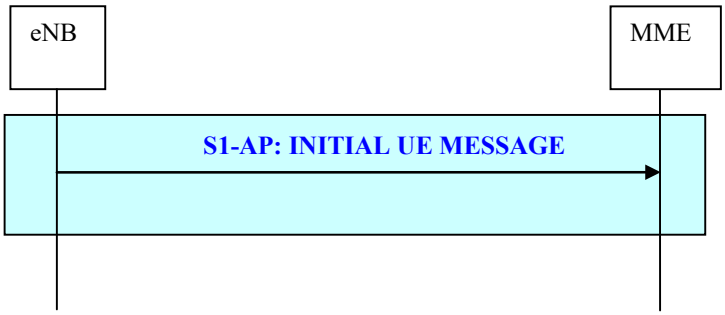


**Figure 19.2.2.6-1: Initial UE Message procedure**

- The INITIAL UE MESSAGE procedure is initiated by the eNB by sending the INITIAL UE MESSAGE message to the MME. The INITIAL UE MESSAGE contains a NAS message (e.g. Service Request), the UE signalling reference ID and other S1 addressing information. If the eNB is a HeNB supporting LIPA, the message may also include the HeNB collocated L-GW IP address to enable the establishment of a LIPA PDN connection. In case of UE access to a CSG cell the INITIAL UE MESSAGE contains the CSG id of the cell. In case of UE access to a hybrid cell the INITIAL UE MESSAGE contains the CSG id and Access Mode of the cell.

ii) NAS Transport procedure (eNB initiated).

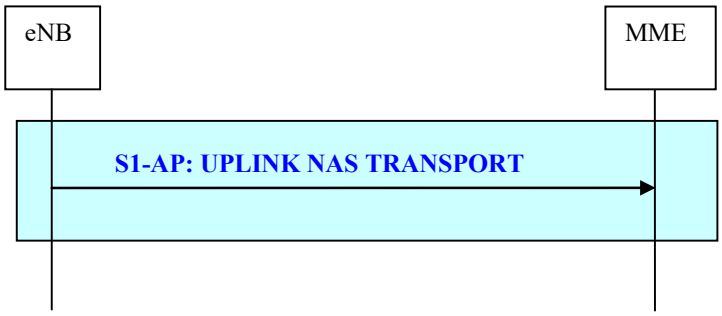


**Figure 19.2.2.6-2: Uplink NAS Transport procedure**

- The Uplink NAS Transport procedure is initiated by the eNB by sending the UPLINK NAS TRANSPORT message to the MME. The UPLINK NAS TRANSPORT message contains a NAS message, UE identification and other S1 related addressing information. If the eNB is a HeNB supporting LIPA, the message may also include the HeNB collocated L-GW IP address to enable the establishment of a LIPA PDN connection.

iii) NAS Transport procedure (MME initiated)

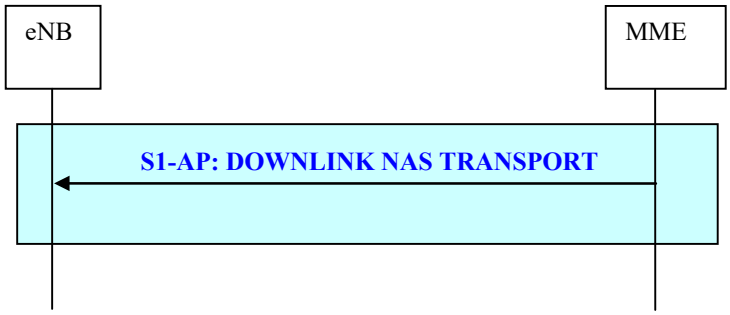


**Figure 19.2.2.6-3: Downlink NAS Transport procedure**



Samsung Exhibit 1015, Page 144 of 198
Samsung Electronics Co., Ltd. v. Asus Technology Licensing Inc.
IPR2024-01217

- The Downlink NAS Transport procedure is initiated by the MME by sending the DOWNLINK NAS TRANSPORT message to the eNB. The DOWNLINK NAS TRANSPORT contains a NAS message, UE identification and other S1 related addressing information.

iv) Downlink NAS non delivery procedure

Error! Objects cannot be created from editing field codes.

**Figure 19.2.2.6-4: Downlink NAS Non Delivery Indication procedure**

- When the eNB decides to not start the delivery of a NAS message that has been received from MME, it shall report the non-delivery of this NAS message by sending a DOWNLINK NAS NON DELIVERY INDICATION message to the MME including the non-delivered NAS message and an appropriate cause value.

## 19.2.2.7 S1 interface Management procedures

### 19.2.2.7.1 Reset procedure

The purpose of the Reset procedure is to initialize the peer entity after node setup and after a failure event occurred. This procedure is initiated by both the eNB and MME.

#### 19.2.2.7.1a eNB initiated Reset procedure

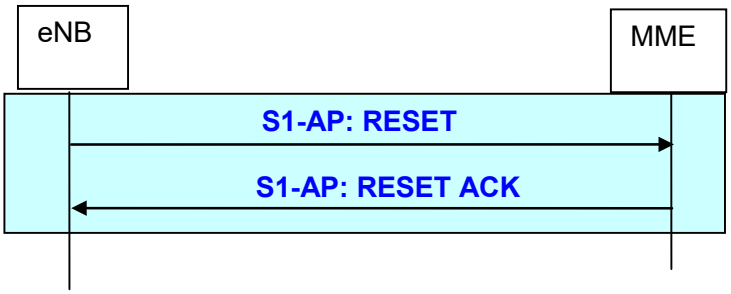


**Figure 19.2.2.7.1a-1: eNB initiated Reset procedure**

- The eNB triggers the RESET message to indicate that an initialisation in the MME is required. The MME releases the corresponding references and resources.
- Afterwards the MME sends the RESET ACK message to confirm that the resources and references are cleared.

#### 19.2.2.7.1b MME initiated Reset procedure

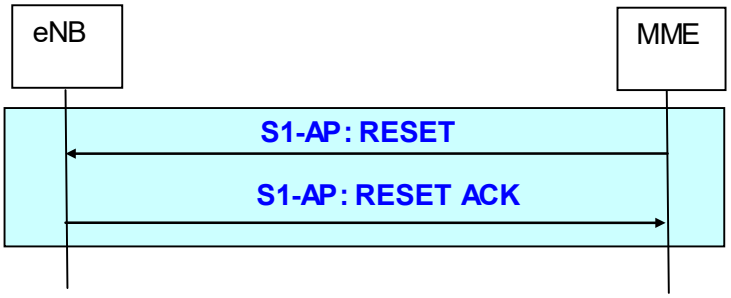


**Figure 19.2.2.7.1b-1: MME initiated Reset procedure**



Samsung Exhibit 1015, Page 145 of 198
Samsung Electronics Co., Ltd. v. Asus Technology Licensing Inc.
IPR2024-01217

- The MME triggers the RESET message to indicate that an initialisation in the eNB is required. The eNB releases the corresponding references and resources.
- Afterwards the eNB sends the RESET ACK message to confirm that the resources and references are cleared.

#### 19.2.2.7.2 Error Indication functions and procedures

The Error Indication procedure is initiated by the eNB and the MME, to report detected errors in one incoming message, if an appropriate failure message cannot be reported to the sending entity.

##### 19.2.2.7.2a eNB initiated error indication

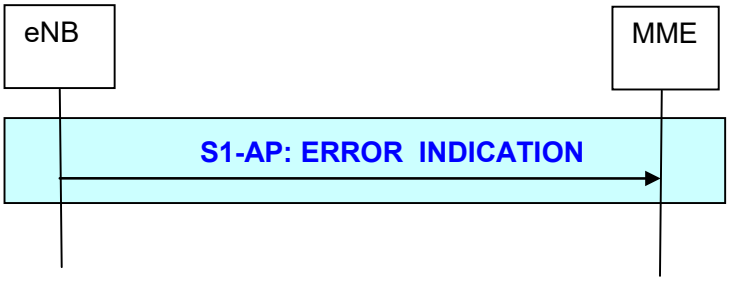


**Figure 19.2.2.7.2a-1: eNB initiated Error Indication procedure**

- The eNB sends the ERROR INDICATION message to report the peer entity which kind of error occurs.

##### 19.2.2.7.2b MME initiated error indication

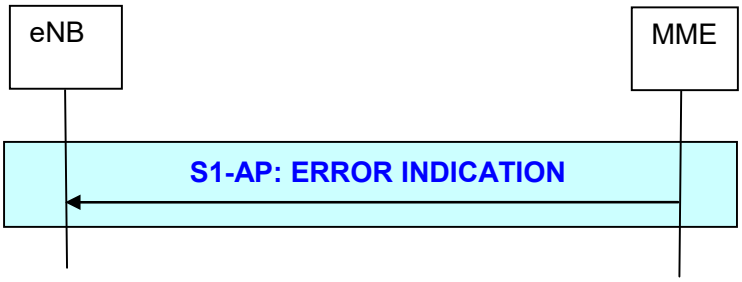


**Figure 19.2.2.7.2b-1: MME initiated Error Indication procedure**

- The MME sends the ERROR INDICATION message to report the peer entity which kind of error occurs.

### 19.2.2.8 S1 Setup procedure

The S1 Setup procedure is used to exchange configured data which is required in the MME and in the eNB respectively to ensure a proper interoperation. The S1 Setup procedure is triggered by the eNB. The S1 Setup procedure is the first S1AP procedure which will be executed.



Samsung Exhibit 1015, Page 146 of 198
Samsung Electronics Co., Ltd. v. Asus Technology Licensing Inc.
IPR2024-01217

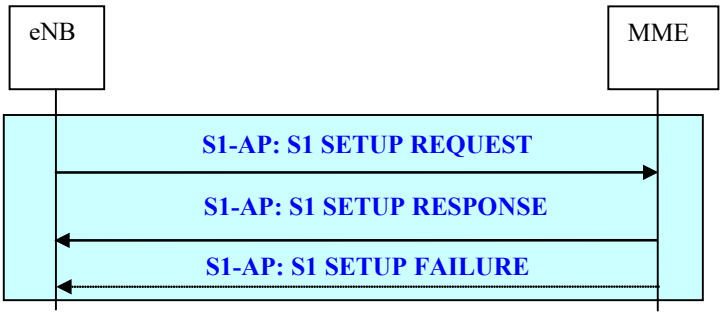


**Figure 19.2.2.8-1: S1 Setup procedure**

- The eNB initiates the S1 Setup procedure by sending the S1 SETUP REQUEST message including supported TAs and broadcasted PLMNs to the MME.
- In the successful case the MME responds with the S1 SETUP RESPONSE message which includes served PLMNs as well as a relative MME capacity indicator to achieve load balanced MMEs in the pool area.
- If the MME cannot accept the S1 Setup Request the MME responds with the S1 SETUP FAILURE message indicating the reason of the denial. The MME optionally indicates in the S1 SETUP FAILURE message when the eNB is allowed to re-initiate the S1 Setup Request procedure towards the same MME again.

### 19.2.2.9 eNB Configuration Update procedure

The eNB Configuration Update procedure is used to provide updated configured data in eNB. The eNB Configuration Update procedure is triggered by the eNB.

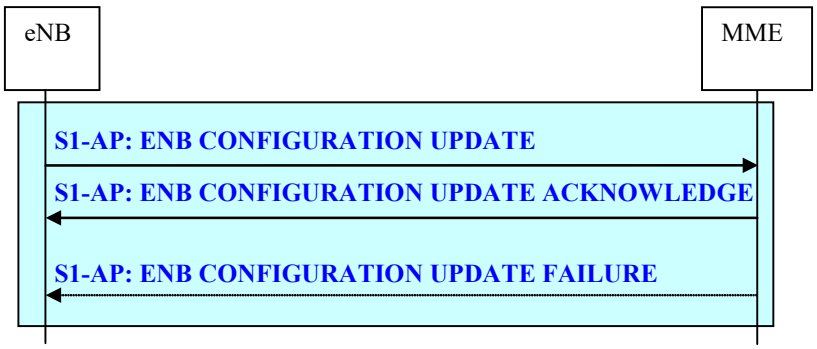


**Figure 19.2.2.9-1: eNB Configuration Update procedure**

- The eNB initiates the eNB Configuration Update procedure by sending the ENB CONFIGURATION UPDATE message including updated configured data like supported TAs and broadcasted PLMNs to the MME. In case one or more supported TA(s) needs to be updated, the eNB shall provide the whole list of TA(s), including those which has not been changed, in the ENB CONFIGURATION UPDATE message.
- The MME responds with the ENB CONFIGURATION UPDATE ACKNOWLEDGE message to acknowledge that the provided configuration data are successfully updated.
- The MME shall overwrite and store the received configuration data which are included in the ENB CONFIGURATION UPDATE message. Configuration data which has not been included in the ENB CONFIGURATION UPDATE message are interpreted by the MME as still valid. For the provided TA(s) the MME shall overwrite the whole list of supported TA(s).
- In case the MME cannot accept the received configuration updates the MME shall respond with the ENB CONFIGURATION UPDATE FAILURE message including an appropriate cause value to indicate the reason of the denial. The MME optionally indicates in the ENB CONFIGURATION UPDATE FAILURE message when



Samsung Exhibit 1015, Page 147 of 198
Samsung Electronics Co., Ltd. v. Asus Technology Licensing Inc.
IPR2024-01217

the eNB is allowed to re-initiate the eNB Configuration Update procedure towards the same MME again. For the unsuccessful update case the eNB and the MME shall continue with the existing configuration data.

### 19.2.2.9a eNB Configuration Transfer procedure

The eNB Configuration Transfer procedure is initiated by the eNB to request and/or transfer RAN configuration information via the core network.

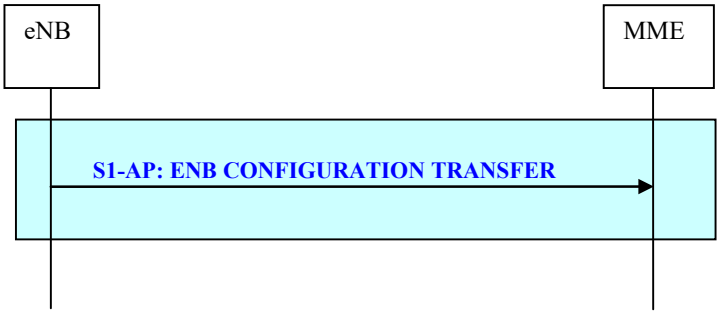


**Figure 19.2.2.9a-1: eNB Configuration Transfer procedure**

- The eNB Configuration Transfer procedure is initiated by the eNB by sending the eNB CONFIGURATION TRANSFER message to the MME. The eNB CONFIGURATION TRANSFER message contains RAN configuration information (e.g. SON information) and other relevant information such as the routing address which identifies the final RAN destination node.

### 19.2.2.10 MME Configuration Update procedure

The MME Configuration Update procedure is used to provide updated configured data and changes of the relative MME capacity values in the MME. The MME Configuration Update procedure is triggered by the MME.

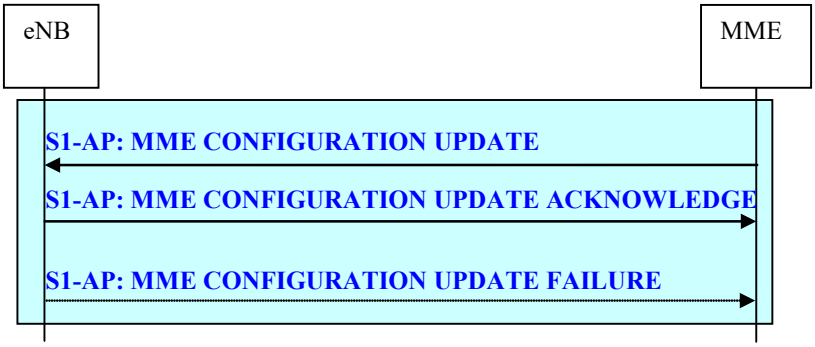


**Figure 19.2.2.10-1: MME Configuration Update procedure**

- The MME initiates the MME Configuration Update procedure by sending the MME CONFIGURATION UPDATE message including updated configured data like served PLMNs and changes of the relative MME capacity values to the eNB.
- The eNB responds with the MME CONFIGURATION UPDATE ACKNOWLEDGE message to acknowledge that the provided configuration data and the relative MME capacity values are successfully updated.
- The eNB shall overwrite and store the received configuration data and relative MME capacity values which are included in the MME CONFIGURATION UPDATE message. Configuration data which has not been included in the MME CONFIGURATION UPDATE message are interpreted by the eNB as still valid.



Samsung Exhibit 1015, Page 148 of 198
Samsung Electronics Co., Ltd. v. Asus Technology Licensing Inc.
IPR2024-01217

- In case the eNB cannot accept the received configuration updates the eNB shall respond with the MME CONFIGURATION UPDATE FAILURE message including an appropriate cause value to indicate the reason of the denial. The eNB optionally indicates in the MME CONFIGURATION UPDATE FAILURE message when the MME is allowed to re-initiate the MME Configuration Update procedure towards the same eNB again. For the unsuccessful update case the eNB and the MME shall continue with the existing configuration data and relative MME capacity values.

### 19.2.2.10a MME Configuration Transfer procedure

The MME Configuration Transfer procedure is initiated by the MME to request and/or transfer RAN configuration information to the eNB.

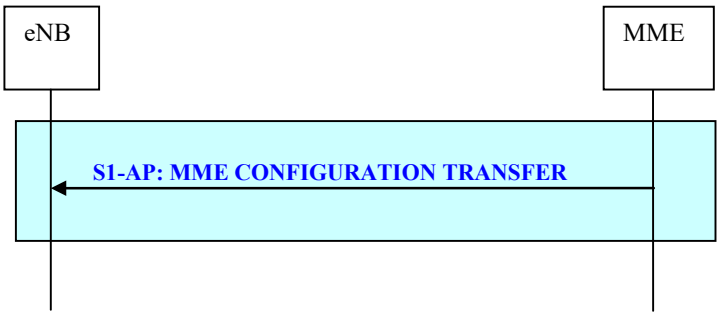


**Figure 19.2.2.10a-1: MME Configuration Transfer procedure**

- The MME Configuration Transfer procedure is initiated by the MME by sending the MME CONFIGURATION TRANSFER message to the eNB. The MME CONFIGURATION TRANSFER message contains RAN configuration information (e.g. SON information) and other relevant information.

### 19.2.2.11 Location Reporting procedures

The Location Reporting procedures provide the means to report the current location of a specific UE.

The procedures providing this function are:

- Location Reporting Control procedure
- Location Report procedure
- Location Report Failure Indication procedure

#### 19.2.2.11.1 Location Reporting Control procedure

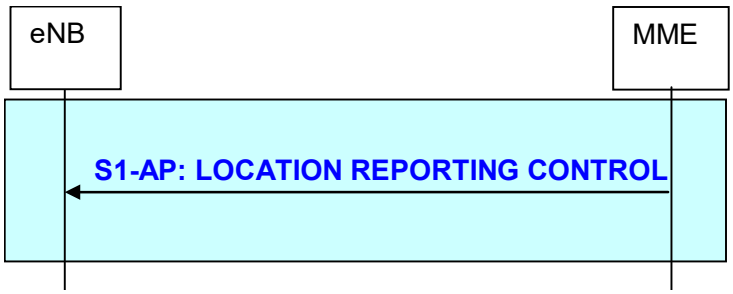


**Figure 19.2.2.11.1-1: Location Reporting Control procedure**

The Location Reporting Control procedure is initiated by the MME sending the LOCATION REPORTING CONTROL to the eNB to request the current location information, e.g. Cell ID, of a specific UE, and how the information shall be



Samsung Exhibit 1015, Page 149 of 198
Samsung Electronics Co., Ltd. v. Asus Technology Licensing Inc.
IPR2024-01217

reported, e.g. direct report, report every cell change. The Location Reporting Control procedure is also used to terminate reporting on cell change.

If the Location Reporting Control procedure fails, e.g. due to an interaction with an initiated handover then the eNB shall indicate the failure using the Location Report Failure Indication procedure.

If the Location Reporting Control procedure is on going for a specific UE and the eNB received an UE CONTEXT RELEASE COMMAND message from MME this specific UE then the eNB shall terminate the on-going Location Reporting.

#### 19.2.2.11.2 Location Report procedure

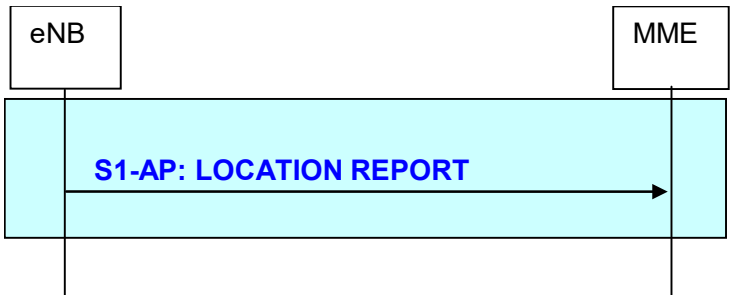


**Figure 19.2.2.11.2-1: Location Report procedure**

The Location Report procedure is initiated by the eNB by sending the LOCATION REPORT to the MME to report the current location information of a specific UE as a standalone report, or every time UE changes cell.

#### 19.2.2.11.3 Location Report Failure Indication procedure

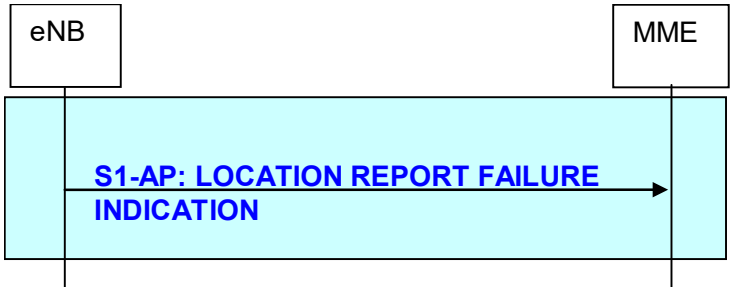


**Figure 19.2.2.11.3-1: Location Report Failure Indication procedure**

The Location Report Failure Indication procedure is initiated by the eNB by sending the LOCATION REPORT FAILURE INDICATION to the MME to indicate that the Location Report Control procedure has failed due to e.g. UE has performed inter-eNB handover.

### 19.2.2.12 Overload procedure

#### 19.2.2.12.1 Overload Start procedure

The Overload Start procedure is used by the MME to indicate to a proportion of eNBs to which the MME has an S1 interface connection that the MME is overloaded. The Overload Start procedure is used to provide an indication of which type of RRC connections needs to be rejected/permitted only.



Samsung Exhibit 1015, Page 150 of 198
Samsung Electronics Co., Ltd. v. Asus Technology Licensing Inc.
IPR2024-01217

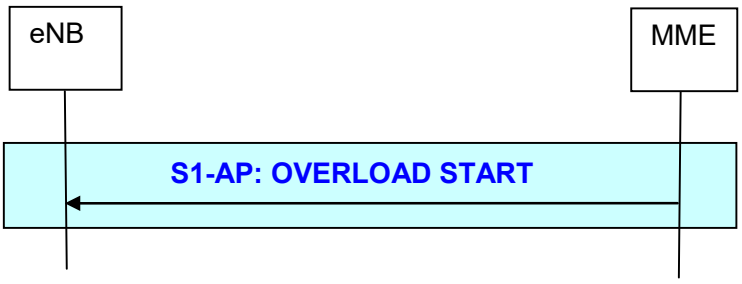


**Figure 19.2.2.12.1-1 Overload Start procedure**

If the Overload Start message is received whereas there is already an ongoing overload action, the eNB shall replace the ongoing overload action with the newly requested one.

#### 19.2.2.12.2 Overload Stop procedure

The Overload Stop procedure is used by the MME to indicate the concerned eNB(s) that the MME is no longer overloaded.

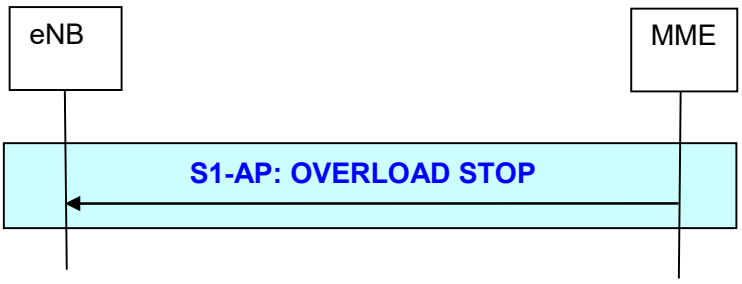


**Figure 19.2.2.12.2-1: Overload Stop procedure**

### 19.2.2.13 Write-Replace Warning procedure

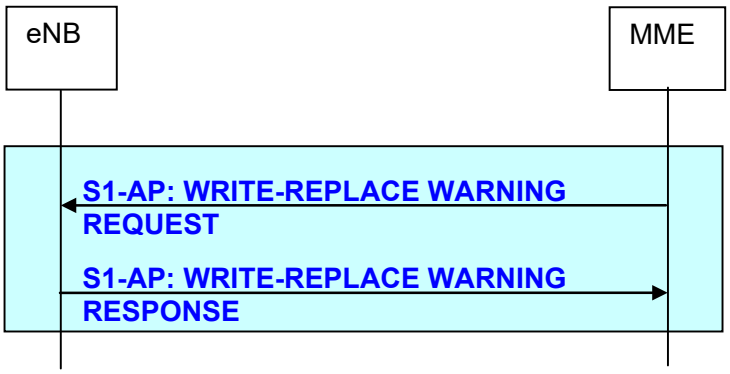


**Figure 19.2.2.13.1-1: Write-Replace Warning procedure**

The Write-Replace Warning procedure is used to start the broadcasting of a PWS warning message.

ETWS is an example of PWS warning system using this procedure where one message at a time can be delivered over the radio.

CMAS is another example of PWS warning system using this procedure which allows the broadcast of multiple concurrent warning messages over the radio.

The procedure is initiated by the MME by sending WRITE-REPLACE WARNING REQUEST message containing at least the Message Identifier, Warning Area list, information on how the broadcast should be performed, and the contents of the warning message to be broadcast.



Samsung Exhibit 1015, Page 151 of 198
Samsung Electronics Co., Ltd. v. Asus Technology Licensing Inc.
IPR2024-01217

The eNB responds with WRITE-REPLACE WARNING RESPONSE message to acknowledge that the requested PWS warning message broadcast was initiated.

ETWS and CMAS are independent services and ETWS and CMAS messages are differentiated over S1 in order to allow different handling.

In the case of ETWS, the Write-Replace Warning procedure can also be used to overwrite the ongoing broadcasting of an ETWS warning message.

### 19.2.2.14 eNB Direct Information Transfer procedure

The eNB Direct Information Transfer procedure is initiated by the eNB to request and transfer information to the core network.

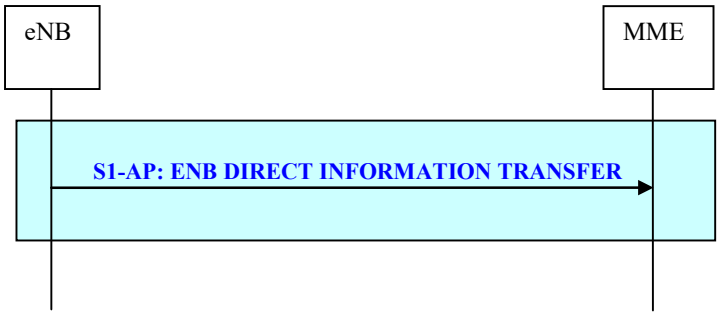


**Figure 19.2.2.14-1: eNB Direct Information Transfer procedure**

- The eNB Direct Information Transfer procedure is initiated by the eNB by sending the eNB DIRECT INFORMATION TRANSFER message to the MME. The eNB DIRECT INFORMATION TRANSFER message contains RIM information and RIM routing address which identifies the final RAN destination node.

### 19.2.2.15 MME Direct Information Transfer procedure

The MME Direct Information Transfer procedure is initiated by the MME to request and transfer information to the core network.

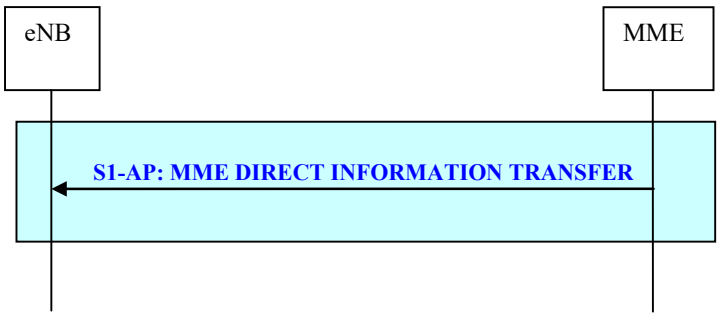


**Figure 19.2.2.15-1: MME Direct Information Transfer procedure**

- The MME Direct Information Transfer procedure is initiated by the MME by sending the MME DIRECT INFORMATION TRANSFER message to the eNB. The MME DIRECT INFORMATION TRANSFER message contains RIM information.



Samsung Exhibit 1015, Page 152 of 198
Samsung Electronics Co., Ltd. v. Asus Technology Licensing Inc.
IPR2024-01217

### 19.2.2.16 S1 CDMA2000 Tunnelling procedures

The S1 CDMA2000 Tunnelling procedures carry CDMA2000 signalling messages between UE and CDMA2000 RAT over the S1 Interface. This includes signalling for pre-registration and handover preparation for optimized mobility from E-UTRAN to CDMA2000 HRPD, signalling for handover preparation for mobility from E-UTRAN to CDMA2000 1xRTT and signalling to support CS fallback to CDMA2000 1xRTT for mobile originated and mobile terminated CS domain services. The CDMA2000 messages are tunnelled transparently to the eNB and MME, however, additional information may be sent along with the tunnelled CDMA2000 message to assist the eNodeB and MME in the Tunnelling procedure. The procedures providing this functionality are:

- Downlink S1 CDMA2000 Tunnelling procedure;
- Uplink S1 CDMA2000 Tunnelling procedure.

#### 19.2.2.16.1 Downlink S1 CDMA2000 Tunnelling procedure

The MME sends the DOWNLINK S1 CDMA2000 TUNNELLING message to the eNB to forward a CDMA2000 message towards an UE for which a logical S1 connection exists (see Figure 19.2.2.16.1-1 below).

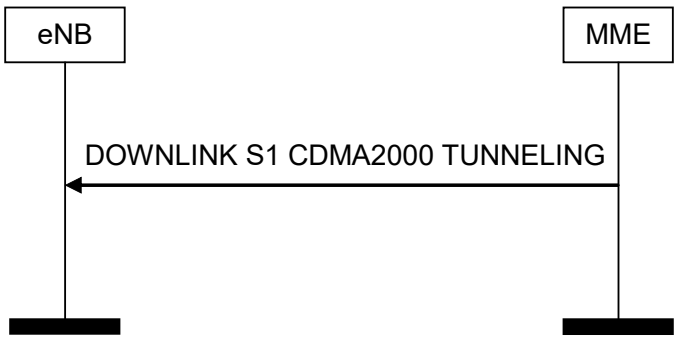


**Figure 19.2.2.16.1-1: Downlink S1 CDMA2000 Tunnelling procedure**

#### 19.2.2.16.2 Uplink S1 CDMA2000 Tunnelling procedure

The eNB sends the UPLINK S1 CDMA2000 TUNNELLING message to the MME to forward a CDMA2000 message towards the CDMA2000 RAT (HRPD or 1xRTT) as depicted on Figure 19.2.2.16.2-1 below.

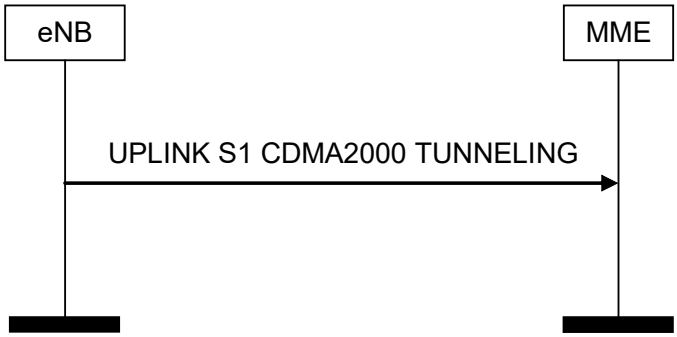


**Figure 19.2.2.16.2-1: Uplink S1 CDMA2000 Tunnelling procedure**



Samsung Exhibit 1015, Page 153 of 198
Samsung Electronics Co., Ltd. v. Asus Technology Licensing Inc.
IPR2024-01217

### 19.2.2.17 Kill procedure

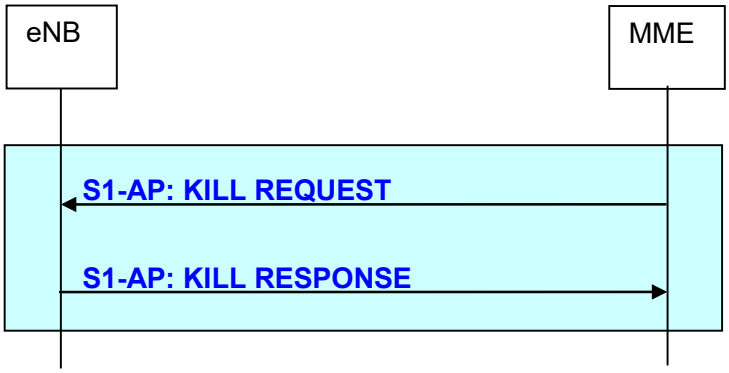


**Figure 19.2.2.17-1: Kill procedure**

The Kill procedure is used to stop the broadcasting a PWS warning message.

CMAS is an example of warning system using this procedure. The ETWS warning system doesn't use this procedure.

The procedure is initiated by the MME sending the KILL REQUEST message containing at least the Message Identifier and serial number of the message to be killed and the Warning Area List where it shall be killed.

The eNB responds with a KILL RESPONSE message to acknowledge that the requested PWS message broadcast delivery has actually been stopped.

### 19.2.2.18 LPPa Transport procedures

An LPPa signalling message is transferred on the S1 interface in both directions. The procedures providing this functionality are:

- Downlink UE Associated LPPa Transport procedure;
- Uplink UE Associated LPPa Transport procedure;
- Downlink Non UE Associated LPPa Transport procedure;
- Uplink Non UE Associated LPPa Transport procedure.

The UE-associated signalling is used to support E-CID positioning of a specific UE. The non-UE associated signalling is used to obtain assistance data from an eNodeB to support OTDOA positioning for any UE.

#### 19.2.2.18.1 Downlink UE Associated LPPa Transport procedure

The Downlink UE Associated LPPa Transport procedure is initiated by the MME by sending the DOWNLINK UE ASSOCIATED LPPA TRANSPORT message to the eNB. The DOWNLINK UE ASSOCIATED LPPA TRANSPORT contains an LPPa message.

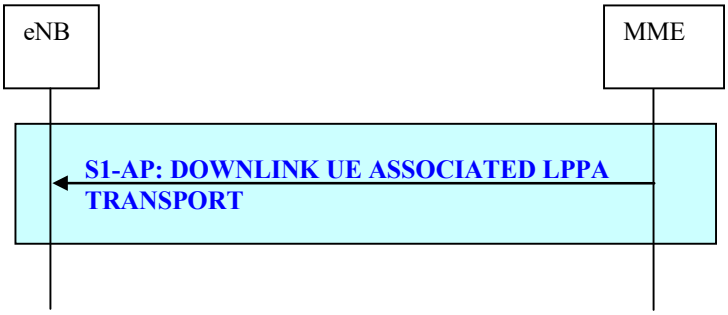


**Figure 19.2.2.18.1-1: Downlink UE Associated LPPa Transport procedure**



Samsung Exhibit 1015, Page 154 of 198
Samsung Electronics Co., Ltd. v. Asus Technology Licensing Inc.
IPR2024-01217

### 19.2.2.18.2 Uplink UE Associated LPPa Transport procedure

The Uplink UE Associated LPPa Transport procedure is initiated by the eNB by sending the UPLINK UE ASSOCIATED LPPA TRANSPORT message to the MME. The UPLINK UE ASSOCIATED LPPA TRANSPORT message contains a LPPa message.

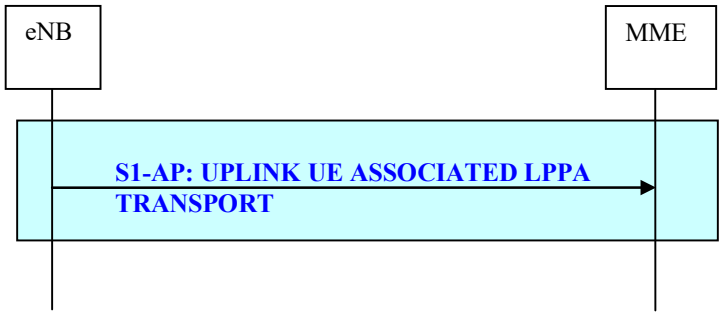


**Figure 19.2.2.18.2-1: Uplink UE Associated LPPa Transport procedure**

### 19.2.2.18.3 Downlink Non UE Associated LPPa Transport procedure

The Downlink Non UE Associated LPPa Transport procedure is initiated by the MME by sending the DOWNLINK NON UE ASSOCIATED LPPA TRANSPORT message to the eNB. The DOWNLINK NON UE ASSOCIATED LPPA TRANSPORT contains a LPPa message.

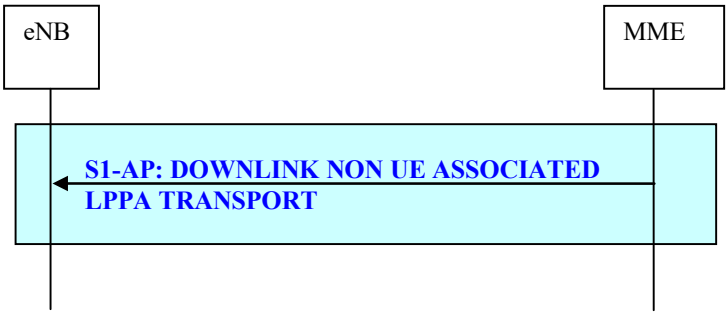


**Figure 19.2.2.18.3-1: Downlink Non UE Associated LPPa Transport procedure**

### 19.2.2.18.4 Uplink Non UE Associated LPPa Transport procedure

The Uplink Non UE Associated LPPa Transport procedure is initiated by the eNB by sending the UPLINK NON UE ASSOCIATED LPPA TRANSPORT message to the MME. The UPLINK NON UE ASSOCIATED LPPA TRANSPORT message contains an LPPa message.

**Figure 19.2.2.18.4-1: Uplink Non UE Associated LPPa Transport procedure**



Samsung Exhibit 1015, Page 155 of 198
Samsung Electronics Co., Ltd. v. Asus Technology Licensing Inc.
IPR2024-01217

### 19.2.2.19 Trace procedures

The Trace procedures provide the means to control trace sessions in the eNB for both signalling and management triggered trace sessions.

The procedures providing this function are:

- Trace Start procedure;
- Trace Failure Indication procedure;
- Deactivate Trace procedure;
- Cell Traffic Trace procedure.

#### 19.2.2.19.1 Trace Start procedure

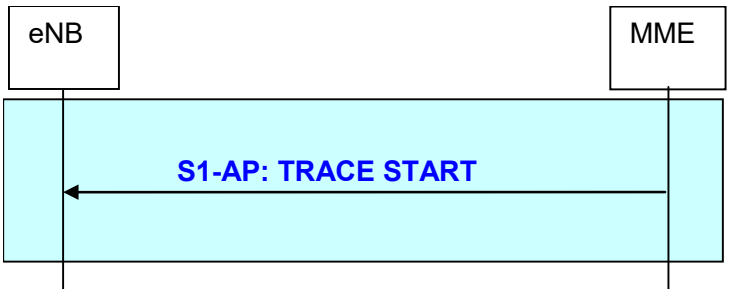


**Figure 19.2.2.19.1-1: Trace Start procedure**

The Trace Start procedure is initiated by the MME by sending the TRACE START message to the eNB in order to request the initiation of a trace session for a specific UE in ECM_CONNECTED mode.

#### 19.2.2.19.2 Trace Failure Indication procedure

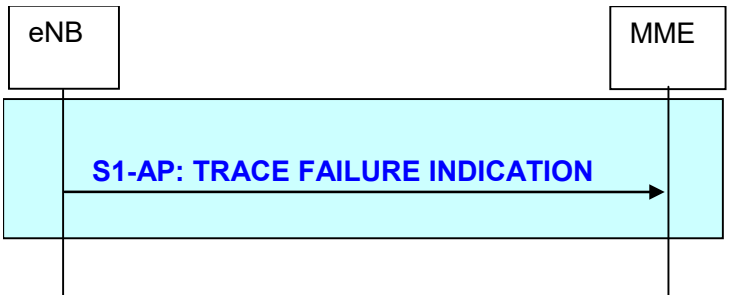


**Figure 19.2.2.19.2-1: Trace Failure Indication procedure**

The Trace Failure Indication procedure is initiated by the eNB by sending the TRACE FAILURE INDICATION message to the MME to report that a Trace Start procedure or a Deactivate Trace procedure has failed due to an interaction with a handover procedure.



Samsung Exhibit 1015, Page 156 of 198
Samsung Electronics Co., Ltd. v. Asus Technology Licensing Inc.
IPR2024-01217

#### 19.2.2.19.3 Deactivate Trace procedure

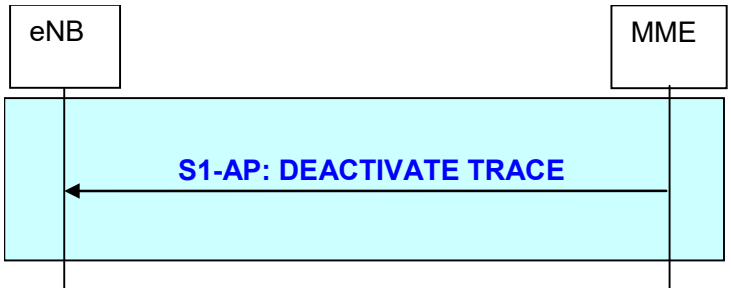


**Figure 19.2.2.19.3-1: Deactivate Trace procedure**

The Deactivate Trace procedure is initiated by the MME by sending the DEACTIVATE TRACE message to the eNB to request the termination of an ongoing trace session.

#### 19.2.2.19.4 Cell Traffic Trace procedure

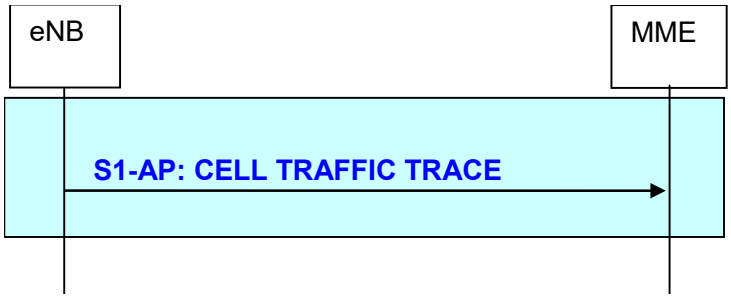


**Figure 19.2.2.19.4-1: Cell Traffic Trace procedure**

The Cell Traffic Trace procedure is initiated by the eNB by sending the CELL TRAFFIC TRACE message to the MME to report the allocated Trace Recording Session Reference and the Trace Reference to MME. This procedure is used to support management triggered trace sessions.

### 19.2.2.20 UE Capability Info Indication procedure

The purpose of the UE Capability Info Indication procedure is to enable the eNB to provide to the MME UE capability-related information.

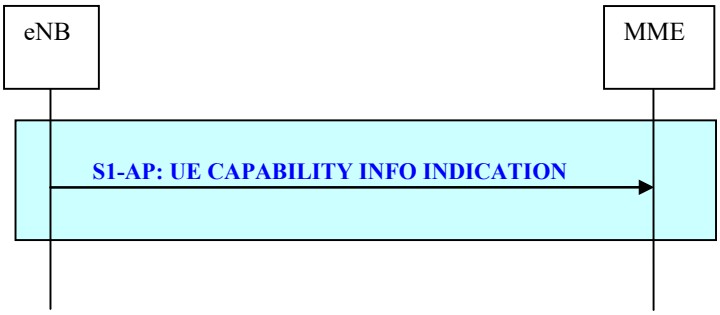


**Figure 19.2.2.20-1: UE Capability Info Indication procedure**



Samsung Exhibit 1015, Page 157 of 198
Samsung Electronics Co., Ltd. v. Asus Technology Licensing Inc.
IPR2024-01217

# 20 X2 Interface

## 20.1 User Plane

The X2 user plane interface (X2-U) is defined between eNBs. The X2-U interface provides non guaranteed delivery of user plane PDUs. The user plane protocol stack on the X2 interface is shown in Figure 20.1-1. The transport network layer is built on IP transport and GTP-U is used on top of UDP/IP to carry the user plane PDUs.

The X2-UP interface protocol stack is identical to the S1-UP protocol stack.

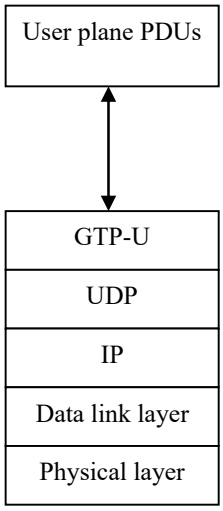


**Figure 20.1-1: X2 Interface User Plane (eNB-eNB)**

## 20.2 Control Plane

The X2 control plane interface (X2-CP) is defined between two neighbour eNBs. The control plane protocol stack of the X2 interface is shown on Figure 20.2-1 below. The transport network layer is built on SCTP on top of IP. The application layer signalling protocol is referred to as X2-AP (X2 Application Protocol).

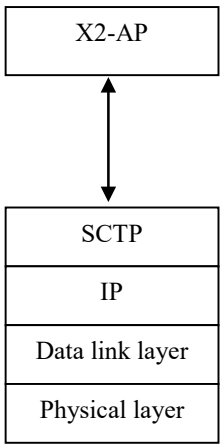


**Figure 20.2-1: X2 Interface Control Plane**

A single SCTP association per X2-C interface instance shall be used with one pair of stream identifiers for X2-C common procedures. Only a few pairs of stream identifiers should be used for X2-C dedicated procedures.



Samsung Exhibit 1015, Page 158 of 198
Samsung Electronics Co., Ltd. v. Asus Technology Licensing Inc.
IPR2024-01217

Source-eNB communication context identifiers that are assigned by the source-eNB for X2-C dedicated procedures, and target-eNB communication context identifiers that are assigned by the target-eNB for X2-C dedicated procedures, shall be used to distinguish UE specific X2-C signalling transport bearers. The communication context identifiers are conveyed in the respective X2AP messages.

RNs terminate X2-AP. In this case, there is one X2 interface relation between the RN and the DeNB.

## 20.2.1 X2-CP Functions

The X2AP protocol supports the following functions:

- Intra LTE-Access-System Mobility Support for UE in ECM-CONNECTED:
  - Context transfer from source eNB to target eNB;
  - Control of user plane tunnels between source eNB and target eNB;
  - Handover cancellation.
- Load Management;
- General X2 management and error handling functions:
  - Error indication;
  - Setting up the X2;
  - Resetting the X2;
  - Updating the X2 configuration data;
- Information exchange in support of handover settings negotiation.
- Energy Saving. This function allows decreasing energy consumption by enabling indication of cell activation/deactivation.

## 20.2.2 X2-CP Procedures

The elementary procedures supported by the X2AP protocol are listed in Table 8.1-1 and Table 8.1-2 of TS 36.423 [42].

### 20.2.2.1 Handover Preparation procedure

The Handover preparation procedure is initiated by the source eNB if it determines the necessity to initiate the handover via the X2 interface.

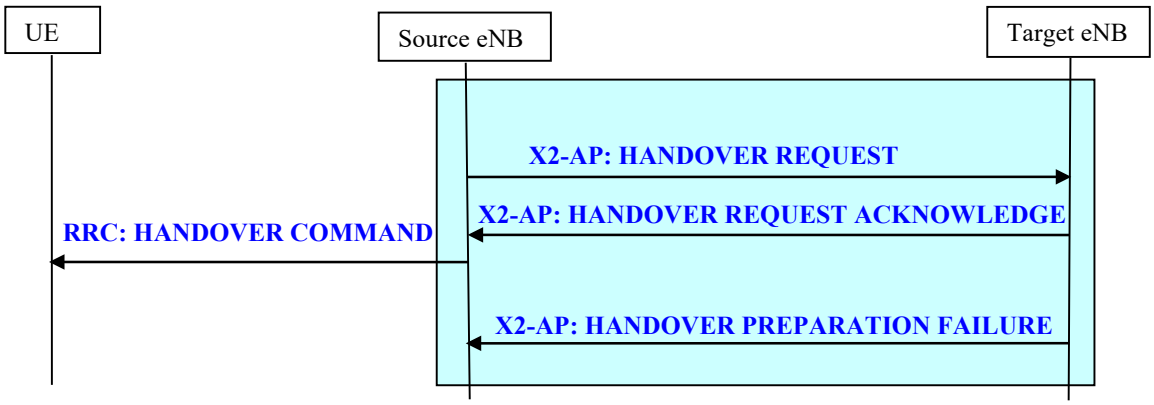


**Figure 20.2.2.1-1: Handover Preparation procedure**



Samsung Exhibit 1015, Page 159 of 198
Samsung Electronics Co., Ltd. v. Asus Technology Licensing Inc.
IPR2024-01217

The source eNB sends a HANDOVER REQUEST to the target eNB including the bearers to be setup by the target ENB.

The handover preparation phase is finished upon the reception of the HANDOVER REQUEST ACKNOWLEDGE message in the source eNB, which includes at least radio interface related information (HO Command for the UE), successfully established E-RAB(s) and failed established E-RAB(s).

In case the handover resource allocation is not successful (e.g. no resources are available on the target side) the target eNB responds with the HANDOVER PREPARATION FAILURE message instead of the HANDOVER REQUEST ACKNOWLEDGE message.

If eNB received NAS message from MME during X2 handover procedure, it shall be acted as specified in subclause 19.2.2.6.

### 20.2.2.2 Handover Cancel procedure

This functionality is located in the source eNB to allow cancellation of the handover procedure.

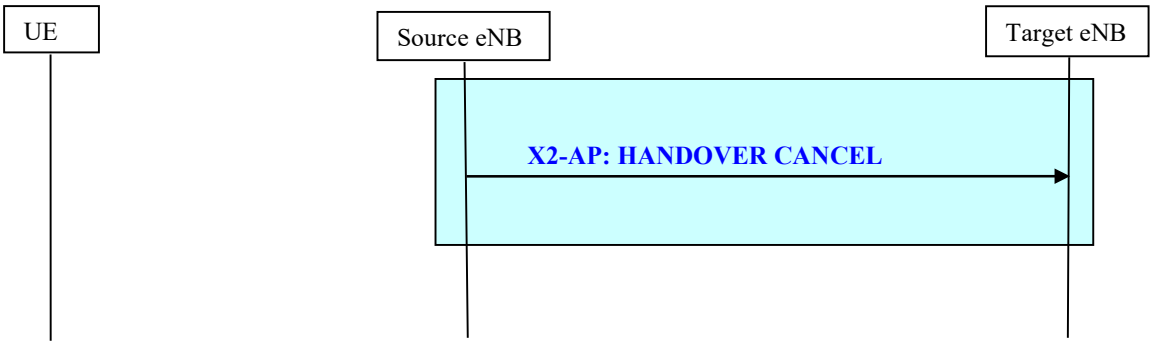


**Figure 20.2.2.2-1: Handover Cancel procedure**

The source eNB sends a HANDOVER CANCEL message to the target eNB indicating the reason for the handover cancellation.

### 20.2.2.3 UE Context Release procedure

The UE Context Release procedure is initiated by the target eNB to signal to the source eNB that resources for the handed over UE context can be released.

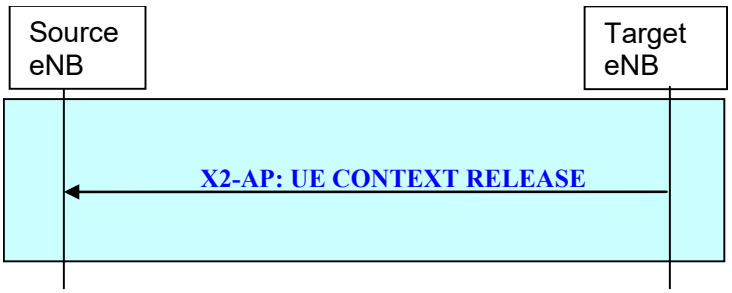


**Figure 20.2.2.3-1: UE Context Release procedure**



Samsung Exhibit 1015, Page 160 of 198
Samsung Electronics Co., Ltd. v. Asus Technology Licensing Inc.
IPR2024-01217

By sending UE CONTEXT RELEASE the target eNB informs the source eNB of Handover success and triggers the release of resources.

### 20.2.2.4 SN Status Transfer procedure

The purpose of the SN Status Transfer procedure is to transfer the uplink PDCP SN and HFN receiver status and the downlink PDCP SN and HFN transmitter status from the source to the target eNB during an X2 handover for each respective E-RAB for which PDCP SN and HFN status preservation applies.

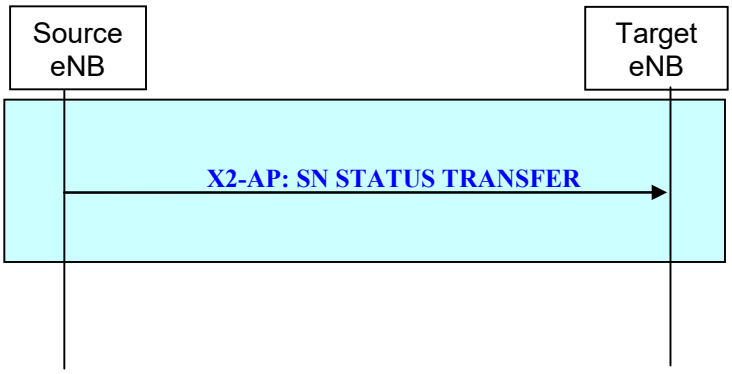


**Figure 20.2.2.4-1: SN Status Transfer procedure**

### 20.2.2.5 Error Indication procedure

The Error Indication procedure is initiated by an eNB to signal to a peer eNB an error situation in a received message, provided it cannot be reported by an appropriate failure message.

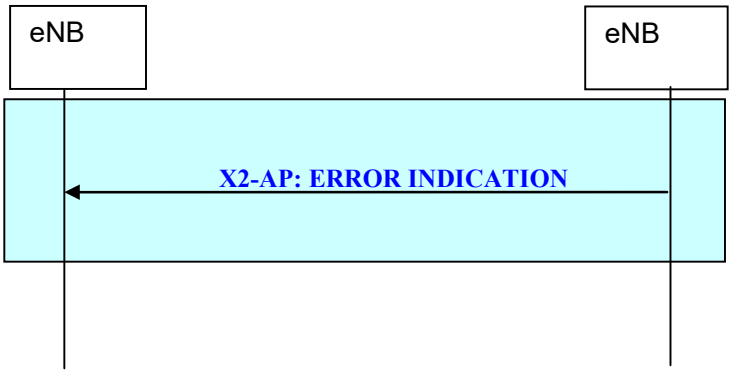


**Figure 20.2.2.5-1: Error Indication procedure**

### 20.2.2.6 Load Indication procedure

Inter-cell interference coordination in E-UTRAN is performed through the X2 interface. In case of variation in the interference conditions, the eNB signals the new condition to its neighbour eNBs e.g. the neighbour eNBs for which an X2 interface is configured due to mobility reasons.

When the time-domain inter-cell interference coordination is used to mitigate interferece, the eNB signals its almost blank subframe (ABS) patterns to its neighbor eNBs, so that the receiving eNB can utilize the ABS of the sending eNB with less interference.

NOTE: A typical use case of the time-domain solution of inter-cell interference coordination is the one where an eNB providing broader coverage and therefore being more capacity constrained determines its ABS patterns and indicates them to eNBs, providing smaller coverage residing in its area.



Samsung Exhibit 1015, Page 161 of 198
Samsung Electronics Co., Ltd. v. Asus Technology Licensing Inc.
IPR2024-01217

The Load Indication procedure is used to transfer interference co-ordination information between neighbouring eNBs managing intra-frequency cells.

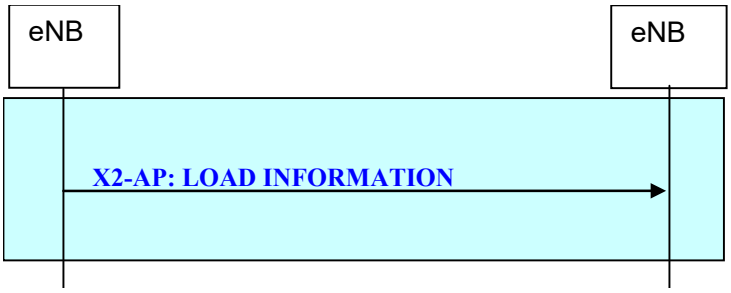


**Figure 20.2.2.6-1: Load Indication procedure**

### 20.2.2.7 X2 Setup procedure

The purpose of the X2 Setup procedure is to exchange application level data needed for two eNBs to interoperate correctly over the X2 interface.

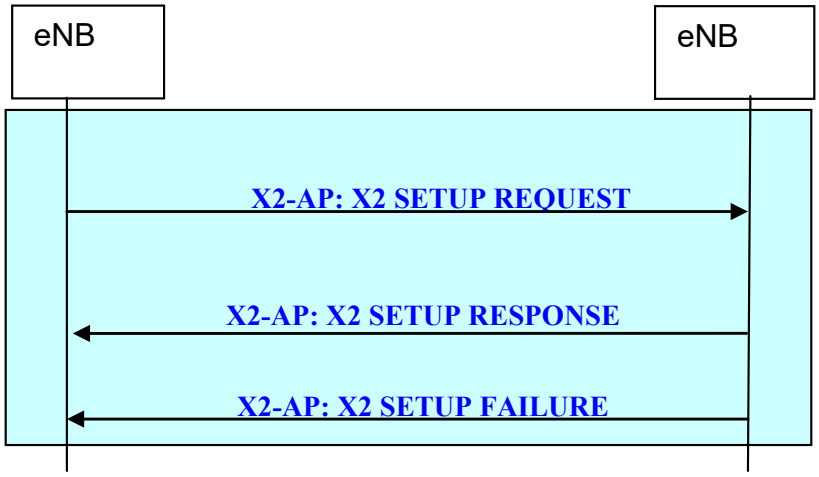


**Figure 20.2.2.7-1: X2 Setup procedure**

### 20.2.2.8 eNB Configuration Update procedure

The purpose of the eNB Configuration Update procedure is to update application level configuration data needed for two eNBs to interoperate correctly over the X2 interface.



Samsung Exhibit 1015, Page 162 of 198
Samsung Electronics Co., Ltd. v. Asus Technology Licensing Inc.
IPR2024-01217

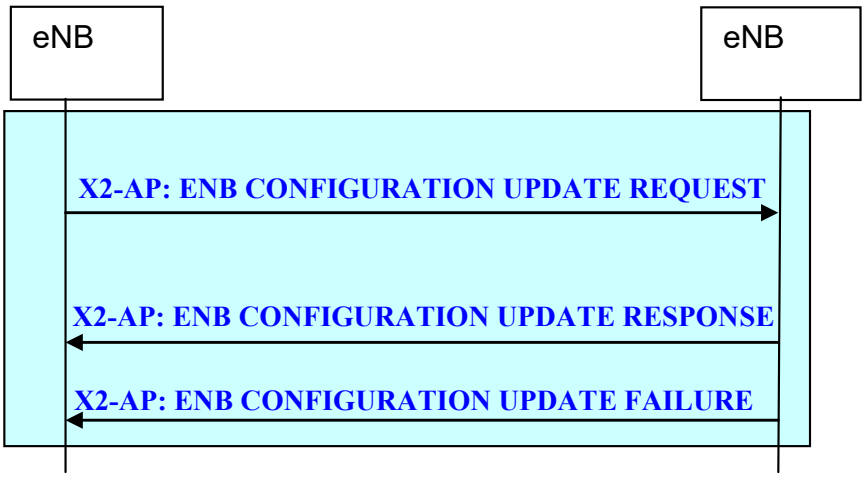


**Figure 20.2.2.8-1: eNB Configuration Update procedure**

### 20.2.2.9 Reset procedure

The Reset procedure is initiated by an eNB to align the resources with a peer eNB in the event of an abnormal failure. The procedure resets the whole X2 interface.

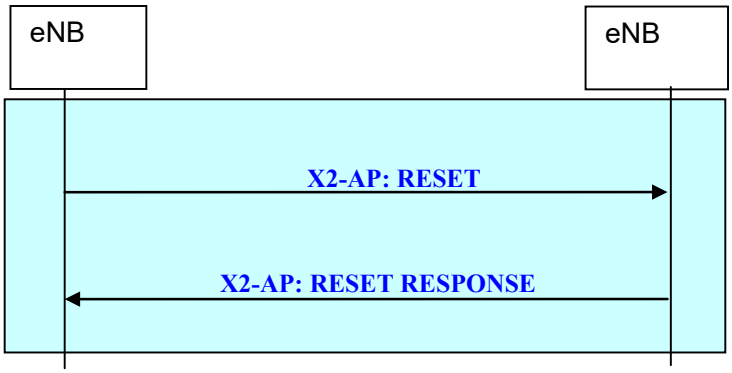


**Figure 20.2.2.9-1: Reset procedure**

### 20.2.2.10 Resource Status Reporting Initiation procedure

The Resource Status Reporting Initiation procedure is used by an eNB to request load measurements from another eNB.



Samsung Exhibit 1015, Page 163 of 198
Samsung Electronics Co., Ltd. v. Asus Technology Licensing Inc.
IPR2024-01217

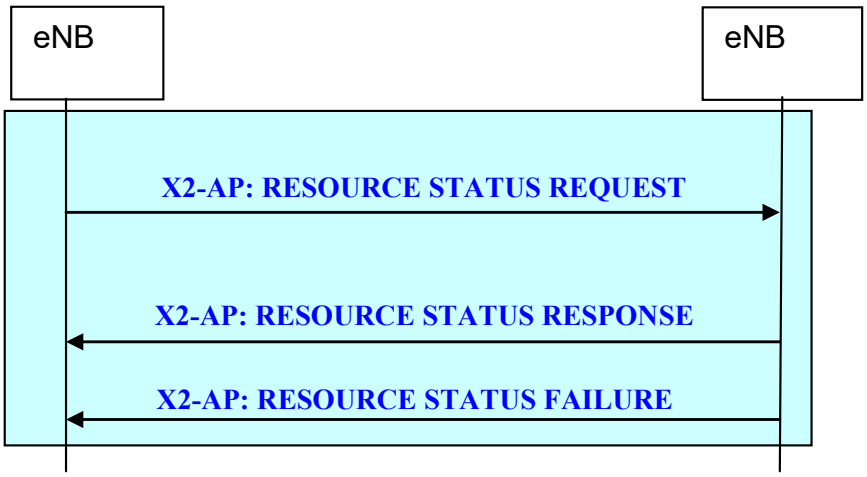


**Figure 20.2.2.10-1: Resource Status Reporting Initiation procedure**

### 20.2.2.11 Resource Status Reporting procedure

The Resource Status Reporting procedure reports measurement results requested by another eNB.

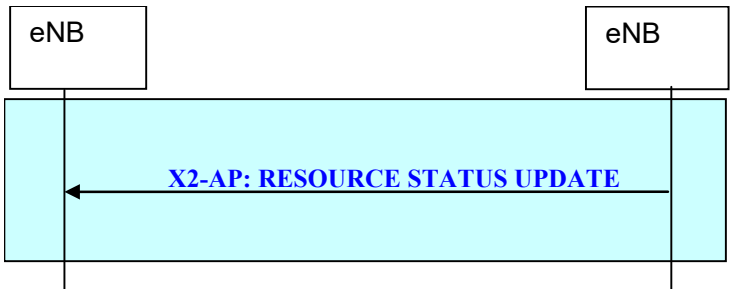


**Figure 20.2.2.11-1: Resource Status Reporting procedure**

### 20.2.2.12 Radio Link Failure Indication procedure

The purpose of the Radio Link Failure Indication procedure is to enable mobility robustness improvement in E-UTRAN by passing information connected to a re-establishment request over the X2 interface.

When a re-establishment event occurs, the eNB uses the PCI provided by the UE to identify the potentially previous serving cell/eNB. The eNB that received the re-establishment request then sends a RLF INDICATION message containing identification of the UE to the concerned eNB(s). The previously serving eNB may then match the correct context, and analyze the possible root cause of the radio link failure which preceded the re-establishment request.



Samsung Exhibit 1015, Page 164 of 198
Samsung Electronics Co., Ltd. v. Asus Technology Licensing Inc.
IPR2024-01217

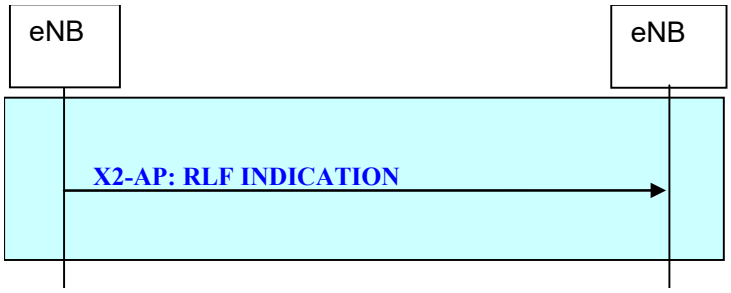


**Figure 20.2.2.12-1: Radio Link Failure Indication procedure**

### 20.2.2.13 Handover Report procedure

The purpose of the Handover Report procedure is to enable mobility robustness improvement in E-UTRAN by passing information connected to the analysis of an RLF which occurred shortly after a successful handover.

The eNB where the RLF occurred (original target eNB) sends a HANDOVER REPORT message to the original source eNB, identifying the source cell, the target cell, and the cell where re-establishment took place. The message also indicates the likely root cause of the mobility failure (e.g. Too Early Handover, Handover to Wrong Cell).

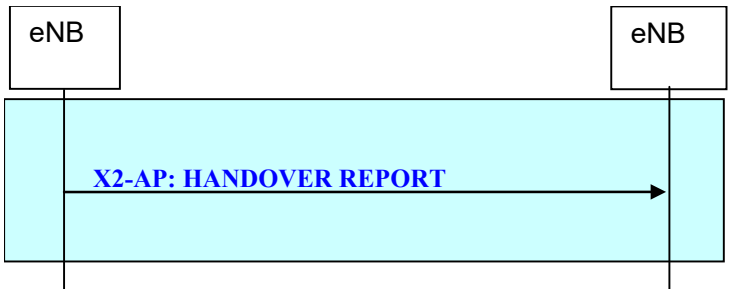


**Figure 20.2.2.13-1: Handover Report procedure**

### 20.2.2.14 Mobility Settings Change procedure

The purpose of the MOBILITY SETTINGS CHANGE procedure is to enable an eNB to send a MOBILITY CHANGE REQUEST message to a peer eNB to negotiate the handover trigger settings.

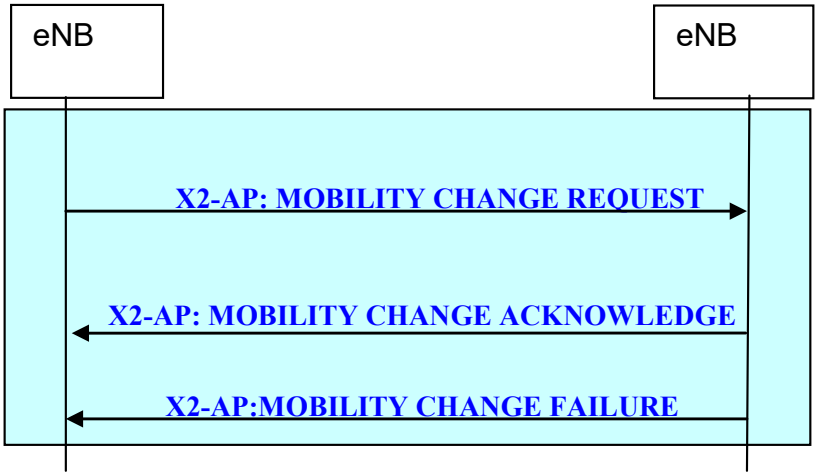


**Figure 20.2.2.14-1: Mobility Settings Change procedure**



Samsung Exhibit 1015, Page 165 of 198
Samsung Electronics Co., Ltd. v. Asus Technology Licensing Inc.
IPR2024-01217

#### 20.2.2.15 Cell Activation procedure

The purpose of the Cell Activation procedure is to enable an eNB to send a CELL ACTIVATION REQUEST message to a peer eNB to request the re-activation of one or more cells, controlled by the peer eNB and which had been previously indicated as dormant.

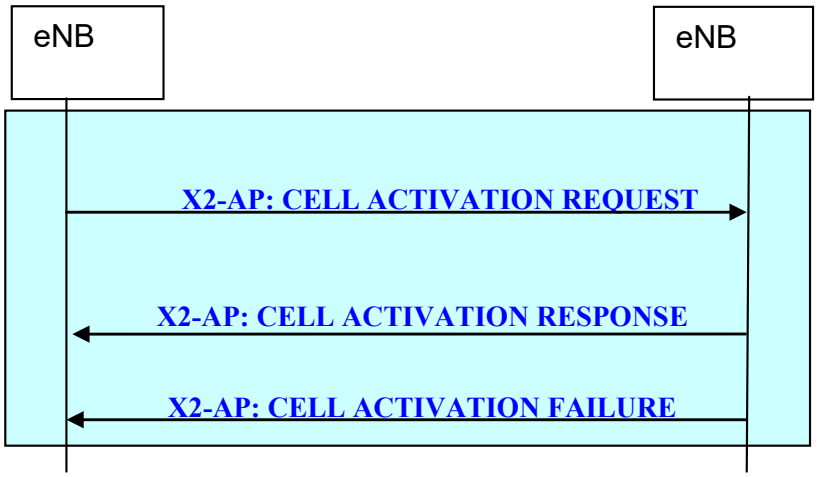


**Figure 20.2.2.15-1: Cell Activation procedure**

### 20.2.3 Void

# 21 Void

## 21.1 Void

## 21.2 Void

## 21.3 Void

# 22 Support for self-configuration and self-optimisation

## 22.1 Definitions

This concept includes several different functions from eNB activation to radio parameter tuning. Figure 22.1-1 is a basic framework for all self-configuration /self-optimization functions.

**Self-configuration process** is defined as the process where newly deployed nodes are configured by automatic installation procedures to get the necessary basic configuration for system operation.

This process works in pre-operational state. Pre-operational state is understood as the state from when the eNB is powered up and has backbone connectivity until the RF transmitter is switched on.



Samsung Exhibit 1015, Page 166 of 198
Samsung Electronics Co., Ltd. v. Asus Technology Licensing Inc.
IPR2024-01217

As described in Figure 21.1, functions handled in the pre-operational state like:

- Basic Setup and
- Initial Radio Configuration

are covered by the Self Configuration process.

**Self-optimization process** is defined as the process where UE & eNB measurements and performance measurements are used to auto-tune the network.

This process works in operational state. Operational state is understood as the state where the RF interface is additionally switched on.

As described in Figure 21.1, functions handled in the operational state like:

- Optimization / Adaptation

are covered by the Self Optimization process.

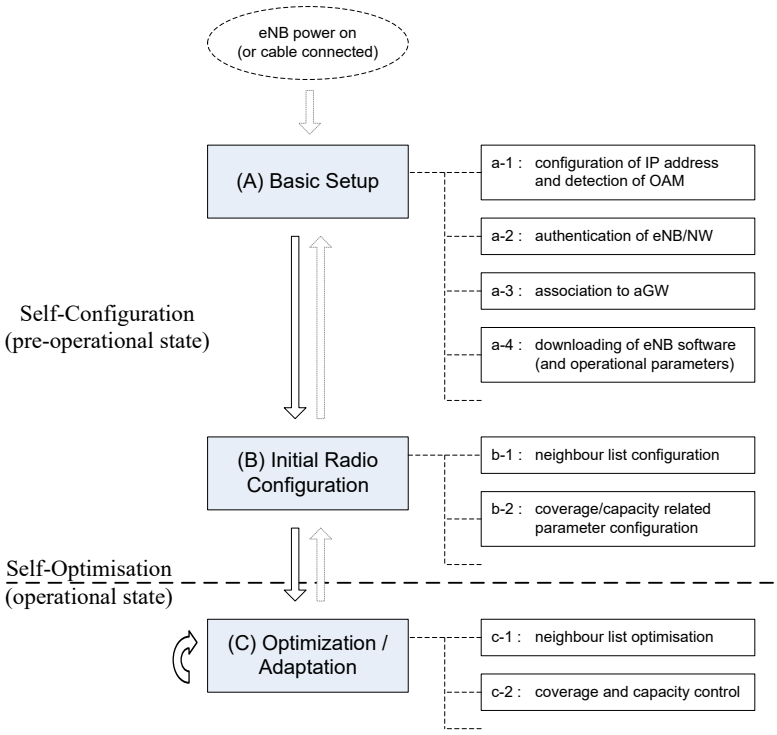


**Figure 22.1-1: Ramifications of Self-Configuration /Self-Optimization functionality**

## 22.2 UE Support for self-configuration and self-optimisation

UE shall support measurements and procedures which can be used for self-configuration and self-optimisation of the E-UTRAN system.

- UE shall support measurements and measurement reporting to support self-optimisation of the E-UTRAN system. Measurements and reports used for the normal system operation, should be used as input for the self-optimisation process as far as possible.
- The network is able to configure the measurements and the reporting for self-optimisation support by RRC signalling messages.



Samsung Exhibit 1015, Page 167 of 198
Samsung Electronics Co., Ltd. v. Asus Technology Licensing Inc.
IPR2024-01217

# 22.3 Self-configuration

## 22.3.1 Dynamic configuration of the S1-MME interface

### 22.3.1.1 Prerequisites

The following prerequisites are assumed:

- An initial remote IP end point to be used for SCTP initialisation is provided to the eNB for each MME. The eNB may be in pre-operational or operational state when this occurs.

How the eNB gets the remote IP end point(s) and its own IP address are outside the scope of this specification.

### 22.3.1.2 SCTP initialization

- For each MME the eNodeB tries to initialize a SCTP association as described in [8], using a known initial remote IP Endpoint as the starting point, until SCTP connectivity is established.

### 22.3.1.3 Application layer initialization

Once SCTP connectivity has been established, the eNodeB and MME shall exchange application level configuration data over the S1-MME application protocol with the S1 Setup Procedure, which is needed for these two nodes to interwork correctly on the S1 interface.

- The eNodeB provides the relevant configuration information to the MME, which includes list of supported TA(s), etc.
- The MME provides the relevant configuration information to the eNodeB, which includes PLMN ID, etc.
- When the application layer initialization is successfully concluded, the dynamic configuration procedure is completed and the S1-MME interface is operational.

## 22.3.2 Dynamic Configuration of the X2 interface

### 22.3.2.1 Prerequisites

The following prerequisites are assumed:

- An initial remote IP end point to be used for SCTP initialisation is provided to the eNB.

### 22.3.2.2 SCTP initialization

For candidate eNB the eNB tries to initialize a SCTP association as described in [8], using a known initial remote IP Endpoint as the starting point, until SCTP connectivity is established.

### 22.3.2.3 Application layer initialization

Once SCTP connectivity has been established, the eNB and its candidate peer eNB are in a position to exchange application level configuration data over the X2 application protocol needed for the two nodes to interwork correctly on the X2 interface.

- The eNB provides the relevant configuration information to the candidate eNB, which includes served cell information, etc.
- The candidate eNB provides the relevant configuration information to the initiating eNB, which includes served cell information, etc.
- When the application layer initialization is successfully concluded, the dynamic configuration procedure is completed and the X2 interface is operational.



Samsung Exhibit 1015, Page 168 of 198
Samsung Electronics Co., Ltd. v. Asus Technology Licensing Inc.
IPR2024-01217

- eNBs shall keep neighbouring eNBs updated with the complete list of served cells while the X2 interface is operational.

## 22.3.2a Automatic Neighbour Relation Function

The purpose of the **Automatic Neighbour Relation** (ANR) function is to relieve the operator from the burden of manually managing Neighbour Relations (NRs). Figure 22.3.2a-1 shows ANR and its environment:

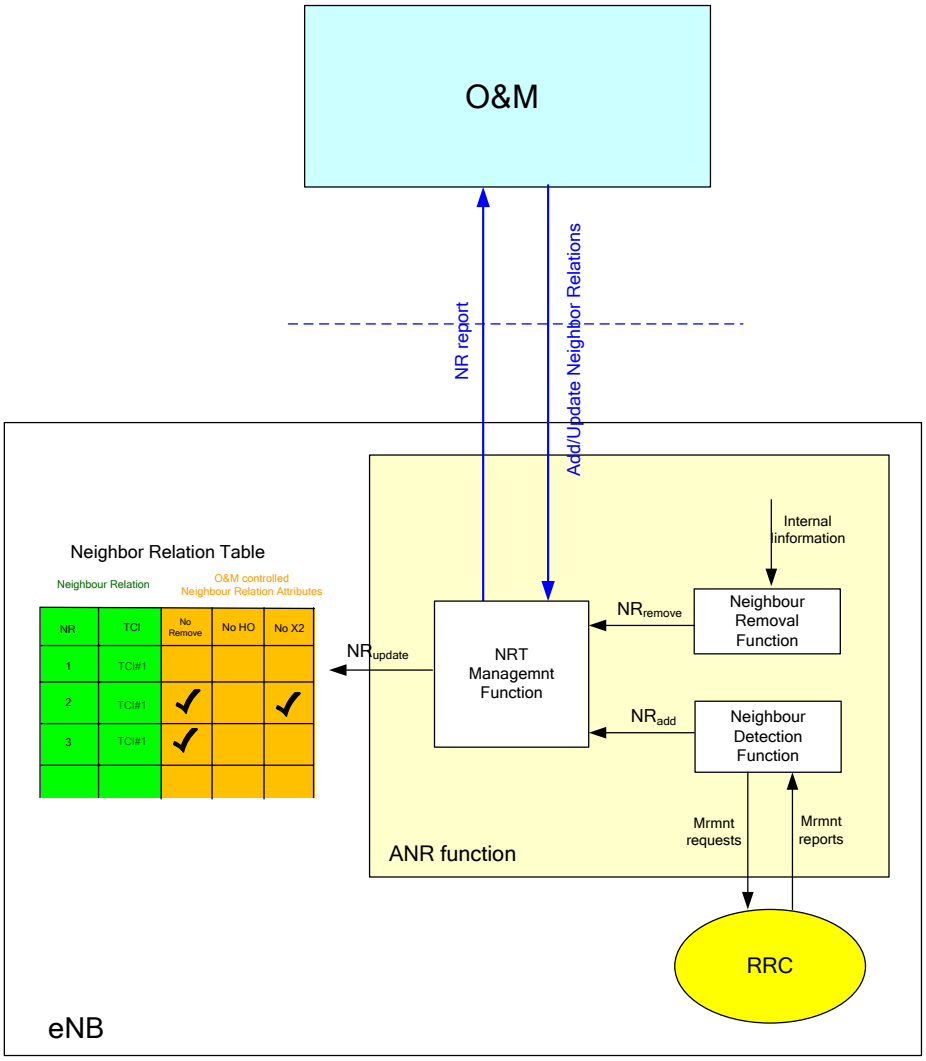


**Figure 22.3.2a-1: Interaction between eNB and O&M due to ANR**

The ANR function resides in the eNB and manages the conceptual Neighbour Relation Table (NRT). Located within ANR, the Neighbour Detection Function finds new neighbours and adds them to the NRT. ANR also contains the Neighbour Removal Function which removes outdated NRs. The Neighbour Detection Function and the Neighbour Removal Function are implementation specific.

A **Neighbour cell Relation** (NR) in the context of ANR is defined as follows:

An existing Neighbour Relation from a source cell to a target cell means that eNB controlling the source cell:

a) Knows the ECGI/CGI and PCI of the target cell.

b) Has an entry in the Neighbour Relation Table for the source cell identifying the target cell.



Samsung Exhibit 1015, Page 169 of 198
Samsung Electronics Co., Ltd. v. Asus Technology Licensing Inc.
IPR2024-01217

c) Has the attributes in this Neighbour Relation Table entry defined, either by O&M or set to default values.

For each cell that the eNB has, the eNB keeps a NRT, see Figure 22.3.2a-1. For each NR, the NRT contains the Target Cell Identifier (TCI), which identifies the target cell. For E-UTRAN, the TCI corresponds to the E-UTAN Cell Global Identifier (ECGI) and Physical Cell Identifier (PCI) of the target cell. Furthermore, each NR has three attributes, the NoRemove, the NoHO and the NoX2 attribute. These attributes have the following definitions:

- **No Remove**: If checked, the eNB shall not remove the Neighbour cell Relation from the NRT.
- **No HO**: If checked, the Neighbour cell Relation shall not be used by the eNB for handover reasons.
- **No X2:** If checked, the Neighbour Relation shall not use an X2 interface in order to initiate procedures towards the eNB parenting the target cell.

Neighbour cell Relations are cell-to-cell relations, while an X2 link is set up between two eNBs. Neighbour cell Relations are unidirectional, while an X2 link is bidirectional.

The ANR function also allows O&M to manage the NRT. O&M can add and delete NRs. It can also change the attributes of the NRT. The O&M system is informed about changes in the NRT.

### 22.3.3 Intra-LTE/frequency Automatic Neighbour Relation Function

The ANR (Automatic Neighbour Relation) function relies on cells broadcasting their identity on global level, E-UTRAN Cell Global Identifier (ECGI).

**Error! Objects cannot be created from editing field codes.**

**Figure 22.3.3-1: Automatic Neighbour Relation Function**

The function works as follows:

The eNB serving cell A has an ANR function. As a part of the normal call procedure, the eNB instructs each UE to perform measurements on neighbour cells. The eNB may use different policies for instructing the UE to do measurements, and when to report them to the eNB. This measurement procedure is as specified in [16].

1. The UE sends a measurement report regarding cell B. This report contains Cell B's PCI, but not its ECGI.

When the eNB receives a UE measurement report containing the PCI, the following sequence may be used.

2. The eNB instructs the UE, using the newly discovered PCI as parameter, to read the ECGI, the TAC and all available PLMN ID(s) of the related neighbour cell. To do so, the eNB may need to schedule appropriate idle periods to allow the UE to read the ECGI from the broadcast channel of the detected neighbour cell. How the UE reads the ECGI is specified in [16].
3. When the UE has found out the new cell's ECGI, the UE reports the detected ECGI to the serving cell eNB. In addition the UE reports the tracking area code and all PLMN IDs that have been detected. If the detected cell is a CSG or hybrid cell, the UE also reports the CSG ID to the serving cell eNB.
4. The eNB decides to add this neighbour relation, and can use PCI and ECGI to:
   a Lookup a transport layer address to the new eNB.
   b Update the Neighbour Relation List.
   c If needed, setup a new X2 interface towards this eNB. The setup of the X2 interface is described in section 22.3.2.

NOTE: The eNB may differentiate the open access HeNB from the other types of (H)eNB by the PCI configuration or ECGI configuration.



Samsung Exhibit 1015, Page 170 of 198
Samsung Electronics Co., Ltd. v. Asus Technology Licensing Inc.
IPR2024-01217

### 22.3.4 Inter-RAT/Inter-frequency Automatic Neighbour Relation Function

**Error! Objects cannot be created from editing field codes.**

**Figure 22.3.4-1: Automatic Neighbour Relation Function in case of UTRAN detected cell**

For Inter-RAT and Inter-Frequency ANR, each cell contains an Inter Frequency Search list. This list contains all frequencies that shall be searched.

For Inter-RAT cells, the NoX2 attribute in the NRT is absent, as X2 is only defined for E-UTRAN.

The function works as follows:

The eNB serving cell A has an ANR function. During connected mode, the eNB can instruct a UE to perform measurements and detect cells on other RATs/frequencies. The eNB may use different policies for instructing the UE to do measurements, and when to report them to the eNB.

1 The eNB instructs a UE to look for neighbour cells in the target RATs/frequencies. To do so the eNB may need to schedule appropriate idle periods to allow the UE to scan all cells in the target RATs/frequencies.

2 The UE reports the PCI of the detected cells in the target RATs/frequencies. The PCI is defined by the carrier frequency and the Primary Scrambling Code (PSC) in case of UTRAN FDD cell, by the carrier frequency and the cell parameter ID in case of UTRAN TDD cell, by the Band Indicator + BSIC + BCCH ARFCN in case of GERAN cell and by the PN Offset in case of CDMA2000 cell.

When the eNB receives UE reports containing PCIs of cell(s) the following sequence may be used.

3 The eNB instructs the UE, using the newly discovered PCI as parameter, to read the CGI and the RAC of the detected neighbour cell in case of GERAN detected cells, CGI, LAC and, RAC in case of UTRAN detected cells and CGI in case of CDMA2000 detected cells. For the Interfrequency case, the eNB instructs the UE, using the newly discovered PCI as parameter, to read the ECGI, TAC and all available PLMN ID(s) of the inter-frequency detected cell. The UE ignores transmissions from the serving cell while finding the requested information transmitted in the broadcast channel of the detected inter-system/inter-frequency neighbour cell. To do so, the eNB may need to schedule appropriate idle periods to allow the UE to read the requested information from the broadcast channel of the detected inter-RAT/inter-frequency neighbour cell.

4 After the UE has read the requested information in the new cell, it reports the detected CGI and RAC (in case of GERAN detected cells) or CGI, LAC and RAC (in case of UTRAN detected cells) or CGI (in case of CDMA2000 detected cells) to the serving cell eNB. In the inter-frequency case, the UE reports the ECGI, the, tracking area code and all PLMN-ID(s) that have been detected. If the detected cell is a CSG or hybrid cell, the UE also reports the CSG ID to the serving cell eNB.

5 The eNB updates its inter-RAT/inter-frequency Neighbour Relation Table.

In the inter-frequency case and if needed, the eNB can use the PCI and ECGI for a new X2 interface setup towards this eNB. The setup of the X2 interface is described in section 22.3.2.

NOTE: The eNB may differentiate the open access HeNB from the other types of (H)eNB by the PCI configuration or ECGI configuration.

### 22.3.5 Framework for PCI Selection

The eNB shall base the selection of its PCI either on a centralized or distributed PCI assignment algorithm:

[Centralized PCI assignment] The OAM signals a specific PCI value. The eNB shall select this value as its PCI.

[Distributed PCI assignment] The OAM signals a list of PCI values. The eNB may restrict this list by removing PCI-s that are:

a) reported by UEs;

b) reported over the X2 interface by neighbouring eNBs; and/or

c) acquired through other implementation dependent methods, e.g. heard over the air using a downlink receiver.



Samsung Exhibit 1015, Page 171 of 198
Samsung Electronics Co., Ltd. v. Asus Technology Licensing Inc.
IPR2024-01217

The eNB shall select a PCI value randomly from the remaining list of PCIs.

### 22.3.6 TNL address discovery

#### 22.3.6.1 TNL address discovery of candidate eNB via S1 interface

If the eNB is aware of the eNB ID of the candidate eNB (e.g. via the ANR function) but not a TNL address suitable for SCTP connectivity, then the eNB can utilize the Configuration Transfer Function to determine the TNL address as follows:

- The eNB sends the eNB CONFIGURATION TRANSFER message to the MME to request the TNL address of the candidate eNB, and includes relevant information such as the source and target eNB ID.
- The MME relays the request by sending the MME CONFIGURATION TRANSFER message to the candidate eNB identified by the target eNB ID.
- The candidate eNB responds by sending the eNB CONFIGURATION TRANSFER message containing one or more TNL addresses to be used for SCTP connectivity with the initiating eNB, and includes other relevant information such as the source and target eNB ID.
- The MME relays the response by sending the MME CONFIGURATION TRANSFER message to the initiating eNB identified by the target eNB ID.

## 22.4 Self-optimisation

### 22.4.1 Support for Mobility Load Balancing

#### 22.4.1.1 General

The objective of load balancing is to distribute cell load evenly among cells or to transfer part of the traffic from congested cells. This is done by the means of self-optimisation of mobility parameters or handover actions.

Self-optimisation of the intra-LTE and inter-RAT mobility parameters to the current load in the cell and in the adjacent cells can improve the system capacity compared to static/non-optimised cell reselection/handover parameters. Such optimisation can also minimize human intervention in the network management and optimization tasks.

Support for mobility load balancing consists of one or more of following functions:

- Load reporting;
- Load balancing action based on handovers;
- Adapting handover and/or reselection configuration.

Triggering of each of these functions is optional and depends on implementation. Functional architecture is presented in Figure 22.4.1.1-1.



Samsung Exhibit 1015, Page 172 of 198
Samsung Electronics Co., Ltd. v. Asus Technology Licensing Inc.
IPR2024-01217

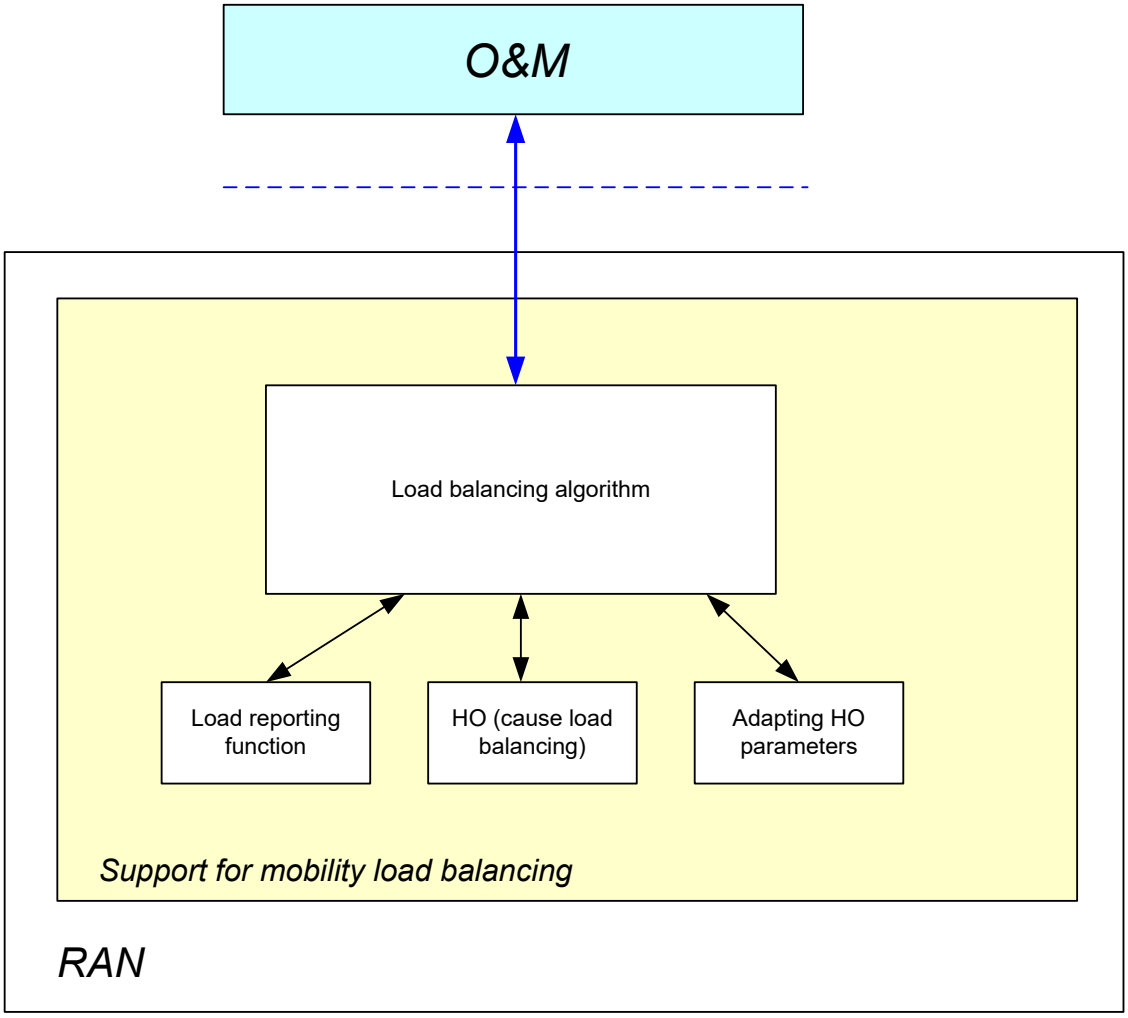


**Figure 22.4.1.1-1: Functional architecture of SON load balancing**

### 22.4.1.2 Load reporting

The load reporting function is executed by exchanging cell specific load information between neighbour eNBs over the X2 interface (intra-LTE scenario) or S1 (inter-RAT scenario). The load information consists of:

For intra-LTE scenario:

- radio resource usage (UL/DL GBR PRB usage, UL/DL non-GBR PRB usage, UL/DL total PRB usage),
- HW load indicator (UL/DL HW load: low, mid, high, overload),
- TNL load indicator (UL/DL TNL load: low, mid, high, overload),
- (Optionally) Cell Capacity Class value (UL/DL relative capacity indicator: the same scale shall apply to E-UTRAN, UTRAN and GERAN cells when mapping cell capacities on this value),
- Capacity value (UL/DL available capacity for load balancing as percentage of total cell capacity)

For inter-RAT scenario:

- Cell Capacity Class value (UL/DL relative capacity indicator: the same scale shall apply to E-UTRAN, UTRAN and GERAN cells when mapping cell capacities on this value).
- Capacity value (UL/DL available capacity for load balancing as percentage of total cell capacity)

NOTE 1: Capacity value is expressed in available E-UTRAN resources.



Samsung Exhibit 1015, Page 173 of 198
Samsung Electronics Co., Ltd. v. Asus Technology Licensing Inc.
IPR2024-01217

NOTE 2: A cell is expected to accept traffic corresponding to the indicated available capacity.

- Event-triggered inter-RAT load reports are sent when the reporting node detects crossing of cell load thresholds.

Load information shall be provided in a procedure separated from existing active mode mobility procedures, which shall be used infrequently and with lower priority with respect to the UE dedicated signalling.

#### 22.4.1.3 Load balancing action based on handovers

The source cell may initiate handover due to load (see sub-clauses 10.1.2 and 10.2.2). The target cell performs admission control for the load balancing handovers. A handover preparation related to a mobility load balancing action shall be distinguishable from other handovers, so that the target cell is able to apply appropriate admission control.

#### 22.4.1.4 Adapting handover and/or reselection configuration

This function enables requesting of a change of handover and/or reselection parameters at target cell. The source cell that initialized the load balancing estimates if it is needed to change mobility configuration in the source and/or target cell. If the amendment is needed, the source cell initializes mobility negotiation procedure toward the target cell.

The source cell informs the target cell about the new mobility setting and provides cause for the change (e.g. load balancing related request). The proposed change is expressed by the means of the difference (delta) between the current and the new values of the handover trigger. The handover trigger is the cell specific offset that corresponds to the threshold at which a cell initialises the handover preparation procedure. Cell reselection configuration may be amended to reflect changes in the HO setting. The target cell responds to the information from the source cell. The allowed delta range for HO trigger parameter may be carried in the failure response message. The source cell should consider the responses before executing the planned change of its mobility setting.

All automatic changes on the HO and/or reselection parameters must be within the range allowed by OAM.

### 22.4.2 Support for Mobility Robustness Optimisation

#### 22.4.2.1 General

Mobility Robustness Optimisation aims at detecting and enabling correction of following problems:

- Connection failure due to intra-LTE mobility
- Unnecessary HO to another RAT (too early IRAT HO with no radio link failure)

#### 22.4.2.2 Connection failure due to intra-LTE mobility

One of the functions of Mobility Robustness Optimization is to detect connection failures that occur due to Too Early or Too Late Handovers, or Handover to Wrong Cell. These problems are defined as follows:

- [Too Late HO] A connection failure occurs in the source cell before the handover was initiated or during a handover; the UE attempts to re-establish the radio link connection in the target cell (if handover was initiated) or in a cell that is not the source cell (if handover was not initiated).
- [Too Early HO] A connection failure occurs shortly after a successful handover from a source cell to a target cell or during a handover; the UE attempts to re-establish the radio link connection in the source cell.
- [HO to Wrong Cell] A connection failure occurs shortly after a successful handover from a source cell to a target cell or during a handover; the UE attempts to re-establish the radio link connection in a cell other than the source cell and the target cell.

In addition MRO provides means to distinguish LTE coverage related problems from the above problems. Handling of failure cases related to LTE coverage problems is FFS.

Solution for failure scenarios consists of one or more of following functions:

- Detection of the failure after RRC re-establishment attempt
- Detection of the failure after RRC connection setup



Samsung Exhibit 1015, Page 174 of 198
Samsung Electronics Co., Ltd. v. Asus Technology Licensing Inc.
IPR2024-01217

Triggering of each of these functions is optional and depends on situation and implementation.

**Detection of the failure after RRC re-establishment attempt:**

Detection mechanisms for these three cases are carried out through the following:

- [Too Late HO]
  If the UE attempts to re-establish the radio link connection in a cell that belongs to eNB B, after a failure at the source cell belonging to eNB A, different from eNB B, then eNB B may report this event to eNB A by means of the RLF Indication Procedure.

- [Too Early HO]
  In case the connection failure does not occur during handover and if the target cell belongs to an eNB B different from the eNB A that controls the source cell, the eNB B may send a HANDOVER REPORT message indicating a Too Early HO event to eNB A upon eNB B receives an RLF INDICATION message from eNB A and if eNB B has sent the UE CONTEXT RELEASE message to eNB A related to the completion of an incoming handover for the same UE within the last Tstore_UE_cntxt seconds.

- [HO to Wrong Cell]
  If the handover from the source cell to the target cell was successful and the target cell belongs to eNB B that is different from the eNB A that controls the source cell, the eNB B may send a HANDOVER REPORT message indicating a HO To Wrong Cell event to eNB A upon eNB B receives an RLF INDICATION message from eNB C, and if eNB B has sent the UE CONTEXT RELEASE message to eNB A related to the completion of an incoming handover for the same UE within the last Tstore_UE_cntxt seconds. This also applies when eNB A and eNB C is the same. The HANDOVER REPORT message may also be sent if eNB B and eNB C are the same and the RLF Indication is internal to this eNB.
  If the handover from the source cell in eNB A to the target cell was not successful, and the UE attempts to re-establish the radio link connection to a cell in eNB C, then eNB C may send a RLF INDICATION message to eNB A. The detection of the above events, when involving more than one eNB, is enabled by the RLF Indication and Handover Report procedures.

The RLF Indication procedure may be initiated after a UE attempts to re-establish the radio link connection at eNB B after a failure at eNB A. The RLF INDICATION message sent from eNB B to eNB A shall contain the following information elements:

- Failure Cell ID: PCI of the cell in which the UE was connected prior to the failure occurred;

- Reestablishment Cell ID: ECGI of the cell where RL re-establishment attempt is made;

- C-RNTI: C-RNTI of the UE in the cell where UE was connected prior to the failure occurred.

- shortMAC-I (optionally): the 16 least significant bits of the MAC-I calculated using the security configuration of the source cell and the re-establishment cell identity.

eNB B may initiate RLF Indication towards multiple eNBs if they control cells which use the PCI signalled by the UE during the re-establishment procedure. The eNB A selects the UE context that matches the received Failure Cell ID and C-RNTI, and, if available, uses the shortMAC-I to confirm this identification, by calculating the shortMAC-I and comparing it to the received IE.

The Handover Report procedure is used in the case of recently completed handovers, when a failure occurs in the target cell (in eNB B) shortly after it sent the UE Context Release message to the source eNB A. The HANDOVER REPORT message contains the following information:

- Type of detected handover problem (Too Early HO, HO to Wrong Cell);

- ECGI of source and target cells in the handover;

- ECGI of the re-establishment cell (in the case of HO to Wrong Cell);

- Handover cause (signalled by the source during handover preparation).

**Detection of the failure after RRC connection setup:**

Detection of the Too Early or Too Late Handovers, or Handover to Wrong Cell is based on the information available in the RLF Report that may be provided from the UE in case of successful RRC re-establishment. In case the re-establishment fails or UE initiates RRC connection setup directly after connection failure, the UE may provide the RLF



Samsung Exhibit 1015, Page 175 of 198
Samsung Electronics Co., Ltd. v. Asus Technology Licensing Inc.
IPR2024-01217

Report to the eNB where it sets up RRC connection first time after the connection failure. Availability of the RLF Report at the RRC connection setup procedure is the indication that the UE recovers from a connection failure and that the RLF Report from this failure was not yet delivered to the network.

The eNB receiving the RLF Report from the UE may forward the report to the eNB that served the UE before the reported connection failure or to the eNB where the mobility configuration caused the failure. The radio measurements contained in the RLF Report may be used to identify coverage hole as the root cause of the failure. This information can be used to exclude those events from the MRO evaluation of intra-LTE mobility connection failures and redirect them as input to other algorithms, e.g. CCO.

The procedure to be used to inform other eNBs about the connection failure is FFS.

#### 22.4.2.3 Unnecessary HO to another RAT

One of the purposes of inter-RAT Mobility Robustness Optimisation is the detection of a non-optimal use of network resources. In particular, in case of inter-RAT operations and when E-UTRAN is considered, the case known as Unnecessary HO to another RAT is identified. The problem is defined as follows:

- UE is handed over from E-UTRAN to other RAT (e.g. GERAN or UTRAN) even though quality of the E-UTRAN coverage was sufficient for the service used by the UE. The handover may therefore be considered as unnecessary HO to another RAT (too early IRAT HO without connection failure).

In inter-RAT HO, if the serving cell threshold (E-UTRAN) is set too high, and another RAT with good signal strength is available, a handover to another RAT (e.g. UTRAN or GERAN) may be triggered unnecessarily, resulting in an inefficient use of the networks. With a lower threshold the UE could have continued in the source RAT (E-UTRAN).

To be able to detect the Unnecessary HO to another RAT, an eNB may choose to put additional coverage and quality condition information into the HANDOVER REQUIRED message in the Handover Preparation procedure when an inter-RAT HO from E-UTRAN to another RAT occurs. The RAN node in the other RAT, upon receiving of this additional coverage and quality information, may instruct the UE to continue measuring the source RAT (E-UTRAN) during a period of time, while being connected to another RAT (e.g. UTRAN or GERAN), and send a periodic or single measurement reports to the other RAT (e.g. UTRAN or GERAN). The RAN node in the other RAT (e.g. UTRAN or GERAN), when applicable, may evaluate the received measurement reports with the coverage/quality condition received during the inter-RAT HO procedure and decide if an inter-RAT unnecessary HO report should be sent to the RAN node in the source RAT (E-UTRAN), which should include the following information:

- Handover type (LTE to UTRAN, LTE to GERAN);
- Type of detected handover problem (Unnecessary HO to another RAT);
- ECGI of the source cell in the handover;
- Cell ID of the target cell;
- A list of cells whose radio quality fulfils the threshold during a certain time period (both the threshold and the time period are indicated in the additional coverage and quality information in the Handover Preparation procedure)

The RAN node in the source RAT (E-UTRAN) upon receiving of the report, can decide if/how its parameters (e.g., threshold to trigger IRAT HO) should be adjusted.

### 22.4.3 Support for RACH Optimisation

The setting of RACH parameters that can be optimized are:

- RACH configuration (resource unit allocation);
- RACH preamble split (among dedicated, group A, group B);
- RACH backoff parameter value;
- RACH transmission power control parameters.

UEs which receive polling signalling shall report the below information:



Samsung Exhibit 1015, Page 176 of 198
Samsung Electronics Co., Ltd. v. Asus Technology Licensing Inc.
IPR2024-01217

- Number of RACH preambles sent until the successful RACH completion;
- Contention resolution failure.

## 22.4.4 Support for Energy Saving

### 22.4.4.1 General

The aim of this function is to reduce operational expenses through energy savings.

The function allows, for example in a deployment where capacity boosters can be distinguished from cells providing basic coverage, to optimize energy consumption enabling the possibility for a cell providing additional capacity, to be switched off when its capacity is no longer needed and to be re-activated on a need basis.

### 22.4.4.2 Solution description

The solution builds upon the possibility for the eNB owning a capacity booster cell to autonomously decide to switch-off such cell to lower energy consumption (dormant state). The decision is typically based on cell load information, consistently with configured information. The switch-off decision may also be taken by O&M.

The eNB may initiate handover actions in order to off-load the cell being switched off and may indicate the reason for handover with an appropriate cause value to support the target eNB in taking subsequent actions, e.g. when selecting the target cell for subsequent handovers.

All peer eNBs are informed by the eNB owning the concerned cell about the switch-off actions over the X2 interface, by means of the eNB Configuration Update procedure.

All informed eNBs maintain the cell configuration data also when a certain cell is dormant. ENBs owning non-capacity boosting cells may request a re-activation over the X2 interface if capacity needs in such cells demand to do so. This is achieved via the Cell Activation procedure.

The eNB owning the dormant cell should normally obey a request. The switch-on decision may also be taken by O&M. All peer eNBs are informed by the eNB owning the concerned cell about the re-activation by an indication on the X2 interface.

### 22.4.4.3 O&M requirements

Operators should be able to configure the energy saving function.

The configured information should include:

- The ability of an eNB to perform autonomous cell switch-off.
- The ability of an eNB to request the re-activation of a configured list of dormant cells owned by a peer eNB.

O&M may also configure

- policies used by the eNB for cell switch-off decision.
- policies used by peer eNBs for requesting the re-activation of a dormant cell.



Samsung Exhibit 1015, Page 177 of 198
Samsung Electronics Co., Ltd. v. Asus Technology Licensing Inc.
IPR2024-01217

## 22.5 Void

## 22.6 Void

# 23 Others

## 23.1 Support for real time IMS services

### 23.1.1 IMS Emergency Call

IMS emergency calls are supported in this release of the specification and UE may initiate an IMS emergency call on the PS domain if the network supports it. IMS Emergency call support indication is provided to inform the UE that emergency bearer services are supported. This is sent via NAS messaging for normal service mode UE and via a BCCH indicator for limited service mode UE [17]. The BCCH indicator is set to 'support' if any of the MMEs in a non-shared environment or one of PLMNs in a shared network environment supports IMS emergency bearer services.

If at the time of an IMS emergency call origination, the UE is already RRC connected to a CN that does not support IMS emergency calls, it should autonomously release the RRC connection and originate a fresh RRC connection in a cell that is capable of handling emergency calls. Call admission control for IMS emergency call is based on bearer QoS (e.g. the ARP).

Security procedures are activated for emergency calls. For UE in limited service mode and the UE is not authenticated (as defined in TS33.401 Section 15.2.2), 'NULL' algorithms for ciphering and integrity protection are used and the related keys are set to specified value and may be ignored by the receiving node. During handover from cell in non-restricted area to restricted area, security is handled normally with normal key derivation etc. for both the intra-LTE and inter-RAT handover. For inter-RAT handover from LTE, if 'NULL' Integrity Protection algorithms are used in LTE, security is stopped after the handover. For inter-RAT handover to LTE, security is activated after the handover with 'NULL' algorithms if security is not activated in the source RAT.

## 23.2 Subscriber and equipment trace

Support for subscriber and equipment trace for E-UTRAN and EPC shall be as specified in [29], [30] and [31].

### 23.2.1 Signalling activation

All traces are initiated by the core network, even if the trace shall be carried out in the radio network.

If the eNB has received an UE CONTEXT RELEASE COMMAND message where the UE is associated to an E-UTRAN Trace Id then the eNB shall terminate the on-going Trace.

The following functionality is needed on the S1 and X2 interface:

- Support for inclusion of subscriber and equipment trace information in INITIAL CONTEXT SETUP REQUEST message over the S1 interface.
- Support for an explicit TRACE START message over the S1 interface.
- Support for inclusion of subscriber and equipment trace information in the HANDOVER REQUEST message over the X2 interface.
- Support for inclusion of subscriber and equipment trace information in the HANDOVER REQUEST message over the S1 interface.
- Support for TRACE FAILURE INDICATION for the purpose of informing MME that the requested trace action cannot be performed due to an on-going handover preparation over the X2 interface.



Samsung Exhibit 1015, Page 178 of 198
Samsung Electronics Co., Ltd. v. Asus Technology Licensing Inc.
IPR2024-01217

A trace setup in the radio network will be propagated at handover. If the eNB receives trace information for a given UE, and a handover preparation is not already ongoing for the same UE, it shall store the trace information and propagate it to the target eNB in the case of a X2 based HO. In the case of S1 based HO, the propagation is handled by the MME.

### 23.2.2 Management activation

All conditions for Cell Traffic Trace are defined by the O&M. When the condition to start the trace recording is fulfilled the eNB will allocate a Trace Recording Session Reference and send it together with the Trace Reference to the MME in a CELL TRAFFIC TRACE message over the S1 interface.

Cell Traffic trace will not be propagated on the X2 interface or on the S1 interface in case of handover.

## 23.3 E-UTRAN Support for Warning Systems

The E-UTRAN provides support for warning systems through means of system information broadcast capability. The E-UTRAN performs scheduling and broadcasting of the "warning message content" received from the CBC, which is forwarded to the E-UTRAN by the MME. The schedule information for the broadcast is received along with the "warning message content" from the CBC. The E-UTRAN is also responsible for paging the UE to provide indication that the warning notification is being broadcast. The "warning message content" received by the E-UTRAN contains an instance of the warning notification. Depending on the size, E-UTRAN may segment the secondary notification before sending it over the radio interface.

### 23.3.1 Earthquake and Tsunami Warning System

ETWS is a public warning system developed to meet the regulatory requirements for warning notifications related to earthquake and/or tsunami events. ETWS warning notifications can either be a primary notification (short notifications delivered within 4 seconds [32]) or secondary notification (providing detailed information). The ETWS primary notification is broadcast in *SystemInformationBlockType10* while the secondary notification is broadcast in *SystemInformationBlockType11*.

### 23.3.2 Commercial Mobile Alert System

CMAS is a public warning system developed for the delivery of multiple, concurrent warning notifications [34]. The CMAS warning notifications are short text messages (CMAS alerts). The CMAS warning notifications are broadcast in *SystemInformationBlockType12*. The E-UTRAN manages the delivery of multiple, concurrent CMAS warning notifications to the UE and is also responsible for handling any updates of CMAS warning notifications.



Samsung Exhibit 1015, Page 179 of 198
Samsung Electronics Co., Ltd. v. Asus Technology Licensing Inc.
IPR2024-01217

# Annex A (informative): NAS Overview

This subclause provides for information an overview on services and functions provided by the NAS control protocol..

## A.1 Services and Functions

The main services and functions of the NAS sublayer include:

- EPS Bearer control (see 3GPP TR 23.401 [17]);
- ECM-IDLE mobility handling;
- Paging origination;
- Configuration and control of Security.

## A.2 NAS protocol states & state transitions

The NAS state model is based on a two-dimensional model which consists of EPS Mobility Management (EMM) states describing the mobility management states that result from the mobility management procedures e.g. Attach and Tracking Area Update procedures, and of EPS Connection Management (ECM) states describing the signalling connectivity between the UE and the EPC (see 3GPP TS 23.401 [17]).

NOTE: The ECM and EMM states are independent of each other and when the UE is in EMM-CONNECTED state this does not imply that the user plane (radio and S1 bearers) is established.

The relation between NAS and AS states is characterised by the following principles:

- EMM-DEREGISTERED & ECM-IDLE ⇒ RRC_IDLE:
  - Mobility: PLMN selection:
  - UE Position: not known by the network.
- EMM-REGISTERED & ECM-IDLE ⇒ RRC_IDLE:
  - Mobility: cell reselection;
  - UE Position: known by the network at tracking area level.
- EMM-REGISTERED & ECM-CONNECTED with radio bearers established ⇒ RRC_CONNECTED.
  - Mobility: handover;
  - UE Position: known by the network at cell level.



Samsung Exhibit 1015, Page 180 of 198
Samsung Electronics Co., Ltd. v. Asus Technology Licensing Inc.
IPR2024-01217

# Annex B (informative): MAC and RRC Control

The E-UTRA supports control signalling in terms of MAC control signalling (PDCCH and MAC control PDU) and RRC control signalling (RRC message).

## B.1 Difference between MAC and RRC control

The different characteristics of MAC and RRC control are summarized in the table below.

**Table B.1-1: Summary of the difference between MAC and RRC control**

| | MAC control | | RRC control |
|---|---|---|---|
| **Control entity** | **MAC** | | **RRC** |
| **Signalling** | PDCCH | MAC control PDU | RRC message |
| **Signalling reliability** | ~ $10^{-2}$ (no retransmission) | ~ $10^{-3}$ (after HARQ) | ~ $10^{-6}$ (after ARQ) |
| **Control delay** | Very short | Short | Longer |
| **Extensibility** | None or very limited | Limited | High |
| **Security** | No integrity protection<br>No ciphering | No integrity protection<br>No ciphering | Integrity protection<br>Ciphering |

The main difference between MAC and RRC control lies in the signalling reliability. Due to the signalling reliability, signalling involving state transitions and radio bearer configurations should be performed by RRC. Basically, all signalling performed by RRC in UTRA should also be performed by RRC also for E-UTRA.

## B.2 Void



Samsung Exhibit 1015, Page 181 of 198
Samsung Electronics Co., Ltd. v. Asus Technology Licensing Inc.
IPR2024-01217

# Annex C (informative): Void

# Annex D (informative): Void

# Annex E (informative): Void

# Annex F (informative): Void



Samsung Exhibit 1015, Page 182 of 198
Samsung Electronics Co., Ltd. v. Asus Technology Licensing Inc.
IPR2024-01217

# Annex G (informative): Guideline for E-UTRAN UE capabilities

Each radio access technology has defined specific "classes" of terminals in terms of radio capabilities. E.g. in GPRS the "multislot classes" are defined, in UMTS R'99 different dedicated bearer classes are defined and for HSDPA and HSUPA 12 respectively 6 physical layer categories are defined. The definition of UMTS R'99 UE classes lead to 7 DL classes and 7 UL classes for FDD out of which only 2 DL and 3 UL classes were commercially realized. Furthermore the lower end classes (e.g. 64 UL and 64 DL) disappeared from the market with commercialization of the UMTS networks quite soon. Besides these class definitions a huge number of possible parameter combinations (to achieve certain data rates) exist with UMTS R'99 which lead to the huge number of RAB and RB combinations defined. Further activities in the early phase of UMTS standardization aimed to reduce the number of possible combinations significantly.

For HSDPA two "simple" DL categories (11 & 12) with lowered complexity were defined with the intent to speed up commercialization of HSDPA. Originally those categories should have been removed for Rel-6. Out of the 12 defined categories only approx. 4 will be realized in commercial HSDPA platform products. A similar situation is likely for HSUPA as well as for the combinations of HSDPA/HSUPA.

Generally the aim to mandate certain essential functions/requirements can help to simplify the system definition as well as the realization options (e.g. mandating 20 MHz of DL reception as well as 20 MHz UL transmission bandwidth significantly reduced the E-UTRAN system complexity). Especially mandating certain terminal functions could be useful for the system design if a defined subset of parameter combinations are also supported by the systems, e.g. the eNB scheduler. However, there is also a risk that not all the defined E-UTRA features are deployed in the networks at the time when terminals are made commercially available on the market place. Some features are likely to be rather large and complex, which further increases the risk of interoperability problems unless these features have undergone sufficient interoperability testing (IOT) on real network equipment, and preferably with more than one network in order to improve the confidence of the UE implementation. Thus, avoiding unnecessary UE mandatory features but instead defining a limited set of UE radio classes allows simplification for the interoperability testing.

Given the discussion above, it seems beneficial for the introduction of E-UTRAN to limit the combination of radio capabilities to a clearly defined subset and ensure that a given set of parameters is supported by certain UE classes as well as networks for rapid E-UTRAN deployment. It seems unrealistic to mandate only one single UE class which always mandates the maximum capability.

In order to address the different market requirements (low end, medium and high end), the definition of the following UE classes are proposed:

**Table G-1: E-UTRAN UE Classes**

| Class | UL | DL |
|---|---|---|
| A | [50] Mbps | [100] Mbps |
| B | [25] Mbps | [50] Mbps |
| C | [2] Mbps | [2] Mbps |

NOTE: For simplification reasons, the table only depict the UE capabilities in terms of uplink and downlink peak data rates supported. However, it should be noted that further discussion on other features is expected once the work progresses.

It may require further discussion whether there be a need for an additional terminal class between 2 Mbps and 50 Mbps classes. It might make sense, since up to 5 MHz band allocations may be rather common in real deployments for several years. This would point to bit rate class of 25 Mbps in DL and 10 Mbps in UL.

The above given data rates are indicative and should be subject for further discussions in 3GPP RAN working groups. Depending on the different solutions to reach those data rates, the target should be to define [3..4] UE classes in different data rate ranges, and other parameters affecting device complexity and cost. The definition of the required parameters/features is for further study for each of the classes. For instance, half-duplex UEs form a specific category that may be frequency band specific.



Samsung Exhibit 1015, Page 183 of 198
Samsung Electronics Co., Ltd. v. Asus Technology Licensing Inc.
IPR2024-01217

NOTE: the support of half-duplex UEs is mandatory for the eNB where such a category is allowed in the frequency band supported by the eNB.

The aim is to ensure on the one hand that high end E-UTRAN UEs, supporting data rates representing state of the art level and competitive with other radio technologies are defined, while the medium and lower data rates aim to reduce implementation cost for chipset/terminal vendors and allow adoption of most cost efficient solutions for different market segments. It is expected that the support of the high end data rate terminals is ensured from the very beginning.

Another clear exception from this exercise is that on the low end very cheap product implementation is possible (e.g. for the machine-to-machine market or the voice and very low data rate only segment – to substitute GSM in the medium term) while top end performance is needed for data applications in notebooks, wireless gateways ("wireless DSL"), etc.

Another important aspect that must be ensured is that a higher capability UE can be treated in exactly the same way as for a lower capability UE, if the network wishes to do so, e.g., in case the network does not support some higher capability features. In HSDPA, there has been problems in this respect due to 2-stage rate matching in HARQ. Such problems should be avoided in E-UTRAN, and E-UTRAN UE capabilities should provide the compatibility to ease implementation and interoperability testing.

# Annex H (informative): Void

# Annex I (informative): SPID ranges ad mapping of SPID values to cell reselection and inter-RAT/inter frequency handover priorities

This Annex defines two ranges of SPID (Subscriber Profile ID for RAT/Frequency Priority) values, respectively Operator Specific and Reference values. The mapping at eNB of Reference SPID values to cell reselection and inter-RAT/inter frequency handover priorities is defined.

## I.1 SPID ranges

Values 1- 128 - Operator specific SPID values;

Values 129 - 256 - Reference values.

## I.2 Reference SPID values

SPID = 256



Samsung Exhibit 1015, Page 184 of 198
Samsung Electronics Co., Ltd. v. Asus Technology Licensing Inc.
IPR2024-01217

**Table I.2-1: eNB local configuration in idle and connected mode for SPID = 256**

| Configuration parameter | Value | Meaning |
|---|---|---|
| E-UTRAN carriers priority | high | The selection priorities for idle and connected mode of all E-UTRAN carriers are higher than the priorities for all UTRAN and GERAN carriers |
| UTRAN carriers priority | medium | The selection priorities for idle and connected mode of all UTRAN carriers are lower than the priorities for all E-UTRAN carriers and higher than the priorities for all GERAN carriers |
| GERAN carriers priority | low | The selection priorities for idle and connected mode of all GERAN carriers are lower than the priorities for all E-UTRAN and UTRAN carriers |

SPID = 255

**Table I.2-2: eNB local configuration in idle and connected mode for SPID = 255**

| Configuration parameter | Value | Meaning |
|---|---|---|
| UTRAN carriers priority | high | The selection priorities for idle and connected mode of all UTRAN carriers are higher than the priorities for all GERAN and E-UTRAN carriers |
| GERAN carriers priority | medium | The selection priorities for idle and connected mode of all GERAN carriers are lower than the priorities for all UTRAN carriers and higher than the priorities for all E-UTRAN carriers |
| E-UTRAN carriers priority | low | The selection priorities for idle and connected mode of all E-UTRAN carriers are lower than the priorities for all UTRAN and GERAN carriers |

SPID = 254

**Table I.2-3: eNB local configuration in idle and connected mode for SPID = 254**

| Configuration parameter | Value | Meaning |
|---|---|---|
| GERAN carriers priority | high | The selection priorities for idle and connected mode of all GERAN carriers are higher than the priorities for all UTRAN and E-UTRAN carriers |
| UTRAN carriers priority | medium | The selection priorities for idle and connected mode of all UTRAN carriers are lower than the priorities for all GERAN carriers and higher than the priorities for all E-UTRAN carriers |
| E-UTRAN carriers priority | low | The selection priorities for idle and connected mode of all E-UTRAN carriers are lower than the priorities for all GERAN and UTRAN carriers |



Samsung Exhibit 1015, Page 185 of 198
Samsung Electronics Co., Ltd. v. Asus Technology Licensing Inc.
IPR2024-01217

# Annex J (informative): Carrier Aggregation

This Annex reflects the agreements reached on carrier aggregation that may not necessarily fit in the core of the specification but which needs to be captured in the absence of corresponding details in Stage 3 specifications.

## J.1 Deployment Scenarios

Table J.1-1 shows some of the potential deployment scenarios for CA. In Rel-10, for the uplink, the focus is laid on the support of intra-band carrier aggregations (e.g. scenarios #1, as well as scenarios #2 and #3 when F1 and F2 are in the same band). For the downlink, all scenarios should be supported in Rel-10.

**Table J.1-1: CA Deployment Scenarios (F2 > F1).**

| # | Description | Example |
|---|---|---|
| 1 | F1 and F2 cells are co-located and overlaid, providing nearly the same coverage. Both layers provide sufficient coverage and mobility can be supported on both layers. Likely scenario when F1 and F2 are of the same band, e.g., 2 GHz, 800 MHz, etc. It is expected that aggregation is possible between overlaid F1 and F2 cells. | 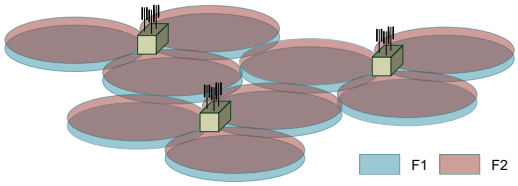  |
| 2 | F1 and F2 cells are co-located and overlaid, but F2 has smaller coverage due to larger path loss. Only F1 provides sufficient coverage and F2 is used to provide throughput. Mobility is performed based on F1 coverage. Likely scenario when F1 and F2 are of different bands, e.g., F1 = {800 MHz, 2 GHz} and F2 = {3.5 GHz}, etc. It is expected that aggregation is possible between overlaid F1 and F2 cells. | 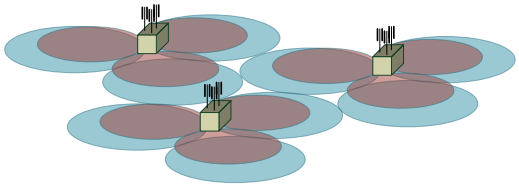 |
| 3 | F1 and F2 cells are co-located but F2 antennas are directed to the cell boundaries of F1 so that cell edge throughput is increased. F1 provides sufficient coverage but F2 potentially has holes, e.g., due to larger path loss. Mobility is based on F1 coverage. Likely scenario when F1 and F2 are of different bands, e.g., F1 = {800 MHz, 2 GHz} and F2 = {3.5 GHz}, etc. It is expected that F1 and F2 cells of the same eNB can be aggregated where coverage overlap. | 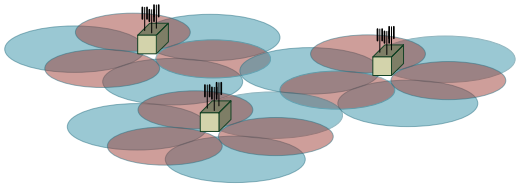 |
| 4 | F1 provides macro coverage and on F2 Remote Radio Heads (RRHs) are used to provide throughput at hot spots. Mobility is performed based on F1 coverage. Likely scenario when F1 and F2 are of different bands, e.g., F1 = {800 MHz, 2 GHz} and F2 = {3.5 GHz}, etc. It is expected that F2 RRHs cells can be aggregated with the underlying F1 macro cells. | 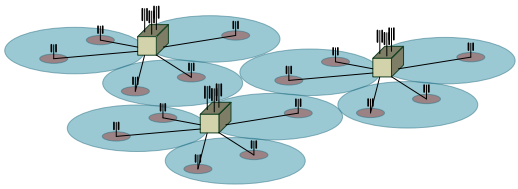 |
| 5 | Similar to scenario #2, but frequency selective repeaters are deployed so that coverage is extended for one of the carrier frequencies. It is expected that F1 and F2 cells of the same eNB can be aggregated where coverage overlap. | 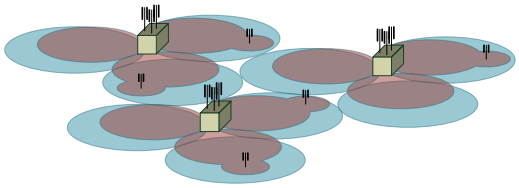 |

The reception timing difference at the physical layer of DL assignments and UL grants for the same TTI but from different serving cells (e.g. depending on number of control symbols, propagation and deployment scenario) does not affect MAC operation.

When CA is deployed frame timing, SFN and TDD-Config are aligned across cells that can be aggregated.



Samsung Exhibit 1015, Page 186 of 198
Samsung Electronics Co., Ltd. v. Asus Technology Licensing Inc.
IPR2024-01217

# J.2 Layer 2 Architecture

The PDCP and RLC protocol of LTE Rel-8/9 also applies to carrier aggregation and allows handling data rate up to 1Gbps.

In MAC, from a UE perspective, the Layer 2 aspects of HARQ are kept Rel-8/9 compliant unless modifications provide significant gains.

The C-Plane architecture of LTE Rel-8/9 also applies to CA.

# J.3 RRC procedures

## J.3.1 System Information

A cell is identified by a unique ECGI and corresponds to the transmission of system information in one CC. Rel-8/9 relevant system information and possible extensions for Rel-10 are delivered on "*backward compatible*" cells. Each cell provides on BCCH the system information which is specific to it.

With regards to the system information reception for the PCell, the Rel-8/9 procedure applies.

When adding an SCell, dedicated RRC signalling is used for sending all required system information of the SCell.

NOTE: this does not include e.g. PRACH resource configurations.

Hence, there is no need for the UE to acquire system information directly from SCells. The system information of an SCell remains valid as long as the SCell is configured. Changes in system information of an SCell are handled through the removal and addition of the SCell. Removal and addition of an SCell can be done with one RRC procedure.

## J.3.2 Connection Control

After RRC connection establishment to the PCell, the reconfiguration, addition and removal of individual SCells can be performed by *RRCConnectionReconfiguration* including *mobilityControlInfo* (i.e. "intra-cell handover"). *RRCConnectionReconfiguration* without *mobilityControlInfo* can also be used for the reconfiguration, addition and removal of individual SCells.

At intra-LTE handover, the *RRCConnectionReconfiguration* with *mobilityControlInfo* (i.e. "handover command") can remove, reconfigure or add individual SCells for usage with the target PCell.

The combination of CA and UL bundling cannot be configured for a UE.

RRC connection re-establishment triggers at the UE include:

1) Failure of the PCell according to same criteria as used for RLF detection in Rel-8/9 (i.e. based on N310/N311/T310);

2) Random access problem in PCell (as in Rel-8/9);

3) Indication from RLC that the maximum number of retransmissions has been reached (as in Rel-8/9).

Upon initiation of the re-establishment procedure, the UE falls back to a non-CA default configuration for *physicalConfigDedicated*, *MAC-MainConfig* and *sps-Config* (i.e. SCells configurations are released). First reconfiguration after the re-establishment can again configure SCells.

With respect to SCells:

- Deactivation and removal of SCell(s) suffering from poor link quality is under eNB control and no autonomous UE deactivation and removal of such serving cells is permitted (with the exception of the timer-based deactivation of as described in subclause 11.2);

- UE never stops transmitting in an SCell autonomously based on downlink SCell quality.



Samsung Exhibit 1015, Page 187 of 198
Samsung Electronics Co., Ltd. v. Asus Technology Licensing Inc.
IPR2024-01217

- Radio link monitoring (i.e. physical layer problem detection based on N310/N311/T310) of DL SCC by the UE is not needed. The eNB can detect poor link quality e.g. from CQI reports and/or existing RRM measurement reports for activated SCells and from existing RRM measurement reports for deactivated SCells.

### J.3.3 Linking between UL and DL

For each cell, SIB2 indicates the carrier frequency of the uplink resources.

NOTE: Several functions apply specifically to the UL resources of the PCell e.g. random access (see 10.1.5). Furthermore, several functions are affected by the linking between uplink and downlink resources e.g. scheduling (see subclause 11.1).

### J.3.4 Measurements

UE sees a CC as any other carrier frequency and a measurement object needs to be set up for a CC in order for the UE to measure it. Inter-frequency neighbour measurements encompass all the carrier frequencies for which no serving cell is configured.

All Rel-8/9 measurement events are applicable for a UE configured with CA:

- At most one serving cell (PCell or SCell) per measurement ID;
- For measurement events A1 and A2 the serving cell of the event is the configured serving cell (PCell or SCell) corresponding to the measurement object (i.e. the eNB may configure separate events A1 and A2 for each serving cell);
- For measurement event A3, A5 and B2, the serving cell used as a reference is the PCell;
- The measurement object linked to an A3 or A5 event can be any frequency and if an SCC is the target object, the corresponding SCell is included in the comparison.

In addition, a new measurement event A6 is introduced: *intra-frequency neighbour becomes offset better than SCell* for which neighbour cells on an SCC are compared to the SCell of that SCC. The relationship between A3 and A6 is exemplified in the figure below:

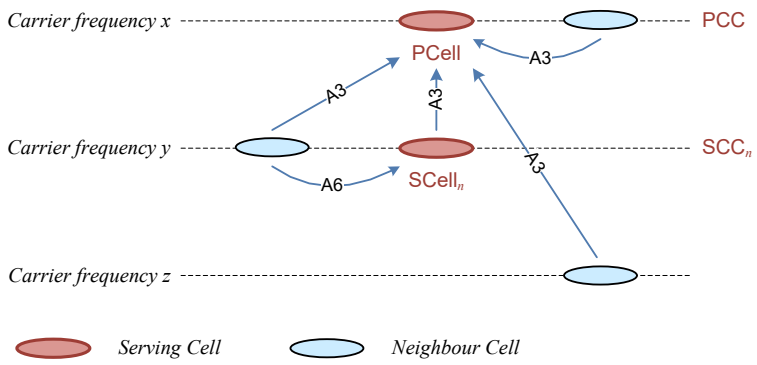


**Figure J.3.4-1: Measurement Events A3 and A6**

Measurements on activated CCs can be done without measurement gaps.

The serving quality threshold (*s-measure*) criteria applies to PCell and controls all non-serving cell measurements i.e. when PCell RSRP, after layer 3 filtering, is higher than *s-measure* all measurements other than those that are only on the PCell or only on an SCell can be disabled.

## J.4 MAC procedures

As in Rel-8/9, there can only be one BSR per transport block but in a TTI, there can be several BSRs:



Samsung Exhibit 1015, Page 188 of 198
Samsung Electronics Co., Ltd. v. Asus Technology Licensing Inc.
IPR2024-01217

- zero or one Regular/Periodic BSR; and
- zero, one or more Padding BSRs of possible different kinds but all following Rel-8/9 rules.

All BSRs transmitted in a TTI always reflect the buffered data left after all MAC PDUs have been built for the TTI. When an LCG is reported in several BSRs of the same TTI, the same value shall be indicated. When more than one serving cell allows a Regular/Periodic BSR to be sent in a TTI, the UE can choose the serving cell in which the Regular/Periodic BSR is sent.

One additional BSR table is introduced for the support of higher data rates. The usage of the new table is explicitly controlled by RRC.

In uplink, the maximum number of HARQ transmissions is configured by the eNB and applies to all serving cells.

## J.5 Idle mode procedures

Idle mode mobility procedures of Rel-8/9 also apply in a network deploying CA. It should be possible for a network to configure only a subset of CCs for idle mode camping.

## J.6 Inter-eNB Mobility

The source eNB selects a target PCell and indicates it in the relevant X2/S1 messages, to ensure backwards compatibility. The target eNB however has the possibility to change the PCell (as in Rel-8/9 for the target cell):

- For X2 handovers, the selected PCell must belong to the set of cells for which a keNB* is provided by the source eNB.
- For S1 handovers, no such restrictions exist.

The target eNB decides which SCells to configure at handover.

# Annex K (informative): Time domain ICIC

This Annex reflects the agreements reached on time domain ICIC that may not necessarily fit in the core of the specification but which needs to be captured in the absence of corresponding details in Stage 3 specifications.

## K.1 Deployment scenarios

Two scenarios have been identified where conventional ICIC techniques are insufficient to overcome co-channel interference, the CSG scenario and the Pico scenario. The identified scenarios are examples of network configurations that are intended to depict the basic concept of time domain ICIC and it should be understood that other network deployment scenarios are also possible.

### K.1.1 CSG scenario

Dominant interference condition may happen when non-member users are in close proximity of a CSG cell. Depending on network deployment and strategy, it may not be possible to divert the users suffering from inter-cell interference to another E-UTRA carrier or other RAT. Time domain ICIC may be used to allow such non-member UEs to remain served by the macro cell on the same frequency layer.

Such interference may be mitigated by the CSG cell utilizing Almost Blank Subframes to protect the corresponding macro cell's subframes from the interference. A non-member UE may be signalled to utilize the protected resources for cell measurements (RRM), radio link monitoring (RLM) and CSI measurements for the serving macro cell, allowing the UE to continue to be served by the macro cell under strong interference from the CSG cell.



Samsung Exhibit 1015, Page 189 of 198
Samsung Electronics Co., Ltd. v. Asus Technology Licensing Inc.
IPR2024-01217

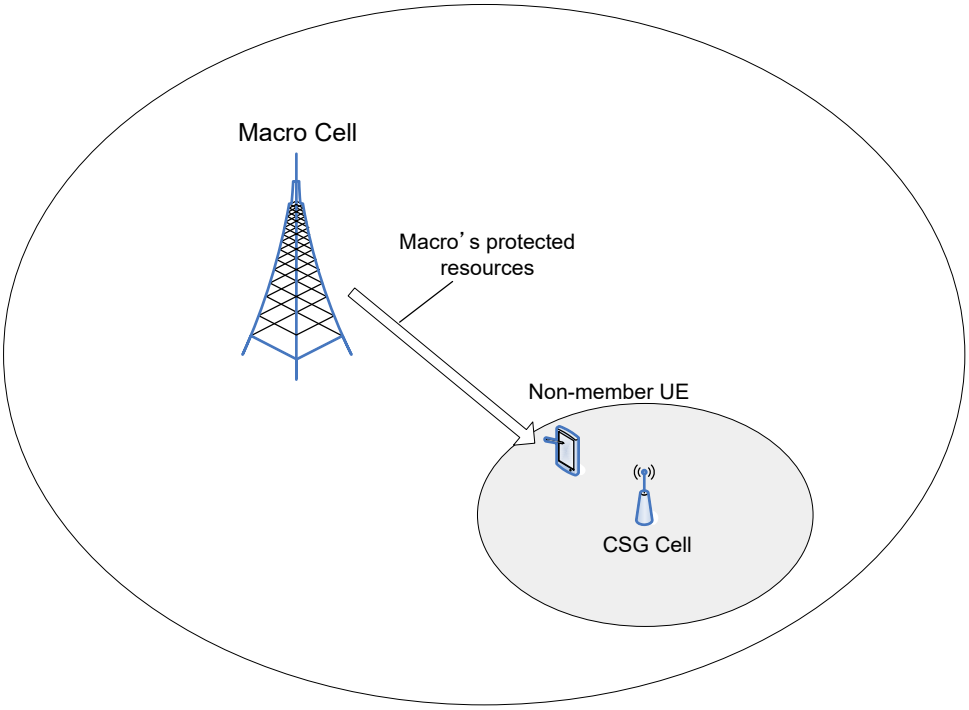


**Figure K.1.1-1: Time domain ICIC: CSG scenario**

In RRC_CONNECTED, the network can find out that the UE is subject to dominant interference from a CSG cell which the UE is not a member of through the existing measurement events (defined in release-8/9), at which point the network may choose to configure the RRM/RLM/CSI measurement resource restriction for the UE. The network may also configure RRM measurement resource restriction for neighbour cells in order to facilitate mobility from the serving macro cell. The network may release the RRM/RLM/CSI measurement resource restriction when it detects that the UE is no longer severely interfered by the CSG cell.

## K.1.2 Pico scenario

Time domain ICIC may be utilized for pico users who served in the edge of the serving pico cell, e.g. for traffic off-loading from a macro cell to a pico cell. Time domain ICIC may be utilized to allow such UEs to remain served by the pico cell on the same frequency layer.

Such interference may be mitigated by the macro cell(s) utilizing Almost Blank Subframes to protect the corresponding pico cell's subframes from the interference. A UE served by a pico cell uses the protected resources for cell measurements (RRM), radio link monitoring (RLM) and CSI measurements for the serving pico cell.



Samsung Exhibit 1015, Page 190 of 198
Samsung Electronics Co., Ltd. v. Asus Technology Licensing Inc.
IPR2024-01217

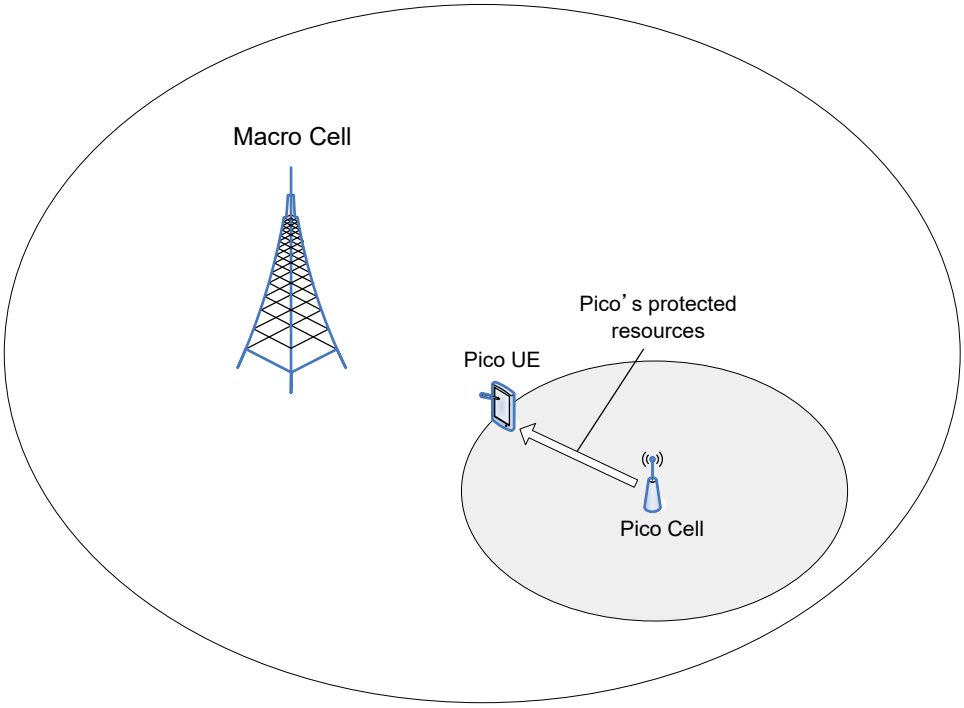


**Figure K.1.2-1: Time domain ICIC: Pico scenario**

For a UE served by a pico cell, the RRM/RLM/CSI measurement resource restriction may allow more accurate measurement of pico cell under strong interference from the macro cell(s). The pico cell may selectively configure the RRM/RLM/CSI measurement resource restriction only for those UEs subject to strong interference from the macro cell(s). Also, for a UE served by a macro cell, the network may configure RRM measurement resource restriction for neighbour cells in order to facilitate mobility from the macro cell to a pico cell.

# Annex L (informative): Relaying

This annex captures agreements regarding relaying, which do not fit into the normative specification text for various reasons. These agreements may be included in the normative Stage-2 specification text when further developed, or in Stage-3 specifications.

## L.1 Deployment scenarios

The focus of relaying in Release 10 is coverage improvement with stationary, single-hop RNs, i.e. RNs directly connected to a non-RN DeNB. More than one RN is supported in a DeNB cell, but the exact number is not specified. There could be deployments with e.g. 30-40 RNs per DeNB.

There are three types of RNs: outband RNs, inband RNs requiring resource partitioning on the Un interface, and inband RNs not requiring resource partitioning on the Un interface.

## L.2 User plane aspects

The baseline for the Un interface is the same MAC mechanisms as in Release 8/9.

There are 8 DRBs on Un, on which data is mapped from UE EPS bearers of UEs connected to the RN based on the UE EPS bearers' QCI. The mapping is configured by OAM and supports many-to-one mapping. When to set up and modify Un bearers is up to the DeNB implementation.

There is no flow control on Un.



Samsung Exhibit 1015, Page 191 of 198
Samsung Electronics Co., Ltd. v. Asus Technology Licensing Inc.
IPR2024-01217

There are no header compression enhancements for Un in Release 10 specifications, beyond header compression/decompression functionality available for UEs.

Semi-persistent scheduling on Un is not supported for RNs requiring a Un subframe configuration.

In case an RN experiences D-SR failure, described in [13] as reaching a preconfigured number of SR attempts and still having an SR pending, it applies the same procedure as a UE.

# L.3 RRC procedures

## L.3.1 General

RN-specific RRC functionality over the Un interface is provided through a new Un reconfiguration procedure, independent of the existing RRC reconfiguration procedure.

## L.3.2 Radio link failure

After radio link failure detection, if the attempt to re-establish an RRC connection fails, the RN goes to RRC_IDLE and tries to recover. The details of the behaviour from RRC_IDLE are left to RN implementation.

It is further assumed that an RN implementation would always try to get the RRC connection up as soon as possible and not remain in RRC_IDLE for longer periods.

# L.4 S1 and X2 proxy functionality

There is only one X2 interface relation between an RN and its DeNB. The DeNB may have X2 connections to other neighbouring eNBs, and will in that case proxy X2 signalling from the RN to the relevant neighbouring eNB(s).

# L.5 Other

Impact to legacy network elements from the introduction of RNs shall be minimized, especially to the core network.

No parameters to configure the RN communication with its UEs are signalled over RRC from the DeNB.

Release 10 specifications will not consider carrier aggregation over Un, although carrier aggregation may be used over Un if possible.



Samsung Exhibit 1015, Page 192 of 198
Samsung Electronics Co., Ltd. v. Asus Technology Licensing Inc.
IPR2024-01217

# Annex M (informative): Change history

| Change history (before approval) | | | | | | | |
|---|---|---|---|---|---|---|---|
| **Date** | **TSG #** | **TSG Doc.** | **CR** | **Rev** | **Subject/Comment** | **Old** | **New** |
| 2006-06 | RAN2 Ad. | R2-062020 | | | First version. | | 0.0.0 |
| 2006-06 | RAN2 Ad. | R2-062026 | | | RLC operation clarified;<br>High priority and low priority SRBs listed in RRC;<br>New section on RRC procedures;<br>Organisation of paging groups explained;<br>New section on Support for self-configuration and self-optimisation. | 0.0.0 | 0.0.1 |
| 2006-06 | RAN2 Ad. | R2-062036 | | | Four possible types of allocation added to section 11;<br>New section for the support for real time IMS services. | 0.0.1 | 0.0.2 |
| 2006-08 | RAN2#54 | R2-062206 | | | Annex B on RRC and MAC control added.<br>Minor editorial clarifications. | 0.0.2 | 0.0.3 |
| 2006-09 | RAN#34 | RP-060603 | | | Section 4 on “Overall Architecture” reorganised;<br>Details on RLC operation included (segmentation, PDU size);<br>Overview of System Information and RACH procedure added. | 0.0.3 | 0.0.4 |
| 2006-10 | RAN2#55 | R2-063012 | | | Ciphering for RRC signalling required in eNB as agreed in SA3;<br>Agreements on RLC operation included: concatenation, discard, polling and status reports;<br>Agreed text proposal in R3-061428 on Self Configuration added to section 19;<br>Context transfer of header compression at UPE relocation listed as FFS.<br>Outline of the RACH procedure described. | 0.0.4 | 0.0.5 |
| 2006-10 | RAN2#55 | R2-063039 | | | Miscellaneous editorial corrections;<br>Agreed text proposal R3-061606 on Current status of E-UTRAN Architecture description added to section 4;<br>Agreed text proposal in R3-061613 on Support for self-configuration and self-optimisation added to section 19.<br>Agreed Physical layer model R2-063031 added to section 5 | 0.0.5 | 0.1.0 |
| 2006-11 | RAN2#56 | R2-063656 | | | Annex C on system information classification added (R2-063064);<br>Integrity protection for the control plane only (SA3 agreement);<br>Agreements on PDCP and RLC PDU structure/handling reflected;<br>Decisions on mobility aspects such as load balancing, handover, radio link failure and random access procedure added;<br>Agreed MBMS deployment scenarios listed together with MBMS transmissions and principles from 25.813;<br>Agreed text proposal R3-061936 on Radio Resource Management added to section 15;<br>Agreed text proposal R3-061940 on RAN Sharing added to section 10;<br>Agreed text proposal R3-061943 on Roaming/Area Restrictions in SAE/LTE added to section 10;<br>Agreed text proposal R3-062008 on S1 C-Plane Functions and procedures added to section 18;<br>Agreed text proposal R3-062011 on X2 interface added to section 19. | 0.1.0 | 0.2.0 |
| 2006-11 | RAN2#56 | R2-063680 | | | Incorporation of RAN1 agreement regarding the mandatory support of 20Mhz DL bandwidth for UEs i.e. removal of sub-clause 16.1;<br>Editorial corrections. | 0.2.0 | 0.3.0 |
| 2006-11 | RAN2#56 | R2-063681 | | | Removal of the SA3 agreement on integrity protection for the user plane;<br>Addition of Annex D on MBMS Transmission;<br>Editorial corrections. | 0.3.0 | 0.3.1 |
| 2006-11 | RAN#34 | RP-060806 | | | Clean version | 0.3.1 | 0.3.1 |
| 2007-01 | RAN2#56 bis | R2-070403 | | | SA3 agreement on integrity protection for the user plane included (R2-070016);<br>Annex E on drivers for mobility control added (R2-070276);<br>Agreements on the details of the random access procedure added in section 10.1.5 (R2-070365);<br>New section on UL rate control included (R2-070410);<br>RRC security principles listed in section 13.1 (R2-070044);<br>Agreement on MAC security added to section 13 (R2-062100);<br>Basis for DL scheduling put in section 11.1;<br>Assumptions on neighbour cell list included in section 10. | 0.3.1 | 0.4.0 |
| 2007-02 | RAN2#57 | R2-070451 | | | Number of bits for RACH in TDD clarified;<br>Miscellaneous editorial corrections. | 0.4.0 | 0.5.0 |



Samsung Exhibit 1015, Page 193 of 198
Samsung Electronics Co., Ltd. v. Asus Technology Licensing Inc.
IPR2024-01217

| | | | | | | | |
|---|---|---|---|---|---|---|---|
| 2007-02 | RAN2#57 | R2-071073 | | | Architecture updated according to R3-070397;<br>Agreements from R2-070802. | 0.5.0 | 0.6.0 |
| 2007-02 | RAN2#57 | R2-071120 | | | RACH model for initial access described;<br>Mapping of the BCCH and System Information principles added;<br>Agreements on DRX included in section 12. | 0.6.0 | 0.7.0 |
| 2007-02 | RAN2#57 | R2-071122 | | | Miscellaneous clarifications | 0.7.0 | 0.7.1 |
| 2007-02 | RAN2#57 | R2-071123 | | | CCCH in DL listed as FFS;<br>SAE Gateway ID removed from section 8.2;<br>PDCP for the control plane listed as FFS in section 4.3.2;<br>Agreements on intra-E-UTRAN handover procedure included in section 10.1.2 (R3-062020). | 0.7.1 | 0.8.0 |
| 2007-03 | RAN2#57 | R2-071124 | | | Agreement on Radio Access Network Sharing (R2-070551) added to section 10.1.7;<br>Overview of the physical layer (R1-071251) included to section 5;<br>Agreed text proposals on *S1 interface* included in Section 19 (R3-070289, R3-070402);<br>Agreed text proposal R3-070409 on *network sharing* included in section 10.1.7;<br>Agreed text proposal R3-070411 on *Area Restrictions* included in section 10.4;<br>Agreed text proposal R3-070448 on *Assembly of Intra-E-UTRAN handover command* included in section 10.1.2.1.1;<br>Agreed text proposal R3-070451 on *inter RAT HO principles* included in section 10.2.2;<br>Agreed text proposal R3-070472 on *Addressing on S1-C and X2-C* added to sections 19.2 and 20.2;<br>Agreed text proposal R3-070494 on *Initial Context Setup Function and Procedure* added to section 19;<br>Agreed text proposal R3-070495 on *S1 Paging function and procedure* added to section 19<br>Figures for mapping between channels split into Uplink and Downlink parts in section 5.3.1 and 6.1.3. | 0.8.0 | 0.9.0 |
| 2007-03 | RAN#35 | RP-070136 | | | S1-U and S1-MME used throughout the document;<br>aGW replaced by EPC when still used;<br>Clean version for information | 0.9.0 | 1.0.0 |

| Change history (after approval) | | | | | | | |
|---|---|---|---|---|---|---|---|
| **Date** | **TSG #** | **TSG Doc.** | **CR** | **Rev** | **Subject/Comment** | **Old** | **New** |
| 2007-03 | RP-35 | RP-070136 | - | | Approved at TSG-RAN #35 and placed under Change Control | 1.0.0 | 8.0.0 |
| 2007-06 | RP-36 | RP-070399 | 0001 | 1 | Changes to management-, handover-, paging- and NAS functions, node- synchronization, X2 UP protocol stack, X2 inter cell load management, IP fragmentation, intra-LTE HO, and TA relation to cells in eNB | 8.0.0 | 8.1.0 |
| | RP-36 | RP-070494 | 0002 | 1 | Update on Mobility, Security, Random Access Procedure, etc… | 8.0.0 | 8.1.0 |
| | RP-36 | RP-070399 | 0003 | - | Update on MBMS | 8.0.0 | 8.1.0 |
| 2007-09 | RP-37 | RP-070637 | 0004 | 1 | Update on Security, System Information, Mobility, MBMS and DRX | 8.1.0 | 8.2.0 |
| | RP-37 | RP-070637 | 0005 | 1 | Correction of synchronization, handover, trace, eMBMS architecture, and S1 common functions and procedures | 8.1.0 | 8.2.0 |
| 2007-12 | RP-38 | RP-070913 | 0006 | 1 | Clean up and update on security, scheduling, mobility, MBMS and DRX | 8.2.0 | 8.3.0 |
| | RP-38 | RP-070913 | 0007 | - | Mobility management | 8.2.0 | 8.3.0 |
| | RP-38 | RP-070913 | 0008 | - | Correction of eMBMS functions and NAS handling during X2 handover | 8.2.0 | 8.3.0 |
| | RP-38 | RP-071048 | 0009 | - | Update of Stage 2 to incorporate Interworking with cdma2000 | 8.2.0 | 8.3.0 |
| 2008-03 | RP-39 | RP-080192 | 0010 | - | CR to 36.300 on NAS States, Persistent Scheduling, C-RNTI Allocation at Handover… | 8.3.0 | 8.4.0 |
| | RP-39 | RP-080192 | 0011 | - | RAN3 corrections to 36.300 (CR0011) | 8.3.0 | 8.4.0 |
| 2008-05 | RP-40 | RP-080406 | 0012 | 1 | Introduction of optimized FS2 for TDD | 8.4.0 | 8.5.0 |
| | RP-40 | RP-080406 | 0013 | 1 | System Information, Mobilty, QoS and miscellaneous updates | 8.4.0 | 8.5.0 |
| | RP-40 | RP-080406 | 0014 | - | Updates to Stage 2 based on Stage 3 progress on CDMA inter-working | 8.4.0 | 8.5.0 |
| | RP-40 | RP-080406 | 0016 | 1 | CR 0016r1 to 36.300 on CSG mobility performance guidelines | 8.4.0 | 8.5.0 |
| | RP-40 | RP-080406 | 0017 | - | CR to 36.300 on AS-NAS interaction | 8.4.0 | 8.5.0 |
| | RP-40 | RP-080420 | 0018 | 1 | RAN3 agreed changes to TS 36.300 | 8.4.0 | 8.5.0 |
| | RP-40 | RP-080463 | 0019 | - | Network Interface for ETWS support based on CBS solution | 8.4.0 | 8.5.0 |
| 2008-09 | RP-41 | RP-080688 | 0020 | - | Correction for Rename of L1/L2 control channel | 8.5.0 | 8.6.0 |
| | RP-41 | RP-080688 | 0021 | - | CR to 36.300 on Paging Channel Description | 8.5.0 | 8.6.0 |
| | RP-41 | RP-080688 | 0022 | - | Proposed updates to Stage 2 for CDMA2000 handover | 8.5.0 | 8.6.0 |
| | RP-41 | RP-080688 | 0023 | - | CR to 36.300 on Semi-Persistent Scheduling | 8.5.0 | 8.6.0 |
| | RP-41 | RP-080688 | 0024 | - | CR to 36.300 on System Information | 8.5.0 | 8.6.0 |
| | RP-41 | RP-080688 | 0026 | - | Clarification of PDCCH description | 8.5.0 | 8.6.0 |



Samsung Exhibit 1015, Page 194 of 198
Samsung Electronics Co., Ltd. v. Asus Technology Licensing Inc.
IPR2024-01217

| | | | | | | | |
|---|---|---|---|---|---|---|---|
| | RP-41 | RP-080688 | 0027 | - | Removal of DRX interval threshold in 36.300 | 8.5.0 | 8.6.0 |
| | RP-41 | RP-080688 | 0028 | - | CR on Randon Access procedure | 8.5.0 | 8.6.0 |
| | RP-41 | RP-080688 | 0032 | 1 | Transport of NAS messages by AS during Handover | 8.5.0 | 8.6.0 |
| | RP-41 | RP-080688 | 0034 | - | CR to 36.300 capturing home eNB conclusions of RAN2 #63 | 8.5.0 | 8.6.0 |
| | RP-41 | RP-080688 | 0035 | - | Changes to TS36.300 agreed in RAN3#61 | 8.5.0 | 8.6.0 |
| 2008-12 | RP-42 | RP-081016 | 0036 | - | CR0036 to 36.300 [Rel-8] on Contention Resolution | 8.6.0 | 8.7.0 |
| | RP-42 | RP-081016 | 0037 | - | CR0037 to 36.300 [Rel-8] on ETWS SIB | 8.6.0 | 8.7.0 |
| | RP-42 | RP-081016 | 0038 | - | Alignment of 36.300 with stage 3 on 1xRTT CSfallback | 8.6.0 | 8.7.0 |
| | RP-42 | RP-081016 | 0039 | 1 | Data handling in UE during Inter-RAT mobility | 8.6.0 | 8.7.0 |
| | RP-42 | RP-081016 | 0040 | - | Removing of end time for dedicated preamble | 8.6.0 | 8.7.0 |
| | RP-42 | RP-081016 | 0041 | - | Remove the Note about RA preamble for FS2 | 8.6.0 | 8.7.0 |
| | RP-42 | RP-081016 | 0042 | - | Clarification of AS-NAS concatenation - Stage 2 | 8.6.0 | 8.7.0 |
| | RP-42 | RP-081016 | 0044 | - | CR 0044 to 36.300 on Miscellaneous corrections | 8.6.0 | 8.7.0 |
| | RP-42 | RP-081016 | 0046 | 1 | Proposed CR to 36.300 [Rel-8] on Security Overview | 8.6.0 | 8.7.0 |
| | RP-42 | RP-081016 | 0047 | - | Proposed CR to 36.300 [Rel-8] on MBMS | 8.6.0 | 8.7.0 |
| | RP-42 | RP-081016 | 0050 | - | PDCP reordering function removal | 8.6.0 | 8.7.0 |
| | RP-42 | RP-081016 | 0052 | - | Align Number of Cell Identities | 8.6.0 | 8.7.0 |
| | RP-42 | RP-081016 | 0055 | 2 | Periodic Updates In Connected Mode DRX | 8.6.0 | 8.7.0 |
| | RP-42 | RP-081016 | 0056 | - | Cleaning of the figure w.r.t Handover Control Plane - CR to TS 36.300 | 8.6.0 | 8.7.0 |
| | RP-42 | RP-081016 | 0057 | - | CR to 36.300 to capture measurement model for EUTRAN | 8.6.0 | 8.7.0 |
| | RP-42 | RP-081016 | 0058 | 2 | CSG Mobility Updates from RAN2 #63bis and RAN2 #64 | 8.6.0 | 8.7.0 |
| | RP-42 | RP-081016 | 0059 | - | CR to 36.300 on Correction of the Description of FS2 | 8.6.0 | 8.7.0 |
| | RP-42 | RP-081016 | 0060 | - | Changes to TS36.300 agreed in RAN3#61bis and RAN3#62 | 8.6.0 | 8.7.0 |
| 2009-03 | RP-43 | RP-090123 | 0061 | 1 | CR to 36.300 - Clarification on RAPreambles | 8.7.0 | 8.8.0 |
| | RP-43 | RP-090123 | 0062 | - | CR to 36.300 on E-UTRAN Identities | 8.7.0 | 8.8.0 |
| | RP-43 | RP-090123 | 0063 | 1 | CR to 36.300 - MME in temporary UE identity | 8.7.0 | 8.8.0 |
| | RP-43 | RP-090123 | 0064 | - | UE with SIM in EUTRA | 8.7.0 | 8.8.0 |
| | RP-43 | RP-090123 | 0065 | - | Collected 36.300 corrections | 8.7.0 | 8.8.0 |
| | RP-43 | RP-090123 | 0066 | - | CR for 36.300 on Local NACK feature | 8.7.0 | 8.8.0 |
| | RP-43 | RP-090123 | 0067 | - | CR for allowed CSG list | 8.7.0 | 8.8.0 |
| | RP-43 | RP-090123 | 0068 | 3 | UE capability transfer upon handover to E-UTRA | 8.7.0 | 8.8.0 |
| | RP-43 | RP-090123 | 0069 | 1 | Inter-RAT ANR Function for CDMA2000 | 8.7.0 | 8.8.0 |
| | RP-43 | RP-090123 | 0070 | - | Corrections to Handover Scenario | 8.7.0 | 8.8.0 |
| | RP-43 | RP-090123 | 0071 | - | Corrections to Security for alignment with 33.401 | 8.7.0 | 8.8.0 |
| | RP-43 | RP-090134 | 0072 | - | Establishment of X2 Interface to HeNB GW | 8.7.0 | 8.8.0 |
| | RP-43 | RP-090134 | 0073 | - | Clarification of PLMN id to be used in E-CGI and Global eNB ID | 8.7.0 | 8.8.0 |
| | RP-43 | RP-090134 | 0074 | - | Specification of UL PDUs handling | 8.7.0 | 8.8.0 |
| | RP-43 | RP-090134 | 0075 | - | Update of AMBR Concept with UE-AMBR and APN-AMBR | 8.7.0 | 8.8.0 |
| | RP-43 | RP-090134 | 0076 | - | Aligning E-RAB release request procedure with E-RAB release indication in 36.413 | 8.7.0 | 8.8.0 |
| | RP-43 | RP-090134 | 0077 | - | Stage 2 CR on S1 CDMA2000 Tunnelling Function | 8.7.0 | 8.8.0 |
| | RP-43 | RP-090134 | 0078 | - | Finalisation of dynamic configuration of the X2 and S1 interfaces | 8.7.0 | 8.8.0 |
| | RP-43 | RP-090134 | 0079 | - | Addition and correction of X2 procedures in stage 2 specification | 8.7.0 | 8.8.0 |
| | RP-43 | RP-090134 | 0080 | - | NNSF Description | 8.7.0 | 8.8.0 |
| | RP-43 | RP-090134 | 0081 | - | Collection of minor corrections to 36.300 agreed by RAN3 | 8.7.0 | 8.8.0 |
| | RP-43 | RP-090134 | 0082 | - | Data Forwarding Resource Release | 8.7.0 | 8.8.0 |
| | RP-43 | RP-090134 | 0083 | - | Support of Paging Optimisation for CSG cells | 8.7.0 | 8.8.0 |
| | RP-43 | RP-090134 | 0084 | - | Handling of trace session and location reporting during UE context release | 8.7.0 | 8.8.0 |
| 2009-06 | RP-44 | RP-090507 | 0085 | - | Proposed CR to 36.300 on RLC status report triggers | 8.8.0 | 8.9.0 |
| | RP-44 | RP-090507 | 0086 | 2 | Updates on UE capability transfer and container handling for E-UTRA | 8.8.0 | 8.9.0 |
| | RP-44 | RP-090507 | 0089 | - | Proposed CR to 36.300 Rel-8 on FFS and outdated statements | 8.8.0 | 8.9.0 |
| | RP-44 | RP-090508 | 0096 | - | Removal of no longer necessary notes | 8.8.0 | 8.9.0 |
| | RP-44 | RP-090508 | 0097 | - | Introduction of support for Cell traffic trace | 8.8.0 | 8.9.0 |
| | RP-44 | RP-090508 | 0098 | - | Correction the text about the UE History Information | 8.8.0 | 8.9.0 |
| | RP-44 | RP-090538 | 0102 | - | Configuration transfer | 8.8.0 | 8.9.0 |
| 2009-06 | RP-44 | - | - | - | TS 36.300 v9.0.0 was created based on TS 36.300 v8.9.0 | 8.9.0 | 9.0.0 |
| | RP-44 | RP-090523 | 0087 | 1 | MBMS baseline for Rel-9 LTE | 8.8.0 | 9.0.0 |
| | RP-44 | RP-090524 | 0088 | - | Idle mode requirements to support Hybrid Cells | 8.8.0 | 9.0.0 |
| | RP-44 | RP-090523 | 0099 | - | eMBMS Stage 2 description | 8.8.0 | 9.0.0 |
| | RP-44 | RP-090523 | 0100 | - | CR for eMBMS Deployment Alternatives in 36.300 | 8.8.0 | 9.0.0 |
| | RP-44 | RP-090534 | 0101 | 1 | QoS support for Hybrid CSG cells | 8.8.0 | 9.0.0 |
| | RP-44 | RP-090537 | 0103 | - | TAI based handover routing for HeNBs | 8.8.0 | 9.0.0 |
| 2009-09 | RP-45 | RP-090906 | 0106 | 1 | Correction regarding SRVCC | 9.0.0 | 9.1.0 |
| | RP-45 | RP-090906 | 0108 | - | Clarification on UE behaviour in case of L2 buffer overflow | 9.0.0 | 9.1.0 |
| | RP-45 | RP-090926 | 0112 | 1 | IMS Emergency Call | 9.0.0 | 9.1.0 |
| | RP-45 | RP-090927 | 0113 | - | Introduction of position cause for dedicated PRACH allocation | 9.0.0 | 9.1.0 |
| | RP-45 | RP-090929 | 0114 | - | Adding Support for Explicit Congestion Notification | 9.0.0 | 9.1.0 |



Samsung Exhibit 1015, Page 195 of 198
Samsung Electronics Co., Ltd. v. Asus Technology Licensing Inc.
IPR2024-01217

| | | | | | | | |
|---|---|---|---|---|---|---|---|
| | RP-45 | RP-090930 | 0115 | 2 | Agreements on inbound mobility to CSG | 9.0.0 | 9.1.0 |
| | RP-45 | RP-090934 | 0116 | - | Alignment to the stage3 specification | 9.0.0 | 9.1.0 |
| | RP-45 | RP-090928 | 0117 | 2 | MBMS agreements RAN2#66bis and RAN2#67 | 9.0.0 | 9.1.0 |
| | RP-45 | RP-090934 | 0123 | - | CR to 36.300 for Stage 2 alignment of Enhanced CSFB to 1xRTT | 9.0.0 | 9.1.0 |
| | RP-45 | RP-090906 | 0129 | - | Corrections to ECGI Specification | 9.0.0 | 9.1.0 |
| | RP-45 | RP-090932 | 0130 | - | Support for Mobility Robustness Optimization SON Function | 9.0.0 | 9.1.0 |
| | RP-45 | RP-090919 | 0132 | - | Addition of missing Resource Status Reporting procedures | 9.0.0 | 9.1.0 |
| | RP-45 | RP-090931 | 0133 | - | HeNB Access Mode Sginalling | 9.0.0 | 9.1.0 |
| | RP-45 | RP-090931 | 0134 | - | QoS principles in Hybrid access cell | 9.0.0 | 9.1.0 |
| | RP-45 | RP-090933 | 0136 | - | Introduction of PWS (which includes ETWS and CMAS) delivery function | 9.0.0 | 9.1.0 |
| | RP-45 | RP-090928 | 0137 | 1 | Dynamic service multiplexing | 9.0.0 | 9.1.0 |
| | RP-45 | RP-090928 | 0138 | - | MBMS SYNC configuration | 9.0.0 | 9.1.0 |
| | RP-45 | RP-090932 | 0140 | - | Adding Mobility Load Balancing (MLB) use case to the SON section | 9.0.0 | 9.1.0 |
| | RP-45 | RP-090919 | 0141 | - | Handling of Radio Link Failure and S1 UE Context Release Request | 9.0.0 | 9.1.0 |
| | RP-45 | RP-090919 | 0142 | - | Introduction of informative text on Initial Context Setup failure | 9.0.0 | 9.1.0 |
| | RP-45 | RP-090931 | 0143 | - | Support for paging optimization with CSG membership changes | 9.0.0 | 9.1.0 |
| 2009-12 | RP-46 | RP-091314 | 0145 | - | CR on the usage of Transparent Mode MAC | 9.1.0 | 9.2.0 |
| | RP-46 | RP-091343 | 0146 | 2 | Capturing HeNB inbound mobility agreements | 9.1.0 | 9.2.0 |
| | RP-46 | RP-091331 | 0148 | 1 | ETWS correction to 36.300 | 9.1.0 | 9.2.0 |
| | RP-46 | RP-091314 | 0150 | - | Inclusion of INTER RAT HANDOVER INFO at HO from UTRAN to GERAN | 9.1.0 | 9.2.0 |
| | RP-46 | RP-091341 | 0151 | 1 | MBMS Agreements | 9.1.0 | 9.2.0 |
| | RP-46 | RP-091346 | 0152 | - | Measurement Overview | 9.1.0 | 9.2.0 |
| | RP-46 | RP-091345 | 0153 | 1 | High level feature description of CMAS | 9.1.0 | 9.2.0 |
| | RP-46 | RP-091344 | 0154 | 1 | RACH optimization in 36.300 | 9.1.0 | 9.2.0 |
| | RP-46 | RP-091314 | 0156 | 1 | Correction on the precondition for cell reselection to HRPD | 9.1.0 | 9.2.0 |
| | RP-46 | RP-091346 | 0158 | 1 | Miscellaneous corrections to 36.300 (Rel-9) | 9.1.0 | 9.2.0 |
| | RP-46 | RP-091343 | 0162 | - | Renaming Allowed CSG List (36.300, Rel-9) | 9.1.0 | 9.2.0 |
| | RP-46 | RP-091344 | 0165 | - | The scope and method for HO negotiations | 9.1.0 | 9.2.0 |
| | RP-46 | RP-091151 | 0166 | 1 | Access control for handover procedures to LTE CSG/hybrid cells | 9.1.0 | 9.2.0 |
| | RP-46 | RP-091341 | 0167 | - | Admission Control in MCE | 9.1.0 | 9.2.0 |
| | RP-46 | RP-091341 | 0168 | - | Clarification on SFN Synchronization | 9.1.0 | 9.2.0 |
| | RP-46 | RP-091341 | 0169 | 1 | BMSC-MCE signaling synchronization in session start message | 9.1.0 | 9.2.0 |
| | RP-46 | RP-091341 | 0170 | - | CR on multiplexing decision and DSP length | 9.1.0 | 9.2.0 |
| | RP-46 | RP-091237 | 0171 | 1 | M3AP stage 2 | 9.1.0 | 9.2.0 |
| | RP-46 | RP-091150 | 0172 | 1 | M2AP stage 2 | 9.1.0 | 9.2.0 |
| | RP-46 | RP-091340 | 0173 | - | CR for Transportation support for LPPa | 9.1.0 | 9.2.0 |
| | RP-46 | RP-091341 | 0174 | - | Introduction of MBMS for LTE: C- and U-Plane synchronisation principles | 9.1.0 | 9.2.0 |
| | RP-46 | RP-091341 | 0175 | - | CR on Mechanism for Consecutive Packet Loss in 36.300 | 9.1.0 | 9.2.0 |
| | RP-46 | RP-091332 | 0177 | - | Overload reduction | 9.1.0 | 9.2.0 |
| | RP-46 | RP-091344 | 0178 | - | The scope and method for HO negotiations | 9.1.0 | 9.2.0 |
| | RP-46 | RP-091344 | 0179 | - | Introduction of MRO procedures in stage 2 | 9.1.0 | 9.2.0 |
| | RP-46 | RP-091341 | 0180 | 1 | MCE to MME session start response | 9.1.0 | 9.2.0 |
| | RP-46 | RP-091332 | 0182 | - | In order delivery of the multiple NAS PDUs | 9.1.0 | 9.2.0 |
| 2010-03 | RP-47 | RP-100305 | 0183 | - | Correction regarding support of multiple MBSFN areas | 9.2.0 | 9.3.0 |
| | RP-47 | RP-100305 | 0184 | 1 | Correction to MBMS terminology | 9.2.0 | 9.3.0 |
| | RP-47 | RP-100305 | 0185 | - | Corrections on eNB muting MBSFN transmission | 9.2.0 | 9.3.0 |
| | RP-47 | RP-100305 | 0186 | - | Corrections to TS 36.300 on MBMS | 9.2.0 | 9.3.0 |
| | RP-47 | RP-100306 | 0187 | - | CR capturing HeNB inbound mobility agreeements | 9.2.0 | 9.3.0 |
| | RP-47 | RP-100308 | 0188 | - | Remove FFSs from RAN2 specifications | 9.2.0 | 9.3.0 |
| | RP-47 | RP-100296 | 0189 | - | SIM based access for Emergency calls in LTE | 9.2.0 | 9.3.0 |
| | RP-47 | RP-100304 | 0191 | - | RA for Positioning | 9.2.0 | 9.3.0 |
| | RP-47 | RP-100305 | 0192 | - | Corrections to TS36.300 on MBMS | 9.2.0 | 9.3.0 |
| | RP-47 | RP-100308 | 0196 | 1 | Stage 2 update for Full Configuration Handover for handling earlier eNB releases | 9.2.0 | 9.3.0 |
| | RP-47 | RP-100296 | 0197 | - | Handling Kasme mismatch for IMS Emergency calls | 9.2.0 | 9.3.0 |
| | RP-47 | RP-100308 | 0199 | - | Correction to MTU endpoint | 9.2.0 | 9.3.0 |
| | RP-47 | RP-100307 | 0200 | - | Stage 2 correction of Load Reporting for MLB | 9.2.0 | 9.3.0 |
| | RP-47 | RP-100307 | 0201 | - | CR for Allowed Range in Negotiation | 9.2.0 | 9.3.0 |
| | RP-47 | RP-100307 | 0202 | - | Clarification of definitions of HO failure cases | 9.2.0 | 9.3.0 |
| | RP-47 | RP-100307 | 0203 | - | Clarification on the usage of the mechanism to transfer IRAT MLB information | 9.2.0 | 9.3.0 |
| | RP-47 | RP-100305 | 0204 | - | MBMS Session Update in M3AP stage 2 | 9.2.0 | 9.3.0 |
| | RP-47 | RP-100305 | 0205 | - | Correction on radio bearer configuration | 9.2.0 | 9.3.0 |
| | RP-47 | RP-100305 | 0206 | - | Correction to the MSAP occasion implied by SYNC timestamp | 9.2.0 | 9.3.0 |



Samsung Exhibit 1015, Page 196 of 198
Samsung Electronics Co., Ltd. v. Asus Technology Licensing Inc.
IPR2024-01217

| | | | | | | | |
|---|---|---|---|---|---|---|---|
| | RP-47 | RP-100305 | 0207 | - | MCCH related BCCH content | 9.2.0 | 9.3.0 |
| | RP-47 | RP-100305 | 0208 | - | MCCH update synchronization | 9.2.0 | 9.3.0 |
| | RP-47 | RP-100305 | 0209 | - | MBMS Session Update in M2AP stage 2 | 9.2.0 | 9.3.0 |
| | RP-47 | RP-100305 | 0210 | - | CR for MBMS User Data flow synchronisation in 36.300 | 9.2.0 | 9.3.0 |
| | RP-47 | RP-100305 | 0211 | - | MBMS User Data flow synchronisation | 9.2.0 | 9.3.0 |
| | RP-47 | RP-100305 | 0212 | - | Packet dropping | 9.2.0 | 9.3.0 |
| | RP-47 | RP-100305 | 0213 | - | SYNC sequence duration configuration in MCE | 9.2.0 | 9.3.0 |
| | RP-47 | RP-100305 | 0214 | - | Adding the description of simultaneously change of SIB13 and MCCH | 9.2.0 | 9.3.0 |
| | RP-47 | RP-100305 | 0215 | - | Addition u-plane protocol stack for M1 | 9.2.0 | 9.3.0 |
| | RP-47 | RP-100295 | 0217 | - | Queue concurrent NAS messages if necessary for in seq delivery | 9.2.0 | 9.3.0 |
| | RP-47 | RP-100295 | 0219 | - | Support of X2 Inter-PLMN HO | 9.2.0 | 9.3.0 |
| | RP-47 | RP-100300 | 0220 | - | Clarifications on CSG process definition and mobility procedures | 9.2.0 | 9.3.0 |
| | RP-47 | RP-100300 | 0221 | - | Corrections of HeNB | 9.2.0 | 9.3.0 |
| | RP-47 | RP-100300 | 0222 | - | CSG expiry Handling | 9.2.0 | 9.3.0 |
| | RP-47 | RP-100295 | 0224 | - | eNB/MME Status Transfer procedure | 9.2.0 | 9.3.0 |
| | RP-47 | RP-100308 | 0225 | - | SPID implementation guidelines | 9.2.0 | 9.3.0 |
| | RP-47 | RP-100308 | 0226 | - | Handling of handover restriction for emergency call | 9.2.0 | 9.3.0 |
| | RP-47 | RP-100300 | 0227 | - | Some corrections for HeNB | 9.2.0 | 9.3.0 |
| 2010-06 | RP-48 | RP-100556 | 0228 | - | CR to 36.300 for CSFB to 1xRTT | 9.3.0 | 9.4.0 |
| | RP-48 | RP-100554 | 0229 | 1 | Proposed CR to 36.322 on RLC re-establishment for MBMS | 9.3.0 | 9.4.0 |
| | RP-48 | RP-100551 | 0231 | - | Stage2 correction for HeNB inbound handover | 9.3.0 | 9.4.0 |
| | RP-48 | RP-100554 | 0235 | - | CR to 36.300 on MBMS terminology | 9.3.0 | 9.4.0 |
| | RP-48 | RP-100570 | 0238 | 1 | Add MOBILITY SETTINGS CHANGE Procedure to X2-CP Procedure section | 9.3.0 | 9.4.0 |
| | RP-48 | RP-100556 | 0239 | - | Introduction of trace functions and procedures in S1 sections of 36.300 (contact: Motorola) | 9.3.0 | 9.4.0 |
| | RP-48 | RP-100554 | 0240 | - | Correction of Synchronization Sequence (contact: Alcatel-Lucent Shanghai Bell, Alcatel-Lucent) | 9.3.0 | 9.4.0 |
| | RP-48 | RP-100552 | 0241 | - | Clarification of CSG / Hybrid cell definitions (contact: Ericsson) | 9.3.0 | 9.4.0 |
| | RP-48 | RP-100555 | 0242 | - | SON stage 2 clean up (contact: Samsung, Nokia Siemens Networks) | 9.3.0 | 9.4.0 |
| | RP-48 | RP-100555 | 0243 | - | Updating Stage-2 on R9 Automatic Neighbour Relation Function (contact: ETRI, Samsung) | 9.3.0 | 9.4.0 |
| | RP-48 | RP-100554 | 0244 | 1 | Adding of description in EUTRAN for IP Multicast (contact: NEC) | 9.3.0 | 9.4.0 |
| | RP-48 | RP-100556 | 0245 | - | Correction of trace failure description in Stage 2 (contact: NEC, Motorola, Huawei) | 9.3.0 | 9.4.0 |
| | RP-48 | RP-100554 | 0246 | - | Correction of packet dropping (contact: Alcatel-Lucent Shanghai Bell, Alcatel-Lucent) | 9.3.0 | 9.4.0 |
| | RP-48 | RP-100552 | 0247 | - | Clarification of paging optimization (contact: Qualcomm) | 9.3.0 | 9.4.0 |
| 2010-06 | RP-48 | - | - | - | TS 36.300 v10.0.0 was created based on TS 36.300 v9.4.0 | 9.4.0 | 10.0.0 |
| | RP-48 | RP-100561 | 0230 | 3 | Stage 2 description of Carrier Aggregation | 9.3.0 | 10.0.0 |
| | RP-48 | RP-100562 | 0232 | 1 | Stage-2 description of relaying into 36.300 | 9.3.0 | 10.0.0 |
| 2010-09 | RP-49 | RP-100865 | 0248 | 4 | Corrections and new Agreements on Carrier Aggregation | 10.0.0 | 10.1.0 |
| | RP-49 | RP-100866 | 0249 | 1 | 36.300 CR for stage 2 RAN #70bis and #71 agreements of relaying | 10.0.0 | 10.1.0 |
| | RP-49 | RP-100866 | 0255 | - | Start-up procedure for relays | 10.0.0 | 10.1.0 |
| | RP-49 | RP-100851 | 0257 | - | Keeping neighbouring eNBs up-to-date with complete list of served cells (contact: NSN) | 10.0.0 | 10.1.0 |
| | RP-49 | RP-100851 | 0259 | - | Description of Energy Saving mechanisms (contact: Ericsson) | 10.0.0 | 10.1.0 |
| | RP-49 | RP-100866 | 0260 | - | Handover request routing toward RN (contact: Huawei) | 10.0.0 | 10.1.0 |
| | RP-49 | RP-100853 | 0262 | - | MBMS Session Update procedure (contact: Motorola) | 10.0.0 | 10.1.0 |
| | RP-49 | RP-100860 | 0264 | - | CS Fallback Indication and Handover Restriction List (contact: NEC) | 10.0.0 | 10.1.0 |
| | RP-49 | RP-100866 | 0265 | - | X2-AP non UE dedicated messages handling (contact: Huawei) | 10.0.0 | 10.1.0 |
| | RP-49 | RP-100866 | 0266 | - | Detach procedure for relays (contact: NTT DOCOMO) | 10.0.0 | 10.1.0 |
| | RP-49 | RP-100866 | 0267 | 1 | RN and DeNB OAMs should be able to exchange info (contact: Ericsson) | 10.0.0 | 10.1.0 |
| | RP-49 | RP-100882 | 0268 | - | CSFB summary | 10.0.0 | 10.1.0 |
| 2010-12 | RP-50 | RP-101226 | 0269 | 2 | Corrections and new agreements on Carrier Aggregation | 10.1.0 | 10.2.0 |
| | RP-50 | RP-101206 | 0271 | - | 36300_CRxxx_Handover for Hybrid Cells | 10.1.0 | 10.2.0 |
| | RP-50 | RP-101208 | 0273 | - | Correction on MAC padding on MCH | 10.1.0 | 10.2.0 |
| | RP-50 | RP-101228 | 0274 | 3 | Additions and corrections to relaying description | 10.1.0 | 10.2.0 |
| | RP-50 | RP-101231 | 0275 | 1 | LTE - Stage 2 agreements on MBMS enhancement | 10.1.0 | 10.2.0 |
| | RP-50 | RP-101214 | 0276 | 1 | CR to 36.300 adding e1xCSFB support for dual Rx/Tx UE | 10.1.0 | 10.2.0 |
| | RP-50 | RP-101214 | 0277 | - | Editorial Clean-Up | 10.1.0 | 10.2.0 |
| | RP-50 | RP-101229 | 0278 | 1 | Introduction of enhanced ICIC | 10.1.0 | 10.2.0 |
| | RP-50 | RP-101214 | 0285 | 2 | Setting of Maximum Bit Rate (MBR) to be greater than the Guaranteed Bit Rate (GBR) over E-UTRA: MBR enforcement at eNB side. | 10.1.0 | 10.2.0 |



Samsung Exhibit 1015, Page 197 of 198
Samsung Electronics Co., Ltd. v. Asus Technology Licensing Inc.
IPR2024-01217

| | | | | | | | |
|---|---|---|---|---|---|---|---|
| | RP-50 | RP-101214 | 0286 | - | CR for Description of Energy Saving | 10.1.0 | 10.2.0 |
| | RP-50 | RP-101228 | 0287 | - | S1 non UE associated message handling | 10.1.0 | 10.2.0 |
| | RP-50 | RP-101214 | 0288 | - | Clarification to ANR Operation | 10.1.0 | 10.2.0 |
| | RP-50 | RP-101228 | 0289 | - | P-GW function embedded in DeNB and addressing requirements | 10.1.0 | 10.2.0 |
| | RP-50 | RP-101228 | 0290 | - | eNB Configuration Update procedure in RN startup and detach procedure | 10.1.0 | 10.2.0 |
| | RP-50 | RP-101231 | 0291 | - | Introduction of MCE initiated MBMS Session Start Request | 10.1.0 | 10.2.0 |
| | RP-50 | RP-101228 | 0292 | - | No NNSF function in RN | 10.1.0 | 10.2.0 |
| | RP-50 | RP-101228 | 0293 | - | S1 handover routing toward RN | 10.1.0 | 10.2.0 |
| | RP-50 | RP-101228 | 0294 | - | TNL address Handling | 10.1.0 | 10.2.0 |
| | RP-50 | RP-101214 | 0295 | - | Correction on SPID Transfer | 10.1.0 | 10.2.0 |
| | RP-50 | RP-101231 | 0296 | - | Support of ARP Pre-emption | 10.1.0 | 10.2.0 |
| | RP-50 | RP-101231 | 0297 | - | Support of MBMS Service Counting Report procedure | 10.1.0 | 10.2.0 |
| | RP-50 | RP-101222 | 0298 | - | Stage 2 for the X2 based mobility enhancement between HeNBs | 10.1.0 | 10.2.0 |
| | RP-50 | RP-101230 | 0299 | - | Introduction of event-triggered inter-RAT cell load reporting | 10.1.0 | 10.2.0 |
| | RP-50 | RP-101216 | 0300 | - | Introduction of LIPA function | 10.1.0 | 10.2.0 |
| | RP-50 | RP-101228 | 0301 | - | OAM requirements for QCI to DSCP mapping config for relays | 10.1.0 | 10.2.0 |
| | RP-50 | RP-101228 | 0302 | - | Non UE associated message handling | 10.1.0 | 10.2.0 |
| | RP-50 | RP-101224 | 0303 | - | Introduction of MTC Overload Support | 10.1.0 | 10.2.0 |
| | RP-50 | RP-101228 | 0304 | - | Relay Node Un Signalling Transport Support | 10.1.0 | 10.2.0 |
| | RP-50 | RP-101214 | 0305 | - | Complete S1 Interface Signalling Procedures | 10.1.0 | 10.2.0 |
| | RP-50 | RP-101229 | 0306 | 1 | X2 procedure and OAM requirements to support eICIC | 10.1.0 | 10.2.0 |
| | RP-50 | RP-101228 | 0307 | - | Stage-2 updates to RN initial attachment | 10.1.0 | 10.2.0 |
| | RP-50 | RP-101230 | 0308 | - | Functionality of SON MRO defined for Rel.10 | 10.1.0 | 10.2.0 |
| | | | | | | | |



Samsung Exhibit 1015, Page 198 of 198
Samsung Electronics Co., Ltd. v. Asus Technology Licensing Inc.
IPR2024-01217