US010101551B2

(12) **United States Patent**
Fukui et al.

(10) **Patent No.: US 10,101,551 B2**
(45) **Date of Patent: Oct. 16, 2018**

(54) **MULTI-CORE/SINGLE-CORE CONVERSION MODULE AND MULTI-CORE/SINGLE-CORE CONVERSION APPARATUS**

(71) Applicants: **SEI Optifrontier Co., Ltd.**, Yokohama-shi, Kanagawa (JP); **SUMITOMO ELECTRIC INDUSTRIES, LTD.**, Osaka-shi, Osaka (JP)

(72) Inventors: **Junji Fukui**, Yokohama (JP); **Kenichiro Ohtsuka**, Yokohama (JP); **Yuji Suzuki**, Yokohama (JP); **Hiroyasu Toyooka**, Yokohama (JP); **Takayuki Suzuki**, Yokohama (JP)

(73) Assignees: **SEI OPTIFRONTIER CO., LTD.**, Yokohama-shi, Kanagawa (JP); **SUMITOMO ELECTRIC INDUSTRIES, LTD.**, Osaka-shi, Osaka (JP)

(*) Notice: Subject to any disclaimer, the term of this patent is extended or adjusted under 35 U.S.C. 154(b) by 0 days.

(21) Appl. No.: **15/613,368**

(22) Filed: **Jun. 5, 2017**

(65) **Prior Publication Data**

US 2017/0359091 A1 Dec. 14, 2017

(30) **Foreign Application Priority Data**

Jun. 9, 2016 (JP) 2016-115487

(51) **Int. Cl.**
G02B 6/26 (2006.01)
G02B 6/42 (2006.01)
(Continued)

(52) **U.S. Cl.**
CPC ***G02B 6/4439*** (2013.01); ***G02B 6/02042*** (2013.01); ***G02B 6/3825*** (2013.01); ***G02B 6/4472*** (2013.01); *H04B 1/03* (2013.01)

(58) **Field of Classification Search**
CPC .. G02B 6/3825; G02B 6/4439; G02B 6/4471; G02B 6/4472; G02B 6/4475; G02B 6/02042
(Continued)

(56) **References Cited**

U.S. PATENT DOCUMENTS

4,986,762 A * 1/1991 Keith G02B 6/3823 385/76
6,227,885 B1 * 5/2001 Raviv H01R 9/2466 439/131
(Continued)

FOREIGN PATENT DOCUMENTS

EP 2434317 A1 * 3/2012 ..... G02B 6/00
WO WO-2010/148325 A1 12/2010

Primary Examiner — Robert Tavlykaev
(74) *Attorney, Agent, or Firm* — Drinker Biddle & Reath LLP

(57) **ABSTRACT**

A multi-core/single-core conversion module is disclosed. The multi-core/single-core conversion module includes a housing including a first end, a second end and a lateral wall defining an inner space between the first end and the second end, a first adapter attached to the first end of the housing, two or more second adapters attached to the second end of the housing, a multi-core optical connector inserted into the first adapter from the inner space of the housing, a plurality of single-core optical connectors respectively inserted into the second adapters from the inner space of the housing, and a plurality of optical fibers connecting the multi-core optical connector to the plurality of single-core optical connectors with each other. The second adapters are arranged on the second end across a plurality of tiers. An opening can be formed by a part of the lateral wall being detached.

22 Claims, 9 Drawing Sheets

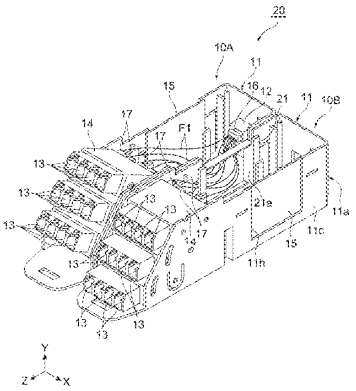

CommScope Ex. 1004

(51) **Int. Cl.**

G02B 6/44	(2006.01)
G02B 6/38	(2006.01)
G02B 6/02	(2006.01)
H04B 1/03	(2006.01)

(58) **Field of Classification Search**
USPC 385/22, 134
See application file for complete search history.

(56) **References Cited**

U.S. PATENT DOCUMENTS

D759,596	S *	6/2016	Byrne	D13/137.2
9,599,779	B2 *	3/2017	Lee	G02B 6/3897
9,625,668	B2 *	4/2017	Xu	G02B 6/4455
2010/0310225	A1 *	12/2010	Anderson	G02B 6/4455 385/135
2010/0322579	A1 *	12/2010	Cooke	G02B 6/4452 385/135
2015/0205060	A1 *	7/2015	Chen	G02B 6/3869 385/89

* cited by examiner

Fig.1

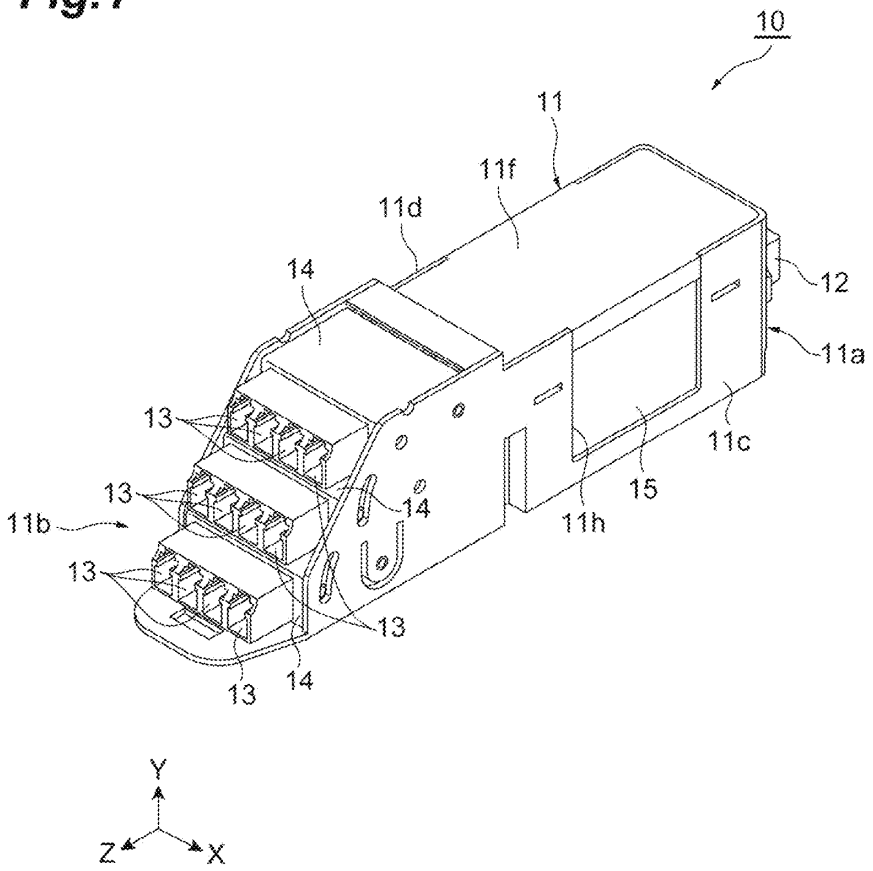

Fig.2

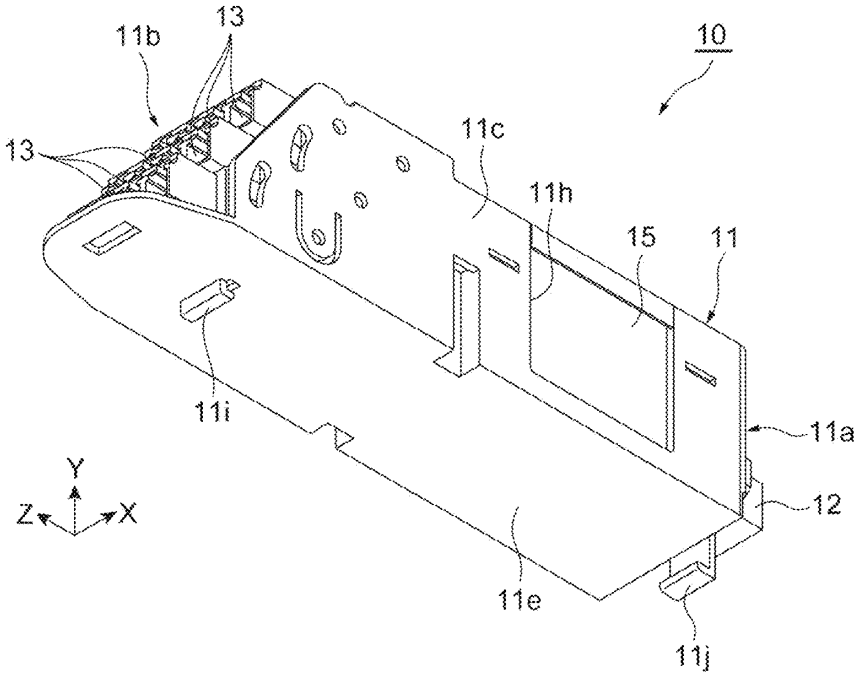

Fig.3

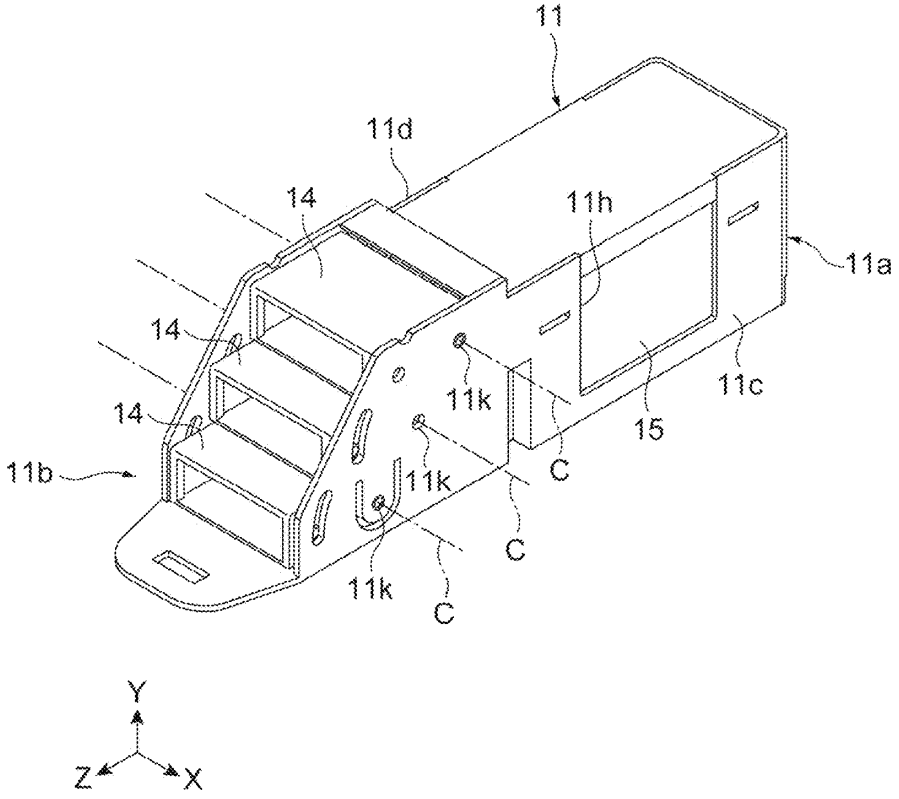

Fig.4

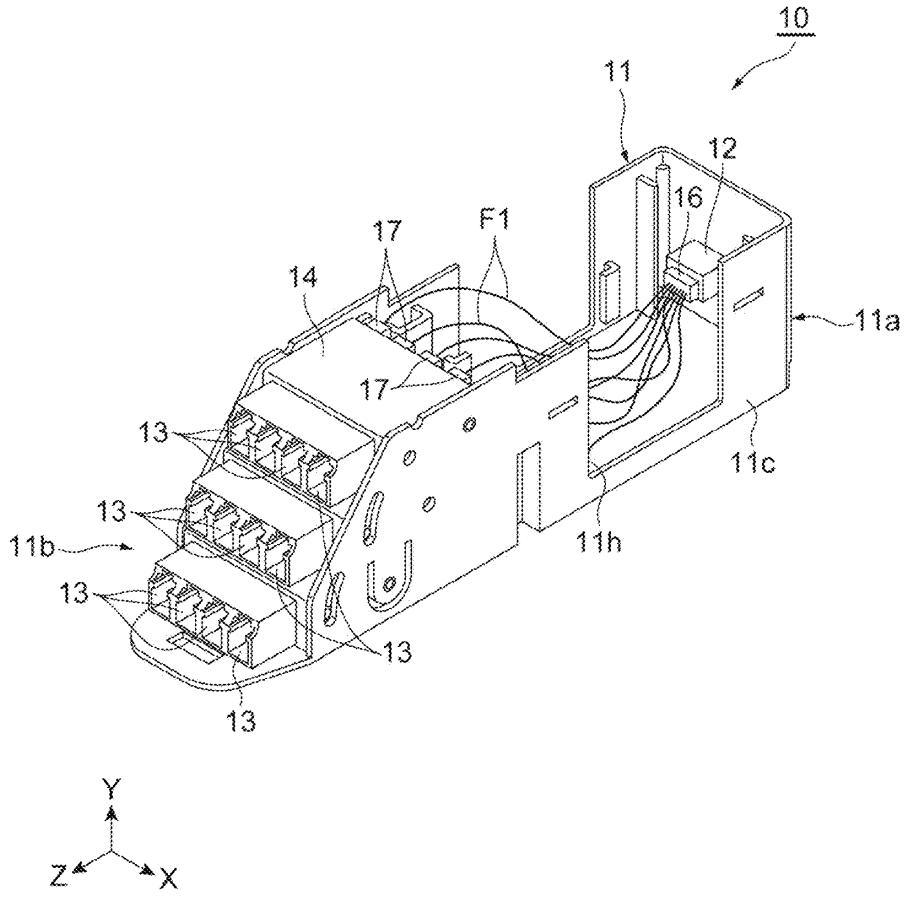

Fig.5

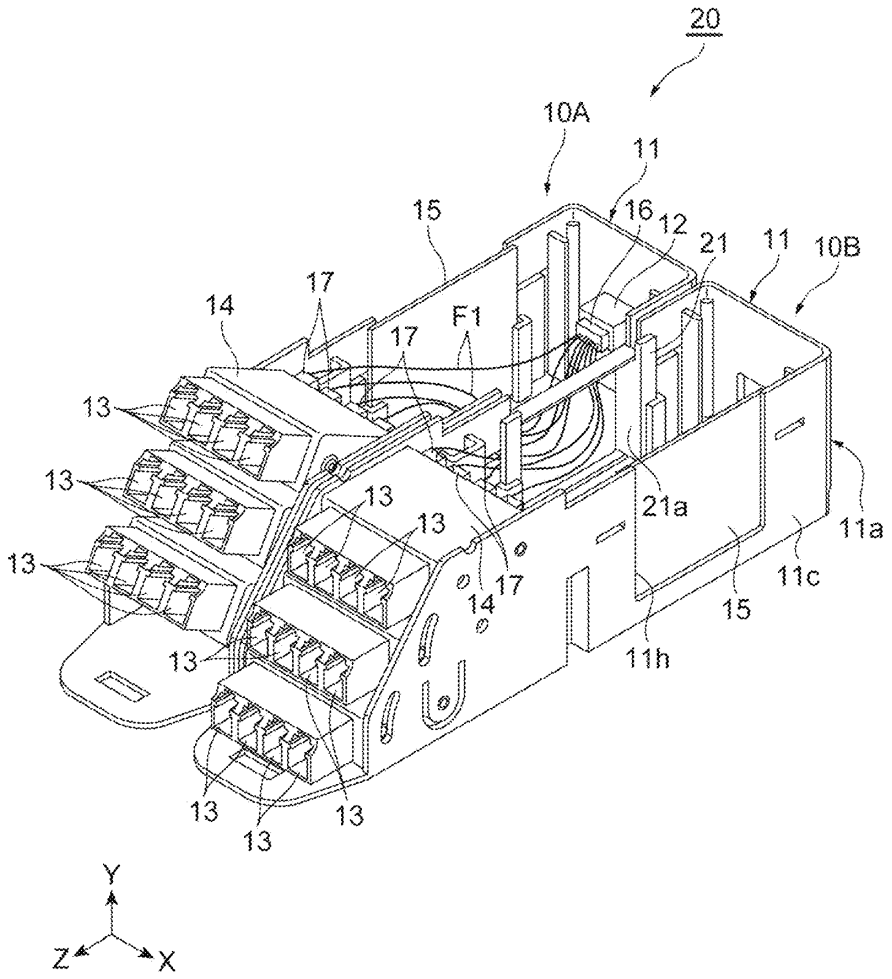
20
10A
11
15
16
12
21
11
10B
17
14
F1
17
13
13
13
13
13
21a
11a
17
14
11c
15
13
11h
13
13
13
Y
Z
X

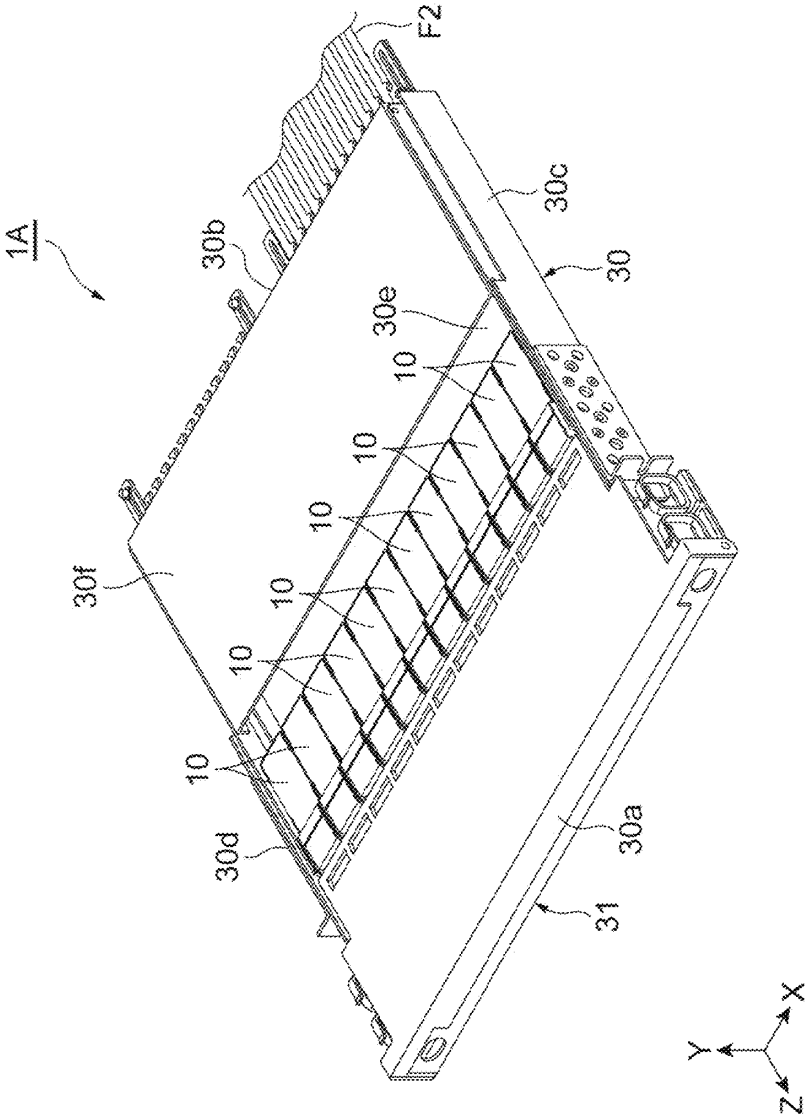

Fig.6

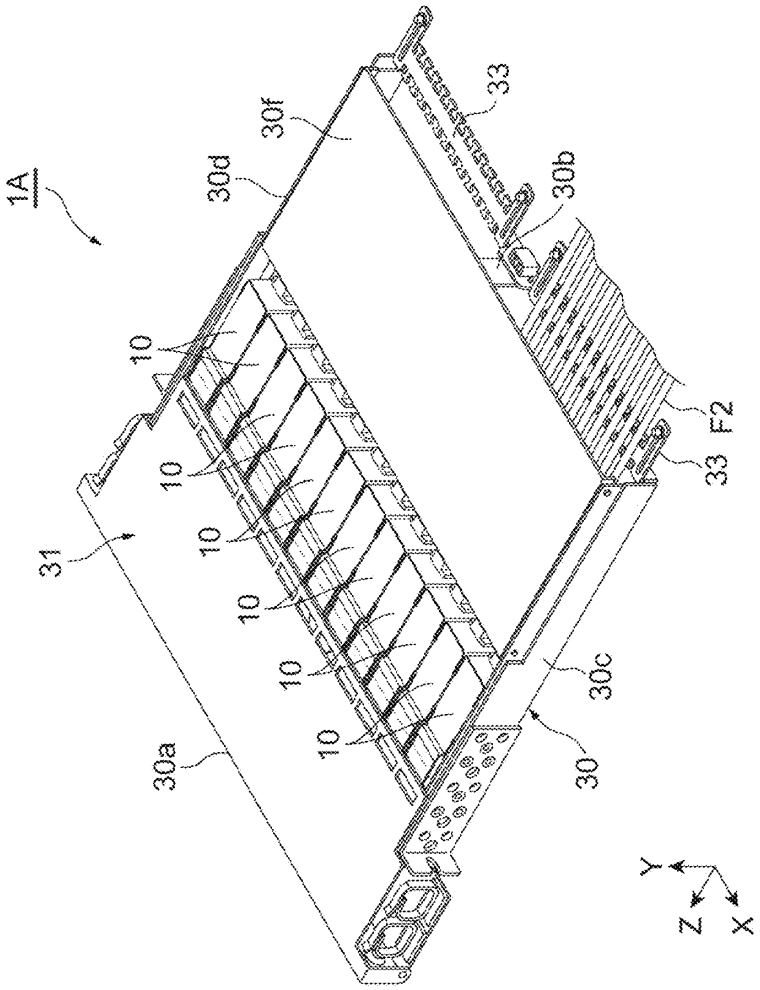

Fig.7

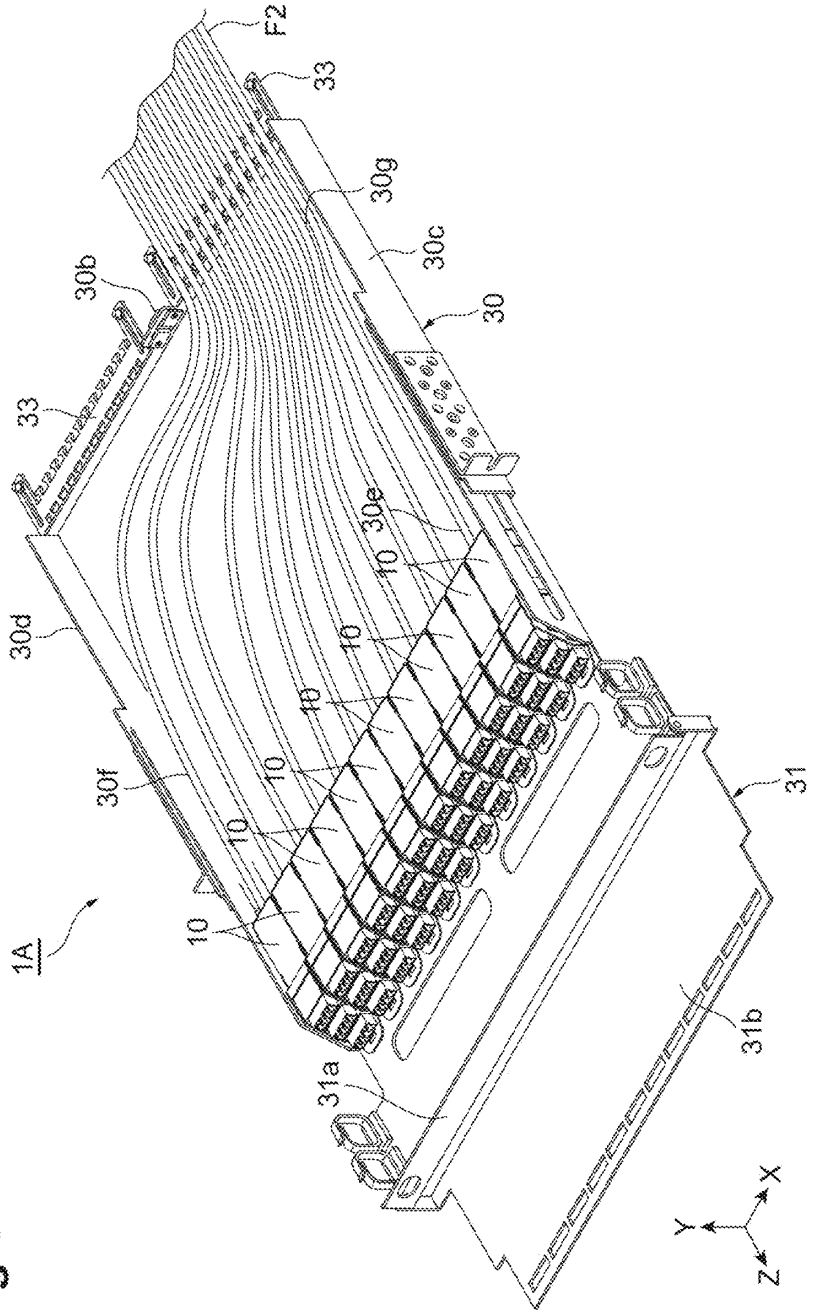
F2
33
30g
30c
30
30b
33
30e
10
10
10
10
10
10
30d
30f
1A
31
31b
31a
X
Y
Z

Fig.8

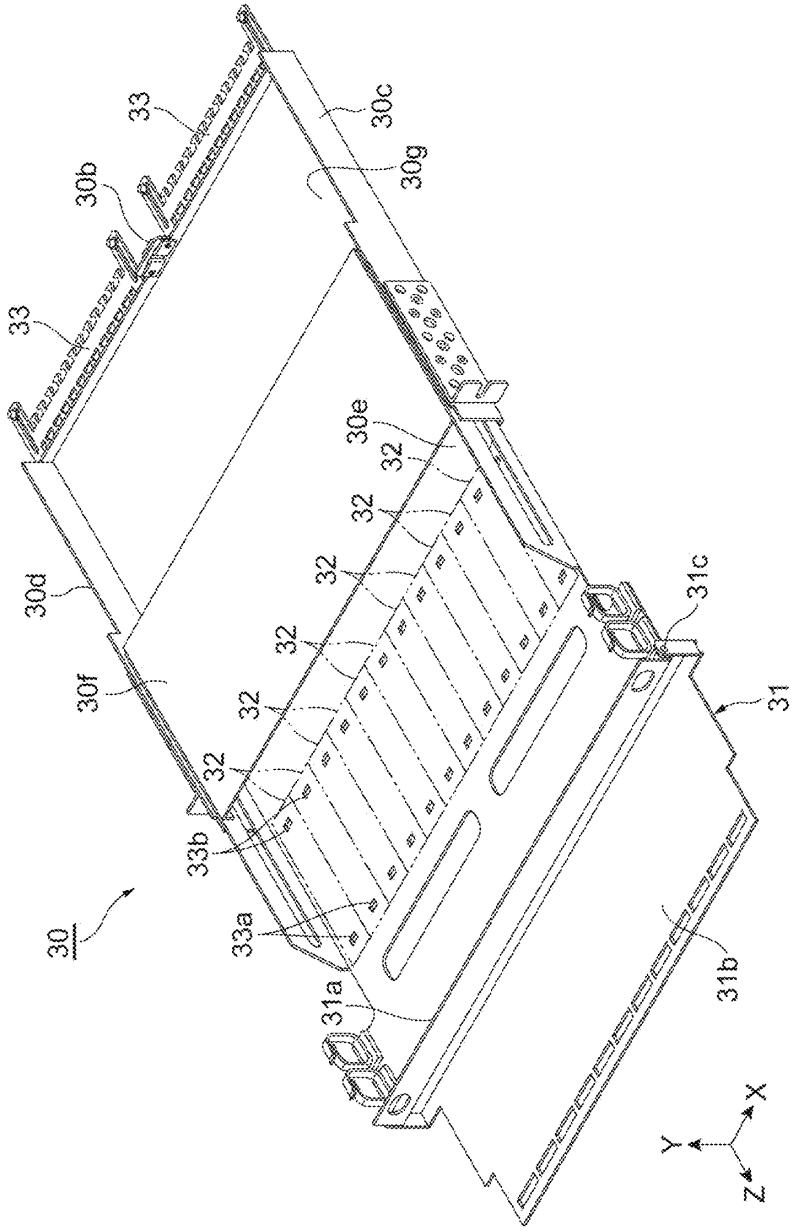

Fig.9

MULTI-CORE/SINGLE-CORE CONVERSION MODULE AND MULTI-CORE/SINGLE-CORE CONVERSION APPARATUS

CROSS REFERENCE TO RELATED APPLICATIONS

This application is based upon and claims the benefit of priority from Japanese Patent Application No. 2016-115487, filed on Jun. 9, 2016; the entire contents of which are incorporated herein by reference.

TECHNICAL FIELD

The present invention relates to a multi-core/single-core conversion module and a multi-core/single-core conversion apparatus.

BACKGROUND

WO2010/148325 discloses an apparatus for packing a fiber optic cable in a high density. The apparatus includes a plurality of fiber optic modules, in which each fiber optic module has a housing, an MPO fiber optic adapter provided on a rear face of the housing, and a plurality of LC fiber optic adapters provided on a front face of the housing. The plurality of LC fiber optic adapters is arranged on the front face of the housing to be aligned in a direction along a bottom face of the housing. Inside the housing, optical fibers extends from LC connectors which are inserted into the respective LC fiber optic adapters, these optical fibers are connected together to an MPO connector, and the MPO connector is inserted into the MPO fiber optic adapter.

SUMMARY

As an aspect of the present invention, a multi-core/single-core conversion module comprises a housing including a first end, a second end, and a lateral wall defining an inner space between the first end and the second end; a first adapter attached to the first end of the housing; two or more second adapters attached to the second end of the housing; a multi-core optical connector inserted into the first adapter from the inner space of the housing; a plurality of single-core optical connectors respectively inserted into the second adapters from the inner space of the housing; and a plurality of optical fibers connecting the multi-core optical connector to the plurality of single-core optical connectors with each other. The second adapters are arranged on the second end across a plurality of tiers. An opening can be formed by a part of the lateral wall being detached.

As another aspect of the present invention, a multi-core/single-core conversion module comprises a first and a second unit modules each unit module comprising a housing including a first end, a second end and a lateral wall defining an inner space between the first end and the second end, a first adapter attached to the first end of the housing, and two or more second adapters attached to the second end of the housing; a multi-core optical connector inserted into the first adapter of the first unit module from the inner space of the housing; a first single-core optical connector inserted into one of the second adapters of the first unit module from the inner space of the housing of the first unit module; a second single-core optical connector inserted into one of the second adapters of the second unit module from the inner space of the housing of the second unit module; and a plurality of optical fibers connecting the multi-core optical connector to the first and second single-core optical connectors with each other. The second adapters are arranged on the second end of each unit module across a plurality of tiers. The optical fiber connecting the multi-core optical connector with the second single-core optical connector with each other passes through an opening formed on the lateral wall of the first unit module and an opening formed on the lateral wall of the second unit module.

BRIEF DESCRIPTION OF THE DRAWINGS

The foregoing and other purposes, aspects and advantages will be better understood from the following detailed description of embodiments of the invention with reference to the drawings, in which:

FIG. **1** is a perspective view showing an outer appearance of a multi-core/single-core conversion module according to an embodiment of the present invention, the multi-core/single-core conversion module being seen obliquely from above,

FIG. **2** is a perspective view showing an outer appearance of the multi-core/single-core conversion module according to an embodiment of the present invention, the multi-core/single-core conversion module being seen obliquely from below,

FIG. **3** is a perspective view showing an outer appearance of the multi-core/single-core conversion module shown in FIG. **1** in a state where the single-core optical connector adapter is detached,

FIG. **4** is a perspective view showing the conversion module in a state where a top panel and a shutter are detached,

FIG. **5** is a perspective view showing a conversion modules coupling structure,

FIG. **6** is a perspective view showing an outer appearance of a multi-core/single-core conversion apparatus as seen obliquely from front,

FIG. **7** is a perspective view showing an outer appearance of the multi-core/single-core conversion apparatus as seen obliquely from back,

FIG. **8** is a perspective view of the multi-core/single-core conversion apparatus in a state where a front lid of a base member is open, and

FIG. **9** is a perspective view showing a shape of the base member.

DETAILED DESCRIPTION

Description of Embodiment of the Present Application

First, contents of embodiments of the present invention are recited and described. A first multi-core/single-core conversion module according to an embodiment of the present invention comprises a housing including a first end, a second end, and a lateral wall defining an inner space between the first end and the second end; a first adapter attached to the first end of the housing; two or more second adapters attached to the second end of the housing; a multi-core optical connector inserted into the first adapter from the inner space of the housing; a plurality of single-core optical connectors respectively inserted into the second adapters from the inner space of the housing; and a plurality of optical fibers connecting the multi-core optical connector to the plurality of single-core optical connectors with each other. The second adapters are arranged on the second end

across a plurality of tiers, and an opening can be formed by a part of the lateral wall being detached.

The first multi-core/single-core conversion module has two or more second adapters for single-core optical connectors arranged across a plurality of tiers. Since this conversion module is different from a configuration where a plurality of multi-core/single-core conversion modules are stacked each having the single-core optical connector adapters arranged on one tier, it is possible to reduce works to draw out the module for each tier when the module is exchanged. Therefore, the exchange work can be facilitated with the above multi-core/single-core conversion module.

In the first multi-core/single-core conversion module, the lateral wall is configured so that the opening can be formed thereon, and at least one optical fiber of the optical fiber extending from the multi-core optical connector and the optical fiber extending from the single-core optical connector can be led from the relevant opening to an adjacent module. When the number of cores of the multi-core fiber optic cable increases, besides the single-core optical connector adapter of the relevant module, the single-core optical connector adapter of the adjacent module can be used. Therefore, with the multi-core/single-core conversion module, the number of the single-core optical connector adapters can be easily increased or decreased depending on the number of cores of the multi-core fiber optic cable, the various numbers of cores of the multi-core fiber optic cable can be supported.

A second multi-core/single-core conversion module according to an embodiment of the present invention a first and a second unit modules each unit module comprising a housing including a first end, a second end and a lateral wall defining an inner space between the first end and the second end, a first adapter attached to the first end of the housing, and two or more second adapters attached to the second end of the housing; a multi-core optical connector inserted into the first adapter of the first unit module from the inner space of the housing; a first single-core optical connector inserted into one of the second adapters of the first unit module from the inner space of the housing of the first unit module; a second single-core optical connector inserted into one of the second adapters of the second unit module from the inner space of the housing of the second unit module; and a plurality of optical fibers connecting the multi-core optical connector to the first and second single-core optical connectors with each other. The second adapters are arranged on the second end of each unit module across a plurality of tiers. The optical fiber connecting the multi-core optical connector with the second single-core optical connector with each other passes through an opening formed on the lateral wall of the first unit module and an opening formed on the lateral wall of the second unit module.

Since the second multi-core/single-core conversion module has, similarly to the first multi-core/single-core conversion module descried above, two or more second adapters for single-core optical connectors arranged across a plurality of tiers, the exchange work can be facilitated. Additionally, in the second multi-core/single-core conversion module, the optical fiber extending from the multi-core optical connector passes through the opening formed on the lateral wall of the first unit module and the opening formed on the lateral wall of the second unit module to reach the second single-core optical connector. When the number of cores of the multi-core fiber optic cable decreases, the second unit module can be easily removed. In other words, according to the second multi-core/single-core conversion module, since the number of the single-core optical connector adapters can be easily increased or decreased depending on the number of cores of the multi-core fiber optic cable, the various numbers of cores of the multi-core fiber optic cable can be supported.

The second multi-core/single-core conversion module may further comprise a module coupling member having one end detachably attached to the lateral wall of the first unit module and the other end detachably attached to the lateral wall of the second unit module. This allows the first and second unit modules to be easily fixed to each other without obstructing the optical fiber led from the first unit module to the second unit module.

The first and second multi-core/single-core conversion modules may further comprise an adapter holder attached to the housing so as to be pivotable around an axis line crossing a tier direction of the plurality of tiers to hold the second connector adapter for each tier. This makes it possible to make spaces, when inserting and drawing out the single-core optical connector into and from the second adapter for a single-core optical connector, between the relevant connector and the single-core optical connectors locating on upper and lower tiers of the relevant connector, allowing a finger of a worker to be easily inserted between the tiers to facilitate the inserting and drawing out work.

A multi-core/single-core conversion apparatus according to an embodiment of the present invention comprises a plurality of multi-core/single-core conversion modules including at least one of the first multi-core/single-core conversion module and the second multi-core/single-core conversion module, and a base member supporting the plurality of multi-core/single-core conversion modules. The base member may provide a plurality of areas for placing the plurality of multi-core/single-core conversion modules thereon, and the plurality of areas may be arranged along a first direction. The plurality of multi-core/single-core conversion modules may be respectively placed on the plurality of areas along the first direction in such a way that adjacent lateral walls of the plurality of multi-core/single-core conversion modules are faced with each other. According to the multi-core/single-core conversion apparatus, similarly to the multi-core/single-core conversion module described above, the exchange work of the multi-core/single-core conversion module can be facilitated and the various numbers of cores of the multi-core fiber optic cable can be supported.

Detail of Embodiments of the Present Application

A description is given below of concrete examples of the multi-core/single-core conversion module and the multi-core/single-core conversion apparatus according to the embodiments of the present invention with reference to the drawings. The invention is not limited to the examples, and is intended to include the meanings shown by the scope of the Claims and equivalent to the scope of the Claims, and all changes in the scope thereof. In the following description, the same components in description of the drawings are designated by the same reference signs, and the duplicated description is omitted. Note that a common XYZ orthogonal coordinate system is shown in each drawing for easy understanding.

FIG. **1** and FIG. **2** are each a perspective view showing an outer appearance of a first multi-core/single-core conversion module (hereinafter, referred to as conversion module) **10** according to an embodiment of the present invention. FIG. **1** is a view of the conversion module **10** seen obliquely from above and FIG. **2** is a view of the conversion module **10** seen obliquely from below. As shown in FIG. **1** and FIG. **2**, the conversion module **10** in the embodiment includes a hollow

housing **11** in a substantially rectangular parallelepiped shape extending in a Z direction, a multi-core optical connector adapter **12**, and two or more single-core optical connector adapters **13**. The housing **11** is made of, for example, integrally molded resin for the sake of lower cost and light weight. The housing **11** includes a rear end **11***a* and a front end **11***b* arranged along the Z direction, a pair of lateral walls **11***c* and **11***d* in a substantially rectangular shape joining the rear end **11***a* and the front end **11***b*, a bottom panel **11***e* in a substantially rectangular shape, and a top panel **11***f* in a substantially rectangular shape.

The multi-core optical connector adapter **12** is an adapter for connecting a multi-core optical connector (e.g., an MPO connector) having, for example, 12 cores or 24 cores, and has a pair of openings for respectively accepting two multi-core optical connectors. The multi-core optical connector adapter **12** is attached to the rear end **11***a* of the housing **11**. Specifically, the multi-core optical connector adapter **12** is fixed to penetrate through a rear wall provided to the rear end **11***a* of the housing **11**, and one opening is located inside the housing **11** and the other opening is located outside the housing **11**.

Each single-core optical connector adapter **13** is an adapter for connecting a single-core optical connector (e.g., an LC connector), and has a pair of openings for respectively accepting two single-core optical connectors. The single-core optical connector adapter **13** is attached to the front end **11***b* of the housing **11**. Specifically, two or more single-core optical connector adapters **13** are arranged on the front end **11***b* across a plurality of tiers. In the embodiment, four single-core optical connector adapters **13** per one tier are arranged across three tiers. The plurality of single-core optical connector adapters **13** (four in the embodiment) located on the same tier may be made into one body. A single single-core optical connector adapter **13** and the single-core optical connector adapters **13** made into one body may be present together in combination. One opening of the single-core optical connector adapter **13** is located inside the housing **11**, and the other opening is located outside the housing **11**.

These single-core optical connector adapters **13** are held in an adapter socket **14** (adapter holder) provided to the front end **11***b* of the housing **11**. Here, FIG. **3** is a perspective view showing a state where the single-core optical connector adapter **13** is detached. As shown in FIG. **3**, the adapter socket **14** is provided by one per one tier, and three adapter sockets **14** are provided in the embodiment. These adapter sockets **14** each assume a tube having a rectangular section and each extend in the Z direction, for example.

These adapter sockets **14** are each attached to the housing **11** so as to be pivotable around an axis line C crossing a tier direction (Y axis direction). For example, columnar protrusions are provided on both lateral faces of the adapter socket **14** in the axis lines C, and these protrusions fit with circular bores **11***k* formed on the lateral walls **11***c* and **11***d* of the housing **11** such that the adapter sockets **14** are pivotable around the axis lines C. Note that the lateral walls **11***c* and **11***d* are partially cut out around the circular bores **11***k* on a lowermost tier to be easily deformable so as to facilitate the fit of the protrusions.

As shown in FIG. **1**, the adapter socket **14** on the lowermost tier collectively houses four single-core optical connector adapters **13** on the lower most tier. The adapter socket **14** on a middle tier collectively houses four single-core optical connector adapters **13** on the middle tier. The adapter socket **14** on an uppermost tier collectively houses four single-core optical connector adapters **13** on the uppermost tier.

As shown in FIG. **3**, the closer to the lowermost tier, the more forward the adapter socket **14** is located. In other words, the adapter socket **14** on the middle tier is located more forward than the adapter socket **14** on the uppermost tier, and the adapter socket **14** on the lowermost tier is located more forward than the adapter socket **14** on the middle tier. Therefore, the closer to the lowermost tier, the more forward the single-core optical connector adapter **13** locates. In other words, the single-core optical connector adapters **13** on the middle tier are located more forward than the single-core optical connector adapters **13** on the uppermost tier, and the single-core optical connector adapters **13** on the lowermost tier are located more forward than the single-core optical connector adapters **13** on the middle tier. Note that the adapter sockets **14** (single-core optical connector adapters **13**) on the respective tiers may be arranged along the same position in the Z direction.

The lateral walls **11***c* and **11***d* of the housing **11** are each configured such that the opening can be formed by a part thereof being detached. For example, on each of the lateral walls **11***c* and **11***d* of the housing **11**, an opening **11***h* closed by a detachable shutter **15** is formed. The opening **11***h* is formed into a rectangular shape, for example, and in an example, is formed from an uppermost portion of each of the lateral walls **11***c* and **11***d* (i.e., portion in contact with the top panel **11***f*) through a lowermost portion of each of the lateral walls **11***c* and **11***d* (i.e., portion in contact with the bottom panel **11***e*). When the opening **11***h* is used, the shutter **15** is detached from the opening **11***h*.

FIG. **4** is a perspective view showing the conversion module **10** in a state where the top panel **11***f* and the shutter **15** are detached. As shown in FIG. **4**, a multi-core optical connector **16** is inserted into the multi-core optical connector adapter **12** from the inner side of the housing **11**, and many optical fibers F**1** extend from the multi-core optical connector **16**. A single-core optical connector **17** is inserted into the single-core optical connector adapter **13** from the inner side of the housing **11**, and one optical fiber F**1** extends from the single-core optical connector **17**. In FIG. **4**, these optical fibers F**1** connect the multi-core optical connector **16** with the single-core optical connectors **17** with each other, but the opening **11***h* leads, to an adjacent module, at least one optical fiber F**1** of the optical fibers F**1** extending from the multi-core optical connector **16** and the optical fibers F**1** extending from the single-core optical connectors **17**, as needed.

The multi-core optical connector attached to a tip end of the multi-core fiber optic cable extending from outside the conversion module **10** is inserted into the multi-core optical connector adapter **12** from the outer side of the housing **11**. This allows the relevant multi-core optical connector and the multi-core optical connector **16** to face to each other inside the multi-core optical connector adapter **12** to be optically linked to each other. The single-core optical connector attached to a tip of the single-core fiber optic cable extending from outside the conversion module **10** is inserted into the single-core optical connector adapter **13** from the outer side of the housing **11**. This allows the relevant single-core optical connector and the single-core optical connector **17** to face to each other inside the single-core optical connector adapter **13** to be optically linked to each other.

When assembling the conversion module **10** in the embodiment having the above configuration, firstly, the multi-core optical connector **16** and the plurality of single-core optical connectors **17** are connected to each other by the

optical fibers F**1**. Next, the plurality of single-core optical connectors **17** and the optical fibers F**1** are divided into three sets and the multi-core optical connector **16** is inserted into the multi-core optical connector adapter **12**, and thereafter, the sets of the single-core optical connectors **17** and the optical fibers F**1** are passed through the corresponding adapter sockets **14**, respectively. Then, each single-core optical connector **17** is inserted into the corresponding single-core optical connector adapter **13**. Subsequently, each single-core optical connector adapter **13** is inserted into the corresponding adapter socket **14** and the respective adapter sockets **14** are attached to the housing **11** in order from the lowermost tier. The shutter **15** is attached to the housing **11**, as needed, and the optical fibers F**1** are housed inside the housing **11**. Finally, the top panel **11***f* is attached to the housing **11** to complete the conversion module **10**. In this way, even in a case where a single conversion module **10** is used rather than a plurality thereof coupled to each other, an assembling work, particularly, a connecting work of the optical fibers F**1** inside the housing **11** can be further facilitated by detaching the shutter **15** in advance and finally attaching the shutter **15** to close the opening **11***h*.

FIG. **5** is a perspective view showing a second conversion module **20** according to the embodiment. FIG. **5** omits showing the top panel **11***f*. As shown in FIG. **5**, the conversion module **20** includes a first unit module **10**A and a second unit module **10**B. Note that configurations of these unit modules **10**A and **10**B are the same as that of the conversion module **10** described above. The single-core optical connector **17** of the unit module **10**A is an example of the first single-core optical connector, and the single-core optical connector **17** of the unit module **10**B is an example of the second single-core optical connector.

The conversion module **20** further includes a module coupling member **21**. The module coupling member **21** spans the opening **11***h* of the unit module **10**A and the opening **11***h* of the unit module **10**B, and has one end on the unit module **10**A side detachably attached to the opening **11***h* on the lateral wall **11***c* of the unit module **10**A and the other end on the unit module **10**B side detachably attached to the opening **11***h* on the lateral wall **11***d* of the unit module **10**B. The module coupling member **21** has an open hole **21***a* penetrating from one end to the other end thereof. The open hole **21***a* is formed into, for example, a shape similar to the shape of the opening **11***h* (rectangular shape, in an example). The module coupling member **21** couples the housing **11** of the unit module **10**A with the housing **11** of the unit module **10**B to each other, and communicates the opening **11***h* on the lateral wall **11***c* of the unit module **10**A with the opening **11***h* on the lateral wall **11***d* of the unit module **10**B with each other.

The optical fibers F**1** extending from the multi-core optical connector **16** of the first unit module **10**A pass through the respective openings **11***h* (that is, through the module coupling member **21**) to be led to the second unit module **10**B. For example, in FIG. **5**, a part of the optical fibers F**1** extending from the multi-core optical connector **16** of the unit module **10**A pass through the module coupling member **21** to be led into the housing **11** of the unit module **10**B and are connected to the single-core optical connectors **17** of the unit module **10**B. According to such a configuration, the number of cores of the multi-core optical connector **16** in the unit module **10**A can be increased (expanded) more than the number of the single-core optical connectors **17** in the unit module **10**A. In other words, in this example, the number of cores of the multi-core optical connector **16** can be expanded to 24 cores. Further, the expansion can be easily made by the number of the coupled unit modules such as 36 cores and 48 cores. Additionally, a plurality of coupled unit modules can be dealt with as one body. For this reason, in the expansion, it is not necessary to prepare different shape unit modules, so long as the required number of the same shape unit modules are prepared.

FIG. **6** to FIG. **8** each are a perspective view showing an outer appearance of a multi-core/single-core conversion apparatus (hereinafter, referred to as conversion apparatus) **1**A according to the embodiment. FIG. **6** shows an outer appearance of the conversion apparatus **1**A as seen obliquely from front, and FIG. **7** shows an outer appearance of the conversion apparatus **1**A as seen obliquely from back. FIG. **8** is a perspective view showing a state where a front lid **31** of a base member **30** that the conversion apparatus **1**A includes is open.

As shown in FIG. **6** to FIG. **8**, the conversion apparatus **1**A includes a plurality of conversion modules **10** and the base member **30**. A part or all of the plurality of conversion modules **10** may be the unit module **10**A or **10**B shown in FIG. **5**. In other words, at least one of the conversion module **10** and the conversion module **20** is included in the plurality of conversion modules that the conversion apparatus **1**A includes. The base member **30** is a member made of metal supporting the plurality of conversion modules **10**. The base member **30** is a hollow box-like member in a rectangular parallelepiped shape. As shown in FIG. **6** and FIG. **7**, the base member **30** has a front face **30***a*, a rear face **30***b*, a pair of lateral faces **30***c* and **30***d*, a bottom panel **30***e*, and a top panel **30***f*. The plurality of conversion modules **10** are arranged on the bottom panel **30***e* inside the base member **30** along an X direction (first direction).

Here, FIG. **9** is a perspective view showing the shape of the base member **30**. As shown in FIG. **9**, the base member **30** has the front lid **31** provided to a front side thereof. The front lid **31** includes a plate **31***a* configuring the front face **30***a* of the base member **30** and a plate **31***b* configuring a part of the top panel, and the front lid **31** is configured by these plates **31***a* and **31***b* being joined perpendicularly with each other. The front lid **31** is attached on a front edge of the bottom panel **30***e* in a state of being pivotable around a shaft **31***c* extending in the X direction. This facilitates an access to each single-core optical connector adapter **13** of the plurality of conversion modules **10**.

As shown in FIG. **9**, the base member **30** has a plurality of areas **32** on the bottom panel **30***e* for placing the plurality of conversion modules **10** respectively. The plurality of areas **32** are provided to be arranged along the X direction. The plurality of conversion modules **10** are placed on the plurality of areas **32** in such a way that their lateral walls **11***c* and **11***d* are arranged with each other along the X direction. Two holes **33***a* and **33***b* are provided to each of these areas **32**, and two hooks **11***i* and **11***j* (see FIG. **2**) protruding from the bottom face of the housing **11** of each conversion module **10** engage with these holes **33***a* and **33***b* such that each conversion module **10** is easily fixed to the base member **30**.

The bottom panel **30***e* is arranged overlapping another bottom panel **30***g*. The bottom panel **30***g* is formed into one body with lateral plates configuring the lateral faces **30***c* and **30***d*, and the bottom panel **30***e* is attached to be slidable to these bottom panel **30***g* and lateral faces **30***c* and **30***d* in the Z direction. This facilitates an access to each single-core optical connector adapter **13** of the plurality of conversion modules **10**.

To an end of the bottom panel **30***g* on the rear face **30***b* side, provided is a supporting plate **33** supporting multi-core fiber optic cables F**2** extending from the plurality of con-

version modules **10**. The supporting plate **33** is oriented in the same direction as the bottom panel **30***e*, and the multi-core fiber optic cables F**2** are arranged on the supporting plate **33** along the X direction. This allows many multi-core fiber optic cables F**2** to be orderly drawn out from the rear face **30***b* of the base member **30**.

A description is given of effects obtained from the conversion module **10**, the conversion module **20**, the base member **30**, and the conversion apparatus **1**A according to the embodiment described above. In the conversion modules **10** and **20** in the embodiment, two or more single-core optical connector adapters **13** are arranged across a plurality of tiers. Since these conversion modules **10** and **20** are different from a configuration where a plurality of conversion modules are stacked each having the single-core optical connector adapters arranged on one tier, the conversion modules can be laterally aligned as shown in FIG. **8**, for example. This allows, in exchanging the module, a worker to directly access the conversion module **10** (or **20**) to be exchanged, reducing the work of drawing out for each tier the conversion modules to be exchanged which are across a plurality of tiers. Alternatively, even in a case where the plurality of conversion modules **10** (or **20**) are stacked in a height direction (Y direction), the number of stacks is lowered as compared to the conventional configuration, allowing the number of times of drawing for each tier to be reduced. Therefore, the exchange work can be facilitated according to the conversion modules **10** and **20** in the embodiment.

In particular, according to the conversion modules **10** and **20** in the embodiment, it is possible to house the modules to be laterally aligned in a so-called 19-inch rack standardized by the Electronic Industries Alliance (EIA) in **1**U size, for example, as well as the single-core optical connector adapters **13** can be arranged in plural tiers. For example, in the case of the conversion module **10**, up to 1 tier×12 rows of the modules **10**, that is, **144** single-core optical connector adapters **13** in total are housed in **1**U size. Alternatively, in the case of the conversion module **20** coupling two unit modules, up to 1 tier×6 rows of the modules **20**, that is, **144** single-core optical connector adapters **13** in total are housed. Of course, the conversion modules **10** and **20** may be present together in combination.

In the conversion module **10** in the embodiment, each of the lateral walls **11***c* and **11***d* is configured so that the opening **11***h* can be formed thereon, and at least one optical fiber F**1** of the optical fiber F**1** extending from the multi-core optical connector **16** and the optical fiber F**1** extending from the single-core optical connector **17** is led from the relevant opening **11***h* to the adjacent module. When the number of cores of the multi-core fiber optic cable F**2** increases, besides the single-core optical connector adapter **13** of the relevant module, the single-core optical connector adapter **13** of the adjacent module can be used. Therefore, according to the conversion module **10**, since the number of the single-core optical connector adapters **13** can be easily increased or decreased depending on the number of cores of the multi-core fiber optic cable F**2**, the various numbers of cores of the multi-core fiber optic cable F**2** can be supported.

Similarly to the above, in the conversion module **20** in the embodiment, a part of the optical fibers F**1** extending from the multi-core optical connector **16** pass through the opening **11***h* formed on the lateral wall **11***c* of the unit module **10**A and the opening **11***h* formed on the lateral wall **11***d* of the unit module **10**B to reach the single-core optical connectors **17** of the unit module **10**B. When the number of cores of the multi-core fiber optic cable F**2** decreases, the unit module **10**B can be easily removed. In other words, according to the conversion module **20**, since the number of the single-core optical connector adapters **13** can be easily increased or decreased depending on the number of cores of the multi-core fiber optic cable F**2**, the various numbers of cores of the multi-core fiber optic cable F**2** can be supported. Further, according to the conversion module **20** in the embodiment, since two unit modules **10**A and **10**B having the common configuration are used, cost reduction owing to commonalized components can be expected.

As in the embodiment, the conversion module **10** may include the module coupling member **21** shown in FIG. **5**. This allows the unit module **10**A and the unit module **10**B to be easily fixed to each other by use of the opening **11***h* without obstructing the optical fiber F**1** led from the unit module **10**A to the unit module **10**B.

As in the embodiment, the conversion modules **10** and **20** may include the pivotable adapter socket **14** shown in FIG. **3**. This makes it possible to make spaces, when inserting and drawing out the single-core optical connector into and from the opening, of the single-core optical connector adapter **13**, on the outer side of the housing, between the relevant connector and the single-core optical connectors located on upper and lower tiers of the relevant connector, allowing a finger of a worker to be easily inserted between the tiers to facilitate the inserting and drawing out work. Additionally, as in the embodiment, the closer to the lowermost tier, the more forward the single-core optical connector adapter **13** may be located. This can further facilitate the inserting and drawing work.

According to the conversion apparatus **1**A in the embodiment, similarly to the conversion modules **10** and **20** described above, the exchange work can be facilitated and the various numbers of cores of the multi-core fiber optic cable F**2** can be supported.

The multi-core/single-core conversion module and the multi-core/single-core conversion apparatus according to the present invention are not limited to the above embodiments and can be variously modified in other ways. For example, the above embodiment shows the example in which the single-core optical connector adapters are arranged on three tiers, but the single-core optical connector adapters can be arranged on the various numbers of two or more tiers. Moreover, the above embodiment shows the example in which the opening is formed on the lateral wall on each of both sides, but the opening may be formed only on the lateral wall on one side. Further, the above embodiment shows the example in which the module coupling member is attached to the opening on the lateral wall, but the module coupling member may be attached to another portion on the lateral wall, or may be attached to other portion than on the lateral wall of the housing.

What is claimed is:

1. A multi-core/single-core conversion module comprising:

a housing including a first end, a second end, and a lateral wall defining an inner space between the first end and the second end;

a first adapter attached to the first end of the housing;

two or more second adapters attached to the second end of the housing;

a multi-core optical connector inserted into the first adapter from the inner space of the housing;

a plurality of single-core optical connectors respectively inserted into the second adapters from the inner space of the housing; and

a plurality of optical fibers connecting the multi-core optical connector to the plurality of single-core optical connectors with each other,

wherein the second adapters are arranged on the second end across a plurality of tiers, and

wherein a removably attachable shutter is configured to close an opening of the lateral wall of the housing in an attached state.

2. The multi-core/single-core conversion module according to claim **1**, further comprising an adapter holder attached to the housing so as to be pivotable around an axis line crossing a tier direction of the plurality of tiers, the adapter holder holding the second adapters for each tier.

3. The multi-core/single-core conversion module according to claim **2**, wherein the adapter holder includes one of a protrusion and a bore while the lateral wall includes other of the protrusion and the bore, and the protrusion fits with the bore so that the adapter holder is pivotable around the axis.

4. The multi-core/single-core conversion module according to claim **3**, wherein the lateral wall includes a cut-out around the bore when the adapter holder includes the pivot and the lateral wall includes the bore.

5. A multi-core/single-core conversion apparatus comprising:

a plurality of multi-core/single-core conversion modules including the multi-core/single-core conversion module according to claim **2**; and

a base member supporting the plurality of multi-core/single-core conversion modules.

6. The multi-core/single-core conversion apparatus according to claim **5**,

wherein the base member provides a plurality of areas for placing the plurality of multi-core/single-core conversion modules thereon, the plurality of areas being arranged along a first direction, and

wherein the plurality of multi-core/single-core conversion modules are respectively placed on the plurality of areas along the first direction in such a way that adjacent lateral walls of the plurality of multi-core/single-core conversion modules are faced with each other.

7. The multi-core/single-core conversion module according to claim **1**, further comprising a plurality of adapter holders attached to the housing respectively, the plurality of adapter holders holding the second adapters,

wherein the closer to the lowermost tier, the more outward the adapter holder is located.

8. The multi-core/single-core conversion module according to claim **1**, further comprising an uppermost adapter holder, a lowermost adapter holder, and a middle adapter holder located between the uppermost adapter holder and the lowermost adapter holder, the uppermost adapter holder, the lowermost adapter holder and the middle adapter holder being attached to the housing,

wherein the middle adapter holder is located more outward than the uppermost adapter holder, and the lowermost adapter holder is located more outward than the middle adapter holder.

9. The multi-core/single-core conversion module according to claim **1**, further comprising a hook protruding from a bottom face of the housing.

10. The multi-core/single-core conversion module according to claim **1**, wherein the first adapter is fixed so as to penetrate through a wall provided at the first end of the housing.

11. The multi-core/single-core conversion module according to claim **1**, wherein the second adapters located on a same tier are made into one body.

12. A multi-core/single-core conversion apparatus comprising:

a plurality of multi-core/single-core conversion modules including the multi-core/single-core conversion module according to claim **1**; and

a base member supporting the plurality of multi-core/single-core conversion modules.

13. The multi-core/single-core conversion apparatus according to claim **12**,

wherein the base member provides a plurality of areas for placing the plurality of multi-core/single-core conversion modules thereon, the plurality of areas being arranged along a first direction, and

wherein the plurality of multi-core/single-core conversion modules are respectively placed on the plurality of areas along the first direction in such a way that adjacent lateral walls of the plurality of multi-core/single-core conversion modules are faced with each other.

14. The multi-core/single-core conversion apparatus according to claim **13**, wherein the plurality of areas for placing the conversion modules includes holes configured to engage with hooks provided on bottoms of the plurality of multi-core/single-core conversion modules.

15. The multi-core/single-core conversion apparatus according to claim **12**, wherein the base member includes an openable lid provided at one end thereof, the lid covering one ends of the plurality of multi-core/single-core conversion modules when the lid is closed.

16. The multi-core/single-core conversion apparatus according to claim **12**,

wherein the base member includes a first bottom panel that places the plurality of multi-core/single-core conversion modules thereon, and a second bottom panel that overlaps the first bottom panel thereon,

wherein the first bottom panel is slidable with respect to the second bottom panel, together with the plurality of multi-core/single-core conversion modules.

17. The multi-core/single-core conversion module according to claim **1**, wherein the lateral wall includes a bar portion located between the opening and the bottom end.

18. The multi-core/single core conversion module according to claim **1**, wherein the housing includes another lateral wall opposite to the lateral wall, and the another lateral wall includes an opening.

19. The multi-core/single core conversion module according to claim **1**, wherein the housing further includes a support that supports the removably attachable shutter, the support being provided inside the housing.

20. A multi-core/single-core conversion module comprising:

a first unit module comprising

a housing including a first end, a second end, and first and second lateral walls defining an inner space between the first end and the second end,

a first adapter attached to the first end of the housing, and

two or more second adapters attached to the second end of the housing;

a second unit module comprising

a housing including a first end, a second end, and first and second lateral walls defining an inner space between the first end and the second end,

a first adapter attached to the first end of the housing, and

two or more second adapters attached to the second end of the housing;

a multi-core optical connector inserted into the first adapter of the first unit module from the inner space of the housing;

a first single-core optical connector inserted into one of the second adapters of the first unit module from the inner space of the housing of the first unit module;

a second single-core optical connector inserted into one of the second adapters of the second unit module from the inner space of the housing of the second unit module; and

a plurality of optical fibers connecting the multi-core optical connector to the first and second single-core optical connectors with each other,

wherein the second adapters are arranged on the second end of each unit module across a plurality of tiers,

wherein the optical fiber connecting the multi-core optical connector with the second single-core optical connector with each other passes through an opening formed on the second lateral wall of the first unit module and an opening formed on the second lateral wall of the second unit module, and

wherein a removably attachable shutter is configured to close an opening of each of the first lateral walls of the housings in an attached state.

21. The multi-core/single-core conversion module according to claim **20**, further comprising a module coupling member having one end detachably attached to the lateral wall of the first unit module and the other end detachably attached to the lateral wall of the second unit module.

22. The multi-core/single-core conversion module according to claim **20**, further comprising an adapter holder attached to the housing so as to be pivotable around an axis line crossing a tier direction of the plurality of tiers to hold the second adapter for each tier.

* * * * *