US008873922B2

(12) **United States Patent**
Kowalczyk et al.

(10) **Patent No.: US 8,873,922 B2**
(45) **Date of Patent: Oct. 28, 2014**

(54) **FAN-OUT AND PARKING MODULE**

(75) Inventors: **Scott C. Kowalczyk**, Savage, MN (US); **Joshua M. Simer**, Chaska, MN (US); **Jerad D. Whitaker**, Richfield, MN (US); **Oscar Fernando Bran de León**, Belle Plaine, MN (US)

(73) Assignee: **ADC Telecommunications, Inc.**, Berwyn, PA (US)

(*) Notice: Subject to any disclaimer, the term of this patent is extended or adjusted under 35 U.S.C. 154(b) by 496 days.

(21) Appl. No.: **13/331,591**

(22) Filed: **Dec. 20, 2011**

(65) **Prior Publication Data**

US 2012/0189260 A1 Jul. 26, 2012

Related U.S. Application Data

(60) Provisional application No. 61/425,140, filed on Dec. 20, 2010.

(51) **Int. Cl.**
G02B 6/00 (2006.01)
G02B 6/44 (2006.01)

(52) **U.S. Cl.**
CPC ***G02B 6/44*** (2013.01)
USPC **385/135**; 385/137

(58) **Field of Classification Search**
USPC 385/135, 137
See application file for complete search history.

(56) **References Cited**

U.S. PATENT DOCUMENTS

7,198,409	B2	4/2007	Smith et al.	
7,233,731	B2	6/2007	Solheid et al.	
7,264,402	B2	9/2007	Theuerkorn et al.	
7,277,620	B2	10/2007	Vongseng et al.	
7,369,741	B2 *	5/2008	Reagan et al.	385/139
7,397,997	B2	7/2008	Ferris et al.	
7,509,016	B2	3/2009	Smith et al.	
7,512,304	B2	3/2009	Gronvall et al.	
7,715,679	B2	5/2010	Kowalczyk et al.	
7,756,379	B2	7/2010	Kowalczyk et al.	
8,538,228	B2 *	9/2013	Smith et al.	385/135
8,649,649	B2 *	2/2014	Smith et al.	385/136
2011/0222829	A1	9/2011	Loeffelholz et al.	
2013/0177284	A1 *	7/2013	Sievers et al.	385/135

* cited by examiner

Primary Examiner — Sung Pak

(74) *Attorney, Agent, or Firm* — Merchant & Gould P.C.

(57) **ABSTRACT**

The present disclosure relates to a telecommunications apparatus that includes a fan-out module main body adapted for connection to a rack. The telecommunications apparatus also includes a fan-out block attached to the fan-out module main body. The telecommunications apparatus also includes a multi-fiber cable segment. The multi-fiber cable segment includes first and second strength members. The first and second strength members are anchored to the fan-out block. The telecommunications apparatus further includes a plurality of pigtail cable segments each including a jacket containing one of the optical fibers and a plurality of flexible strength members positioned inside the jacket. The flexible strength members of the pigtail cable segments are anchored to the fan-out block, the optical fibers being fanned out from the multi-fiber cable segment to the pigtail cable segments within the fan-out block. The telecommunications apparatus also includes a plurality of single fiber connectors mounted to free ends of the pigtail cable segments.

13 Claims, 14 Drawing Sheets

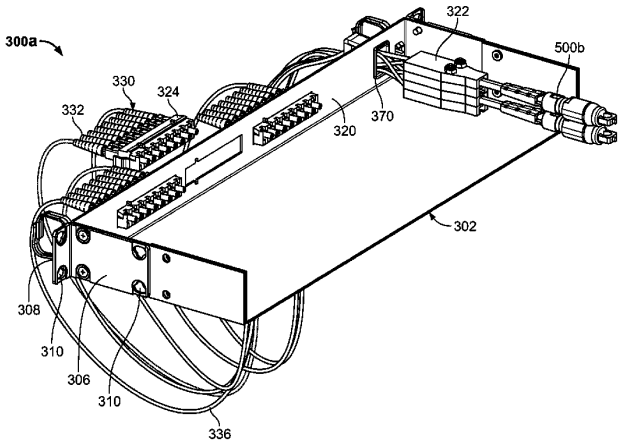

CommScope Ex. 1032

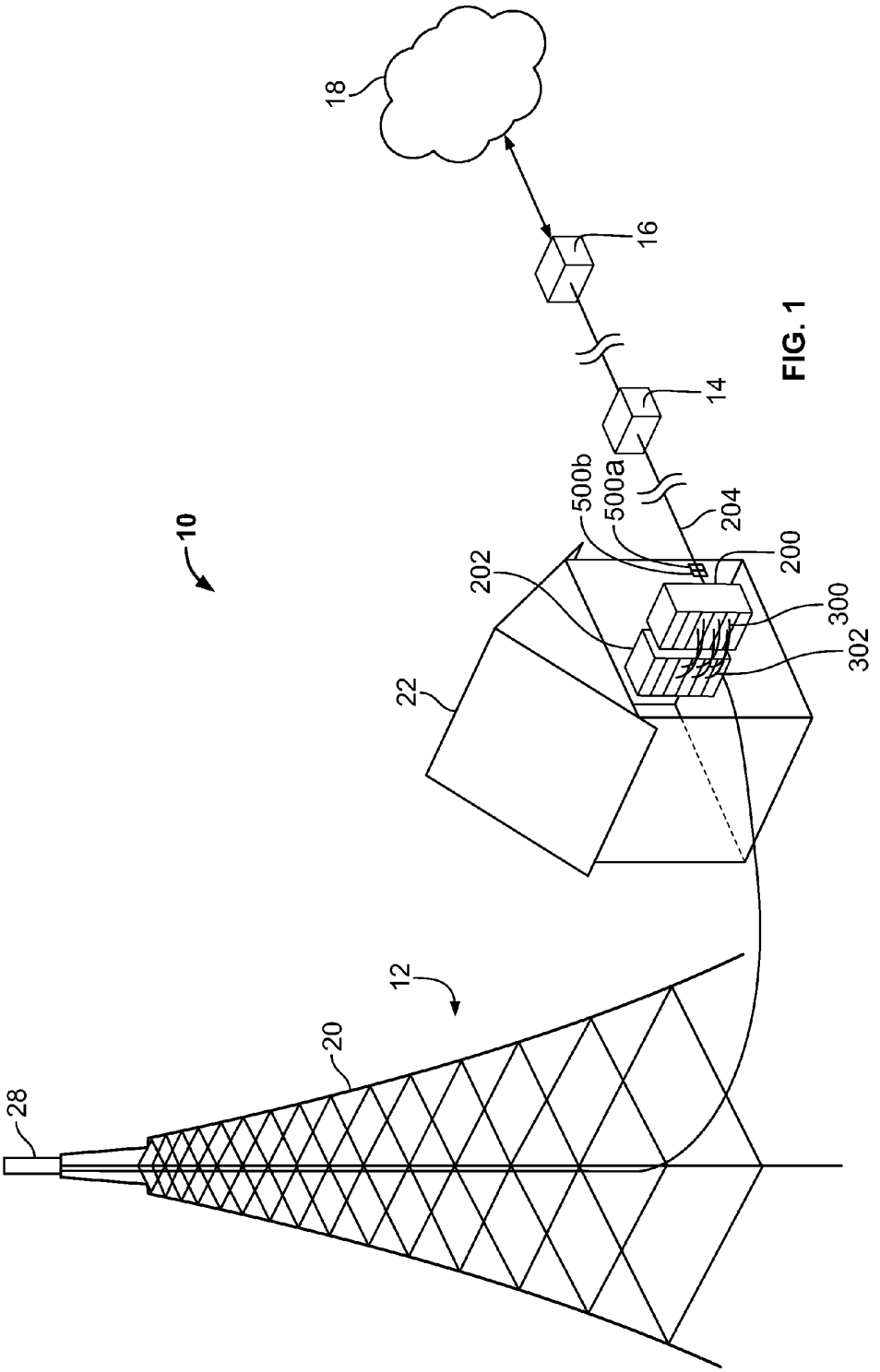

FIG. 1

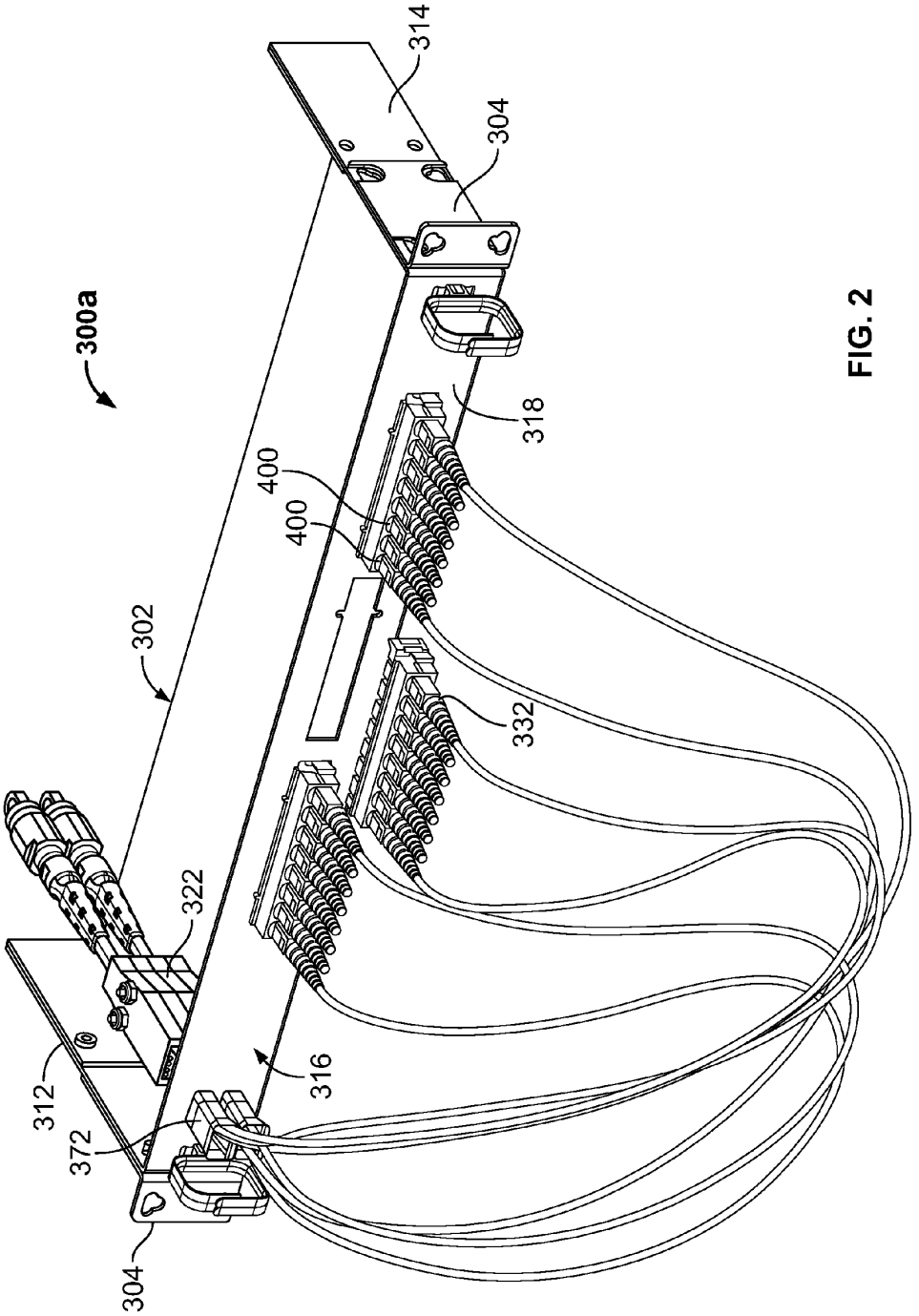

FIG. 2

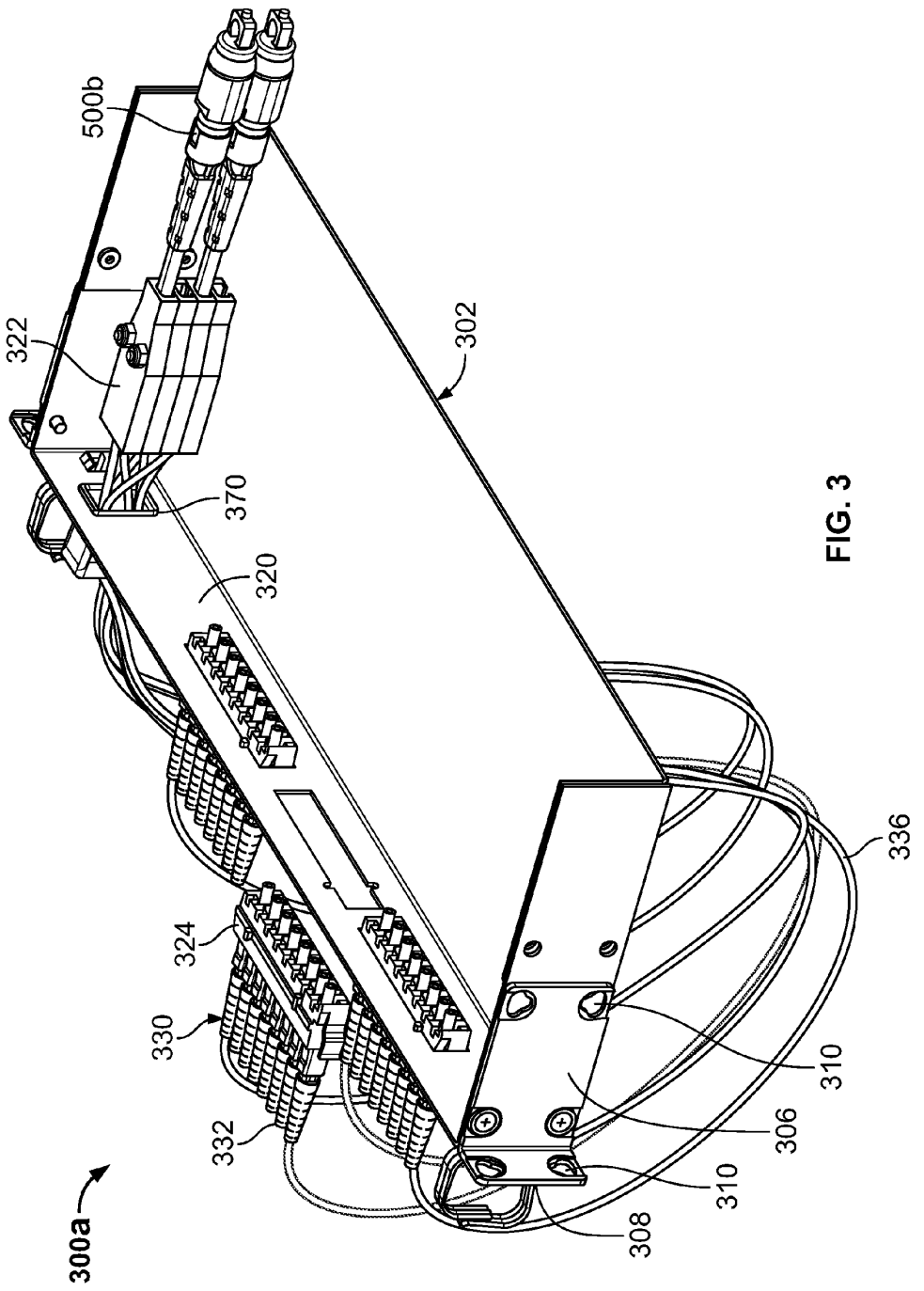

FIG. 3

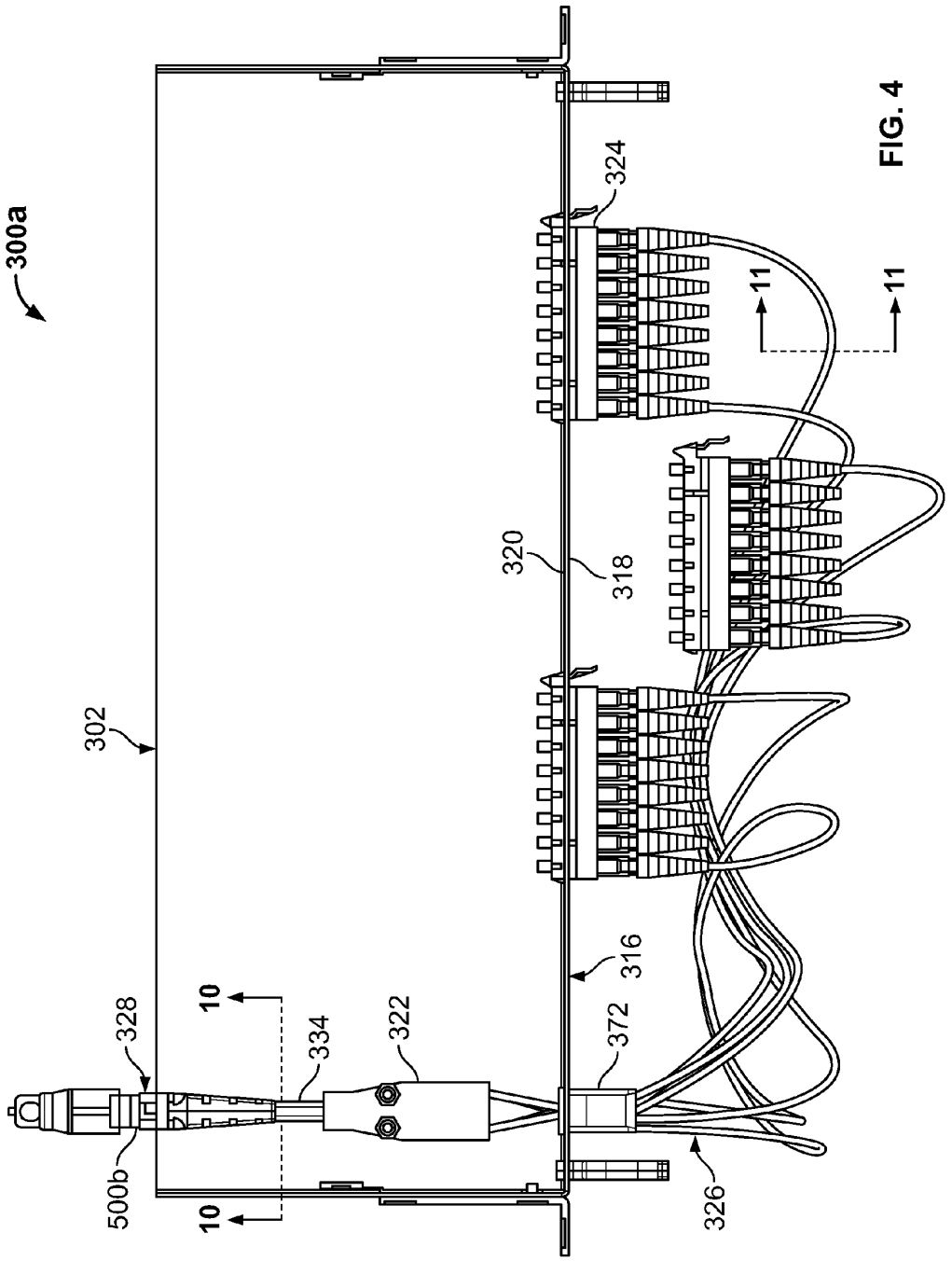

FIG. 4

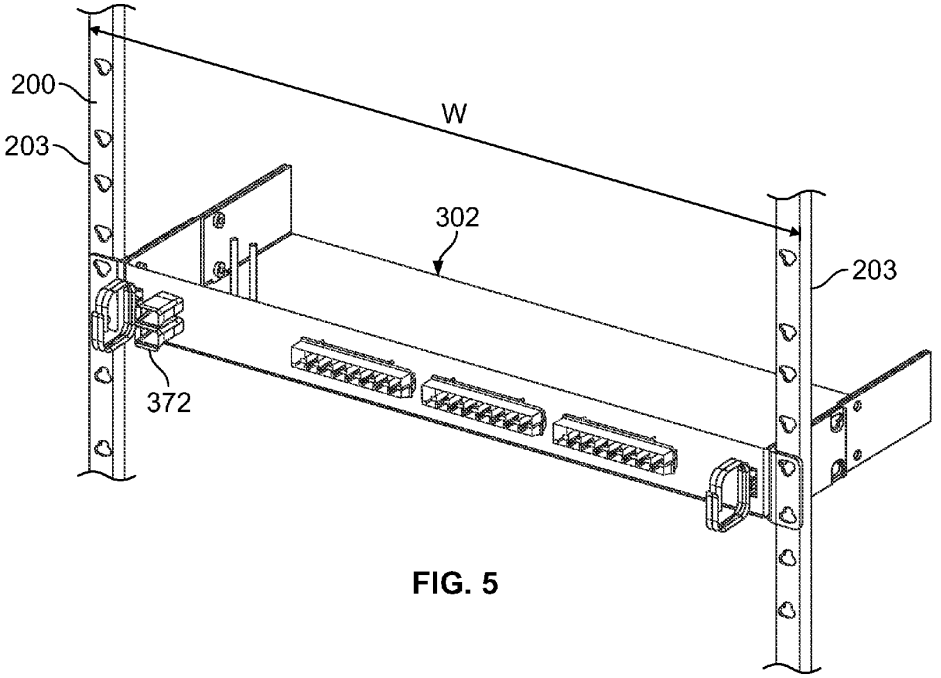

FIG. 5

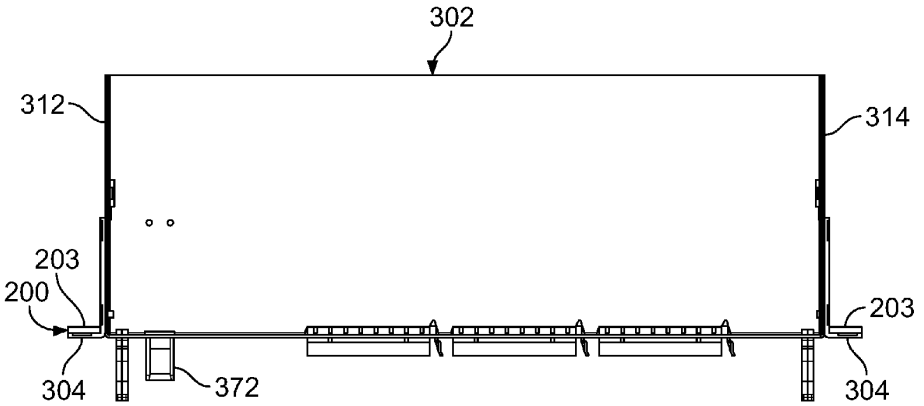

FIG. 6

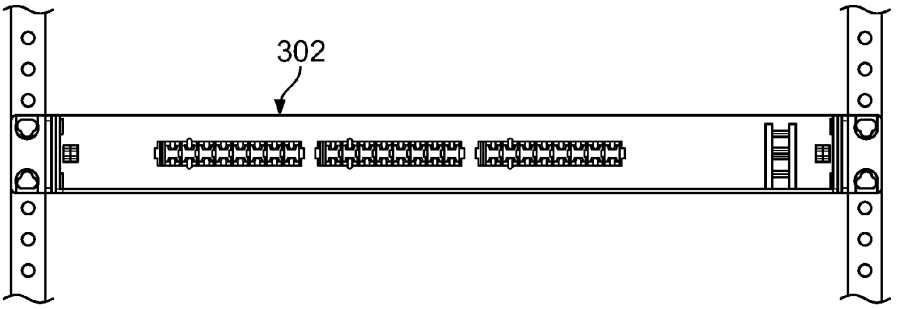

FIG. 7

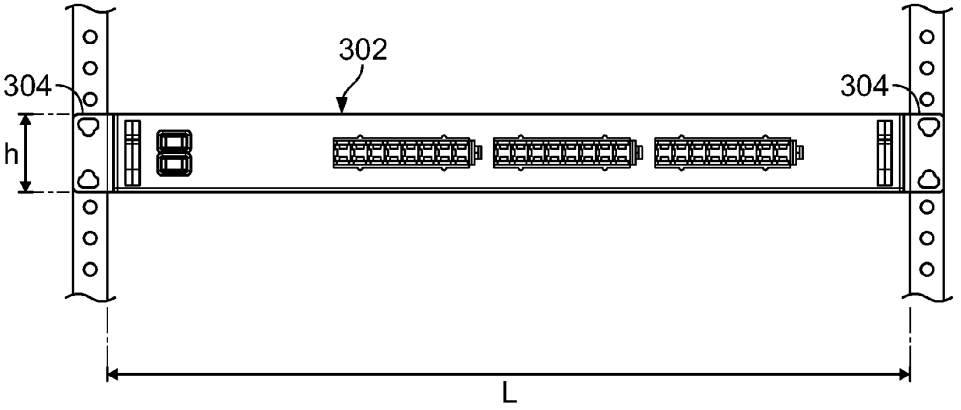

FIG. 8

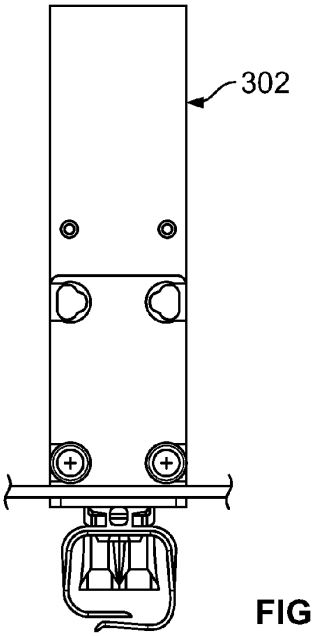

FIG. 9

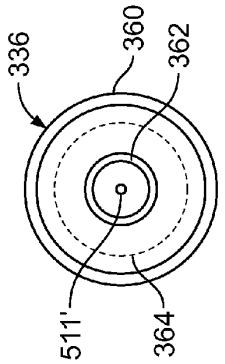

FIG. 11

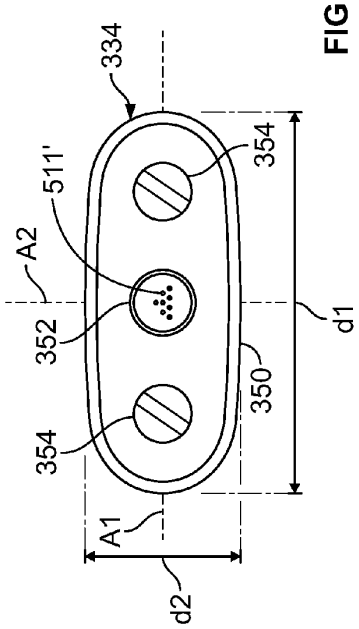

FIG. 10

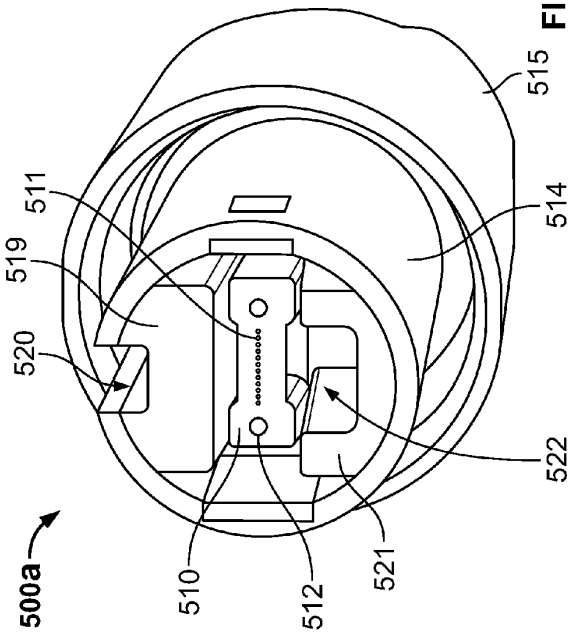

FIG. 12

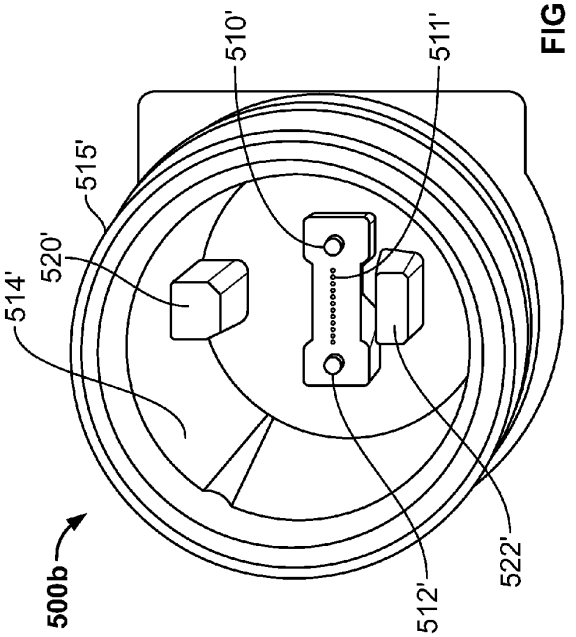

FIG. 13

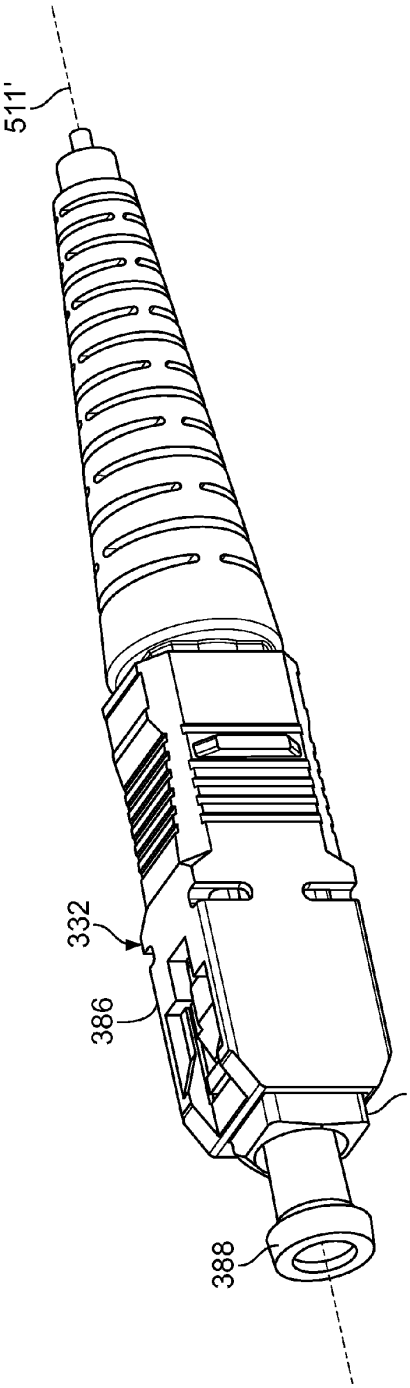

FIG. 14

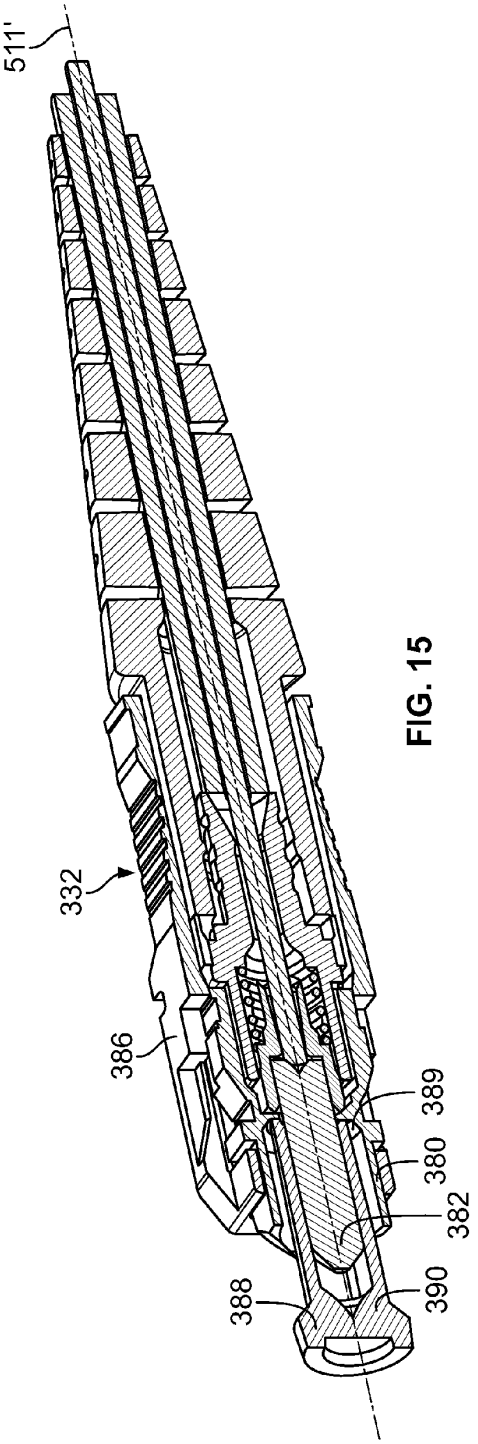

FIG. 15

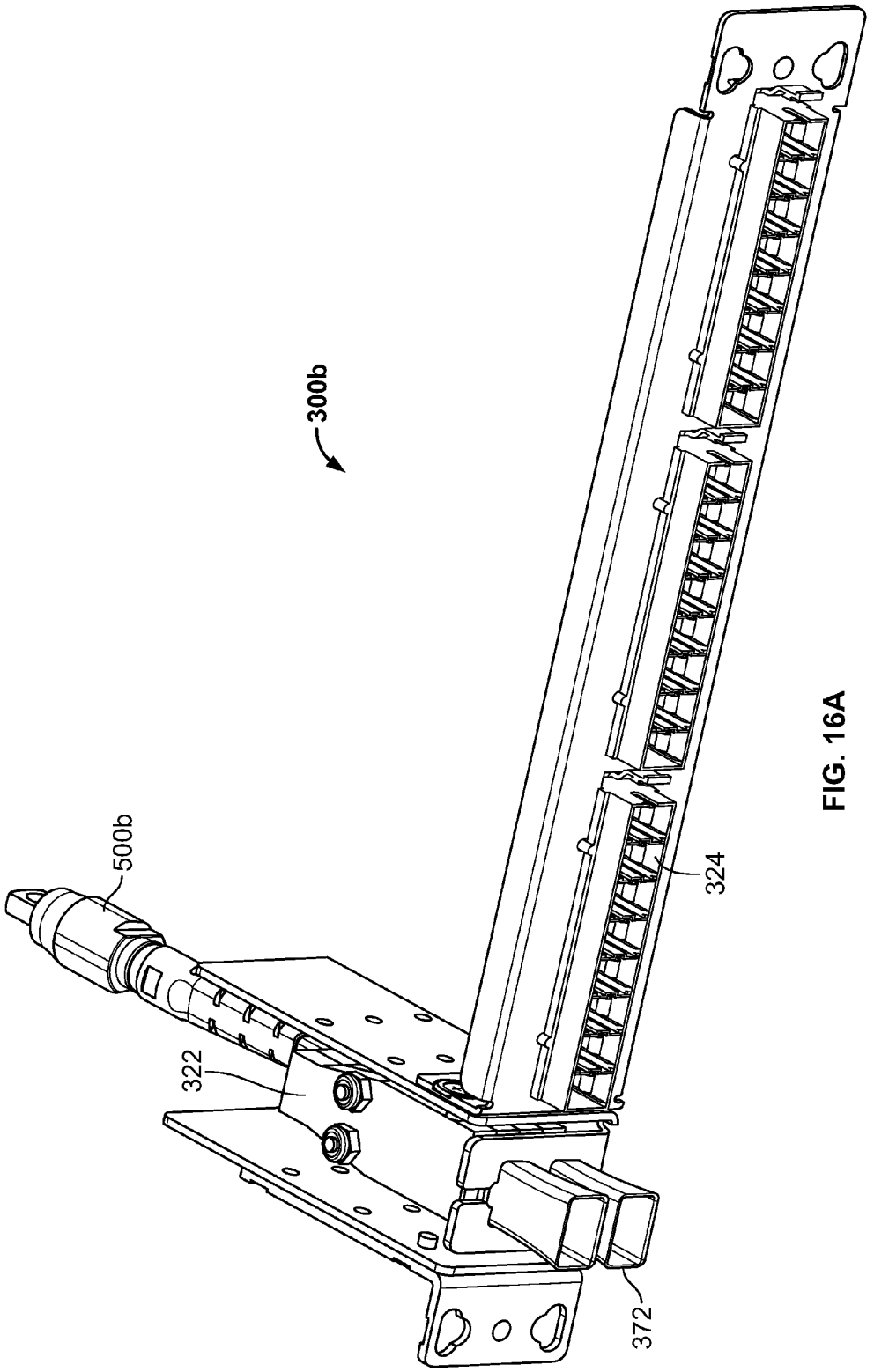

FIG. 16A

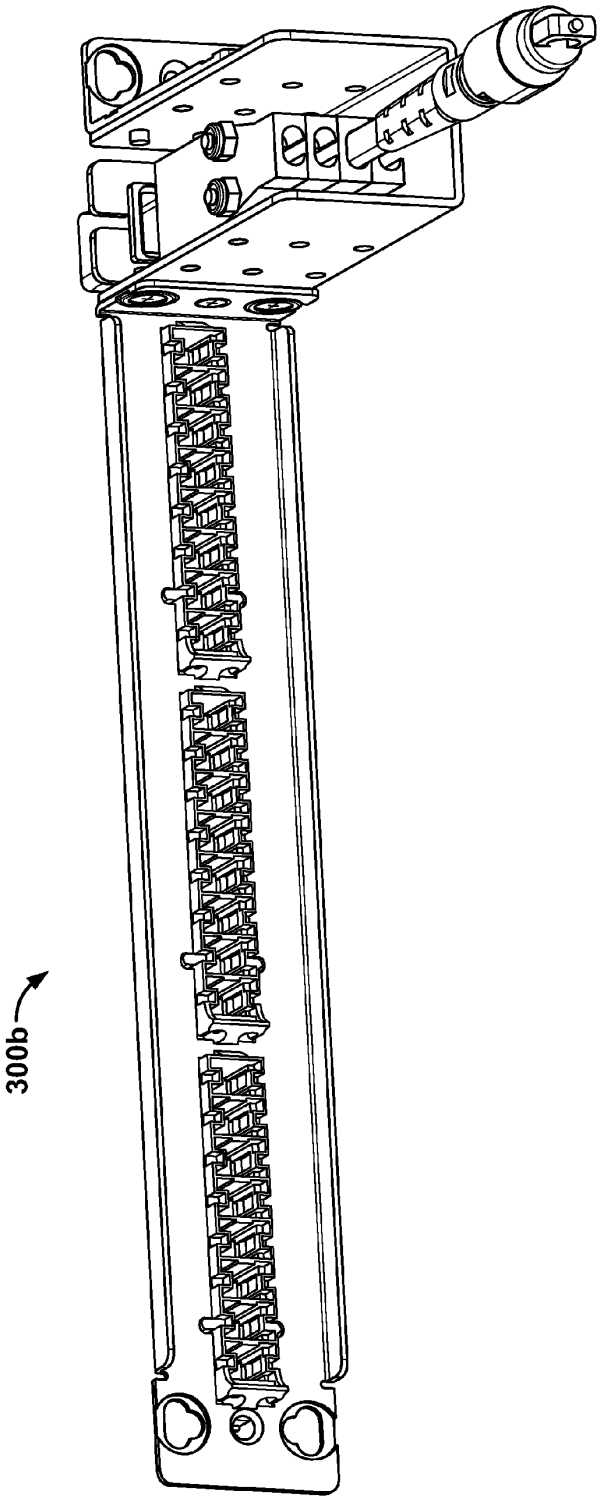

FIG. 16B

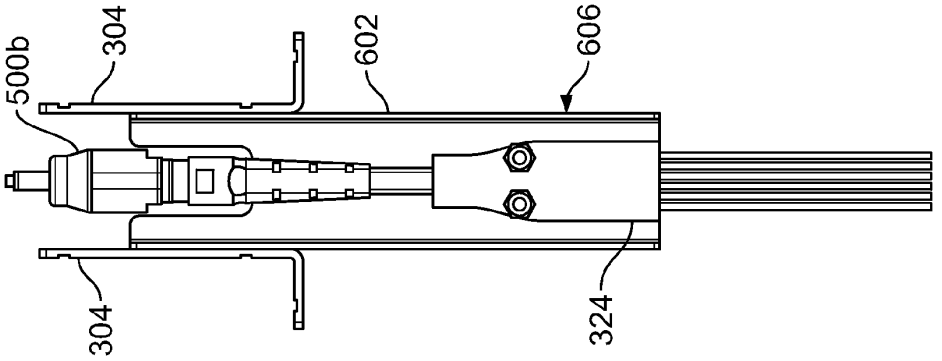

FIG. 18

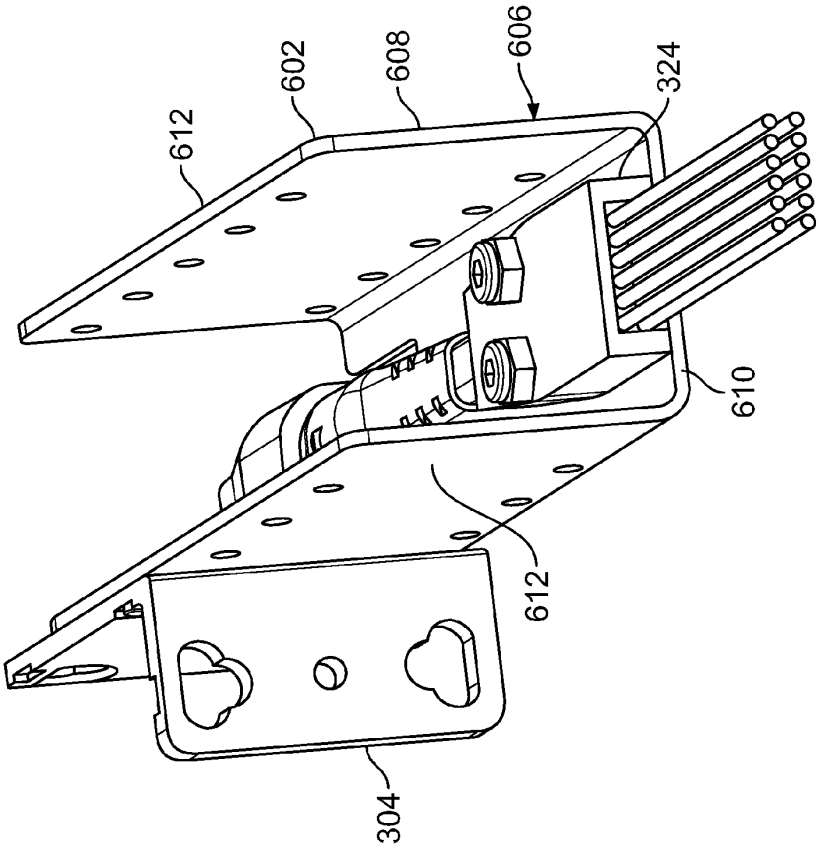

FIG. 17

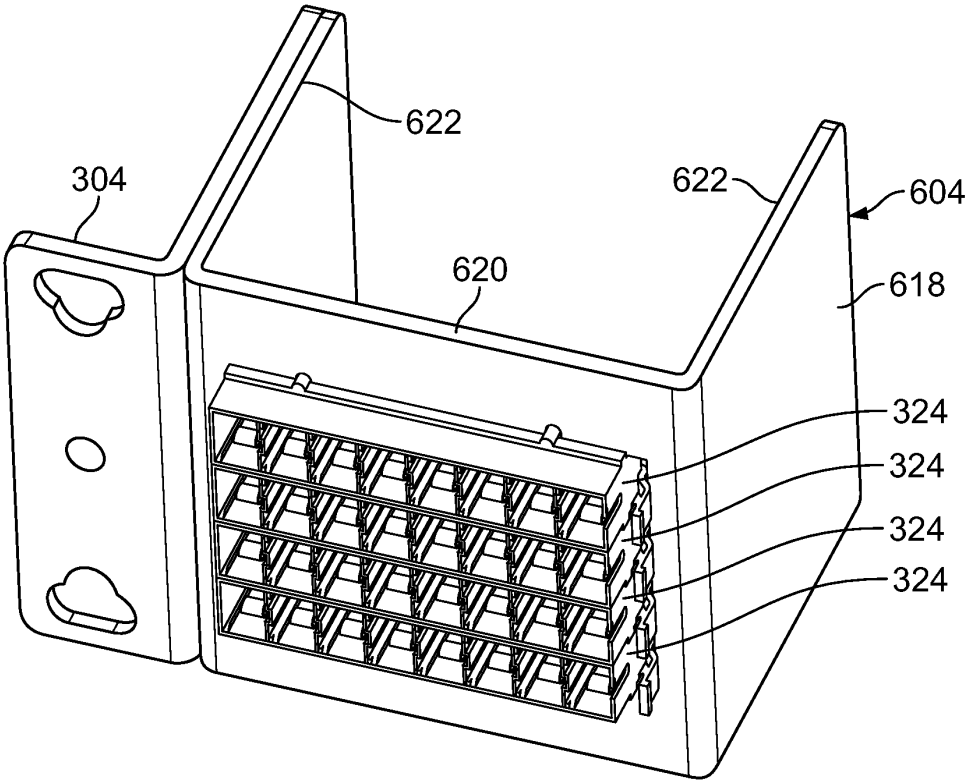

FIG. 19

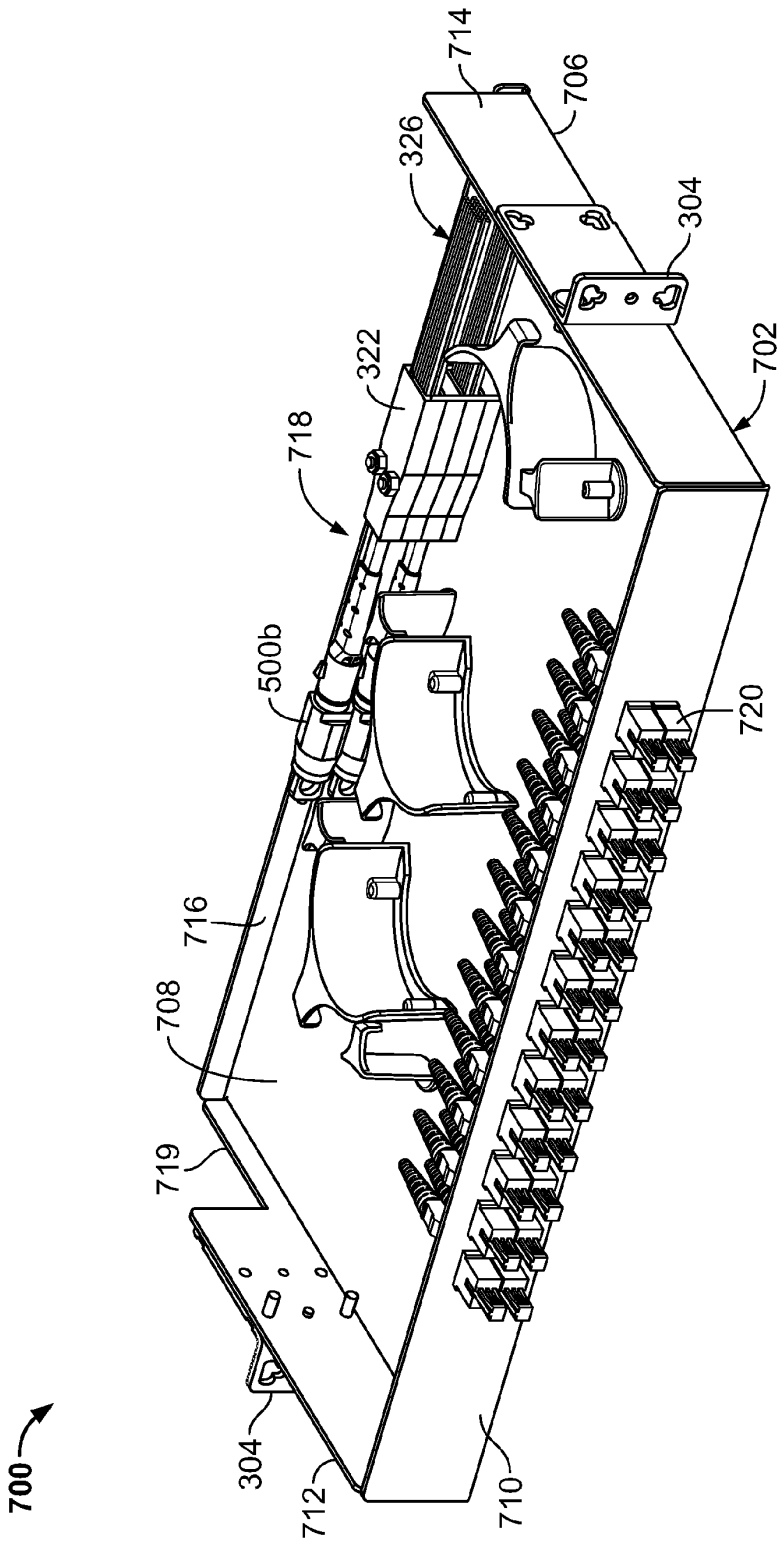

FIG. 20

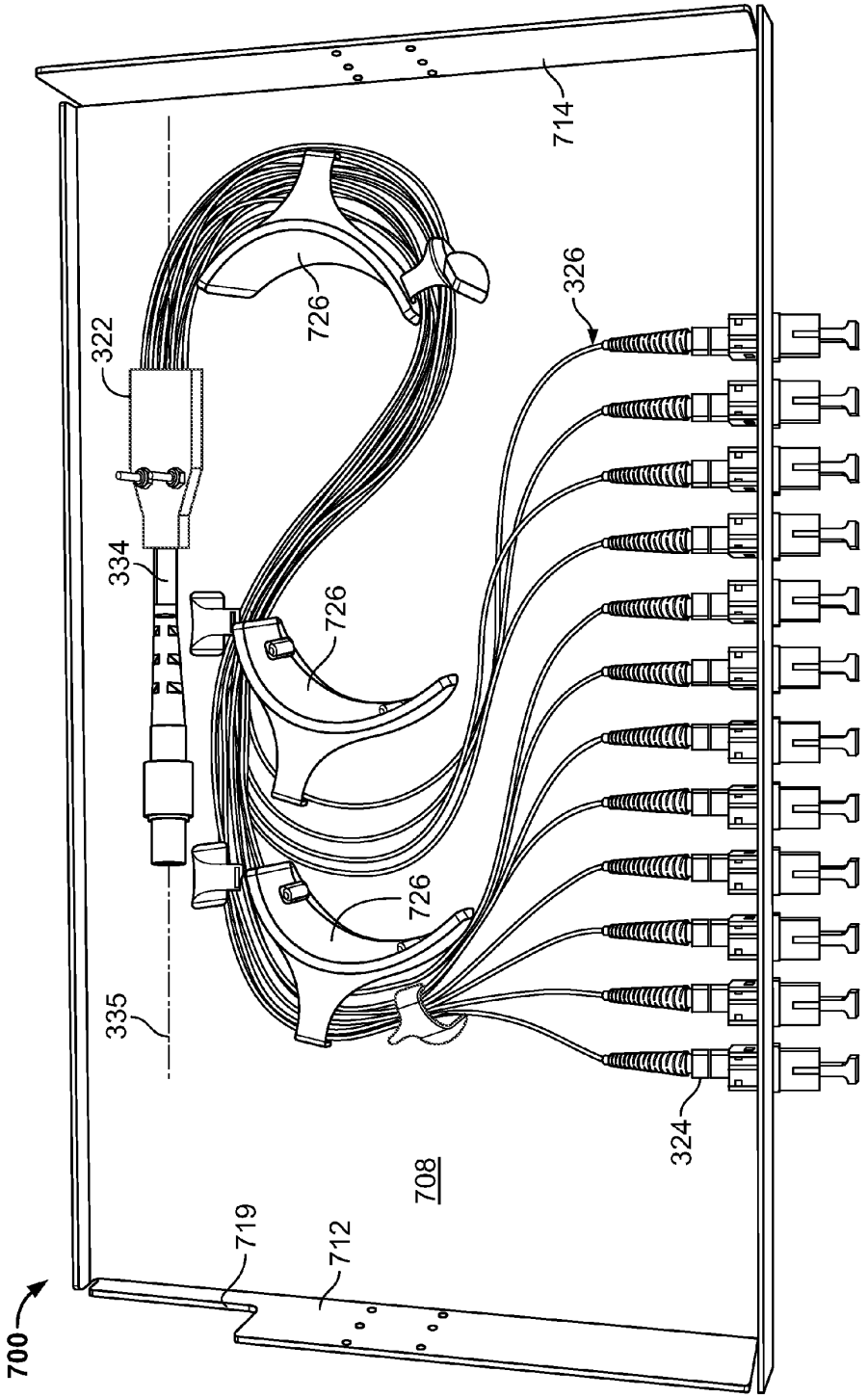

FIG. 21

FAN-OUT AND PARKING MODULE

CROSS-REFERENCE TO RELATED APPLICATION

The present application claims the benefit of U.S. Provisional Patent Application Ser. No. 61/425,140, filed Dec. 20, 2010, which application is hereby incorporated by reference in its entirety.

BACKGROUND

A goal of service providers in the telecommunications industry is to deliver high bandwidth communication capabilities to customers in a cost effective manner. In general, improvements relating to systems for managing cables and providing connections between cables/telecommunications equipment assist service providers in achieving this goal.

SUMMARY

Certain aspects of the disclosure relate to telecommunication equipment and arrangements that enhance cable management, ease of use, and scalability. Aspects of the present disclosure can be used in fiber-to-the-cell-tower applications as well as other FTTX applications (e.g., fiber-to-the-premises, fiber-to-the-node, etc.).

A variety of additional inventive aspects will be set forth in the description that follows. The inventive aspects can relate to individual features and to combinations of features. It is to be understood that both the forgoing general description and the following detailed description are exemplary and explanatory only and are not restrictive of the broad inventive concepts upon which the embodiments disclosed herein are based.

DRAWINGS

FIG. **1** is a schematic representation of a telecommunications network having exemplary features of aspects in accordance with the principles of the present disclosure;

FIG. **2** is a front perspective view of a fan-out and parking module in accordance with the principles of the present disclosure;

FIG. **3** is a rear perspective view of the fan-out and parking module of FIG. **2**;

FIG. **4** is a top view of the fan-out and parking module of FIG. **2**;

FIG. **5** is a front perspective view of the fan-out and parking module of FIG. **2** with the fiber optic cable assembly removed;

FIG. **6** is a top view of the fan-out and parking module of FIG. **5**;

FIG. **7** is a rear view of the fan-out and parking module of FIG. **6**;

FIG. **8** is a front view of the fan-out and parking module of FIG. **6**;

FIG. **9** is a side view of the fan-out and parking module of FIG. **6**;

FIG. **10** is a cross-sectional view taken along section line **10-10** of FIG. **4**;

FIG. **11** is cross-sectional view taken along section line **11-11** of FIG. **4**;

FIGS. **12** and **13** show ruggedized multi-fiber optic connectors that can be used in systems in accordance with the principles of the present disclosure;

FIG. **14** is a perspective view of a fiber optic connector having a ferrule on which a dust cap is mounted;

FIG. **15** is a cross-sectional view of the fiber optic connector taken along a cross-sectional plane that extends along a central longitudinal axis of the fiber optic connector and that bisects the fiber optic connector;

FIGS. **16**A and **16**B show an another fan-out and parking module in accordance with the principles of the present disclosure;

FIG. **17** shows a fan-out module in accordance with the principles of the present disclosure;

FIG. **18** is another fan-out module in accordance with the principles of the present disclosure;

FIG. **19** shows a parking module in accordance with the principles of the present disclosure;

FIG. **20** is a front perspective view of a another fan-out module in accordance with the principles of the present disclosure; and

FIG. **21** is a top view of the fan-out module of FIG. **20**.

DETAILED DESCRIPTION

Reference will now be made in detail to the exemplary aspects of the present disclosure that are illustrated in the accompanying drawings. Wherever possible, the same reference numbers will be used throughout the drawings to refer to the same or like structure.

Referring now to FIG. **1**, a schematic representation of a telecommunications network **10** is shown. In the depicted embodiment, the telecommunications network **10** is a cellular network **10**. The cellular network **10** includes a cell site **12**, a demarcation point **14** (e.g., a splice vault), a backhaul **16** and a core network **18**.

The cell site **12** creates an area of telecommunications coverage (i.e., a cell) in the cellular network **10**. In one embodiment, the cell site **12** includes a cell tower or mast **20** and a but **22** enclosing telecommunications equipment that is in communication with the tower **20**. For example, the but **22** can enclose active equipment (e.g., multiplexing devices, de-multiplexing devices, routers, optical-to-digital converters, etc.) that connects to remote transceivers **28** (e.g., remote radio heads) mounted on the cell tower **20**. The remote transceivers **28** are adapted to transmit and receive signals to and from devices (e.g., mobile phones, smart-phones, devices with wireless internet connectivity, etc.) of subscribers to the cellular network **10**. In one embodiment, the tower **20** may include an antenna or antennas. The remote transceivers **28** may be integrated into the antenna or antennas.

Referring to FIG. **1**, the but **22** is shown housing an equipment mounting rack **200** and an equipment cabinet **202**. The active equipment cabinet **202** can house active equipment such as multiplexing devices, de-multiplexing devices, routers, optical-to-digital converters. The equipment in the cabinet **202** connects to the remote transceivers **28**. The equipment mounting rack **200** provides a location for mounting equipment **300** adapted to interface with cables **204** routed from the demarcation point **14** to the but **22**. In certain embodiments, the rack **200** can include a frame having different widths W (e.g., a "19 inch" rack typically has an 18.31 center-to-center spacing between fastener openings and a "24 inch" typically has a 22.31 inch center-to-center spacing between fastener openings). The frame can include spaced-apart vertical mounting rails **203** (see FIGS. **5** and **6**) defining the fastener openings for mounting equipment to the rack. In one embodiment, the cables **204** can include multi-fiber cables each including a jacket enclosing a plurality of optical fibers. In one embodiment, the cables **204** can be terminated

by ruggedized multi-fiber connectors **500***a*. The equipment **300** mounted to the rack **200** can include ruggedized multi-fiber connectors **500***b* that interconnect with the ruggedized multi-fiber connectors **500***a*. The equipment **300** can also include fan-out devices and a plurality of fiber optic cords **302** (e.g., patch cords, connectorized pigtails, etc.) that extend from the rack **200** to the cabinet **202**.

In operation of the network, signals are transmitted from the core network **18** through the backhaul **16** to the demarcation point **14**. From the demarcation point **14**, the signals are transmitted through the cables **204** to the equipment **300** at the rack **200**. The fiber optic cords **302** carry the signals from the rack **200** to the equipment in the cabinet **202**. The signals are then directed from the equipment in the cabinet **202** to the remote transceivers **28** which transmit the signals to subscribers of the cellular network. The transceivers **28** are also capable of receiving signals from the subscribers. The received signals are directed to the equipment of the cabinet **202**. The fiber optic cords **302** carry the signals from the cabinet **202** to the equipment **300** at the rack **200**. The cables **204** then carry the signals from the rack **200** to the demarcation point **14**. The signals are subsequently carried through the backhaul **16** to the core network **18**.

FIGS. **2-9** show a fan-out and parking module **300***a* that is an example of the type of equipment **300** that can be mounted on the rack **200**. In the depicted embodiment, the fan-out and parking module **300***a* is be configured to occupy only one rack unit of the rack **200** and has a height h less than or equal to 1.75 inches. The fan-out and parking module **300***a* includes a module main body **302** which also can be referred to as a frame, support structure, member, or like terms. The module main body **302** is secured to the rack **200** by universal brackets **304** fastened to opposite ends **312**, **314** of the module main body **302**. Each of the universal brackets **304** includes a long leg **306** arranged perpendicularly relative to a short leg **308**. Fastener openings **310** are defined by the long and short legs **306**, **308**. The fastener openings **310** are adapted to receive fasteners for attaching the legs **306**, **308** to either the module main body **302** or the rails **203** of the rack **200**. By attaching the long legs **306** to the module main body **302** as shown, the fan-out and parking module **300***a* can be connected to a standard 19 inch rack by fastening the short legs **308** to the rails **203**. In contrast, the fan-out and parking module **300***a* can be attached to a standard 23 inch rack by attaching the short legs **308** to the module main body **302** and the long legs **306** to the rails **203** of the rack **200**.

Referring still to FIGS. **2-9**, the module main body **302** includes a front panel **316** having a length L that extends between the opposite ends **312**, **314** of the module main body **302**. When the fan-out and parking module **300***a* is mounted to the rack **200**, the length L extends across the width W of the rack **200**. The front panel **316** has a front side **318** positioned opposite from a back side **320**. One or more fan-out blocks **322** are mounted to the module main body **302** at a location behind the back side **320** of the front panel **316**. One or more parking blocks **324** are mounted to the front side **318** of the front panel **316**. The parking blocks **324** can also be referred to as connector storage sub-modules. The fan-out blocks **322** and the parking blocks **324** are adapted to support and manage various portions of a fiber optic cable assembly **326**. The fiber optic cable assembly **326** includes a first end **328** having the ruggedized multi-fiber connector **500***b* (e.g., a 12 fiber connector) and a second end **330** having a plurality of single fiber connectors **332** that are managed/stored at the parking blocks **324**. The fiber optic cable assembly **326** also includes a segment of ruggedized cable **334** that extends from the ruggedized multi-fiber connector **500***b* to the fan-out block **322**. The fiber optic cable assembly **326** further includes a plurality (e.g., twelve) of segments of pigtail cable **336** that extend from the fan-out blocks **322** to the single fiber connectors **332**. The fiber optic cable assembly **326** additionally includes a plurality of separate optical fibers **511'** that extend continuously in an uninterrupted manner from multi-fiber connector **500***b*, through the segment of ruggedized cable **334**, the fan-out block **322** and the segments of pigtail cable **336** to the single fiber connectors **332**.

The multi-fiber connectors **500***a*, **500***b* are shown at FIGS. **12** and **13**. The connector **500***a* can be sized and shaped to interface with the second connector **500***b* without an intermediate fiber optic adapter. For example, the first connector **500***a* can define a plug and the second example connector **500***b* can define a receptacle that is configured to receive the plug. In some implementations, the plug and receptacle are threaded together. In accordance with other aspects of the present disclosure, other types of connectors (e.g., non-ruggedized MPO/MFC connectors could be used).

The connector plug **500***a* includes a ferrule **510** at which one or more optical fibers **511** of the cable **204** are terminated. In some implementations, the ferrule **510** terminates multiple (e.g., two, eight, twelve, sixteen, twenty-four, forty-eight, seventy-two, etc.) optical fibers **511**. In the example shown, the ferrule **510** terminates twelve optical fibers **511**. The ferrule **510** defines keying openings **512** at either side of the optical fibers **511**. The ferrule **510** is enclosed within a shroud **514** that defines keying and latching features. The shroud **514** and ferrule **510** extend forwardly of a connector base **515**. The shroud **514** extends beyond the ferrule **510**. The shroud **514** defines a first keying channel **520** and a second keying channel **522** above and below the ferrule **510**, respectively.

The connector receptacle **500***b* also includes a ferrule **510'** at which one or more of the optical fibers **511'** of the fiber optic cable assembly **326** are terminated. In some implementations, the ferrule **510'** terminates multiple (e.g., two, eight, twelve, sixteen, twenty-four, forty-eight, seventy-two, etc.) optical fibers **511**. In the example shown, the ferrule **510'** terminates twelve optical fibers **511'**. The ferrule **510'** defines keying projections **512'** at either side of the optical fibers **511'**. The projections **512'** are configured to be inserted into the keying openings **512** of the plug ferrule **510** to facilitate alignment of the ferrules **510**, **510'**.

The receptacle ferrule **510'** is enclosed within a connector body **515'** defines a cavity **514'** that is sized and shaped to receive the shroud **514** of the plug **500**. The connector base **515'** is configured to surround the shroud **514**. In some embodiments, the connector base **515'** latches, screws, or otherwise secures to the shroud **514** to retain the plug **500** and the receptacle **500'** in a mated configuration. A first keying projection **520'** and a second keying projection **522'** are positioned within the cavity **514'** above and below the ferrule **510'**, respectively. In some implementations, the first and second keying projections **520'**, **522'** have different shapes and/or sizes to facilitate finding the correct orientation of the plug and receptacle.

In some implementations, the connectors **500***a*, **500***b* include an environmental seal when interfaced together to protect the ferrules **511**, **511'** from dust, dirt, or other contaminants. In some implementations, an environmental dust cap can be mounted to the connectors **500***a*, **500***b* to protect the ferrules **511**, **511'** prior to deployment of the connectors **500***a*, **500***b*. In other embodiments, the connector **500***a* can be mounted to the fiber optic cable assembly **326** and the connector **500***b* can be mounted to the cable **204**.

Additional details regarding the example connector plug **500***a* and receptacle **500***b* can be found in U.S. Pat. No.

7,264,402 to Theuerkorn et al., issued Sep. 4, 2007, and titled Multi-fiber optic receptacle and plug assembly, the disclosure of which is hereby incorporated by reference herein.

FIG. **10** is a cross-sectional view taken along a cross-section line cut through the segment of ruggedized cable **334**. The ruggedized cable **334** includes an outer jacket **350** having a flattened configuration. The profile of the outer jacket **350** (shown at FIG. **10**) defines a major axis A**1** and a minor axis A**2**. The profile of the outer jacket **350** has a dimension d**1** that extends along the major axis A**1** and a dimension d**2** that extends along the minor axis A**2**. The dimension d**1** is larger than the dimension d**2** such that the profile is elongated along the major axis A**1**. The ruggedized cable **334** includes a central buffer tube **352** containing the optical fibers **511'**. The ruggedized cable **334** also includes reinforcing members **354** positioned on the major axis A**1** on opposite sides of the buffer tube **352**. In one embodiment, the reinforcing members **354** are reinforcing rods including fiber glass embedded in an epoxy matrix. First ends of the reinforcing members **354** are anchored (e.g., adhesively bonded, crimped, etc.) to the housing of the connector **500***b* and opposite second ends of the reinforcing members **354** are anchored (e.g., adhesively bonded, crimped, etc.) to one of the fan-out block **322**.

FIG. **11** is a cross-sectional view taken along a cross-section line cut through one of the segments of pigtail cable **336**. The pigtail cable **336** includes an outer jacket **360** having a round configuration. In one embodiment, the outer jacket **360** has an outer diameter less than or equal to 2 millimeters. The pigtail cable **336** also includes an optional buffer tube **362** (e.g., a loose or tight 900 micron diameter buffer tube) containing one of the optical fibers **511'**. A layer of flexible strength members **364** (e.g., aramid yarn) is provided between the buffer tube **362** and the outer jacket **360**. First ends of the strength members **364** are anchored (e.g., adhesively bonded, crimped, etc.) to one of the fan-out blocks **322** and second ends of the strength members **364** are anchored (e.g., adhesively bonded, crimped, etc.) to the housing of the corresponding single fiber connector **332**.

The fan-out blocks **322** are mounted (e.g., attached with fasteners or other means) to the module main body **302**. The fan-out block **322** functions to anchor the second end of the ruggedized cable **334** and the first ends of the pigtail cables **336** to the module main body **302**. The fan-out block **322** also functions to fan-out (e.g., guide, direct, separate, etc.) the fibers **511'** from the buffer tube of the ruggedized cable **334** to the individual pigtail cables **336**.

Referring back to FIGS. **2-4**, the front panel **316** of the module main body **302** defines one or more cable pass-through openings **370** that extends through the front panel **316** in a back-to-front direction. One or more strain relief boots **372** are mounted to the front side **318** of the front panel **316**. The boots **372** project forwardly from the front side **318** of the front panel **316** and each include a passage **374** that aligns with a corresponding one of the cable pass-through openings **370**. The pigtail cables **336** are routed forwardly from the fan-out blocks **322** through the cable pass-through openings **370** and the boots **372** to the front of the front panel **316**. The pigtail cables **336** are then routed to the parking blocks **324** at the front side of the front panel **316** where the single fiber connectors **332** are held. Each boot **372** receives a plurality of the pigtail cables **336** and has a flexible configuration adapted for distributing side loading across an extended length to protect the fibers **511'** from being bent to sharply when the pigtail cables **336** are pulled downwardly, upwardly or laterally relative to the module main body **302**.

FIGS. **14** and **15** show one of the single fiber connectors **332** which is depicted as a standard SC style connector. The single fiber connector **332** includes an inner housing **380** supporting a cylindrical ferrule **382** supporting the end of one of the fibers **511'**. The ferrule defines an axis **384** and is movable relative the inner housing **380** along the axis **384**. The ferrule **382** is spring biased relative to the inner housing **380** toward an outer axial position. The single fiber connector **332** also includes an outer release sleeve **386** (e.g., a grip housing) that is mounted over the inner housing **380**. The outer release sleeve **386** is moveable relative to the inner housing **380** along the axis **384** and is pulled back relative to the inner housing **380** to release the connector **332** from a standard SC fiber optic adapter.

When the connector **332** is not in use, a polished end face of the ferrule **382** is preferably protected by a dust cap **388**. The dust cap **388** is generally cylindrical and includes an open end **389** positioned opposite from a closed end **390**. The open end **389** fits over the ferrule **382** such that an end portion of the ferrule is received within the dust cap **388** with the polished end face opposing the closed end **390** of the dust cap **388**. The dust cap **388** is secured to the ferrule **382** by a friction fit with an inner surface of the dust cap **388** engaging a circumference of the ferrule **382** such that a circumferential seal is formed between the ferrule **382** and a side wall of the dust cap **388**.

The parking blocks **324** can be secured to the front panel **316** by releasable connections that allow the parking blocks to easily be connected and disconnected from the front panel **316** while the connectors **332** are concurrently held by the connector blocks **324**. In the depicted embodiment, the parking blocks **324** can be connected to the front panel **316** by snap-fit connections. For example, the parking blocks **324** can include latches and/or tabs that snap within corresponding openings defined by the front panel **316**. Example parking systems suitable for use in the system disclosed herein are disclosed in U.S. Pat. Nos. 7,198,409; 7,277,620; and 7,233,731, which are hereby incorporated by reference in their entireties.

The parking blocks **324** each include a plurality of connector holders **400** each adapted for holding one of the fiber optic connectors **332**. In a preferred embodiment, the dust caps **388** remain on the ferrules **382** of the connectors **332** while the connectors are being held by the connector holders **400**. In a preferred embodiment, the connector holders **400** are not fiber optic adapters and are not capable of optically connecting two of the fiber optic connectors **332** together. As shown at FIG. **2**, the connector holders **400** hold the connectors **332** such that boots of the connectors **332** project outwardly from the front panel **316** at least partially in a forward direction. In one embodiment, the connector holders **400** hold the connectors **332** with their axes **384** horizontal and perpendicular to the front panel **316**.

In use of the fan-out and parking module **300***a*, the module **300***a* is mounted to the rack **200** with the connectors **332** stored in the parking blocks **324**. The connector **500***b* is connected to the connector **500***a* so that the optical fibers **511'** of the fiber optic cable assembly **326** are place in communication with the backhaul. To add a subscriber to the network, one of the connectors **332** is removed from its corresponding parking block **324** and the corresponding segment of pigtail cable **336** is routed from the rack **200** to the cabinet **202**. At the cabinet **202**, the dust cap **388** is removed from the ferrule of the connector **332** and the connector is connected to a piece of equipment (e.g., a multiplexer) on at the cabinet **202**. In a preferred embodiment, the segments of pigtail cable **336** are long enough to be routed from the rack **200** to the cabinet **202** without needing any intermediate patch cords. To disconnect a subscriber from the network, the connector **332** corresponding to the subscriber's line can be disconnected from the

equipment at the cabinet **202**. After the connector **332** has been disconnected from the equipment, the dust cap **388** can be returned to the ferrule and the connector can be plugged back into one of the parking blocks **324** at the fan-out and parking module **300***a*.

FIGS. **16**A and **16**B shows an alternative fan-out and parking module **300***b* in accordance with the principles of the present disclosure. Similar to the fan-out and parking module **300***a*, the fan-out and parking module **300***b* includes the fan-out blocks **322**, the parking blocks **324** and the fiber optic cable assembly **326** including the multi-fiber connector **500***b* at one end and a plurality of single fiber connectors **332** at the opposite end. The fan-out and parking module **300***b* includes a module main body **302'** having a U-shaped channel for receiving the fan-out blocks **322**. The blocks **322** are mounted in a stacked configuration on a base of the U-shaped channel. A front panel projects laterally outwardly from the U-shaped channel. The parking blocks **324** are mounted to a front side of the front panel.

FIGS. **17-19** show another fan-out and parking system **600** in accordance with the principles of the present disclosure. The system **600** includes a fan-out module **602** (FIG. **17** or **18**) that is used in combination with a separate parking module **604** (FIG. **19**). The fan-out module **602** and the parking module **604** are both adapted for connection to a rack **200** and preferably have a height less than or equal to one rack unit. The fan-out module **602** includes a main module body **606** in the form of a channel member **608** having a U-shaped transverse cross-sectional shape. A width of the fan-out module is less than the width W of the rack **200**. The channel member **608** includes a base portion **610** and two opposing leg portions **612**. One of the universal brackets **304** can be selectively attached to either of the leg portions **612** depending upon which side of the rack it is desired to mount the fan-out module **602**. In alternative embodiments, universal brackets **304** can be attached to both leg portions **612** (see FIG. **18**). One of the fan-out blocks **622** is fastened to the base portion **610** thereby mechanically coupling the fiber optic cable assembly **326** to the main module body **606**. By fastening the main module body **606** to one of the rails of the rack **200** via the universal bracket **304**, the fan-out module **602** can be used to mount/secure the fiber optic cable assembly **326** to the rack **200**.

The parking module **604** includes a main module body **616** in the form of a channel member **618** having a U-shaped transverse cross-sectional shape. A width of the fan-out module is less than the width W of the rack **200**. The channel member **618** includes a base portion **620** and two opposing leg portions **622**. One of the universal brackets **304** can be selectively attached to either of the leg portions **622** depending upon which side of the rack it is desired to mount the parking module **604**. In alternative embodiments, universal brackets **304** can be attached to both leg portions **622**. Parking blocks **624** are detachable mounted to a front face of the base portion **620**. By fastening the main module body **616** to one of the rails of the rack **200** adjacent to the fan-out module **602**, the parking module **604** can be used to store the connectors **332** of the fiber optic cable assembly **326** corresponding to the fan-out module **602**.

FIGS. **20** and **21** show another fan-out system **700** in accordance with the principles of the present disclosure. The system **700** includes a fan-out module **702** that includes a main module body **706** having a tray-like configuration. The width of the fan-out module **702** corresponds generally to the width W of the rack **200**. The main module body **706** includes a bottom wall **708**. A front wall **710**, opposing side walls **712**, **714** and a rear wall **716** project upwardly form the bottom wall **708** and define an interior region **718** of the main module body **706**. The side walls **712**, **714** extend between the front and rear walls **710**, **716**. The side wall **712** includes a rear notch **719** forming a rear portion of the side wall **712** which has a reduced height as compared to a front portion of the side wall **712**. The rear wall **716** has a reduced height as compared to the front wall **710**. The rear portion of the side wall **712** and the rear wall **716** have the same height. Universal brackets **304** are attached to the side walls **712**, **714** for allowing the fan-out module **702** to be attached to a rack **200**. Two rows of fiber optic adapters **720** are mounted to the front wall **710**. The fiber optic adapters **720** include back ports facing rearwardly from a back side of the front wall **710** and front ports facing forwardly from a front side of the front wall **710**. Two of the fiber optic cable assemblies **326** are routed on the main module body **706**. The fan-out blocks **322** are fastened to the bottom wall **708** within the interior region **718** at a location adjacent the rear wall **716**. The fan-out blocks **322** are oriented such that the ruggedized cable segments **334** are aligned along axes **335** that pass through the notch **719** or the rear portion of the side wall **712** positioned beneath the notch **719**. The axes **335** are depicted as being substantially/generally parallel (i.e., parallel or almost parallel) to the rear wall **716**. The multi-fiber connectors **500***b* are positioned within the interior region **718** with the lower connector **500***b* supported on the bottom wall **708**. The pigtail cable segments **336** can be routed around bend radius limiters **726** or other cable management structures mounted to the bottom wall **708**. The connectors **332** can be inserted into the rear ports of the fiber optic adapters **720**. Patch cords can be plugged into the front ports of the fiber optic adapters **720** and used to connect the fiber optic cable assemblies **326** to equipment at the cabinet **202**.

As used herein, equipment mounting structure means frames, racks, cabinets or other structures to which telecommunications equipment can be mounted.

Various modifications and alterations of this disclosure will become apparent to those skilled in the art without departing from the scope and spirit of this disclosure, and it should be understood that the scope of this disclosure is not to be unduly limited to the illustrative embodiments set forth herein.

The invention claimed is:

1. A telecommunications apparatus comprising:

a fan-out module main body adapted for connection to a rack;

a fan-out block attached to the fan-out module main body;

a multi-fiber cable segment including a jacket having an elongate transverse cross-sectional profile defining a major axis and a minor axis, the multi-fiber cable segment including a central region at which a plurality of optical fibers are positioned, the central region being positioned at an intersection between the major and minor axes, the multi-fiber cable segment including first and second strength members positioned along the major axis on opposite sides of the central region, the first and second strength members being anchored to the fan-out block;

a plurality of pigtail cable segments each including a jacket containing one of the optical fibers and a plurality of flexible strength members positioned inside the jacket, the flexible strength members of the pigtail cable segments being anchored to the fan-out block, the optical fibers being fanned out from the multi-fiber cable segment to the pigtail cable segments within the fan-out block; and

a plurality of single fiber connectors mounted to free ends of the pigtail cable segments.

2. The telecommunications apparatus of claim **1**, further comprising a ruggedized multi-fiber connector terminating a free end of the multi-fiber cable section.

3. The telecommunication apparatus of claim **2**, wherein the multi-fiber connector is positioned supported above a base wall of the fan-out module main body.

4. The telecommunications apparatus of claim **2**, wherein the fan-out module main body includes a U-shaped channel member, and wherein the fan-out block is attached to a base of the U-shaped channel member.

5. The telecommunications apparatus of claim **2**, wherein the fan-out module main body includes a tray including a base and a front wall, wherein the fan-out block is attached to the base and a plurality of fiber optic adapters are mounted to the front wall.

6. The telecommunications apparatus of claim **2**, wherein the tray defines an interior region and the multi-fiber connector is positioned within the interior region.

7. The telecommunications apparatus of claim **1**, further comprising a parking module including a plurality of connector holders for holding the single fiber connectors while end faces of ferrules of the single fiber connectors are protected by dust caps which circumferentially engage the ferrules, the parking module including a parking module main body separate from the fan-out module main body, the parking module main body being adapted for connection to the rack, the connector holders being mounted to the parking module main body.

8. The telecommunications apparatus of claim **7**, herein the connector holders are provided on separate parking blocks detachably mounted to the parking module main body, each of the parking blocks including a plurality of the connector holders.

9. A fan-out and parking module comprising:

a module main body adapted for connection to a rack, the module main body including a front wall having a front side and back side;

a fan-out block attached to the fan-out module main body;

a multi-fiber cable segment including a jacket containing a plurality of optical fibers, the multi-fiber cable segment also including at least one strength member anchored to the fan-out block;

a plurality of pigtail cable segments each including a jacket containing one of the optical fibers and at least one strength member positioned inside the jacket, the strength members of the pigtail cable segments being anchored to the fan-out block, the optical fibers being fanned out from the multi-fiber cable segment to the pigtail cable segments within the fan-out block;

a plurality of single fiber connectors mounted to free ends of the pigtail cable segments; and

a plurality of connector holders for holding the single fiber connectors while end faces of ferrules of the single fiber connectors are protected by dust caps which circumferentially engage the ferrules, the connector holders being mounted at the front side of the front wall of the module main body.

10. The fan-out and parking module of claim **9**, wherein the connector holders are provided on separate parking blocks detachably mounted to the module main body, each of the parking blocks including a plurality of the connector holders.

11. The fan-out and parking module of claim **9**, wherein the fan-out block is attached to the module main body at a location behind the front wall.

12. The fan-out and parking module of claim **11**, wherein the front wall defines a cable pass-through opening, and wherein the pigtail cable sections are routed from the fan-out block in a rearward to forward direction through the cable pass-through opening.

13. The fan-out and parking module of claim **12**, further comprising a boot projecting forwardly from the front wall at the cable pass-through opening, the pigtail cable sections being routed through the boot.

* * * * *