UNITED STATES PATENT AND TRADEMARK OFFICE

UNITED STATES DEPARTMENT OF COMMERCE
United States Patent and Trademark Office
Address: COMMISSIONER FOR PATENTS
P.O. Box 1450
Alexandria, Virginia 22313-1450
www.uspto.gov

APPLICATION NO.	FILING DATE	FIRST NAMED INVENTOR	ATTORNEY DOCKET NO.	CONFIRMATION NO.
18/232,729	08/10/2023	Vincent PILON	0404.0016-CON5	8148

194532 7590 09/28/2024
MH2 - Belden Canada
1951 Kidwell Drive
Suite 310
Tysons Corner, VA 22182

EXAMINER
PEACE, RHONDA S

ART UNIT	PAPER NUMBER
2874	

NOTIFICATION DATE	DELIVERY MODE
09/28/2024	ELECTRONIC

Please find below and/or attached an Office communication concerning this application or proceeding.

The time period for reply, if any, is set in the attached communication.

Notice of the Office communication was sent electronically on above-indicated "Notification Date" to the following e-mail address(es):

docketing@mh2law.com
khood@mh2law.com
uspatents@lavery.ca

PTOL-90A (Rev. 04/07)

CommScope v. Belden
IPR2024-01218
CommScope Exhibit 1036

Office Action Summary	Application No. 18/232,729	Applicant(s) PILON, Vincent	
	Examiner R. PEACE	Art Unit 2874	AIA (FITF) Status Yes

-- The MAILING DATE of this communication appears on the cover sheet with the correspondence address --

Period for Reply

A SHORTENED STATUTORY PERIOD FOR REPLY IS SET TO EXPIRE 3 MONTHS FROM THE MAILING DATE OF THIS COMMUNICATION.

- Extensions of time may be available under the provisions of 37 CFR 1.136(a). In no event, however, may a reply be timely filed after SIX (6) MONTHS from the mailing date of this communication.
- If NO period for reply is specified above, the maximum statutory period will apply and will expire SIX (6) MONTHS from the mailing date of this communication.
- Failure to reply within the set or extended period for reply will, by statute, cause the application to become ABANDONED (35 U.S.C. § 133). Any reply received by the Office later than three months after the mailing date of this communication, even if timely filed, may reduce any earned patent term adjustment. See 37 CFR 1.704(b).

Status

1)☑ Responsive to communication(s) filed on 8/5/24.

☐ A declaration(s)/affidavit(s) under **37 CFR 1.130(b)** was/were filed on _____.

2a)☐ This action is **FINAL.** 2b) ☑ This action is non-final.

3)☐ An election was made by the applicant in response to a restriction requirement set forth during the interview on _____; the restriction requirement and election have been incorporated into this action.

4)☐ Since this application is in condition for allowance except for formal matters, prosecution as to the merits is closed in accordance with the practice under *Ex parte Quayle*, 1935 C.D. 11, 453 O.G. 213.

Disposition of Claims*

5) ☑ Claim(s) 1-135 is/are pending in the application.

5a) Of the above claim(s) 16,62 and 111 is/are withdrawn from consideration.

6) ☐ Claim(s) _____ is/are allowed.

7) ☑ Claim(s) 1-15,17-61,63-110 and 112-135 is/are rejected.

8) ☐ Claim(s) _____ is/are objected to.

9) ☑ Claim(s) 1-135 are subject to restriction and/or election requirement

* If any claims have been determined allowable, you may be eligible to benefit from the **Patent Prosecution Highway** program at a participating intellectual property office for the corresponding application. For more information, please see http://www.uspto.gov/patents/init_events/pph/index.jsp or send an inquiry to **PPHfeedback@uspto.gov.**

Application Papers

10)☐ The specification is objected to by the Examiner.

11)☑ The drawing(s) filed on 8/10/23 is/are: a)☑ accepted or b)☐ objected to by the Examiner.

Applicant may not request that any objection to the drawing(s) be held in abeyance. See 37 CFR 1.85(a).

Replacement drawing sheet(s) including the correction is required if the drawing(s) is objected to. See 37 CFR 1.121(d).

Priority under 35 U.S.C. § 119

12)☐ Acknowledgment is made of a claim for foreign priority under 35 U.S.C. § 119(a)-(d) or (f).

Certified copies:

a)☐ All b)☐ Some** c)☐ None of the:

1.☐ Certified copies of the priority documents have been received.

2.☐ Certified copies of the priority documents have been received in Application No. _____.

3.☐ Copies of the certified copies of the priority documents have been received in this National Stage application from the International Bureau (PCT Rule 17.2(a)).

** See the attached detailed Office action for a list of the certified copies not received.

Attachment(s)

1) ☑ Notice of References Cited (PTO-892)

2) ☑ Information Disclosure Statement(s) (PTO/SB/08a and/or PTO/SB/08b) Paper No(s)/Mail Date 2/27/24.

3) ☐ Interview Summary (PTO-413) Paper No(s)/Mail Date _____.

4) ☐ Other: _____.

DETAILED ACTION

Notice of Pre-AIA or AIA Status

The present application, filed on or after March 16, 2013, is being examined under the first inventor to file provisions of the AIA.

Election/Restrictions

Applicant's election without traverse of claims 1-15 and 17-135 in the reply filed on 8/5/24 is acknowledged.

The subject matter of claim 16, "wherein the cassette fastening tray portion comprises a magnet," does not read on the elected species and sub-species. Similar limitations are present in claims 62 and 111, and therefore claims 1-15, 17-61, 63-110, and 112-135 presently read on the elected species and sub-species are considered below.

Information Disclosure Statement

The information disclosure statement (IDS) submitted on 2/27/24 was filed in compliance with the provisions of 37 CFR 1.97. Accordingly, the information disclosure statement is being considered by the examiner.

Claim Rejections - 35 USC § 112

The following is a quotation of 35 U.S.C. 112(b):

(b) CONCLUSION.—The specification shall conclude with one or more claims particularly pointing out and distinctly claiming the subject matter which the inventor or a joint inventor regards as the invention.

The following is a quotation of 35 U.S.C. 112 (pre-AIA), second paragraph:

CommScope v. Belden
IPR2024-01218
CommScope Exhibit 1036

> The specification shall conclude with one or more claims particularly pointing out and distinctly claiming the subject matter which the applicant regards as his invention.

Claim 6 is rejected under 35 U.S.C. 112(b) or 35 U.S.C. 112 (pre-AIA), second paragraph, as being indefinite for failing to particularly point out and distinctly claim the subject matter which the inventor or a joint inventor (or for applications subject to pre-AIA 35 U.S.C. 112, the applicant), regards as the invention.

Claim 6 recites the limitation "the trade width portion" in line 1. There is insufficient antecedent basis for this limitation in the claim. For purposes of examination, the claim is considered to recite “the tray width portion.”

Claim Rejections - 35 USC § 102

In the event the determination of the status of the application as subject to AIA 35 U.S.C. 102 and 103 (or as subject to pre-AIA 35 U.S.C. 102 and 103) is incorrect, any correction of the statutory basis (i.e., changing from AIA to pre-AIA) for the rejection will not be considered a new ground of rejection if the prior art relied upon, and the rationale supporting the rejection, would be the same under either status.

The following is a quotation of the appropriate paragraphs of 35 U.S.C. 102 that form the basis for the rejections under this section made in this Office action:

> A person shall be entitled to a patent unless –
>
> (a)(2) the claimed invention was described in a patent issued under section 151, or in an application for patent published or deemed published under section 122(b), in which the patent or application, as the case may be, names another inventor and was effectively filed before the effective filing date of the claimed invention.

Claim(s) 1-15, 18-61, 64-110, and 113-135 is/are rejected under 35 U.S.C. 102(a)(2) as being anticipated by Fukui et al. (US 10,101,551 B2).

CommScope v. Belden
IPR2024-01218
CommScope Exhibit 1036

Re. Claim 1, Fukui et al. discloses a tray 30 for providing a plurality of modular fiber optic cassette configurations in a fiber management system (Fig. 9; col. 8 lines 16-32) comprising:

a tray member 30e configured to fit a plurality of modular fiber optic cassettes when the plurality of modular fiber optic cassettes are arranged side-by-side along the tray member 30e (Figs. 6-9; col. 8 lines 17-19 and 45-48);

wherein the tray member 30e includes a plurality of cassette engaging tray portions 33b that are each configured to engage a tray engaging cassette portion 11j of each of the plurality of modular fiber optic cassettes (Figs. 2 and 9; col. 8 lines 52-56);

wherein each of the plurality of modular fiber optic cassettes comprise a modular cassette width portion (e.g., “modular cassette width” is measured along the x-direction of the cassette as seen in Figs. 1-5) that is configured to fit a plurality of standard modular cassette width units (e.g., coupling multiple cassettes 10 creates larger cassettes 20; Figs. 1-5; col. 7 lines 61-67; col. 8 lines 1-3);

wherein the plurality of standard modular cassette width units comprise:

a standard width unit 10 (1W) (Figs. 1-2; col. 5 lines 24-27);

two standard width units 20 (2W) (Fig. 5; col. 7 lines 23-33);

three standard width units (3W) (e.g., 36 cores with three integral units 10 each having three tiers; col. 7 line 67; col. 8 lines 1-6);

four standard width units (4W) (e.g., 48 cores with three integral units 10 each having three tiers; col. 7 line 67; col. 8 lines 1-6); and

six standard width units (6W) (e.g., tray member 10e is configured to receive up to twelve 1W units 10, resulting in inherent cassette width units up to

CommScope v. Belden
IPR2024-01218
CommScope Exhibit 1036

and including 12W, for example a 12W unit results when all of the units 10 across the tray are integrally formed; the prior art inherently discloses 6W units);

wherein the modular cassette width portion comprises a first modular cassette width portion and a second modular cassette width portion that is different from the first modular cassette width portion (e.g., the space for twelve 1W units on the tray, in combination with the capability of coupling up to twelve 1W units directly to one another to form an integral unit, inherently results in arrangements wherein the modular cassette width portion comprises cassettes of different widths, for example a tray comprising one 1W unit, two 2W units, one 3W unit, and one 4W unit or a tray comprising one 6W unit and six 1W units, etc.);

wherein the tray member 10e is configured to support the plurality of modular fiber optic cassettes such that an outer side edge cassette portion 11c of one modular fiber optic cassette is located directly adjacent (e.g., lacking intervening structure) to another outer side edge 11d cassette portion of another modular fiber optic cassette when the plurality of modular fiber optic cassettes are arranged side-by-side along the tray member (e.g., cassettes are fastened to the tray member 30e such that their side faces make direct contact, and therefore are “directly adjacent;” Figs 1 and 5-8; col. 6 lines 21-32);

wherein the 1W unit is based on a standard SC Duplex width unit that is configured to fit a plurality of different types of LC, SC, and MPO connectors (e.g., “1W” is based on LC quad technology footprint, and thus “based on a standard SC Duplex width unit,” since by industry standards the footprint of four (quad) LC connectors is designed to fit the footprint of dual SC connectors; col. 5 lines 24-36);

CommScope v. Belden
IPR2024-01218
CommScope Exhibit 1036

wherein each of the plurality of cassette engaging tray portions 33b of the tray member 30e are configured to be spaced apart from one another so as to conform to the standard width unit (1W) (Fig. 9; col. 8 lines 52-56);

wherein each of the plurality of cassette engaging tray portions 33b of the tray member 30e are configured to be spaced apart from one another so as to conform to the plurality of standard modular cassette width units 1W, 2W, 3W, 4W, and 6W and allow the tray member to fit the plurality of modular fiber optic cassettes when the plurality of modular fiber optic cassettes are arranged side-by-side along the tray member (Fig. 9; col. 8 lines 52-56);

wherein the tray member 30e is configured to fit a plurality of different modular fiber optic cassette configurations that comprise:

a first modular fiber optic cassette configuration that includes six modular 2W cassettes that are each arranged side-by-side of each other along the tray member such that a cassette side end portion of each cassette of the first modular fiber optic cassette configuration adjacently faces a cassette side end portion of another modular cassette of the first modular fiber optic cassette configuration;

Fig.8

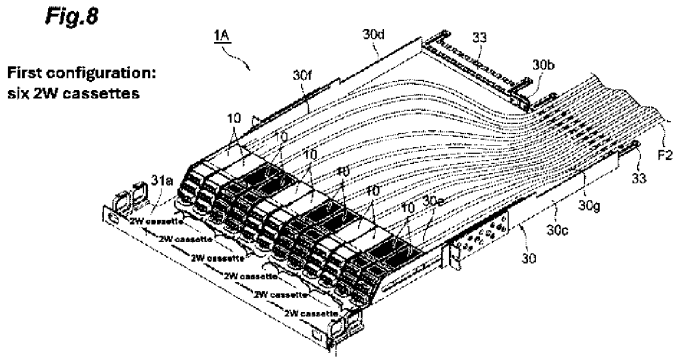

CommScope v. Belden
IPR2024-01218
CommScope Exhibit 1036

a second modular fiber optic cassette configuration that includes four modular 3W cassettes that are each arranged side-by- side of each other along the tray member such that a cassette side end portion of each cassette of the second modular fiber optic cassette configuration adjacently faces a cassette side end portion of another modular cassette of the second modular fiber optic cassette configuration;

Fig.8

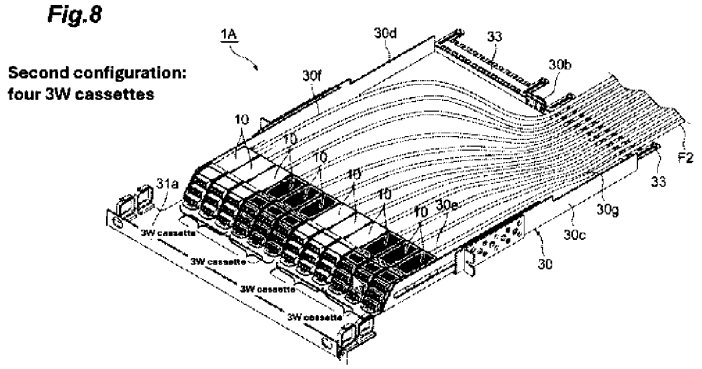

a third modular fiber optic cassette configuration that includes three modular 4W cassettes that are each arranged side-by-side of each other along the tray member such that a cassette side end portion of each cassette of the third modular fiber optic cassette configuration adjacently faces a cassette side end portion of another modular cassette of the third modular fiber optic cassette configuration;

Fig.8

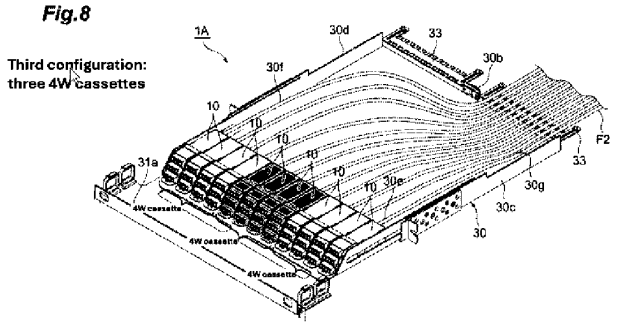

CommScope v. Belden
IPR2024-01218
CommScope Exhibit 1036

a fourth modular fiber optic cassette configuration that includes two modular 6W cassettes that are each arranged side-by-side of each other along the tray member such that a cassette side end portion of each cassette of the fourth modular fiber optic cassette configuration adjacently faces a cassette side end portion of another modular cassette of the fourth modular fiber optic cassette configuration;

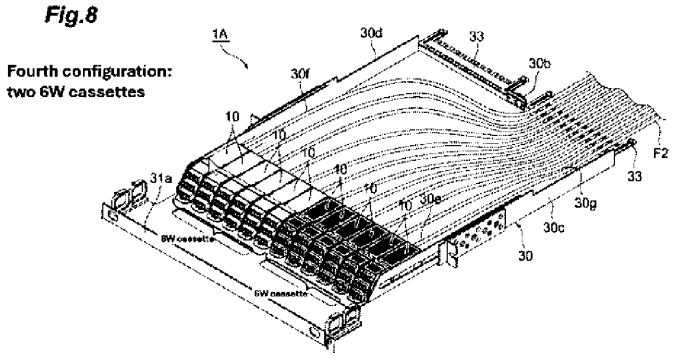

a fifth modular fiber optic cassette configuration that includes one modular 2W cassette, two modular 3W cassettes and one modular 4W cassette that are each arranged side-by-side of each other along the tray member such that a cassette side end portion of each cassette of the fifth modular fiber optic cassette configuration adjacently faces a cassette side end portion of another modular cassette of the fifth modular fiber optic cassette configuration; and

CommScope v. Belden
IPR2024-01218
CommScope Exhibit 1036

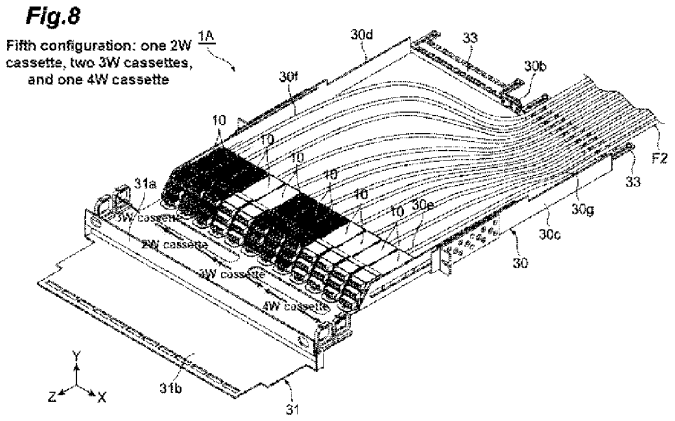

a sixth modular fiber optic cassette configuration that includes two modular 2W cassettes and two modular 4W cassettes that are each arranged side-by-side of each other along the tray member such that a cassette side end portion of each cassette of the sixth modular fiber optic cassette configuration adjacently faces a cassette side end portion of another modular cassette of the sixth modular fiber optic cassette configuration; and

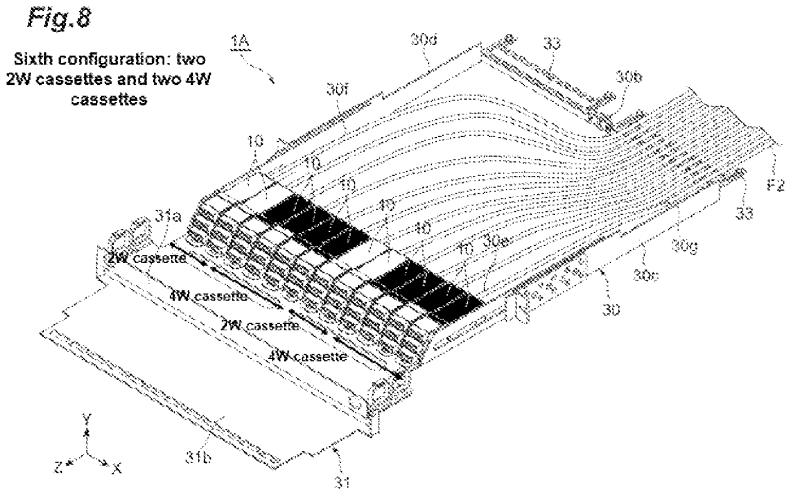

CommScope v. Belden
IPR2024-01218
CommScope Exhibit 1036

wherein the tray member 30e is configured to slidingly move relative to a rack-mount tray receiving space of a rack-mount case 30g/30c/30d between a tray-in position, where the tray member 30e is located in the tray receiving space, and a tray-out position, where the tray member 30e is located at least partially outside the tray receiving space (Fig. 9; col. 8 lines 57-64).

Re. Claim 2, Fukui et al. discloses each of the plurality of modular fiber optic cassettes includes a cassette side end portion 11a that is configured to be located directly adjacent (e.g., lacking intervening structure) to a cassette side end portion 11a of another module fiber optic cassette when the plurality of modular fiber optic cassettes are arranged side- by-side along the tray member 10e (Figs 5-8; col. 5 lines 6-12)col. 6 lines 21-32).

Re. Claim 3, Fukui et al. discloses each of the plurality of modular fiber optic cassettes includes a cassette side end portion 11a that is configured to be located adjacent to a cassette side end portion 11a of another module fiber optic cassette when the plurality of modular fiber optic cassettes are arranged side-by-side along the tray member (Figs 5-8; col. 5 lines 6-12; col. 6 lines 21-32).

Re. Claim 4, Fukui et al. discloses each of the plurality of modular fiber optic cassettes includes a cassette side end portion 11a that is configured to touch (e.g., abut along their edges) a cassette side end portion of another module fiber optic cassette 11a when the plurality of modular fiber optic cassettes are arranged side-by-side along the tray member (Figs 5-8; col. 5 lines 6-12; col. 6 lines 21-32).

Re. Claim 5, Fukui et al. discloses the tray member 10e has a first tray end portion (e.g., left side) and a second tray end portion (e.g., right side) that is configured

CommScope v. Belden
IPR2024-01218
CommScope Exhibit 1036

to be spaced away from the first tray end portion so as to define a tray width portion that extends between the first tray end portion and the second tray end portion (Fig. 9).

Re. Claim 6, Fukui et al. discloses the tray width portion is configured to fit the plurality of modular fiber optic cassettes when the plurality of modular fiber optic cassettes are arranged side-by-side along the tray member (Figs 6-8).

Re. Claim 7, Fukui et al. discloses the tray member 10e is configured such that the plurality of modular fiber optic cassettes fit in the tray width portion when the plurality of modular fiber optic cassettes are arranged side-by-side along the tray member (Figs. 6-8).

Re. Claim 8, Fukui et al. discloses the tray width portion of the tray member 10e is configured to fit at least twelve standard one width (1W) units when the plurality of modular fiber optic cassettes are arranged side-by-side along the tray width portion of the tray member (Figs 6-9).

Re. Claim 9, Fukui et al. discloses the tray member 10e <u>is configured to allow</u> a front cassette portion 14 of each of the plurality of modular fiber optic cassette to be accessed when the plurality of modular fiber optic cassettes are arranged side-by-side along the tray member and when the tray member is in the tray- in position (e.g., front lid 31 operates independently of the sliding mechanism, thereby inherently disclosing an arrangement wherein the lid is open while the tray is in the closed position; Figs. 1, 6, and 8; col. 5 lines 43-45; col. 8 lines 13-16 and 34-44).

Re. Claim 10, Fukui et al. discloses the tray member 10e is configured to allow a rear cassette portion of each of the plurality of modular fiber optic cassette to be accessed when the plurality of modular fiber optic cassettes are arranged side-by-side

CommScope v. Belden
IPR2024-01218
CommScope Exhibit 1036

along the tray member and when the tray member is in the tray- in position (Fig. 7; col. 8 lines 10-13).

Re. Claim 11, Fukui et al. discloses the tray member 10e includes a cassette engaging shoulder (e.g., inside edge of hole 33a) that is configured to fit a channel portion (e.g., channel formed by hook 11i) of each of the plurality of modular fiber optic cassettes (Figs. 2 and 9; col. 8 lines 52-56).

Re. Claim 12, Fukui et al. discloses the cassette engaging shoulder (e.g., inside edge of hole 33a) is located adjacent to a front end portion of the tray member 10e such that the tray member 10e is configured to support one of the plurality of modular fiber optic cassettes at a front location of the tray member 10e (Fig. 9).

Re. Claim 13, Fukui et al. discloses the tray member is configured to be mounted in a rack (col. 9 lines 30-35).

Re. Claim 14, Fukui et al. discloses the tray member is configured to be mounted in a standard U-space rack (col. 9 lines 30-35).

Re. Claim 15, Fukui et al. discloses the tray member 10e comprises a cassette fastening tray portion 33a that is configured to removably secure the tray member 10e to one of the plurality of modular fiber optic cassettes (Figs. 2 and 9; col. 8 lines 52-56).

Re. Claim 18, Fukui et al. discloses the tray member is configured to fit the plurality of different modular fiber optic cassette configurations in a standard U-space (col. 9 lines 30-35).

Re. Claim 19, Fukui et al. discloses each of the plurality of different modular fiber optic cassette configurations include a plurality of different sizes of modular fiber optic

CommScope v. Belden
IPR2024-01218
CommScope Exhibit 1036

cassettes (e.g., multiple units 10 are integrally formed, inherently resulting in cassette widths from 1W to 12W).

Re. Claim 20, Fukui et al. discloses the plurality of different sizes of modular fiber optic cassettes include a 2W cassette size that is configured to fit a standard two width (2W) unit relative to the standard one width (1W) unit (Fig. 5; col. 7 lines 23-33).

Re. Claim 21, Fukui et al. discloses the plurality of different sizes of modular fiber optic cassettes include a 3W cassette size that is configured to fit a standard three width (3W) unit relative to the standard one width (1W) unit (e.g., 36 cores with three integral units 10 each having three tiers; col. 7 line 67; col. 8 lines 1-6).

Re. Claim 22, Fukui et al. discloses the plurality of different sizes of modular fiber optic cassettes include a 4W cassette size that is configured to fit a standard four width (4W) unit relative to the standard one width (1W) unit (e.g., 48 cores with three integral units 10 each having three tiers; col. 7 line 67; col. 8 lines 1-6).

Re. Claim 23, Fukui et al. discloses the plurality of different sizes of modular fiber optic cassettes include a 6W cassette size that is configured to fit a standard six width (6W) unit relative to the standard one width (1W) unit (e.g., tray member 10e is configured to receive up to twelve 1W units 10, resulting in inherent cassette width units up to and including 12W, for example a 12W unit results when all of the units 10 across the tray are integrally formed; the prior art inherently discloses 6W units).

Re. Claim 24, Fukui et al. discloses each of the plurality of different sizes of modular fiber optic cassettes is configured to support a fiber optic receptable module 10 that is configured to fit in the standard one width (1W) unit (col. 10 lines 6-10).

CommScope v. Belden
IPR2024-01218
CommScope Exhibit 1036

Re. Claim 25, Fukui et al. discloses the fiber optic receptable module 10 includes a first module side end portion and a second module side end portion defining a module width portion extending between the first try end portion and second tray end portion, and the module width portion is configured to fit in the standard one width (1W) unit (Figs. 1-2; col. 5 lines 24-27).

Re. Claim 39, Fukui et al. discloses each of the plurality of different sizes of modular fiber optic cassettes is configured to support a fiber optic receptable module that is configured to fit at least four fiber optic plug receiving receptacle portions 13 (Fig. 1; col. 5 lines 24-27).

Re. Claim 40, Fukui et al. discloses each of the plurality of different sizes of modular fiber optic cassettes is configured to support a fiber optic receptable module that is configured to fit at least four fiber optic plug receiving receptacle portions 13 in the standard one width (1W) unit (Fig. 1; col. 5 lines 24-27).

Re. Claim 26, Fukui et al. discloses the plurality of different modular fiber optic cassette configurations comprise a first modular fiber optic cassette configuration that includes six modular 2W standard width unit size cassettes that are each arranged side-by-side of each other along the tray member such that a cassette side end portion of each modular 2W standard width unit size cassette adjacently faces a cassette side end portion of at least one other modular 2W standard width size cassette.

CommScope v. Belden
IPR2024-01218
CommScope Exhibit 1036

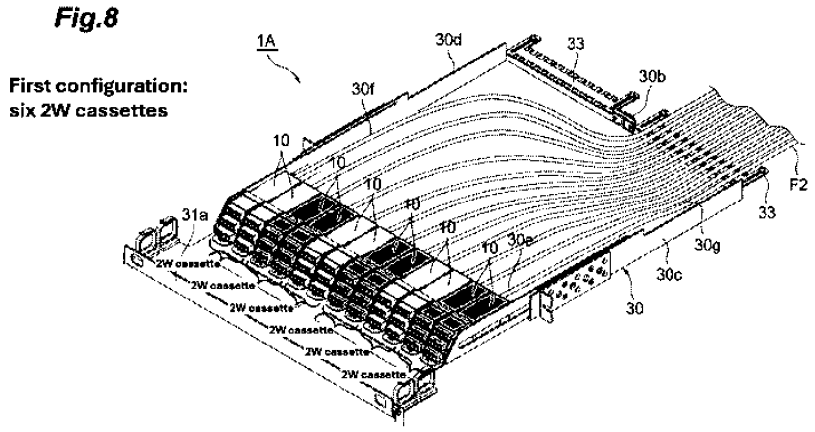

Re. Claim 27, Fukui et al. discloses the plurality of different modular fiber optic cassette configurations comprise a second modular fiber optic cassette configuration that includes four modular 3W standard width unit size cassettes that are each arranged side-by-side of each other in a row along the tray member such that a cassette side end portion of each modular 3W standard width size cassette adjacently faces a cassette side end portion of at least one other modular 3W standard width size cassette.

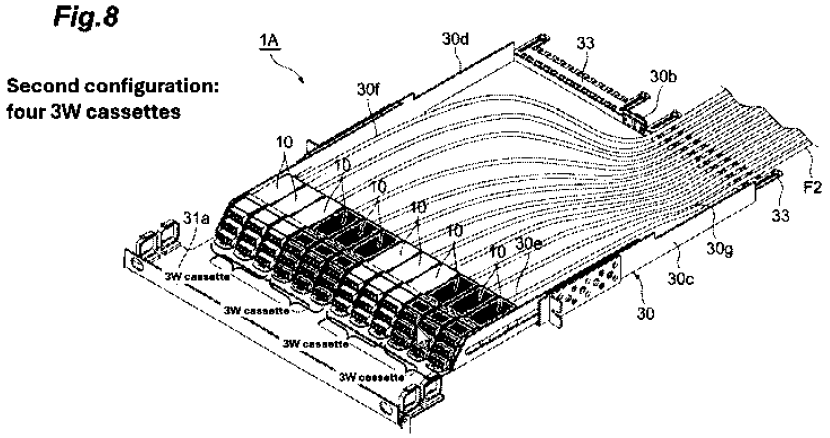

Re. Claim 28, Fukui et al. discloses the plurality of different modular fiber optic cassette configurations comprise a third modular fiber optic cassette configuration that includes three modular 4W standard width unit size cassettes that are each arranged

CommScope v. Belden
IPR2024-01218
CommScope Exhibit 1036

side-by-side of each other in a row along the tray member such that a cassette side end portion of each modular 4W standard width size cassette adjacently faces a cassette side end portion of at least one other modular 4W standard width size cassette.

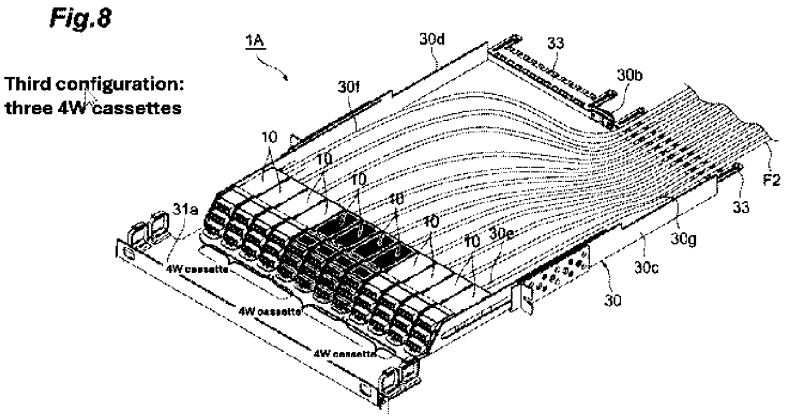

Re. Claim 29, Fukui et al. discloses the plurality of different modular fiber optic cassette configurations comprise a fourth modular fiber optic cassette configuration that includes two modular 6W standard width unit size cassettes that are each arranged side-by-side of each other in a row along the tray member such that a cassette side end portion of one of the two modular 6W standard width size cassettes adjacently faces a cassette side end portion of the other modular 6W standard width size cassette.

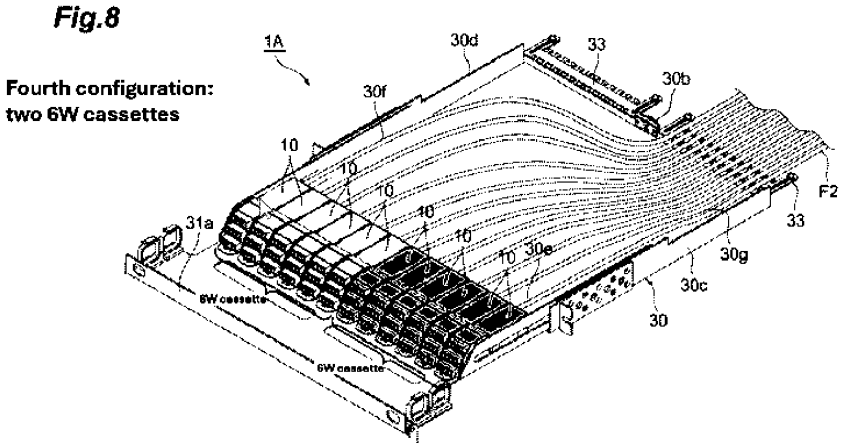

CommScope v. Belden
IPR2024-01218
CommScope Exhibit 1036

Re. Claim 30, Fukui et al. discloses the plurality of different modular fiber optic cassette configurations comprise a seventh modular fiber optic cassette configuration that includes three modular 2W standard width unit size cassettes, which are each arranged side-by-side of each other in a row along the tray member such that a cassette side end portion of one of the three modular 2W standard width size cassettes adjacently faces a cassette side end portion of one of the other modular 2W standard width size cassette, and one modular 6W standard width unit size cassette that is arranged side-by- side in a row along the tray member with one of the three modular 2W standard width unit size cassettes, such that a cassette side end portion of the one modular 6W standard width unit size cassette adjacently faces a cassette side end portion of one of the other three modular 2W standard width unit size cassettes.

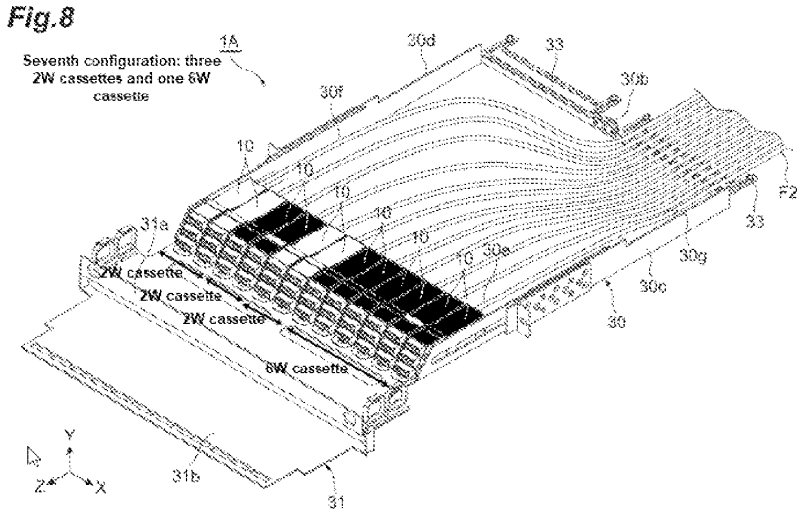

Re. Claim 31, Fukui et al. discloses each modular 2W standard width unit size cassette includes a first 2W cassette side end portion 11d and a second 2W cassette side end portion 11c configured to define a 2W standard cassette width unit that extends between the first 2W cassette side end portion 11d and the second 2W

CommScope v. Belden
IPR2024-01218
CommScope Exhibit 1036

cassette side end portion 11cthat is configured to fit the standard two width (2W) unit (Fig. 5; col. 7 lines 23-33).

Re. Claim 32, Fukui et al. discloses the modular 3W standard width unit size cassette includes a first 3W cassette side end portion and a second 3W cassette side end portion defining a 3W standard cassette width unit extending between the first 3W cassette side end portion and the second 3W cassette side end portion that is configured to fit the standard three width (3W) unit (Figs. 1 and 5; col. 7 lines 65-67; col. 8 lines 1-3).

Re. Claim 33, Fukui et al. discloses the modular 4W standard width unit size cassette includes a first 4W cassette side end portion and a second 4W cassette side end portion defining a 4W standard cassette width unit extending between the first 4W cassette side end portion and the second 4W cassette side end portion that is configured to fit the standard four width (4W) unit (Figs. 1 and 5; col. 7 lines 65-67; col. 8 lines 1-3).

Re. Claim 34, Fukui et al. discloses the modular 6W standard width unit size cassette includes a first 6W cassette side end portion and a second 6W cassette side end portion defining a 6W standard cassette width unit extending between the first 6W cassette side end portion and the second 6W cassette side end portion that is configured to fit the standard six width (6W) unit (Figs. 1 and 5; col. 7 lines 65-67; col. 8 lines 1-3).

Re. Claim 35, Fukui et al. discloses the modular 2W standard width unit size cassette is configured to fit two receptacle modules 10 (Figs. 1 and 5; col. 7 lines 23-33).

CommScope v. Belden
IPR2024-01218
CommScope Exhibit 1036

Re. Claim 36, Fukui et al. discloses the modular 3W standard width unit size cassette is configured to fit three receptacle modules 10 (Figs. 1 and 5; col. 7 lines 65-67; col. 8 lines 1-3).

Re. Claim 37, Fukui et al. discloses the modular 4W standard width unit size cassette is configured to fit four receptacle modules 10 (Figs. 1 and 5; col. 7 lines 65-67; col. 8 lines 1-3).

Re. Claim 38, Fukui et al. discloses modular 6W standard width unit size cassette is configured to fit six receptacle modules 10 (Figs. 1 and 5; col. 7 lines 65-67; col. 8 lines 1-3).

Re. Claim 41, Fukui et al. discloses a tray 30 for providing a plurality of modular fiber optic cassette configurations in a fiber management system (Fig. 9; col. 8 lines 16-32) comprising:

a tray member 30e configured to fit a plurality of modular fiber optic cassettes when the plurality of modular fiber optic cassettes are arranged side-by-side along the tray member 30e (Figs. 6-9; col. 8 lines 17-19 and 45-48);

wherein the tray member 30e includes a plurality of cassette engaging tray portions 33b that are each configured to engage a tray engaging cassette portion 11j of each of the plurality of modular fiber optic cassettes (Figs. 2 and 9; col. 8 lines 52-56);

wherein each of the plurality of modular fiber optic cassettes comprise a modular cassette width portion (e.g., “modular cassette width” is measured along the x-direction of the cassette as seen in Figs. 1-5) that is configured to fit a plurality of standard modular cassette width units (e.g., coupling multiple cassettes 10 creates larger cassettes 20; Figs. 1-5; col. 7 lines 61-67; col. 8 lines 1-3);

CommScope v. Belden
IPR2024-01218
CommScope Exhibit 1036

wherein the plurality of standard modular cassette width units comprise:

a standard width unit 10 (1W) (Figs. 1-2; col. 5 lines 24-27);

two standard width units 20 (2W) (Fig. 5; col. 7 lines 23-33);

three standard width units (3W) (e.g., 36 cores with three integral units 10 each having three tiers; col. 7 line 67; col. 8 lines 1-6);

four standard width units (4W) (e.g., 48 cores with three integral units 10 each having three tiers; col. 7 line 67; col. 8 lines 1-6);

wherein the modular cassette width portion comprises a first modular cassette width portion and a second modular cassette width portion that is different from the first modular cassette width portion (e.g., the space for twelve 1W units on the tray, in combination with the capability of coupling up to twelve 1W units directly to one another to form an integral unit, inherently results in arrangements wherein the modular cassette width portion comprises cassettes of different widths, for example a tray comprising one 1W unit, two 2W units, one 3W unit, and one 4W unit or a tray comprising one 6W unit and six 1W units, etc.);

wherein the tray member 10e is configured to support the plurality of modular fiber optic cassettes such that an outer side edge cassette portion 11c of one modular fiber optic cassette is located directly adjacent (e.g., lacking intervening structure) to another outer side edge 11d cassette portion of another modular fiber optic cassette when the plurality of modular fiber optic cassettes are arranged side-by-side along the tray member (e.g., cassettes are fastened to the tray member 30e such that their side faces make direct contact, and therefore are “directly adjacent;” Figs 1 and 5-8; col. 6 lines 21-32);

CommScope v. Belden
IPR2024-01218
CommScope Exhibit 1036

wherein each of the plurality of cassette engaging tray portions 33b of the tray member 30e are configured to be spaced apart from one another so as to conform to the standard width unit (1W) (Fig. 9; col. 8 lines 52-56);

wherein each of the plurality of cassette engaging tray portions 33b of the tray member 30e are configured to be spaced apart from one another so as to conform to the plurality of standard modular cassette width units 1W, 2W, 3W, and 4W and allow the tray member to fit the plurality of modular fiber optic cassettes when the plurality of modular fiber optic cassettes are arranged side-by-side along the tray member (Fig. 9; col. 8 lines 52-56);

wherein the tray member 30e is configured to fit a plurality of different modular fiber optic cassette configurations that comprise:

a first modular fiber optic cassette configuration that includes six modular 2W cassettes that are each arranged side-by-side of each other along the tray member such that a cassette side end portion of each cassette of the first modular fiber optic cassette configuration adjacently faces a cassette side end portion of another modular cassette of the first modular fiber optic cassette configuration;

Fig.8

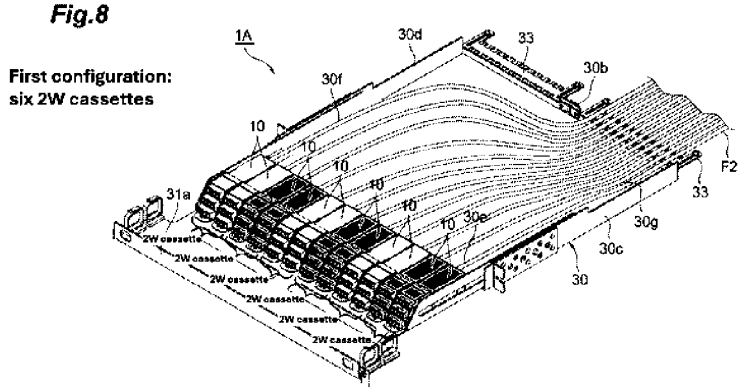

CommScope v. Belden
IPR2024-01218
CommScope Exhibit 1036

a second modular fiber optic cassette configuration that includes four modular 3W cassettes that are each arranged side-by- side of each other along the tray member such that a cassette side end portion of each cassette of the second modular fiber optic cassette configuration adjacently faces a cassette side end portion of another modular cassette of the second modular fiber optic cassette configuration;

Fig.8

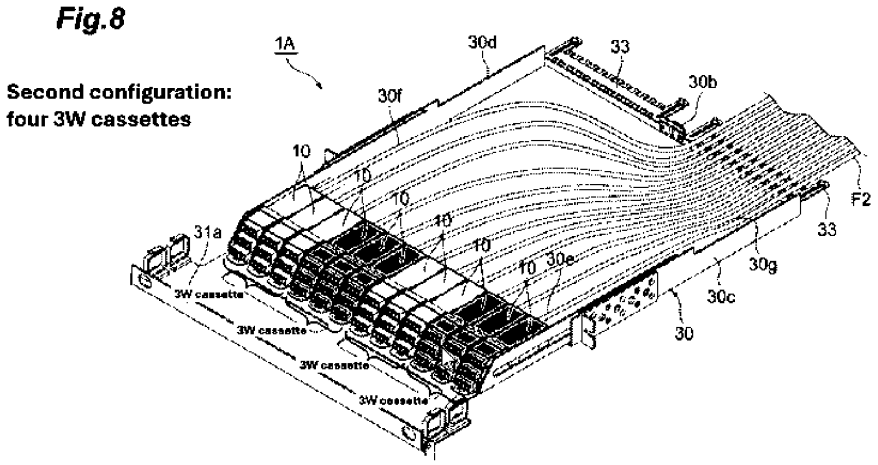

a third modular fiber optic cassette configuration that includes three modular 4W cassettes that are each arranged side-by-side of each other along the tray member such that a cassette side end portion of each cassette of the third modular fiber optic cassette configuration adjacently faces a cassette side end portion of another modular cassette of the third modular fiber optic cassette configuration;

CommScope v. Belden
IPR2024-01218
CommScope Exhibit 1036

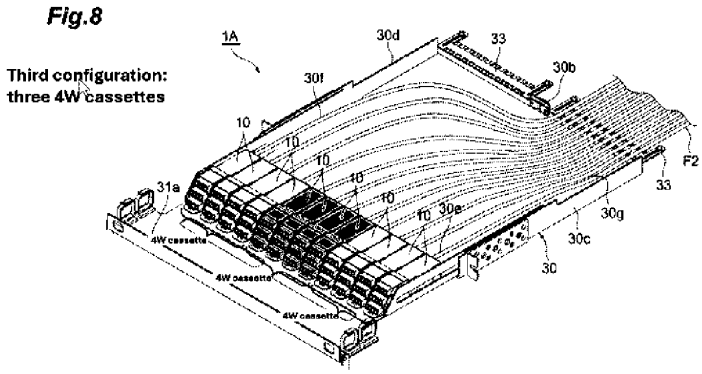

a fourth modular fiber optic cassette configuration that includes two modular 6W cassettes that are each arranged side-by-side of each other along the tray member such that a cassette side end portion of each cassette of the fourth modular fiber optic cassette configuration adjacently faces a cassette side end portion of another modular cassette of the fourth modular fiber optic cassette configuration.

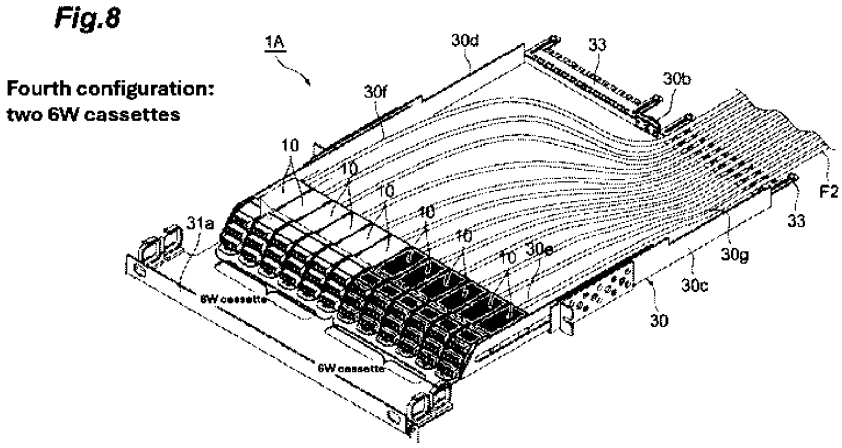

Re. Claim 42, Fukui et al. discloses the plurality of standard modular cassette width units also comprise six standard width units (6W) (e.g., tray member 10e is configured to receive up to twelve 1W units 10, resulting in inherent cassette width units

CommScope v. Belden
IPR2024-01218
CommScope Exhibit 1036

up to and including 12W, for example a 12W unit results when all of the units 10 across the tray are integrally formed; the prior art inherently discloses 6W units).

Re. Claim 43, Fukui et al. discloses the 1W unit is based on a standard SC Duplex width unit that is configured to fit a plurality of different types of LC, SC, and MPO connectors (e.g., "1W" is based on LC quad technology footprint, and thus "based on a standard SC Duplex width unit," since by industry standards the footprint of four (quad) LC connectors is designed to fit the footprint of dual SC connectors; col. 5 lines 24-36).

Re. Claim 44, Fukui et al. discloses each of the plurality of cassette engaging tray portions 33b of the tray member 30e are configured to be spaced apart from one another so as to conform to the standard width unit (1W) (Figs. 2 and 9; col. 8 lines 52-56).

Re. Claim 45, Fukui et al. discloses the tray member 30e is configured to slidingly move relative to a rack-mount tray receiving space of a rack-mount case 30g/30c/30d between a tray-in position, where the tray member 30e is located in the tray receiving space, and a tray-out position, where the tray member 30e is located at least partially outside the tray receiving space (Fig. 9; col. 8 lines 57-64).

Re. Claim 46, Fukui et al. discloses the tray member 10e is configured to be selectively fastened to each of the plurality of fiber optic cassettes when the plurality of modular fiber optic cassettes are arranged side-by-side along the tray member 10e (Figs. 2 and 9; col. 8 lines 52-56).

Re. Claim 47, Fukui et al. discloses the plurality of different modular fiber optic cassette configurations also comprise: a fifth modular fiber optic cassette configuration

CommScope v. Belden
IPR2024-01218
CommScope Exhibit 1036

that includes one modular 2W cassette, two modular 3W cassettes and one modular 4W cassette that are each arranged side-by-side of each other along the tray member such that a cassette side end portion of each cassette of the fifth modular fiber optic cassette configuration adjacently faces a cassette side end portion of another modular cassette of the fifth modular fiber optic cassette configuration;

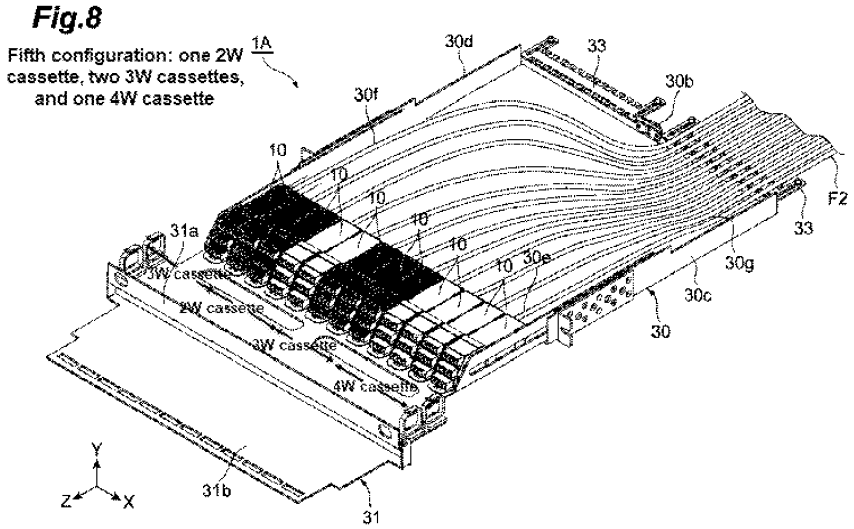

and a sixth modular fiber optic cassette configuration that includes two modular 2W cassettes and two modular 4W cassettes that are each arranged side-by-side of each other along the tray member 10e such that a cassette side end portion of each cassette of the sixth modular fiber optic cassette configuration adjacently faces a cassette side end portion of another modular cassette of the sixth modular fiber optic cassette configuration.

CommScope v. Belden
IPR2024-01218
CommScope Exhibit 1036

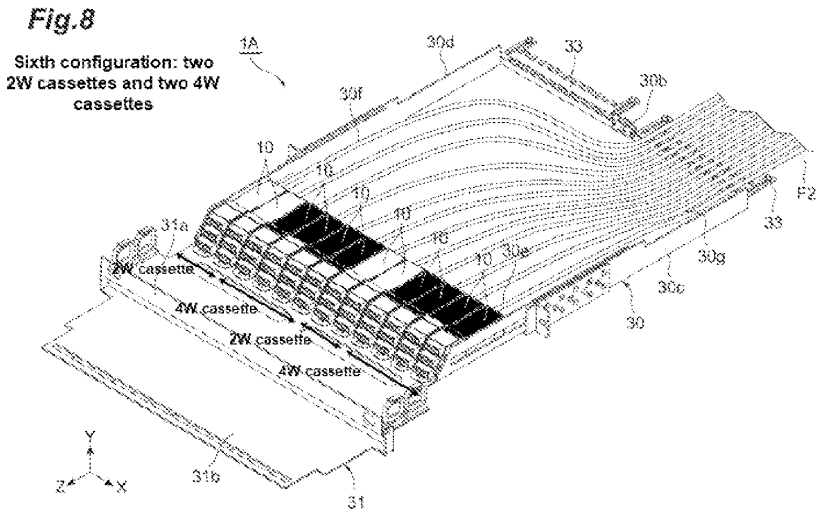

Re. Claim 48, Fukui et al. discloses each of the plurality of modular fiber optic cassettes includes a cassette side end portion 11a that is configured to be located directly adjacent (e.g., lacking intervening structure) to a cassette side end portion 11a of another module fiber optic cassette when the plurality of modular fiber optic cassettes are arranged side- by-side along the tray member 10e (Figs 5-8; col. 5 lines 6-12)col. 6 lines 21-32).

Re. Claim 49, Fukui et al. discloses each of the plurality of modular fiber optic cassettes includes a cassette side end portion 11a that is configured to be located adjacent to a cassette side end portion 11a of another module fiber optic cassette when the plurality of modular fiber optic cassettes are arranged side-by-side along the tray member (Figs 5-8; col. 5 lines 6-12; col. 6 lines 21-32).

Re. Claim 50, Fukui et al. discloses each of the plurality of modular fiber optic cassettes includes a cassette side end portion 11a that is configured to touch (e.g., abut along their edges) a cassette side end portion of another module fiber optic cassette

CommScope v. Belden
IPR2024-01218
CommScope Exhibit 1036

11a when the plurality of modular fiber optic cassettes are arranged side-by-side along the tray member (Figs 5-8; col. 5 lines 6-12; col. 6 lines 21-32).

Re. Claim 51, Fukui et al. discloses the tray member 10e has a first tray end portion (e.g., left side) and a second tray end portion (e.g., right side) that is configured to be spaced away from the first tray end portion so as to define a tray width portion that extends between the first tray end portion and the second tray end portion (Fig. 9).

Re. Claim 52, Fukui et al. discloses the tray width portion is configured to fit the plurality of modular fiber optic cassettes when the plurality of modular fiber optic cassettes are arranged side-by-side along the tray member (Figs 6-8).

Re. Claim 53, Fukui et al. discloses the tray member 10e is configured such that the plurality of modular fiber optic cassettes fit in the tray width portion when the plurality of modular fiber optic cassettes are arranged side-by-side along the tray member (Figs. 6-8).

Re. Claim 54, Fukui et al. discloses the tray width portion of the tray member 10e is configured to fit at least twelve standard one width (1W) units when the plurality of modular fiber optic cassettes are arranged side-by-side along the tray width portion of the tray member (Figs 6-9).

Re. Claim 55, Fukui et al. discloses the tray member 10e is configured to allow a front cassette portion 14 of each of the plurality of modular fiber optic cassette to be accessed when the plurality of modular fiber optic cassettes are arranged side-by-side along the tray member and when the tray member is in the tray- in position (e.g., front lid 31 operates independently of the sliding mechanism, thereby inherently disclosing an

CommScope v. Belden
IPR2024-01218
CommScope Exhibit 1036

arrangement wherein the lid is open while the tray is in the closed position; Figs. 1, 6, and 8; col. 5 lines 43-45; col. 8 lines 13-16 and 34-44).

Re. Claim 56, Fukui et al. discloses the tray member 10e is configured to allow a rear cassette portion of each of the plurality of modular fiber optic cassette to be accessed when the plurality of modular fiber optic cassettes are arranged side-by-side along the tray member and when the tray member is in the tray- in position (Fig. 7; col. 8 lines 10-13).

Re. Claim 57, Fukui et al. discloses the tray member 10e includes a cassette engaging shoulder (e.g., inside edge of hole 33a) that is configured to fit a channel portion (e.g., channel formed by hook 11i) of each of the plurality of modular fiber optic cassettes (Figs. 2 and 9; col. 8 lines 52-56).

Re. Claim 58, Fukui et al. discloses the cassette engaging shoulder (e.g., inside edge of hole 33a) is located adjacent to a front end portion of the tray member 10e such that the tray member 10e is configured to support one of the plurality of modular fiber optic cassettes at a front location of the tray member 10e (Fig. 9).

Re. Claim 59, Fukui et al. discloses the tray member is configured to be mounted in a rack (col. 9 lines 30-35).

Re. Claim 60, Fukui et al. discloses the tray member is configured to be mounted in a standard U-space rack (col. 9 lines 30-35).

Re. Claim 61, Fukui et al. discloses the tray member 10e comprises a cassette fastening tray portion 33a that is configured to removably secure the tray member 10e to one of the plurality of modular fiber optic cassettes (Figs. 2 and 9; col. 8 lines 52-56).

CommScope v. Belden
IPR2024-01218
CommScope Exhibit 1036

Re. Claim 64, Fukui et al. discloses the tray member is configured to fit the plurality of different modular fiber optic cassette configurations in a standard U-space (col. 9 lines 30-35).

Re. Claim 65, Fukui et al. discloses each of the plurality of different modular fiber optic cassette configurations include a plurality of different sizes of modular fiber optic cassettes (e.g., multiple units 10 are integrally formed, inherently resulting in cassette widths from 1W to 12W).

Re. Claim 66, Fukui et al. discloses the plurality of different sizes of modular fiber optic cassettes include a 2W cassette size that is configured to fit a standard two width (2W) unit relative to the standard one width (1W) unit (Fig. 5; col. 7 lines 23-33).

Re. Claim 67, Fukui et al. discloses the plurality of different sizes of modular fiber optic cassettes include a 3W cassette size that is configured to fit a standard three width (3W) unit relative to the standard one width (1W) unit (e.g., 36 cores with three integral units 10 each having three tiers; col. 7 line 67; col. 8 lines 1-6).

Re. Claim 68, Fukui et al. discloses the plurality of different sizes of modular fiber optic cassettes include a 4W cassette size that is configured to fit a standard four width (4W) unit relative to the standard one width (1W) unit (e.g., 48 cores with three integral units 10 each having three tiers; col. 7 line 67; col. 8 lines 1-6).

Re. Claim 69, Fukui et al. discloses the plurality of different sizes of modular fiber optic cassettes include a 6W cassette size that is configured to fit a standard six width (6W) unit relative to the standard one width (1W) unit (e.g., tray member 10e is configured to receive up to twelve 1W units 10, resulting in inherent cassette width units

CommScope v. Belden
IPR2024-01218
CommScope Exhibit 1036

up to and including 12W, for example a 12W unit results when all of the units 10 across the tray are integrally formed; the prior art inherently discloses 6W units).

Re. Claim 70, Fukui et al. discloses each of the plurality of different sizes of modular fiber optic cassettes is configured to support a fiber optic receptable module 10 that is configured to fit in the standard one width (1W) unit (col. 10 lines 6-10).

Re. Claim 71, Fukui et al. discloses the fiber optic receptable module 10 includes a first module side end portion and a second module side end portion defining a module width portion extending between the first try end portion and second tray end portion, and the module width portion is configured to fit in the standard one width (1W) unit (Figs. 1-2; col. 5 lines 24-27).

Re. Claim 85, Fukui et al. discloses each of the plurality of different sizes of modular fiber optic cassettes is configured to support a fiber optic receptable module that is configured to fit at least four fiber optic plug receiving receptacle portions 13 (Fig. 1; col. 5 lines 24-27).

Re. Claim 86, Fukui et al. discloses each of the plurality of different sizes of modular fiber optic cassettes is configured to support a fiber optic receptable module that is configured to fit at least four fiber optic plug receiving receptacle portions 13 in the standard one width (1W) unit (Fig. 1; col. 5 lines 24-27).

Re. Claim 72, Fukui et al. discloses the plurality of different modular fiber optic cassette configurations comprise a first modular fiber optic cassette configuration that includes six modular 2W standard width unit size cassettes that are each arranged side-by-side of each other along the tray member such that a cassette side end portion of

CommScope v. Belden
IPR2024-01218
CommScope Exhibit 1036

each modular 2W standard width unit size cassette adjacently faces a cassette side end portion of at least one other modular 2W standard width size cassette.

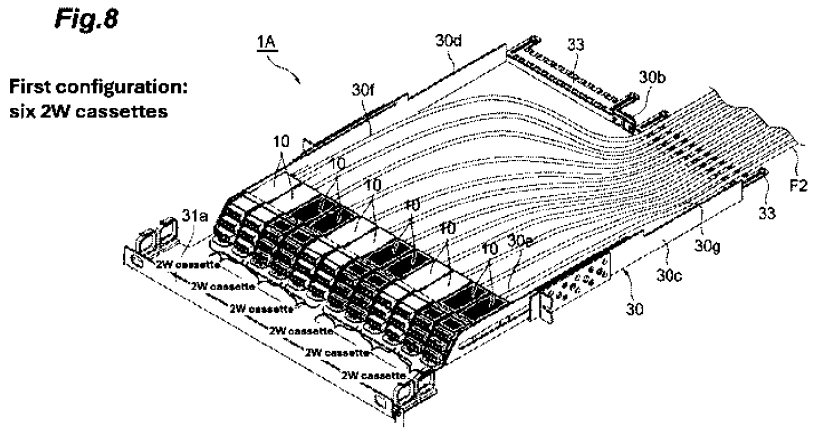

Re. Claim 73, Fukui et al. discloses the plurality of different modular fiber optic cassette configurations comprise a second modular fiber optic cassette configuration that includes four modular 3W standard width unit size cassettes that are each arranged side-by-side of each other in a row along the tray member such that a cassette side end portion of each modular 3W standard width size cassette adjacently faces a cassette side end portion of at least one other modular 3W standard width size cassette.

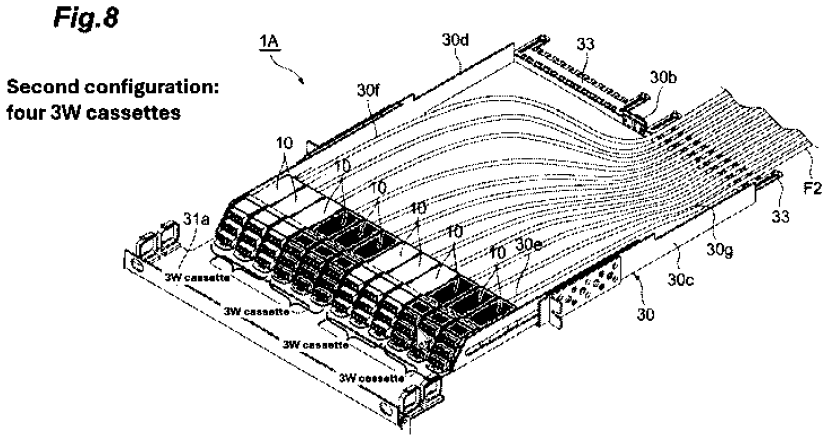

CommScope v. Belden
IPR2024-01218
CommScope Exhibit 1036

Re. Claim 74, Fukui et al. discloses the plurality of different modular fiber optic cassette configurations comprise a third modular fiber optic cassette configuration that includes three modular 4W standard width unit size cassettes that are each arranged side-by-side of each other in a row along the tray member such that a cassette side end portion of each modular 4W standard width size cassette adjacently faces a cassette side end portion of at least one other modular 4W standard width size cassette.

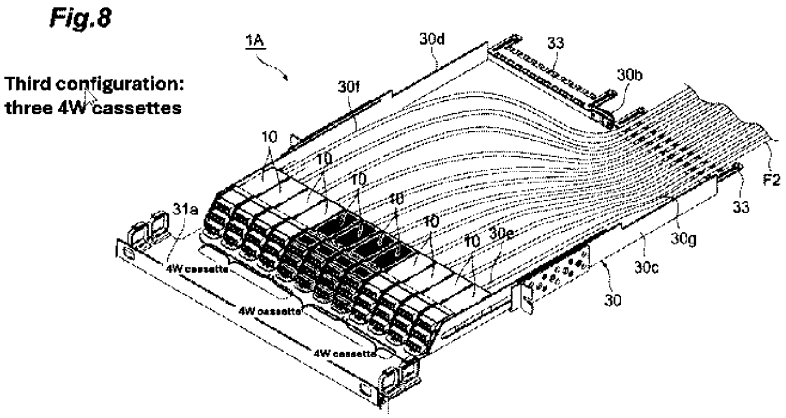

Re. Claim 75, Fukui et al. discloses the plurality of different modular fiber optic cassette configurations comprise a fourth modular fiber optic cassette configuration that includes two modular 6W standard width unit size cassettes that are each arranged side-by-side of each other in a row along the tray member such that a cassette side end portion of one of the two modular 6W standard width size cassettes adjacently faces a cassette side end portion of the other modular 6W standard width size cassette.

CommScope v. Belden
IPR2024-01218
CommScope Exhibit 1036

Fig.8

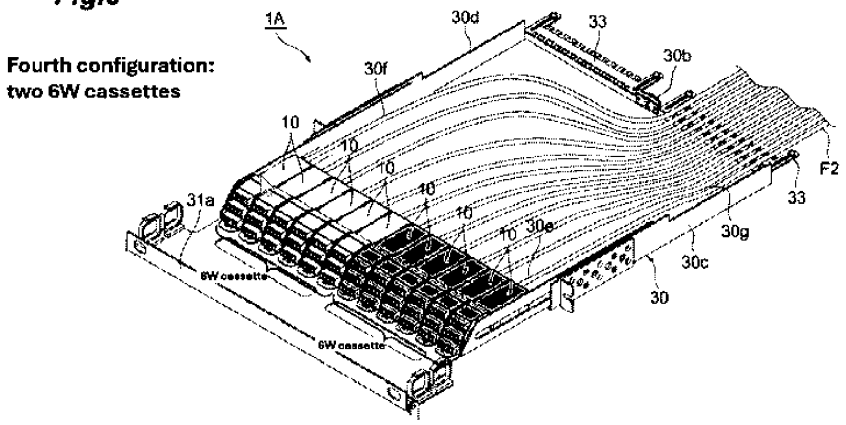

Re. Claim 76, Fukui et al. discloses the plurality of different modular fiber optic cassette configurations comprise a fifth modular fiber optic cassette configuration that includes three modular 2W standard width unit size cassettes, which are each arranged side-by-side of each other in a row along the tray member such that a cassette side end portion of one of the three modular 2W standard width size cassettes adjacently faces a cassette side end portion of one of the other modular 2W standard width size cassette, and one modular 6W standard width unit size cassette that is arranged side-by- side in a row along the tray member with one of the three modular 2W standard width unit size cassettes, such that a cassette side end portion of the one modular 6W standard width unit size cassette adjacently faces a cassette side end portion of one of the other three modular 2W standard width unit size cassettes.

CommScope v. Belden
IPR2024-01218
CommScope Exhibit 1036

Fig.8

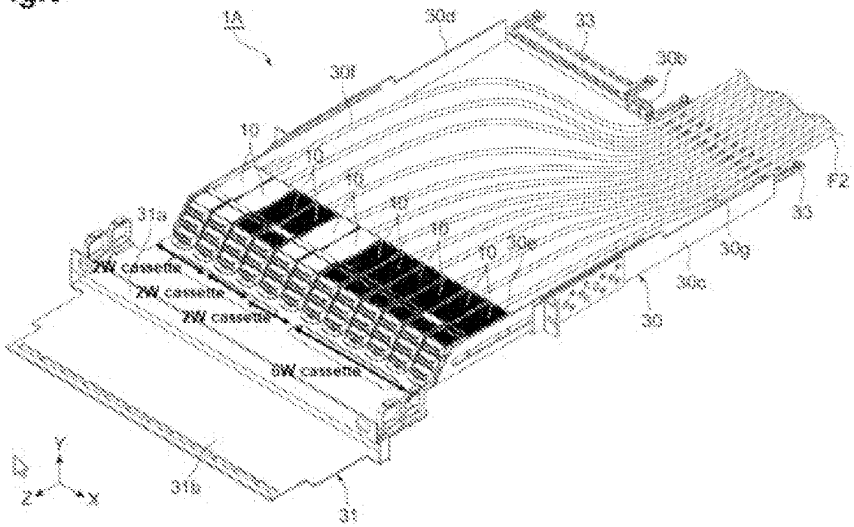

Re. Claim 77, Fukui et al. discloses each modular 2W standard width unit size cassette includes a first 2W cassette side end portion 11d and a second 2W cassette side end portion 11c configured to define a 2W standard cassette width unit that extends between the first 2W cassette side end portion 11d and the second 2W cassette side end portion 11cthat is configured to fit the standard two width (2W) unit (Fig. 5; col. 7 lines 23-33).

Re. Claim 78, Fukui et al. discloses the modular 3W standard width unit size cassette includes a first 3W cassette side end portion and a second 3W cassette side end portion defining a 3W standard cassette width unit extending between the first 3W cassette side end portion and the second 3W cassette side end portion that is configured to fit the standard three width (3W) unit (Figs. 1 and 5; col. 7 lines 65-67; col. 8 lines 1-3).

Re. Claim 79, Fukui et al. discloses the modular 4W standard width unit size cassette includes a first 4W cassette side end portion and a second 4W cassette side

CommScope v. Belden
IPR2024-01218
CommScope Exhibit 1036

end portion defining a 4W standard cassette width unit extending between the first 4W cassette side end portion and the second 4W cassette side end portion that is configured to fit the standard four width (4W) unit (Figs. 1 and 5; col. 7 lines 65-67; col. 8 lines 1-3).

Re. Claim 80, Fukui et al. discloses the modular 6W standard width unit size cassette includes a first 6W cassette side end portion and a second 6W cassette side end portion defining a 6W standard cassette width unit extending between the first 6W cassette side end portion and the second 6W cassette side end portion that is configured to fit the standard six width (6W) unit (Figs. 1 and 5; col. 7 lines 65-67; col. 8 lines 1-3).

Re. Claim 81, Fukui et al. discloses the modular 2W standard width unit size cassette is configured to fit two receptacle modules 10 (Figs. 1 and 5; col. 7 lines 23-33).

Re. Claim 82, Fukui et al. discloses the modular 3W standard width unit size cassette is configured to fit three receptacle modules 10 (Figs. 1 and 5; col. 7 lines 65-67; col. 8 lines 1-3).

Re. Claim 83, Fukui et al. discloses the modular 4W standard width unit size cassette is configured to fit four receptacle modules 10 (Figs. 1 and 5; col. 7 lines 65-67; col. 8 lines 1-3).

Re. Claim 84, Fukui et al. discloses modular 6W standard width unit size cassette is configured to fit six receptacle modules 10 (Figs. 1 and 5; col. 7 lines 65-67; col. 8 lines 1-3).

CommScope v. Belden
IPR2024-01218
CommScope Exhibit 1036

Re. Claim 87, Fukui et al. discloses a tray 30 for providing a plurality of modular fiber optic cassette configurations in a fiber management system (Fig. 9; col. 8 lines 16-32) comprising:

a tray member 30e configured to support a plurality of modular fiber optic cassettes when the plurality of modular fiber optic cassettes are arranged side-by-side along the tray member 30e (Figs. 6-9; col. 8 lines 17-19 and 45-48);

wherein each of the plurality of modular fiber optic cassettes comprise a modular cassette width portion (e.g., "modular cassette width" is measured along the x-direction of the cassette as seen in Figs. 1-5) that is configured to support a plurality of standard modular cassette width units (e.g., coupling multiple cassettes 10 creates larger cassettes 20; Figs. 1-5; col. 7 lines 61-67; col. 8 lines 1-3);

wherein the plurality of standard modular cassette width units comprise:

a standard width unit 10 (1W) (Figs. 1-2; col. 5 lines 24-27);

two standard width units 20 (2W) (Fig. 5; col. 7 lines 23-33);

three standard width units (3W) (e.g., 36 cores with three integral units 10 each having three tiers; col. 7 line 67; col. 8 lines 1-6);

four standard width units (4W) (e.g., 48 cores with three integral units 10 each having three tiers; col. 7 line 67; col. 8 lines 1-6); and

wherein the tray member 10e is configured to support the plurality of modular fiber optic cassettes such that an outer side edge cassette portion 11c of one modular fiber optic cassette is located directly adjacent (e.g., lacking intervening structure) to another outer side edge 11d cassette portion of another modular fiber optic cassette when the plurality of modular fiber optic cassettes are arranged side-by-side along the

CommScope v. Belden
IPR2024-01218
CommScope Exhibit 1036

tray member (e.g., cassettes are fastened to the tray member 30e such that their side faces make direct contact, and therefore are “directly adjacent;” Figs 1 and 5-8; col. 6 lines 21-32);

wherein the tray member 30e is configured to support a plurality of different modular fiber optic cassette configurations that comprise:

a first modular fiber optic cassette configuration that includes six modular 2W cassettes that are each arranged side-by-side of each other along the tray member such that a cassette side end portion of each cassette of the first modular fiber optic cassette configuration adjacently faces a cassette side end portion of another modular cassette of the first modular fiber optic cassette configuration;

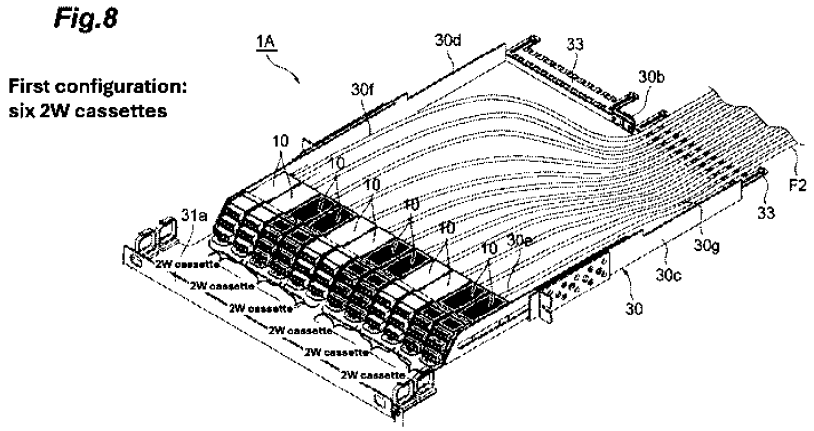

a second modular fiber optic cassette configuration that includes four modular 3W cassettes that are each arranged side-by- side of each other along the tray member such that a cassette side end portion of each cassette of the second modular fiber optic cassette configuration adjacently faces a cassette

CommScope v. Belden
IPR2024-01218
CommScope Exhibit 1036

side end portion of another modular cassette of the second modular fiber optic cassette configuration; and

Fig.8

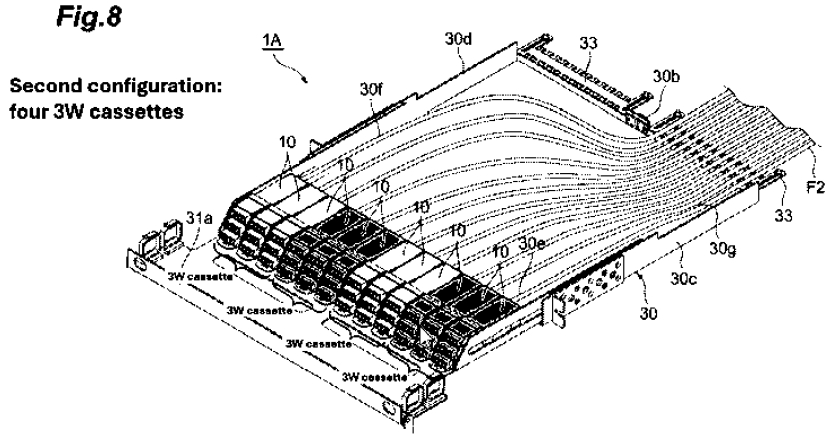

a third modular fiber optic cassette configuration that includes three modular 4W cassettes that are each arranged side-by-side of each other along the tray member such that a cassette side end portion of each cassette of the third modular fiber optic cassette configuration adjacently faces a cassette side end portion of another modular cassette of the third modular fiber optic cassette configuration

Fig.8

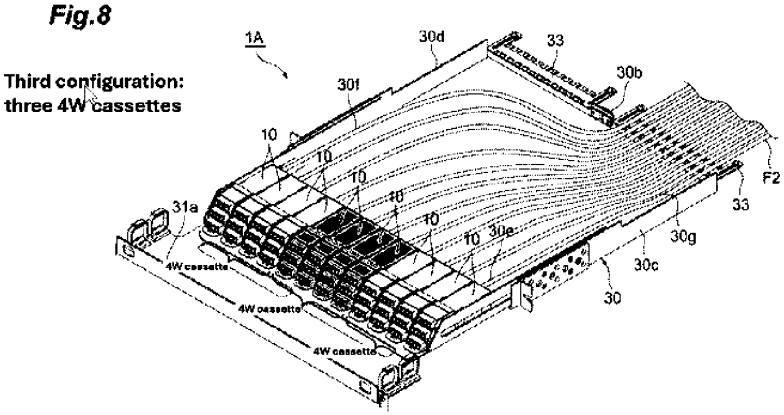

CommScope v. Belden
IPR2024-01218
CommScope Exhibit 1036

Re. Claim 88, Fukui et al. discloses the tray member 30e includes a plurality of cassette engaging tray portions 33b that are each configured to engage a tray engaging cassette portion 11j of each of the plurality of modular fiber optic cassettes (Figs. 2 and 9; col. 8 lines 52-56).

Re. Claim 89, Fukui et al. discloses each of the plurality of cassette engaging tray portions 33b of the tray member 30e are configured to be spaced apart from one another so as to conform to the plurality of standard modular cassette width units 1W, 2W, 3W, 4W, and 6W and allow the tray member to fit the plurality of modular fiber optic cassettes when the plurality of modular fiber optic cassettes are arranged side-by-side along the tray member (Fig. 9; col. 8 lines 52-56);

Re. Claim 90, Fukui et al. discloses each of the plurality of cassette engaging tray portions 33b of the tray member 30e are configured to be spaced apart from one another so as to conform to the standard width unit (1W) (Fig. 9; col. 8 lines 52-56);

Re. Claim 91, Fukui et al. discloses the modular cassette width portion comprises a first modular cassette width portion and a second modular cassette width portion that is different from the first modular cassette width portion (col. 7 lines 65-67; col. 8 lines 1-3).

Re. Claim 92, Fukui et al. discloses the plurality of standard modular cassette width units also comprise six standard width units (6W) (e.g., tray member 10e is configured to receive up to twelve 1W units 10, resulting in inherent cassette width units up to and including 12W, for example a 12W unit results when all of the units 10 across the tray are integrally formed; the prior art inherently discloses 6W units).

CommScope v. Belden
IPR2024-01218
CommScope Exhibit 1036

Re. Claim 93, Fukui et al. discloses the 1W unit is based on a standard SC Duplex width unit that is configured to fit a plurality of different types of LC, SC, and MPO connectors (e.g., "1W" is based on LC quad technology footprint, and thus "based on a standard SC Duplex width unit," since by industry standards the footprint of four (quad) LC connectors is designed to fit the footprint of dual SC connectors; col. 5 lines 24-36).

Re. Claim 94, Fukui et al. discloses the tray member 30e is configured to slidingly move relative to a rack-mount tray receiving space of a rack-mount case 30g/30c/30d between a tray-in position, where the tray member 30e is located in the tray receiving space, and a tray-out position, where the tray member 30e is located at least partially outside the tray receiving space (Fig. 9; col. 8 lines 57-64).

Re. Claim 95, Fukui et al. discloses the tray member 10e is configured to be selectively fastened to each of the plurality of fiber optic cassettes when the plurality of modular fiber optic cassettes are arranged side-by-side along the tray member 10e (Figs. 2 and 9; col. 8 lines 52-56).

Re. Claim 96, Fukui et al. discloses the plurality of different modular fiber optic cassette configurations also comprise:

a fourth modular fiber optic cassette configuration that includes two modular 6W cassettes that are each arranged side-by-side of each other along the tray member such that a cassette side end portion of one of the two modular 6W standard width size cassettes adjacently faces a cassette side end portion of the other modular 6W standard width size cassette;

CommScope v. Belden
IPR2024-01218
CommScope Exhibit 1036

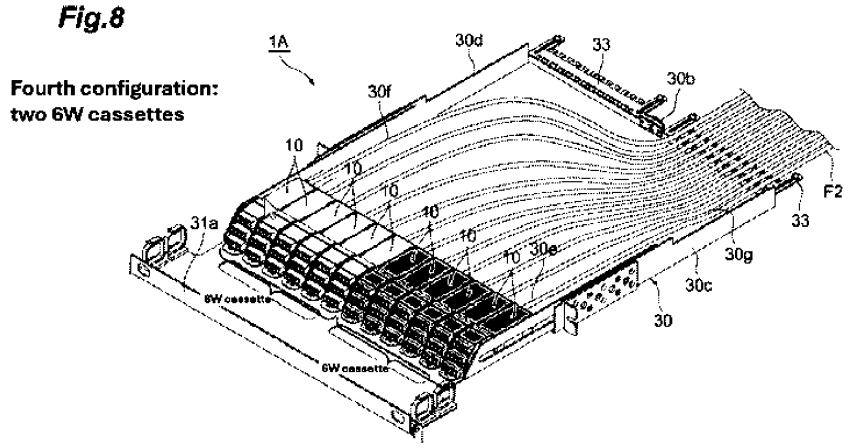

a fifth modular fiber optic cassette configuration that includes one modular 2W cassette, two modular 3W cassettes and one modular 4W cassette that are each arranged side-by-side of each other along the tray member such that a cassette side end portion of each cassette of the fifth modular fiber optic cassette configuration adjacently faces a cassette side end portion of another modular cassette of the fifth modular fiber optic cassette configuration; and

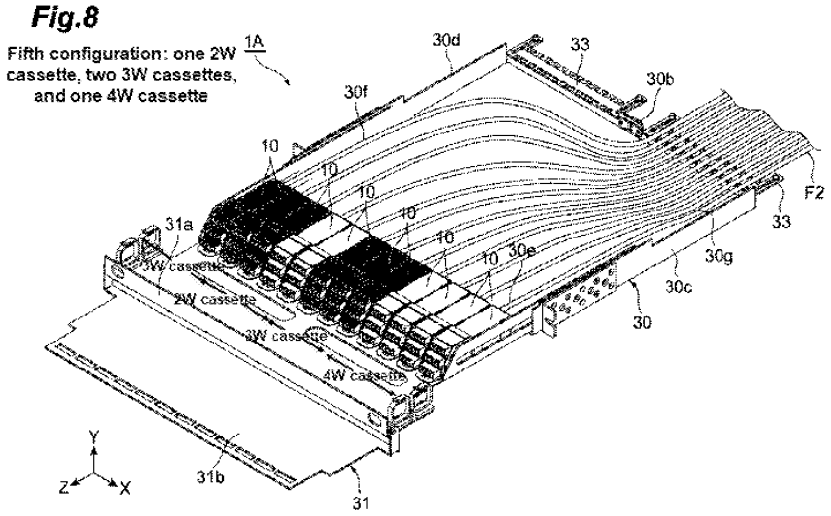

CommScope v. Belden
IPR2024-01218
CommScope Exhibit 1036

a sixth modular fiber optic cassette configuration that includes two modular 2W cassettes and two modular 4W cassettes that are each arranged side-by-side of each other along the tray member such that a cassette side end portion of each cassette of the sixth modular fiber optic cassette configuration adjacently faces a cassette side end portion of another modular cassette of the sixth modular fiber optic cassette configuration.

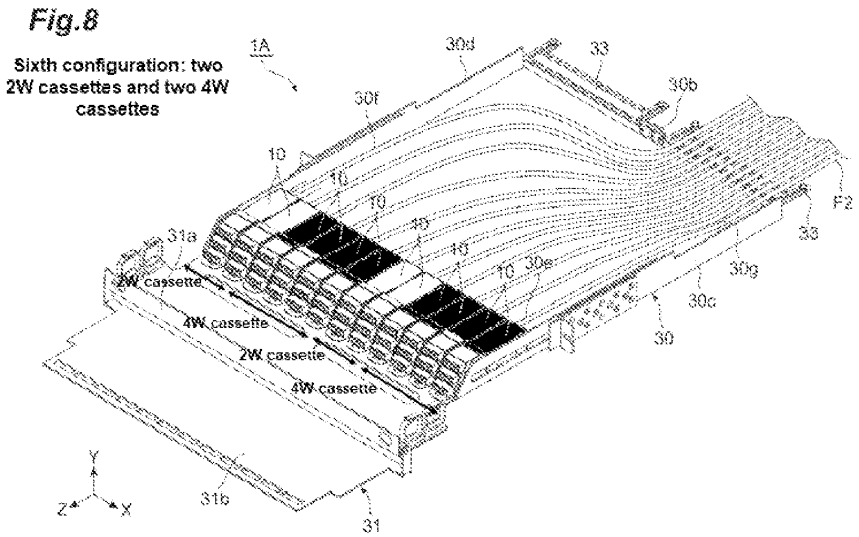

Re. Claim 129, Fukui et al. discloses the modular 6W standard width unit size cassette includes a first 6W cassette side end portion and a second 6W cassette side end portion defining a 6W standard cassette width unit extending between the first 6W cassette side end portion and the second 6W cassette side end portion that is configured to fit the standard six width (6W) unit (Figs. 1 and 5; col. 7 lines 65-67; col. 8 lines 1-3).

CommScope v. Belden
IPR2024-01218
CommScope Exhibit 1036

Re. Claim 133, Fukui et al. discloses modular 6W standard width unit size cassette is configured to fit six receptacle modules 10 (Figs. 1 and 5; col. 7 lines 65-67; col. 8 lines 1-3).

Re. Claim 97, Fukui et al. discloses each of the plurality of modular fiber optic cassettes includes a cassette side end portion 11a that is configured to be located directly adjacent (e.g., lacking intervening structure) to a cassette side end portion 11a of another module fiber optic cassette when the plurality of modular fiber optic cassettes are arranged side- by-side along the tray member 10e (Figs 5-8; col. 5 lines 6-12)col. 6 lines 21-32).

Re. Claim 98, Fukui et al. discloses each of the plurality of modular fiber optic cassettes includes a cassette side end portion 11a that is configured to be located adjacent to a cassette side end portion 11a of another module fiber optic cassette when the plurality of modular fiber optic cassettes are arranged side-by-side along the tray member (Figs 5-8; col. 5 lines 6-12; col. 6 lines 21-32).

Re. Claim 99, Fukui et al. discloses each of the plurality of modular fiber optic cassettes includes a cassette side end portion 11a that is configured to touch (e.g., abut along their edges) a cassette side end portion of another module fiber optic cassette 11a when the plurality of modular fiber optic cassettes are arranged side-by-side along the tray member (Figs 5-8; col. 5 lines 6-12; col. 6 lines 21-32).

Re. Claim 100, Fukui et al. discloses the tray member 10e has a first tray end portion (e.g., left side) and a second tray end portion (e.g., right side) that is configured to be spaced away from the first tray end portion so as to define a tray width portion that extends between the first tray end portion and the second tray end portion (Fig. 9).

CommScope v. Belden
IPR2024-01218
CommScope Exhibit 1036

Re. Claim 101, Fukui et al. discloses the tray width portion is configured to fit the plurality of modular fiber optic cassettes when the plurality of modular fiber optic cassettes are arranged side-by-side along the tray member (Figs 6-8).

Re. Claim 102, Fukui et al. discloses the tray member 10e is configured such that the plurality of modular fiber optic cassettes fit in the tray width portion when the plurality of modular fiber optic cassettes are arranged side-by-side along the tray member (Figs. 6-8).

Re. Claim 103, Fukui et al. discloses the tray width portion of the tray member 10e is configured to fit at least twelve standard one width (1W) units when the plurality of modular fiber optic cassettes are arranged side-by-side along the tray width portion of the tray member (Figs 6-9).

Re. Claim 104, Fukui et al. discloses the tray member 10e is configured to allow a front cassette portion 14 of each of the plurality of modular fiber optic cassette to be accessed when the plurality of modular fiber optic cassettes are arranged side-by-side along the tray member and when the tray member is in the tray- in position (e.g., front lid 31 operates independently of the sliding mechanism, thereby inherently disclosing an arrangement wherein the lid is open while the tray is in the closed position; Figs. 1, 6, and 8; col. 5 lines 43-45; col. 8 lines 13-16 and 34-44).

Re. Claim 105, Fukui et al. discloses the tray member 10e is configured to allow a rear cassette portion of each of the plurality of modular fiber optic cassette to be accessed when the plurality of modular fiber optic cassettes are arranged side-by-side along the tray member and when the tray member is in the tray- in position (Fig. 7; col. 8 lines 10-13).

CommScope v. Belden
IPR2024-01218
CommScope Exhibit 1036

Re. Claim 106, Fukui et al. discloses the tray member 10e includes a cassette engaging shoulder (e.g., inside edge of hole 33a) that is configured to fit a channel portion (e.g., channel formed by hook 11i) of each of the plurality of modular fiber optic cassettes (Figs. 2 and 9; col. 8 lines 52-56).

Re. Claim 107, Fukui et al. discloses the cassette engaging shoulder (e.g., inside edge of hole 33a) is located adjacent to a front end portion of the tray member 10e such that the tray member 10e is configured to support one of the plurality of modular fiber optic cassettes at a front location of the tray member 10e (Fig. 9).

Re. Claim 108, Fukui et al. discloses the tray member is configured to be mounted in a rack (col. 9 lines 30-35).

Re. Claim 109, Fukui et al. discloses the tray member is configured to be mounted in a standard U-space rack (col. 9 lines 30-35).

Re. Claim 110, Fukui et al. discloses the tray member 10e comprises a cassette fastening tray portion 33a that is configured to removably secure the tray member 10e to one of the plurality of modular fiber optic cassettes (Figs. 2 and 9; col. 8 lines 52-56).

Re. Claim 113, Fukui et al. discloses the tray member is configured to fit the plurality of different modular fiber optic cassette configurations in a standard U-space (col. 9 lines 30-35).

Re. Claim 114, Fukui et al. discloses each of the plurality of different modular fiber optic cassette configurations include a plurality of different sizes of modular fiber optic cassettes (e.g., multiple units 10 are integrally formed, inherently resulting in cassette widths from 1W to 12W).

CommScope v. Belden
IPR2024-01218
CommScope Exhibit 1036

Re. Claim 115, Fukui et al. discloses the plurality of different sizes of modular fiber optic cassettes include a 2W cassette size that is configured to fit a standard two width (2W) unit relative to the standard one width (1W) unit (Fig. 5; col. 7 lines 23-33).

Re. Claim 116, Fukui et al. discloses the plurality of different sizes of modular fiber optic cassettes include a 3W cassette size that is configured to fit a standard three width (3W) unit relative to the standard one width (1W) unit (e.g., 36 cores with three integral units 10 each having three tiers; col. 7 line 67; col. 8 lines 1-6).

Re. Claim 117, Fukui et al. discloses the plurality of different sizes of modular fiber optic cassettes include a 4W cassette size that is configured to fit a standard four width (4W) unit relative to the standard one width (1W) unit (e.g., 48 cores with three integral units 10 each having three tiers; col. 7 line 67; col. 8 lines 1-6).

Re. Claim 118, Fukui et al. discloses the plurality of different sizes of modular fiber optic cassettes include a 6W cassette size that is configured to fit a standard six width (6W) unit relative to the standard one width (1W) unit (e.g., tray member 10e is configured to receive up to twelve 1W units 10, resulting in inherent cassette width units up to and including 12W, for example a 12W unit results when all of the units 10 across the tray are integrally formed; the prior art inherently discloses 6W units).

Re. Claim 119, Fukui et al. discloses each of the plurality of different sizes of modular fiber optic cassettes is configured to support a fiber optic receptable module 10 that is configured to fit in the standard one width (1W) unit (col. 10 lines 6-10).

Re. Claim 120, Fukui et al. discloses the fiber optic receptable module 10 includes a first module side end portion and a second module side end portion defining a module width portion extending between the first try end portion and second tray end

CommScope v. Belden
IPR2024-01218
CommScope Exhibit 1036

portion, and the module width portion is configured to fit in the standard one width (1W) unit (Figs. 1-2; col. 5 lines 24-27).

Re. Claim 134, Fukui et al. discloses each of the plurality of different sizes of modular fiber optic cassettes is configured to support a fiber optic receptable module that is configured to fit at least four fiber optic plug receiving receptacle portions 13 (Fig. 1; col. 5 lines 24-27).

Re. Claim 135, Fukui et al. discloses each of the plurality of different sizes of modular fiber optic cassettes is configured to support a fiber optic receptable module that is configured to fit at least four fiber optic plug receiving receptacle portions 13 in the standard one width (1W) unit (Fig. 1; col. 5 lines 24-27).

Re. Claim 121, Fukui et al. discloses the plurality of different modular fiber optic cassette configurations comprise a first modular fiber optic cassette configuration that includes six modular 2W standard width unit size cassettes that are each arranged side-by-side of each other along the tray member such that a cassette side end portion of each modular 2W standard width unit size cassette adjacently faces a cassette side end portion of at least one other modular 2W standard width size cassette.

Fig.8

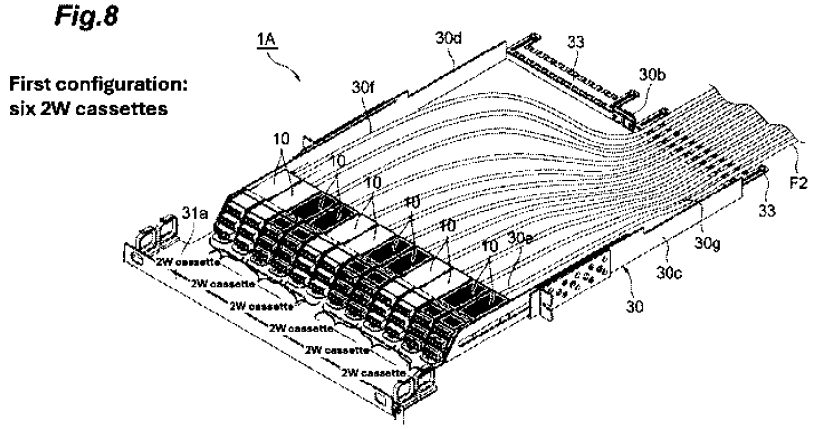

CommScope v. Belden
IPR2024-01218
CommScope Exhibit 1036

Re. Claim 122, Fukui et al. discloses the plurality of different modular fiber optic cassette configurations comprise a second modular fiber optic cassette configuration that includes four modular 3W standard width unit size cassettes that are each arranged side-by-side of each other in a row along the tray member such that a cassette side end portion of each modular 3W standard width size cassette adjacently faces a cassette side end portion of at least one other modular 3W standard width size cassette.

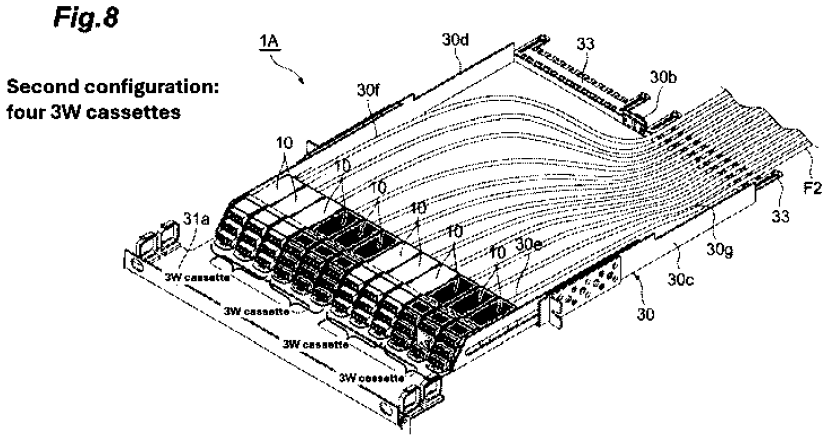

Re. Claim 123, Fukui et al. discloses the plurality of different modular fiber optic cassette configurations comprise a third modular fiber optic cassette configuration that includes three modular 4W standard width unit size cassettes that are each arranged side-by-side of each other in a row along the tray member such that a cassette side end portion of each modular 4W standard width size cassette adjacently faces a cassette side end portion of at least one other modular 4W standard width size cassette.

CommScope v. Belden
IPR2024-01218
CommScope Exhibit 1036

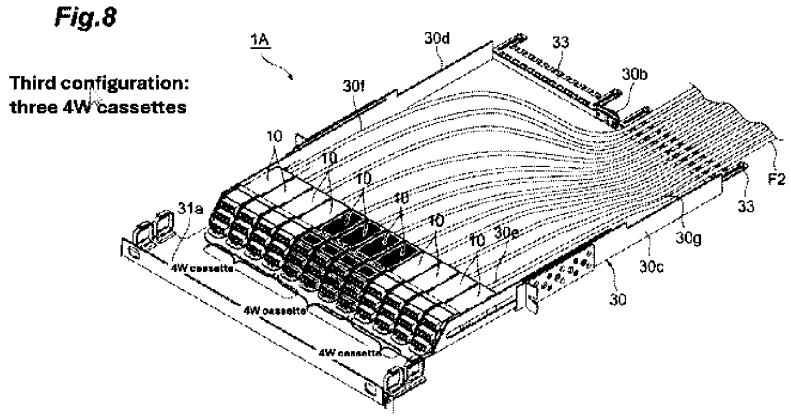

Re. Claim 124, Fukui et al. discloses the plurality of different modular fiber optic cassette configurations comprise a fourth modular fiber optic cassette configuration that includes two modular 6W standard width unit size cassettes that are each arranged side-by-side of each other in a row along the tray member such that a cassette side end portion of one of the two modular 6W standard width size cassettes adjacently faces a cassette side end portion of the other modular 6W standard width size cassette.

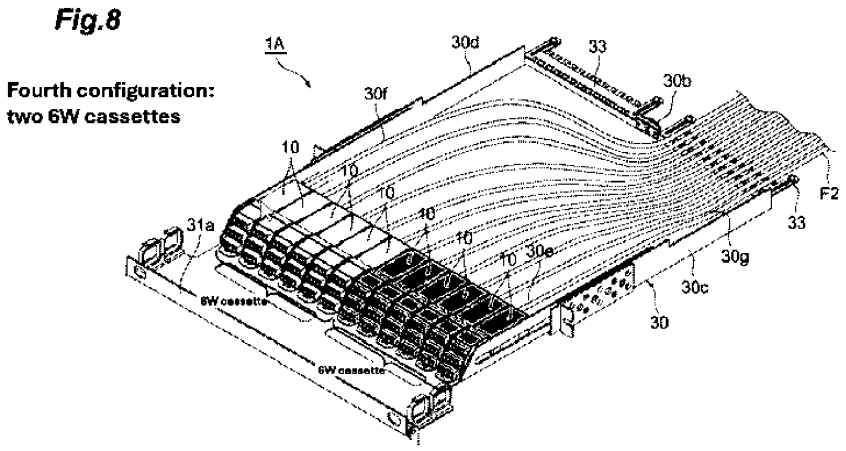

Re. Claim 125, Fukui et al. discloses the plurality of different modular fiber optic cassette configurations comprise a fourth modular fiber optic cassette configuration that includes three modular 2W standard width unit size cassettes, which are each arranged

CommScope v. Belden
IPR2024-01218
CommScope Exhibit 1036

side-by-side of each other in a row along the tray member such that a cassette side end portion of one of the three modular 2W standard width size cassettes adjacently faces a cassette side end portion of one of the other modular 2W standard width size cassette, and one modular 6W standard width unit size cassette that is arranged side-by- side in a row along the tray member with one of the three modular 2W standard width unit size cassettes, such that a cassette side end portion of the one modular 6W standard width unit size cassette adjacently faces a cassette side end portion of one of the other three modular 2W standard width unit size cassettes.

Fig.8

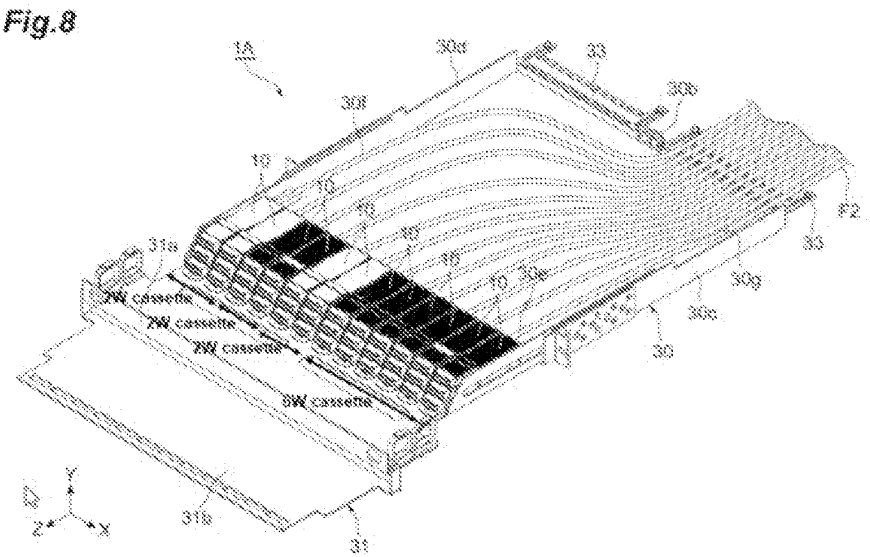

Re. Claim 126, Fukui et al. discloses each modular 2W standard width unit size cassette includes a first 2W cassette side end portion 11d and a second 2W cassette side end portion 11c configured to define a 2W standard cassette width unit that extends between the first 2W cassette side end portion 11d and the second 2W cassette side end portion 11cthat is configured to fit the standard two width (2W) unit (Fig. 5; col. 7 lines 23-33).

CommScope v. Belden
IPR2024-01218
CommScope Exhibit 1036

Re. Claim 127, Fukui et al. discloses the modular 3W standard width unit size cassette includes a first 3W cassette side end portion and a second 3W cassette side end portion defining a 3W standard cassette width unit extending between the first 3W cassette side end portion and the second 3W cassette side end portion that is configured to fit the standard three width (3W) unit (Figs. 1 and 5; col. 7 lines 65-67; col. 8 lines 1-3).

Re. Claim 128, Fukui et al. discloses the modular 4W standard width unit size cassette includes a first 4W cassette side end portion and a second 4W cassette side end portion defining a 4W standard cassette width unit extending between the first 4W cassette side end portion and the second 4W cassette side end portion that is configured to fit the standard four width (4W) unit (Figs. 1 and 5; col. 7 lines 65-67; col. 8 lines 1-3).

Re. Claim 130, Fukui et al. discloses the modular 2W standard width unit size cassette is configured to support two receptacle modules 10 (Figs. 1 and 5; col. 7 lines 23-33).

Re. Claim 131, Fukui et al. discloses the modular 3W standard width unit size cassette is configured to support three receptacle modules 10 (Figs. 1 and 5; col. 7 lines 65-67; col. 8 lines 1-3).

Re. Claim 132, Fukui et al. discloses the modular 4W standard width unit size cassette is configured to support four receptacle modules 10 (Figs. 1 and 5; col. 7 lines 65-67; col. 8 lines 1-3).

CommScope v. Belden
IPR2024-01218
CommScope Exhibit 1036

Re. Claim 130, Fukui et al. discloses the modular 2W standard width unit size cassette is configured to support two receptacle modules 10 (Figs. 1 and 5; col. 7 lines 23-33).

Re. Claim 131, Fukui et al. discloses the modular 3W standard width unit size cassette is configured to support three receptacle modules 10 (Figs. 1 and 5; col. 7 lines 23-33).

Re. Claim 132, Fukui et al. discloses the modular 4W standard width unit size cassette is configured to support four receptacle modules 10 (Figs. 1 and 5; col. 7 lines 23-33).

Claim Rejections - 35 USC § 103

In the event the determination of the status of the application as subject to AIA 35 U.S.C. 102 and 103 (or as subject to pre-AIA 35 U.S.C. 102 and 103) is incorrect, any correction of the statutory basis (i.e., changing from AIA to pre-AIA) for the rejection will not be considered a new ground of rejection if the prior art relied upon, and the rationale supporting the rejection, would be the same under either status.

The following is a quotation of 35 U.S.C. 103 which forms the basis for all obviousness rejections set forth in this Office action:

> A patent for a claimed invention may not be obtained, notwithstanding that the claimed invention is not identically disclosed as set forth in section 102, if the differences between the claimed invention and the prior art are such that the claimed invention as a whole would have been obvious before the effective filing date of the claimed invention to a person having ordinary skill in the art to which the claimed invention pertains. Patentability shall not be negated by the manner in which the invention was made.

The factual inquiries for establishing a background for determining obviousness under 35 U.S.C. 103 are summarized as follows:

CommScope v. Belden
IPR2024-01218
CommScope Exhibit 1036

1. Determining the scope and contents of the prior art.

2. Ascertaining the differences between the prior art and the claims at issue.

3. Resolving the level of ordinary skill in the pertinent art.

4. Considering objective evidence present in the application indicating obviousness or nonobviousness.

Claim(s) 17, 63, and 112 is/are rejected under 35 U.S.C. 103 as being unpatentable over Fukui et al. (US 10,101,551 B2) and Murray et al. (US 2016/0231525 A1).

Re. Claims 17, 63, and 112, Fukui et al. discloses the tray as discussed above, but fails to disclose an arrangement wherein the tray member is configured to be removably secured to *an elongate cable management bracket that includes a cable management loop that is configured to be positioned in front of and to a side of an optic plug receiving receptacle portion of a modular cassette when the cable management loop is removably secured to the tray member*.

Murray et al. discloses a tray member (Figs. 1, 93, 94) is configured to be removably secured to an elongate cable management bracket 870 that includes a cable management loop that is configured to be positioned in front of and to a side of an optic plug receiving receptacle portion of a modular cassette 160 when the cable management loop is removably secured to the tray member (Figs. 93-95; [0197], [0199]).

The claimed arrangement would have been obvious to one of ordinary skill in the art before the effective filing date of the current invention, since the same provides cable

CommScope v. Belden
IPR2024-01218
CommScope Exhibit 1036

management and organization to the arrangement, thereby making the arrangement accessible for later management (Murray et al.: [0002]).

Conclusion

The prior art made of record and not relied upon is considered pertinent to applicant's disclosure. See the attached PTO-892.

Any inquiry concerning this communication or earlier communications from the examiner should be directed to R. PEACE whose telephone number is (571)272-8580. The examiner can normally be reached 9-5 pm.

Examiner interviews are available via telephone, in-person, and video conferencing using a USPTO supplied web-based collaboration tool. To schedule an interview, applicant is encouraged to use the USPTO Automated Interview Request (AIR) at http://www.uspto.gov/interviewpractice.

If attempts to reach the examiner by telephone are unsuccessful, the examiner's supervisor, Uyen-Chau Le can be reached on (571) 272-2397. The fax phone number for the organization where this application or proceeding is assigned is 571-273-8300.

Information regarding the status of published or unpublished applications may be obtained from Patent Center. Unpublished application information in Patent Center is available to registered users. To file and manage patent submissions in Patent Center, visit: https://patentcenter.uspto.gov. Visit https://www.uspto.gov/patents/apply/patent-center for more information about Patent Center and https://www.uspto.gov/patents/docx for information about filing in DOCX format. For additional questions, contact the Electronic Business Center (EBC) at 866-217-9197

CommScope v. Belden
IPR2024-01218
CommScope Exhibit 1036

(toll-free). If you would like assistance from a USPTO Customer Service

Representative, call 800-786-9199 (IN USA OR CANADA) or 571-272-1000.

/RHONDA S PEACE/
Primary Examiner, Art Unit 2874
9/27/24

CommScope v. Belden
IPR2024-01218
CommScope Exhibit 1036

Claims

1. A tray for providing a plurality of modular fiber optic cassette configurations in a fiber management system comprising:

a tray member configured to fit a plurality of modular fiber optic cassettes when the plurality of modular fiber optic cassettes are arranged side-by-side along the tray member;

wherein the tray member includes a plurality of cassette engaging tray portions that are each configured to engage a tray engaging cassette portion of each of the plurality of modular fiber optic cassettes;

wherein each of the plurality of modular fiber optic cassettes comprise a modular cassette width portion that is configured to fit a plurality of standard modular cassette width units;

wherein the plurality of standard modular cassette width units comprise:

a standard width unit (1W);
two standard width units (2W);
three standard width units (3W);
four standard width units (4W); and
six standard width units (6W);

wherein the modular cassette width portion comprises a first modular cassette width portion and a second modular cassette width portion that is different from the first modular cassette width portion;

wherein the tray member is configured to support the plurality of modular fiber optic cassettes such that an outer side edge cassette portion of one modular fiber optic cassette is located directly adjacent to another outer side edge cassette portion of another modular fiber optic cassette when the plurality of modular fiber optic cassettes are arranged side-by-side along the tray member;

CommScope v. Belden
IPR2024-01218
CommScope Exhibit 1036

wherein the 1W unit is based on a standard SC Duplex width unit that is configured to fit a plurality of different types of LC, SC, and MPO connectors;

wherein each of the plurality of cassette engaging tray portions of the tray member are configured to be spaced apart from one another so as to conform to the standard width unit (1W);

wherein each of the plurality of cassette engaging tray portions of the tray member are configured to be spaced apart from one another so as to conform to the plurality of standard modular cassette width units 1W, 2W, 3W, 4W, and 6W and allow the tray member to fit the plurality of modular fiber optic cassettes when the plurality of modular fiber optic cassettes are arranged side-by-side along the tray member;

wherein the tray member is configured to fit a plurality of different modular fiber optic cassette configurations that comprise:

a first modular fiber optic cassette configuration that includes six modular 2W cassettes that are each arranged side-by-side of each other along the tray member such that a cassette side end portion of each cassette of the first modular fiber optic cassette configuration adjacently faces a cassette side end portion of another modular cassette of the first modular fiber optic cassette configuration;

a second modular fiber optic cassette configuration that includes four modular 3W cassettes that are each arranged side-by-side of each other along the tray member such that a cassette side end portion of each cassette of the second modular fiber optic cassette configuration adjacently faces a cassette side end portion of another modular cassette of the second modular fiber optic cassette configuration;

a third modular fiber optic cassette configuration that includes three modular 4W cassettes that are each arranged side-by-side of each other along the tray member such that a cassette side end

CommScope v. Belden
IPR2024-01218
CommScope Exhibit 1036

portion of each cassette of the third modular fiber optic cassette configuration adjacently faces a cassette side end portion of another modular cassette of the third modular fiber optic cassette configuration;

a fourth modular fiber optic cassette configuration that includes two modular 6W cassettes that are each arranged side-by-side of each other along the tray member such that a cassette side end portion of each cassette of the fourth modular fiber optic cassette configuration adjacently faces a cassette side end portion of another modular cassette of the fourth modular fiber optic cassette configuration;

a fifth modular fiber optic cassette configuration that includes one modular 2W cassette, two modular 3W cassettes and one modular 4W cassette that are each arranged side-by-side of each other along the tray member such that a cassette side end portion of each cassette of the fifth modular fiber optic cassette configuration adjacently faces a cassette side end portion of another modular cassette of the fifth modular fiber optic cassette configuration; and

a sixth modular fiber optic cassette configuration that includes two modular 2W cassettes and two modular 4W cassettes that are each arranged side-by-side of each other along the tray member such that a cassette side end portion of each cassette of the sixth modular fiber optic cassette configuration adjacently faces a cassette side end portion of another modular cassette of the sixth modular fiber optic cassette configuration; and

wherein the tray member is configured to slidingly move relative to a rack-mount tray receiving space of a rack-mount case between a tray-in position, where the tray member is located in the tray receiving space, and a tray-out position, where the tray member is located at least partially outside the tray receiving space.

CommScope v. Belden
IPR2024-01218
CommScope Exhibit 1036

2. The tray of claim 1, wherein each of the plurality of modular fiber optic cassettes includes a cassette side end portion that is configured to be located directly adjacent to a cassette side end portion of another module fiber optic cassette when the plurality of modular fiber optic cassettes are arranged side-by-side along the tray member.

3. The tray of claim 1, wherein each of the plurality of modular fiber optic cassettes includes a cassette side end portion that is configured to be located adjacent to a cassette side end portion of another module fiber optic cassette when the plurality of modular fiber optic cassettes are arranged side-by-side along the tray member.

4. The tray of claim 1, wherein each of the plurality of modular fiber optic cassettes includes a cassette side end portion that is configured to touch a cassette side end portion of another module fiber optic cassette when the plurality of modular fiber optic cassettes are arranged side-by-side along the tray member.

5. The tray of claim 1, wherein the tray member has a first tray end portion and a second tray end portion that is configured to be spaced away from the first tray end portion so as to define a tray width portion that extends between the first tray end portion and the second tray end portion.

6. The tray of claim 5, wherein the trade width portion is configured to fit the plurality of modular fiber optic cassettes when the plurality of modular fiber optic cassettes are arranged side-by-side along the tray member.

7. The tray of claim 5, wherein tray member is configured such that the plurality of modular fiber optic cassettes fit in the tray width portion when the plurality

CommScope v. Belden
IPR2024-01218
CommScope Exhibit 1036

of modular fiber optic cassettes are arranged side-by-side along the tray member.

8. The tray of claim 5, wherein the tray width portion of the tray member is configured to fit at least twelve standard one width (1W) units when the plurality of modular fiber optic cassettes are arranged side-by-side along the tray width portion of the tray member.

9. The tray of claim 1, wherein the tray member is configured to allow a front cassette portion of each of the plurality of modular fiber optic cassette to be accessed when the plurality of modular fiber optic cassettes are arranged side-by-side along the tray member and when the tray member is in the tray-in position.

10. The tray of claim 1, wherein the tray member is configured to allow a rear cassette portion of each of the plurality of modular fiber optic cassette to be accessed when the plurality of modular fiber optic cassettes are arranged side-by-side along the tray member and when the tray member is in the tray-in position.

11. The tray of claim 1, wherein the tray member includes a cassette engaging shoulder that is configured to fit a channel portion of each of the plurality of modular fiber optic cassettes.

12. The tray of claim 11, wherein the cassette engaging shoulder is located adjacent to a front end portion of the tray member such that the tray member is configured to support one of the plurality of modular fiber optic cassettes at a front location of the tray member.

CommScope v. Belden
IPR2024-01218
CommScope Exhibit 1036

13. The tray of claim 1, wherein the tray member is configured to be mounted in a rack.

14. The tray of claim 1, wherein the tray member is configured to be mounted in a standard U-space rack.

15. The tray of claim 1, wherein the tray member comprises a cassette fastening tray portion that is configured to removably secure the tray member to one of the plurality of modular fiber optic cassettes.

16. The tray of claim 15, wherein the cassette fastening tray portion comprises a magnet.

17. The tray of claim 1, wherein the tray member is configured to be removably secured to an elongate cable management bracket that includes a cable management loop that is configured to be positioned in front of and to a side of an optic plug receiving receptacle portion of a modular cassette when the cable management loop is removably secured to the tray member.

18. The tray of claim 1, wherein the tray member is configured to fit the plurality of different modular fiber optic cassette configurations in a standard U-space.

19. The tray of claim 1, wherein each of the plurality of different modular fiber optic cassette configurations include a plurality of different sizes of modular fiber optic cassettes.

20. The tray of claim 19, wherein the plurality of different sizes of modular fiber optic cassettes include a 2W cassette size that is configured to fit a standard two width (2W) unit relative to the standard one width (1W) unit.

CommScope v. Belden
IPR2024-01218
CommScope Exhibit 1036

21. The tray of claim 19, wherein the plurality of different sizes of modular fiber optic cassettes include a 3W cassette size that is configured to fit a standard three width (3W) unit relative to the standard one width (1W) unit.

22. The tray of claim 19, wherein the plurality of different sizes of modular fiber optic cassettes include a 4W cassette size that is configured to fit a standard four width (4W) unit relative to the standard one width (1W) unit.

23. The tray of claim 19, wherein the plurality of different sizes of modular fiber optic cassettes include a 6W cassette size that is configured to fit a standard six width (6W) unit relative to the standard one width (1W) unit.

24. The tray of claim 19, wherein each of the plurality of different sizes of modular fiber optic cassettes is configured to support a fiber optic receptable module that is configured to fit in the standard one width (1W) unit.

25. The tray of claim 24, wherein the fiber optic receptable module includes a first module side end portion and a second module side end portion defining a module width portion extending between the first try end portion and second tray end portion, and the module width portion is configured to fit in the standard one width (1W) unit.

26. The tray of claim 1, wherein the plurality of different modular fiber optic cassette configurations comprise a first modular fiber optic cassette configuration that includes six modular 2W standard width unit size cassettes that are each arranged side-by-side of each other along the tray member such that a cassette side end portion of each modular 2W standard width unit size cassette adjacently faces a cassette side end portion of at least one other modular 2W standard width size cassette.

CommScope v. Belden
IPR2024-01218
CommScope Exhibit 1036

27. The tray of claim 26, wherein the plurality of different modular fiber optic cassette configurations comprise a second modular fiber optic cassette configuration that includes four modular 3W standard width unit size cassettes that are each arranged side-by-side of each other in a row along the tray member such that a cassette side end portion of each modular 3W standard width size cassette adjacently faces a cassette side end portion of at least one other modular 3W standard width size cassette.

28. The tray of claim 27, wherein the plurality of different modular fiber optic cassette configurations comprise a third modular fiber optic cassette configuration that includes three modular 4W standard width unit size cassettes that are each arranged side-by-side of each other in a row along the tray member such that a cassette side end portion of each modular 4W standard width size cassette adjacently faces a cassette side end portion of at least one other modular 4W standard width size cassette.

29. The tray of claim 28, wherein the plurality of different modular fiber optic cassette configurations comprise a fourth modular fiber optic cassette configuration that includes two modular 6W standard width unit size cassettes that are each arranged side-by-side of each other in a row along the tray member such that a cassette side end portion of one of the two modular 6W standard width size cassettes adjacently faces a cassette side end portion of the other modular 6W standard width size cassette.

30. The tray of claim 29, wherein the plurality of different modular fiber optic cassette configurations comprise a seventh modular fiber optic cassette configuration that includes three modular 2W standard width unit size cassettes, which are each arranged side-by-side of each other in a row along the tray member such that a cassette side end portion of one of the three

CommScope v. Belden
IPR2024-01218
CommScope Exhibit 1036

modular 2W standard width size cassettes adjacently faces a cassette side end portion of one of the other modular 2W standard width size cassette, and one modular 6W standard width unit size cassette that is arranged side-by-side in a row along the tray member with one of the three modular 2W standard width unit size cassettes, such that a cassette side end portion of the one modular 6W standard width unit size cassette adjacently faces a cassette side end portion of one of the other three modular 2W standard width unit size cassettes.

31. The tray of claim 1, wherein each modular 2W standard width unit size cassette includes a first 2W cassette side end portion and a second 2W cassette side end portion configured to define a 2W standard cassette width unit that extends between the first 2W cassette side end portion and the second 2W cassette side end portion that is configured to fit the standard two width (2W) unit.

32. The tray of claim 1, wherein the modular 3W standard width unit size cassette includes a first 3W cassette side end portion and a second 3W cassette side end portion defining a 3W standard cassette width unit extending between the first 3W cassette side end portion and the second 3W cassette side end portion that is configured to fit the standard three width (3W) unit.

33. The tray of claim 1, wherein the modular 4W standard width unit size cassette includes a first 4W cassette side end portion and a second 4W cassette side end portion defining a 4W standard cassette width unit extending between the first 4W cassette side end portion and the second 4W cassette side end portion that is configured to fit the standard four width (4W) unit.

34. The tray of claim 1, wherein the modular 6W standard width unit size cassette includes a first 6W cassette side end portion and a second 6W cassette side

end portion defining a 6W standard cassette width unit extending between the first 6W cassette side end portion and the second 6W cassette side end portion that is configured to fit the standard six width (6W) unit.

35. The tray of claim 1, wherein the modular 2W standard width unit size cassette is configured to fit two receptacle modules.

36. The tray of claim 1, wherein the modular 3W standard width unit size cassette is configured to fit three receptacle modules.

37. The tray of claim 1, wherein the modular 4W standard width unit size cassette is configured to fit four receptacle modules.

38. The tray of claim 1, wherein the modular 6W standard width unit size cassette is configured to fit six receptacle modules.

39. The tray of claim 19, wherein each of the plurality of different sizes of modular fiber optic cassettes is configured to support a fiber optic receptable module that is configured to fit at least four fiber optic plug receiving receptacle portions.

40. The tray of claim 19, wherein each of the plurality of different sizes of modular fiber optic cassettes is configured to support a fiber optic receptable module that is configured to fit at least four fiber optic plug receiving receptacle portions in the standard one width (1W) unit.

CommScope v. Belden
IPR2024-01218
CommScope Exhibit 1036

41. A tray for providing a plurality of modular fiber optic cassette configurations in a fiber management system comprising:

a tray member configured to fit a plurality of modular fiber optic cassettes when the plurality of modular fiber optic cassettes are arranged side-by-side along the tray member;

wherein the tray member includes a plurality of cassette engaging tray portions that are each configured to engage a tray engaging cassette portion of each of the plurality of modular fiber optic cassettes;

wherein each of the plurality of modular fiber optic cassettes comprise a modular cassette width portion that is configured to fit a plurality of standard modular cassette width units;

wherein the plurality of standard modular cassette width units comprise a standard width unit (1W), two standard width units (2W), three standard width units (3W), and four standard width units (4W);

wherein the modular cassette width portion comprises a first modular cassette width portion and a second modular cassette width portion that is different from the first modular cassette width portion;

wherein the tray member is configured to support the plurality of modular fiber optic cassettes such that an outer side edge cassette portion of one modular fiber optic cassette is located directly adjacent to another outer side edge cassette portion of another modular fiber optic cassette when the plurality of modular fiber optic cassettes are arranged side-by-side along the tray member;

wherein each of the plurality of cassette engaging tray portions of the tray member are configured to be spaced apart from one another so as to conform to the plurality of standard modular cassette width units 1W, 2W, 3W, and 4W and allow the tray member to fit the plurality of modular fiber optic cassettes when the plurality of modular fiber optic cassettes are arranged side-by-side along the tray member; and

CommScope v. Belden
IPR2024-01218
CommScope Exhibit 1036

wherein the tray member is configured to fit a plurality of different modular fiber optic cassette configurations that comprise:

a first modular fiber optic cassette configuration that includes six modular 2W cassettes that are each arranged side-by-side of each other along the tray member such that a cassette side end portion of each cassette of the first modular fiber optic cassette configuration adjacently faces a cassette side end portion of another modular cassette of the first modular fiber optic cassette configuration;

a second modular fiber optic cassette configuration that includes four modular 3W cassettes that are each arranged side-by-side of each other along the tray member such that a cassette side end portion of each cassette of the second modular fiber optic cassette configuration adjacently faces a cassette side end portion of another modular cassette of the second modular fiber optic cassette configuration;

a third modular fiber optic cassette configuration that includes three modular 4W cassettes that are each arranged side-by-side of each other along the tray member such that a cassette side end portion of each cassette of the third modular fiber optic cassette configuration adjacently faces a cassette side end portion of another modular cassette of the third modular fiber optic cassette configuration; and

a fourth modular fiber optic cassette configuration that includes two modular 6W cassettes that are each arranged side-by-side of each other along the tray member such that a cassette side end portion of each cassette of the fourth modular fiber optic cassette configuration adjacently faces a cassette side end portion of another modular cassette of the fourth modular fiber optic cassette configuration.

CommScope v. Belden
IPR2024-01218
CommScope Exhibit 1036

42. The tray of claim 41, wherein the plurality of standard modular cassette width units also comprise six standard width units (6W).

43. The tray of claim 41, wherein the 1W unit is based on a standard SC Duplex width unit that is configured to fit a plurality of different types of LC, SC, and MPO connectors.

44. The tray of claim 41, wherein each of the plurality of cassette engaging tray portions of the tray member are configured to be spaced apart from one another so as to conform to the standard width unit (1W).

45. The tray of claim 41, wherein the tray member is configured to slidingly move relative to a rack-mount tray receiving space of a rack-mount case between a tray-in position, where the tray member is located in the tray receiving space, and a tray-out position, where the tray member is located at least partially outside the tray receiving space.

46. The tray of claim 41, wherein the tray member is configured to be selectively fastened to each of the plurality of fiber optic cassettes when the plurality of modular fiber optic cassettes are arranged side-by-side along the tray member.

47. The tray of claim 41, wherein the plurality of different modular fiber optic cassette configurations also comprise:

a fifth modular fiber optic cassette configuration that includes one modular 2W cassette, two modular 3W cassettes and one modular 4W cassette that are each arranged side-by-side of each other along the tray member such that a cassette side end portion of each cassette of the fifth modular fiber optic cassette configuration adjacently faces a cassette side

CommScope v. Belden
IPR2024-01218
CommScope Exhibit 1036

end portion of another modular cassette of the fifth modular fiber optic cassette configuration; and

a sixth modular fiber optic cassette configuration that includes two modular 2W cassettes and two modular 4W cassettes that are each arranged side-by-side of each other along the tray member such that a cassette side end portion of each cassette of the sixth modular fiber optic cassette configuration adjacently faces a cassette side end portion of another modular cassette of the sixth modular fiber optic cassette configuration.

48. The tray of claim 41, wherein each of the plurality of modular fiber optic cassettes includes a cassette side end portion that is configured to be located directly adjacent to a cassette side end portion of another module fiber optic cassette when the plurality of modular fiber optic cassettes are arranged side-by-side along the tray member.

49. The tray of claim 41, wherein each of the plurality of modular fiber optic cassettes includes a cassette side end portion that is configured to be located adjacent to a cassette side end portion of another module fiber optic cassette when the plurality of modular fiber optic cassettes are arranged side-by-side along the tray member.

50. The tray of claim 41, wherein each of the plurality of modular fiber optic cassettes includes a cassette side end portion that is configured to touch a cassette side end portion of another module fiber optic cassette when the plurality of modular fiber optic cassettes are arranged side-by-side along the tray member.

51. The tray of claim 41, wherein the tray member has a first tray end portion and a second tray end portion that is configured to be spaced away from the first

CommScope v. Belden
IPR2024-01218
CommScope Exhibit 1036

tray end portion so as to define a tray width portion that extends between the first tray end portion and the second tray end portion.

52. The tray of claim 51, wherein the trade width portion is configured to fit the plurality of modular fiber optic cassettes when the plurality of modular fiber optic cassettes are arranged side-by-side along the tray member.

53. The tray of claim 51, wherein tray member is configured such that the plurality of modular fiber optic cassettes fit in the tray width portion when the plurality of modular fiber optic cassettes are arranged side-by-side along the tray member.

54. The tray of claim 51, wherein the tray width portion of the tray member is configured to fit at least twelve standard one width (1W) units when the plurality of modular fiber optic cassettes are arranged side-by-side along the tray width portion of the tray member.

55. The tray of claim 41, wherein the tray member is configured to allow a front cassette portion of each of the plurality of modular fiber optic cassette to be accessed when the plurality of modular fiber optic cassettes are arranged side-by-side along the tray member and when the tray member is in the tray-in position.

56. The tray of claim 41, wherein the tray member is configured to allow a rear cassette portion of each of the plurality of modular fiber optic cassette to be accessed when the plurality of modular fiber optic cassettes are arranged side-by-side along the tray member and when the tray member is in the tray-in position.

57. The tray of claim 41, wherein the tray member includes a cassette engaging shoulder that is configured to fit a channel portion of each of the plurality of modular fiber optic cassettes.

58. The tray of claim 57, wherein the cassette engaging shoulder is located adjacent to a front end portion of the tray member such that the tray member is configured to support one of the plurality of modular fiber optic cassettes at a front location of the tray member.

59. The tray of claim 41, wherein the tray member is configured to be mounted in a rack.

60. The tray of claim 41, wherein the tray member is configured to be mounted in a standard U-space rack.

61. The tray of claim 41, wherein the tray member comprises a cassette fastening tray portion that is configured to removably secure the tray member to one of the plurality of modular fiber optic cassettes.

62. The tray of claim 61, wherein the cassette fastening tray portion comprises a magnet.

63. The tray of claim 41, wherein the tray member is configured to be removably secured to an elongate cable management bracket that includes a cable management loop that is configured to be positioned in front of and to a side of an optic plug receiving receptacle portion of a modular cassette when the cable management loop is removably secured to the tray member.

CommScope v. Belden
IPR2024-01218
CommScope Exhibit 1036

64. The tray of claim 41, wherein the tray member is configured to fit the plurality of different modular fiber optic cassette configurations in a standard U-space.

65. The tray of claim 41, wherein each of the plurality of different modular fiber optic cassette configurations include a plurality of different sizes of modular fiber optic cassettes.

66. The tray of claim 65, wherein the plurality of different sizes of modular fiber optic cassettes include a 2W cassette size that is configured to fit a standard two width (2W) unit relative to the standard one width (1W) unit.

67. The tray of claim 65, wherein the plurality of different sizes of modular fiber optic cassettes include a 3W cassette size that is configured to fit a standard three width (3W) unit relative to the standard one width (1W) unit.

68. The tray of claim 65, wherein the plurality of different sizes of modular fiber optic cassettes include a 4W cassette size that is configured to fit a standard four width (4W) unit relative to the standard one width (1W) unit.

69. The tray of claim 65, wherein the plurality of different sizes of modular fiber optic cassettes include a 6W cassette size that is configured to fit a standard six width (6W) unit relative to the standard one width (1W) unit.

70. The tray of claim 65, wherein each of the plurality of different sizes of modular fiber optic cassettes is configured to support a fiber optic receptable module that is configured to fit in the standard one width (1W) unit.

71. The tray of claim 70, wherein the fiber optic receptable module includes a first module side end portion and a second module side end portion defining a module width portion extending between the first try end portion and second

tray end portion, and the module width portion is configured to fit in the standard one width (1W) unit.

72. The tray of claim 41, wherein the plurality of different modular fiber optic cassette configurations comprise a first modular fiber optic cassette configuration that includes six modular 2W standard width unit size cassettes that are each arranged side-by-side of each other along the tray member such that a cassette side end portion of each modular 2W standard width unit size cassette adjacently faces a cassette side end portion of at least one other modular 2W standard width size cassette.

73. The tray of claim 72, wherein the plurality of different modular fiber optic cassette configurations comprise a second modular fiber optic cassette configuration that includes four modular 3W standard width unit size cassettes that are each arranged side-by-side of each other in a row along the tray member such that a cassette side end portion of each modular 3W standard width size cassette adjacently faces a cassette side end portion of at least one other modular 3W standard width size cassette.

74. The tray of claim 73, wherein the plurality of different modular fiber optic cassette configurations comprise a third modular fiber optic cassette configuration that includes three modular 4W standard width unit size cassettes that are each arranged side-by-side of each other in a row along the tray member such that a cassette side end portion of each modular 4W standard width size cassette adjacently faces a cassette side end portion of at least one other modular 4W standard width size cassette.

75. The tray of claim 74, wherein the plurality of different modular fiber optic cassette configurations comprise a fourth modular fiber optic cassette configuration that includes two modular 6W standard width unit size

cassettes that are each arranged side-by-side of each other in a row along the tray member such that a cassette side end portion of one of the two modular 6W standard width size cassettes adjacently faces a cassette side end portion of the other modular 6W standard width size cassette.

76. The tray of claim 41, wherein the plurality of different modular fiber optic cassette configurations comprise a fifth modular fiber optic cassette configuration that includes three modular 2W standard width unit size cassettes, which are each arranged side-by-side of each other in a row along the tray member such that a cassette side end portion of one of the three modular 2W standard width size cassettes adjacently faces a cassette side end portion of one of the other modular 2W standard width size cassette, and one modular 6W standard width unit size cassette that is arranged side-by-side in a row along the tray member with one of the three modular 2W standard width unit size cassettes, such that a cassette side end portion of the one modular 6W standard width unit size cassette adjacently faces a cassette side end portion of one of the other three modular 2W standard width unit size cassettes.

77. The tray of claim 72, wherein each modular 2W standard width unit size cassette includes a first 2W cassette side end portion and a second 2W cassette side end portion configured to define a 2W standard cassette width unit that extends between the first 2W cassette side end portion and the second 2W cassette side end portion that is configured to fit the standard two width (2W) unit.

78. The tray of claim 73, wherein the modular 3W standard width unit size cassette includes a first 3W cassette side end portion and a second 3W cassette side end portion defining a 3W standard cassette width unit extending between the first 3W cassette side end portion and the second 3W

CommScope v. Belden
IPR2024-01218
CommScope Exhibit 1036

cassette side end portion that is configured to fit the standard three width (3W) unit.

79. The tray of claim 74, wherein the modular 4W standard width unit size cassette includes a first 4W cassette side end portion and a second 4W cassette side end portion defining a 4W standard cassette width unit extending between the first 4W cassette side end portion and the second 4W cassette side end portion that is configured to fit the standard four width (4W) unit.

80. The tray of claim 75, wherein the modular 6W standard width unit size cassette includes a first 6W cassette side end portion and a second 6W cassette side end portion defining a 6W standard cassette width unit extending between the first 6W cassette side end portion and the second 6W cassette side end portion that is configured to fit the standard six width (6W) unit.

81. The tray of claim 72, wherein the modular 2W standard width unit size cassette is configured to fit two receptacle modules.

82. The tray of claim 73, wherein the modular 3W standard width unit size cassette is configured to fit three receptacle modules.

83. The tray of claim 74, wherein the modular 4W standard width unit size cassette is configured to fit four receptacle modules.

84. The tray of claim 75, wherein the modular 6W standard width unit size cassette is configured to fit six receptacle modules.

CommScope v. Belden
IPR2024-01218
CommScope Exhibit 1036

85. The tray of claim 65, wherein each of the plurality of different sizes of modular fiber optic cassettes is configured to support a fiber optic receptable module that is configured to fit at least four fiber optic plug receiving receptacle portions.

86. The tray of claim 65, wherein each of the plurality of different sizes of modular fiber optic cassettes is configured to support a fiber optic receptable module that is configured to fit at least four fiber optic plug receiving receptacle portions in the standard one width (1W) unit.

87. A tray for providing a plurality of modular fiber optic cassette configurations in a fiber management system comprising:

a tray member configured to support a plurality of modular fiber optic cassettes when the plurality of modular fiber optic cassettes are arranged side-by-side along the tray member;

wherein each of the plurality of modular fiber optic cassettes comprise a modular cassette width portion that is configured to support a plurality of standard modular cassette width units;

wherein the plurality of standard modular cassette width units comprise a standard width unit (1W), two standard width units (2W), three standard width units (3W), and four standard width units (4W);

wherein the tray member is configured to support the plurality of modular fiber optic cassettes such that an outer side edge cassette portion of one modular fiber optic cassette is located directly adjacent to another outer side edge cassette portion of another modular fiber optic cassette when the plurality of modular fiber optic cassettes are arranged side-by-side along the tray member; and

wherein the tray member is configured to support a plurality of different modular fiber optic cassette configurations that comprise:

CommScope v. Belden
IPR2024-01218
CommScope Exhibit 1036

a first modular fiber optic cassette configuration that includes six modular 2W cassettes that are each arranged side-by-side of each other along the tray member such that a cassette side end portion of each cassette of the first modular fiber optic cassette configuration adjacently faces a cassette side end portion of another modular cassette of the first modular fiber optic cassette configuration;

a second modular fiber optic cassette configuration that includes four modular 3W cassettes that are each arranged side-by-side of each other along the tray member such that a cassette side end portion of each cassette of the second modular fiber optic cassette configuration adjacently faces a cassette side end portion of another modular cassette of the second modular fiber optic cassette configuration; and

a third modular fiber optic cassette configuration that includes three modular 4W cassettes that are each arranged side-by-side of each other along the tray member such that a cassette side end portion of each cassette of the third modular fiber optic cassette configuration adjacently faces a cassette side end portion of another modular cassette of the third modular fiber optic cassette configuration.

88. The tray of claim 87, wherein the tray member includes a plurality of cassette engaging tray portions that are each configured to engage a tray engaging cassette portion of each of the plurality of modular fiber optic cassettes;

89. The tray of claim 88, wherein each of the plurality of cassette engaging tray portions of the tray member are configured to be spaced apart from one another so as to conform to the plurality of standard modular cassette width units 1W, 2W, 3W, and 4W and allow the tray member to support the plurality

CommScope v. Belden
IPR2024-01218
CommScope Exhibit 1036

of modular fiber optic cassettes when the plurality of modular fiber optic cassettes are arranged side-by-side along the tray member;

90. The tray of claim 89, wherein each of the plurality of cassette engaging tray portions of the tray member are configured to be spaced apart from one another so as to conform to the standard width unit (1W).

91. The tray of claim 87, wherein the modular cassette width portion comprises a first modular cassette width portion and a second modular cassette width portion that is different from the first modular cassette width portion;

92. The tray of claim 87, wherein the plurality of standard modular cassette width units also comprise six standard width units (6W).

93. The tray of claim 87, wherein the 1W unit is based on a standard SC Duplex width unit that is configured to fit a plurality of different types of LC, SC, and MPO connectors.

94. The tray of claim 87, wherein the tray member is configured to slidingly move relative to a rack-mount tray receiving space of a rack-mount case between a tray-in position, where the tray member is located in the tray receiving space, and a tray-out position, where the tray member is located at least partially outside the tray receiving space.

95. The tray of claim 87, wherein the tray member is configured to be selectively fastened to each of the plurality of fiber optic cassettes when the plurality of modular fiber optic cassettes are arranged side-by-side along the tray member.

96. The tray of claim 87, wherein the plurality of different modular fiber optic cassette configurations also comprise:

a fourth modular fiber optic cassette configuration that includes two modular 6W cassettes that are each arranged side-by-side of each other along the tray member such that a cassette side end portion of one of the two modular 6W standard width size cassettes adjacently faces a cassette side end portion of the other modular 6W standard width size cassette;

a fifth modular fiber optic cassette configuration that includes one modular 2W cassette, two modular 3W cassettes and one modular 4W cassette that are each arranged side-by-side of each other along the tray member such that a cassette side end portion of each cassette of the fifth modular fiber optic cassette configuration adjacently faces a cassette side end portion of another modular cassette of the fifth modular fiber optic cassette configuration; and

a sixth modular fiber optic cassette configuration that includes two modular 2W cassettes and two modular 4W cassettes that are each arranged side-by-side of each other along the tray member such that a cassette side end portion of each cassette of the sixth modular fiber optic cassette configuration adjacently faces a cassette side end portion of another modular cassette of the sixth modular fiber optic cassette configuration.

97. The tray of claim 87, wherein each of the plurality of modular fiber optic cassettes includes a cassette side end portion that is configured to be located directly adjacent to a cassette side end portion of another module fiber optic cassette when the plurality of modular fiber optic cassettes are arranged side-by-side along the tray member.

98. The tray of claim 87, wherein each of the plurality of modular fiber optic cassettes includes a cassette side end portion that is configured to be located adjacent to a cassette side end portion of another module fiber optic cassette

when the plurality of modular fiber optic cassettes are arranged side-by-side along the tray member.

99. The tray of claim 87, wherein each of the plurality of modular fiber optic cassettes includes a cassette side end portion that is configured to touch a cassette side end portion of another module fiber optic cassette when the plurality of modular fiber optic cassettes are arranged side-by-side along the tray member.

100. The tray of claim 87, wherein the tray member has a first tray end portion and a second tray end portion that is configured to be spaced away from the first tray end portion so as to define a tray width portion that extends between the first tray end portion and the second tray end portion.

101. The tray of claim 100, wherein the trade width portion is configured to support the plurality of modular fiber optic cassettes when the plurality of modular fiber optic cassettes are arranged side-by-side along the tray member.

102. The tray of claim 100, wherein tray member is configured such that the plurality of modular fiber optic cassettes fit in the tray width portion when the plurality of modular fiber optic cassettes are arranged side-by-side along the tray member.

103. The tray of claim 100, wherein the tray width portion of the tray member is configured to support at least twelve standard one width (1W) units when the plurality of modular fiber optic cassettes are arranged side-by-side along the tray width portion of the tray member.

104. The tray of claim 87, wherein the tray member is configured to allow a front cassette portion of each of the plurality of modular fiber optic cassette to be

accessed when the plurality of modular fiber optic cassettes are arranged side-by-side along the tray member and when the tray member is in the tray-in position.

105. The tray of claim 87, wherein the tray member is configured to allow a rear cassette portion of each of the plurality of modular fiber optic cassette to be accessed when the plurality of modular fiber optic cassettes are arranged side-by-side along the tray member and when the tray member is in the tray-in position.

106. The tray of claim 87, wherein the tray member includes a cassette engaging shoulder that is configured to fit a channel portion of each of the plurality of modular fiber optic cassettes.

107. The tray of claim 106, wherein the cassette engaging shoulder is located adjacent to a front end portion of the tray member such that the tray member is configured to support one of the plurality of modular fiber optic cassettes at a front location of the tray member.

108. The tray of claim 87, wherein the tray member is configured to be mounted in a rack.

109. The tray of claim 87, wherein the tray member is configured to be mounted in a standard U-space rack.

110. The tray of claim 87, wherein the tray member comprises a cassette fastening tray portion that is configured to removably secure the tray member to one of the plurality of modular fiber optic cassettes.

CommScope v. Belden
IPR2024-01218
CommScope Exhibit 1036

111. The tray of claim 110, wherein the cassette fastening tray portion comprises a magnet.

112. The tray of claim 87, wherein the tray member is configured to be removably secured to an elongate cable management bracket that includes a cable management loop that is configured to be positioned in front of and to a side of an optic plug receiving receptacle portion of a modular cassette when the cable management loop is removably secured to the tray member.

113. The tray of claim 87, wherein the tray member is configured to support the plurality of different modular fiber optic cassette configurations in a standard U-space.

114. The tray of claim 87, wherein each of the plurality of different modular fiber optic cassette configurations include a plurality of different sizes of modular fiber optic cassettes.

115. The tray of claim 114, wherein the plurality of different sizes of modular fiber optic cassettes include a 2W cassette size that is configured to fit a standard two width (2W) unit relative to the standard one width (1W) unit.

116. The tray of claim 114, wherein the plurality of different sizes of modular fiber optic cassettes include a 3W cassette size that is configured to fit a standard three width (3W) unit relative to the standard one width (1W) unit.

117. The tray of claim 114, wherein the plurality of different sizes of modular fiber optic cassettes include a 4W cassette size that is configured to fit a standard four width (4W) unit relative to the standard one width (1W) unit.

118. The tray of claim 114, wherein the plurality of different sizes of modular fiber optic cassettes include a 6W cassette size that is configured to fit a standard six width (6W) unit relative to the standard one width (1W) unit.

119. The tray of claim 114, wherein each of the plurality of different sizes of modular fiber optic cassettes is configured to support a fiber optic receptable module that is configured to fit in the standard one width (1W) unit.

120. The tray of claim 119, wherein the fiber optic receptable module includes a first module side end portion and a second module side end portion defining a module width portion extending between the first try end portion and second tray end portion, and the module width portion is configured to fit in the standard one width (1W) unit.

121. The tray of claim 87, wherein the plurality of different modular fiber optic cassette configurations comprise a first modular fiber optic cassette configuration that includes six modular 2W standard width unit size cassettes that are each arranged side-by-side of each other along the tray member such that a cassette side end portion of each modular 2W standard width unit size cassette adjacently faces a cassette side end portion of at least one other modular 2W standard width size cassette.

122. The tray of claim 121, wherein the plurality of different modular fiber optic cassette configurations comprise a second modular fiber optic cassette configuration that includes four modular 3W standard width unit size cassettes that are each arranged side-by-side of each other in a row along the tray member such that a cassette side end portion of each modular 3W standard width size cassette adjacently faces a cassette side end portion of at least one other modular 3W standard width size cassette.

123. The tray of claim 122, wherein the plurality of different modular fiber optic cassette configurations comprise a third modular fiber optic cassette configuration that includes three modular 4W standard width unit size cassettes that are each arranged side-by-side of each other in a row along the tray member such that a cassette side end portion of each modular 4W standard width size cassette adjacently faces a cassette side end portion of at least one other modular 4W standard width size cassette.

124. The tray of claim 123, wherein the plurality of different modular fiber optic cassette configurations comprise a fourth modular fiber optic cassette configuration that includes two modular 6W standard width unit size cassettes that are each arranged side-by-side of each other in a row along the tray member such that a cassette side end portion of one of the two modular 6W standard width size cassettes adjacently faces a cassette side end portion of the other modular 6W standard width size cassette.

125. The tray of claim 87, wherein the plurality of different modular fiber optic cassette configurations comprise a fourth modular fiber optic cassette configuration that includes three modular 2W standard width unit size cassettes, which are each arranged side-by-side of each other in a row along the tray member such that a cassette side end portion of one of the three modular 2W standard width size cassettes adjacently faces a cassette side end portion of one of the other modular 2W standard width size cassette, and one modular 6W standard width unit size cassette that is arranged side-by-side in a row along the tray member with one of the three modular 2W standard width unit size cassettes, such that a cassette side end portion of the one modular 6W standard width unit size cassette adjacently faces a cassette side end portion of one of the other three modular 2W standard width unit size cassettes.

CommScope v. Belden
IPR2024-01218
CommScope Exhibit 1036

126. The tray of claim 87, wherein each modular 2W standard width unit size cassette includes a first 2W cassette side end portion and a second 2W cassette side end portion configured to define a 2W standard cassette width unit that extends between the first 2W cassette side end portion and the second 2W cassette side end portion that is configured to fit the standard two width (2W) unit.

127. The tray of claim 87, wherein the modular 3W standard width unit size cassette includes a first 3W cassette side end portion and a second 3W cassette side end portion defining a 3W standard cassette width unit extending between the first 3W cassette side end portion and the second 3W cassette side end portion that is configured to fit the standard three width (3W) unit.

128. The tray of claim 87, wherein the modular 4W standard width unit size cassette includes a first 4W cassette side end portion and a second 4W cassette side end portion defining a 4W standard cassette width unit extending between the first 4W cassette side end portion and the second 4W cassette side end portion that is configured to fit the standard four width (4W) unit.

129. The tray of claim 96, wherein the modular 6W standard width unit size cassette includes a first 6W cassette side end portion and a second 6W cassette side end portion defining a 6W standard cassette width unit extending between the first 6W cassette side end portion and the second 6W cassette side end portion that is configured to fit the standard six width (6W) unit.

130. The tray of claim 87, wherein the modular 2W standard width unit size cassette is configured to support two receptacle modules.

CommScope v. Belden
IPR2024-01218
CommScope Exhibit 1036

131. The tray of claim 87, wherein the modular 3W standard width unit size cassette is configured to support three receptacle modules.

132. The tray of claim 87, wherein the modular 4W standard width unit size cassette is configured to support four receptacle modules.

133. The tray of claim 96, wherein the modular 6W standard width unit size cassette is configured to support six receptacle modules.

134. The tray of claim 114, wherein each of the plurality of different sizes of modular fiber optic cassettes is configured to support a fiber optic receptable module that is configured to support at least four fiber optic plug receiving receptacle portions.

135. The tray of claim 114, wherein each of the plurality of different sizes of modular fiber optic cassettes is configured to support a fiber optic receptable module that is configured to support at least four fiber optic plug receiving receptacle portions in the standard one width (1W) unit.

CommScope v. Belden
IPR2024-01218
CommScope Exhibit 1036