Filed May 21, 2025

UNITED STATES PATENT AND TRADEMARK OFFICE

_____

BEFORE THE PATENT TRIAL AND APPEAL BOARD

_____

COMMSCOPE TECHNOLOGIES LLC,
Petitioner,

v.

BELDEN CANADA ULC,
Patent Owner.

_____

Case No. IPR2024-01218
Patent 10,795,107 B2

_____

**DECLARATION OF DR. CHARLES A. ELDERING IN SUPPORT OF PATENT OWNER' MOTION TO AMEND**

CommScope v. Belden
IPR2024-01218
**Belden Ex. 2001**

## Table of Contents

I. Introduction.....1

II. Qualifications and Background.....2

III. Materials Considered.....3

IV. Level of Ordinary Skill in the Art.....3

V. The Provisional Application And The ’831 Patent Application Support The Substitute Claims.....5

## I. INTRODUCTION

1. I, Dr. Charles A. Eldering, submit this declaration to state my opinions on the matters described below.

2. I have been retained on behalf of Patent Owner, Belden Canada ULC ("Belden"), as an independent expert for the above-identified *inter partes review* ("IPR") proceeding involving U.S. Patent 10,795,107 B2 ("'107 Patent").

3. Petitioner, CommScope Technologies LLC ("CommScope"), filed a Petition (Paper 1) challenging claims 1-5 and 8-13 (the "Challenged Claims") of the '107 Patent. The Patent Trial and Appeal Board instituted review (Paper 9) of the Challenged Claims. In its Motion to Amend, Belden requests that the Board cancel the Challenged Claims and issue substitute claims 16-18 ("Substitute Claims").

4. I have been asked by Belden to analyze and set forth my opinions on whether the Substitute Claims (attached as Appendix A) are supported by the disclosures of the patent applications from which the '107 Patent issued. This Declaration sets forth my opinions and the bases, reasons, and evidence relied upon in forming those opinions.

5. Although I am being compensated at a rate of $475 per hour and reimbursed for reasonable out-of-pocket expenses, no part of my compensation depends on the outcome of these proceedings, and I have no other interest in these

proceedings.

## II. QUALIFICATIONS AND BACKGROUND

6. I believe that I am well qualified to serve as a technical expert in this matter based upon my educational and work experience.

7. I have extensive experience in the telecommunications industries, having worked for Alcatel in the development of Fiber to the Curb (FTTC) products and subsequently at General Instrument Corporation and Next Level Communications, where I worked on Hybrid Fiber Coax (HFC) and FTTC systems. During this timeframe I was involved in the interfaces between FTTC equipment and the transport network including the use of Add-Drop Multiplexors (ADM), which contained insertable cassettes which created interfaces from optical transport systems such as a Synchronous Optical Network (SONET) to other optical or electrical formats.

8. Subsequent to my employment in the telecommunications industry and through my company, Technology, Patents, and Licensing, Inc., I gained further experience in the area of fiber optic communications and in particular interchangeable modules in SONET add-drop multiplexors. In this work, I developed a patent portfolio for Cerent Corporation regarding their Cerent 454 ADM which was based on a pioneering "any card, any slot" concept. Cerent Corporation

was purchased by Cisco Systems in 1999 for $7.2 billion and became the foundation of Cisco's Optical Transport Business Unit.

9. A copy of my curriculum vitae is attached to this declaration as Appendix B. Of particular relevance to my role in this case is that (a) I am registered patent agent at the United States Patent and Trademark Office and have prosecuted many patents (including my own); and (b) I have been qualified to testify as an expert witness in numerous contested legal proceedings.

## III. MATERIALS CONSIDERED

10. In preparing this Declaration, I reviewed, among other materials, the materials discussed in this Declaration. My opinions are also based on my education, training, research, knowledge, and my professional experience and expertise.

11. I have considered the following Exhibits provided to me by Belden's counsel ("counsel"):

| EXHIBIT | DESCRIPTION |
|---|---|
| 1001 | U.S. Patent No. 10,795,107 B2 ("the '107 Patent") |
| | |
| 2002 | U.S. Provisional Patent Application No. 62/567,339 ("the Provisional Application") |
| 2003 | U.S. Patent Application No. 16/143,831 ("the '831 Application") |

## IV. LEVEL OF ORDINARY SKILL IN THE ART

12. I have been informed by counsel and understand that factors that may

be considered in determining the level of ordinary skill in the art include: (1) the educational level of the inventor; (2) the type of problems encountered in the art; (3) prior art solutions to these problems; (4) the rapidity with which innovations are made; (5) the sophistication of the technology; and (6) educational level of active workers in the field. A person of ordinary skill in the art is also a person of ordinary creativity.

13. I understand that I must evaluate the question of whether the Substitute Claims are supported by the disclosures of the patent applications from which the '107 Patent issued from the perspective of a person of ordinary skill in the art at the time of the invention (2017) ("POSITA").

14. In my view, a POSITA would have had at least a B.S. degree or equivalent in mechanical or electrical engineering or similar fields, in addition to a minimum of two years of professional experience with design, development, and/or utilization of communication products, including optical communication systems. I note that these qualifications of a POSITA are nearly identical to the qualifications proposed by Petitioner and adopted by the Board in the Institution Decision. Paper 9 at 10-11.

15. Under that definition, I consider myself to be at least POSITA with respect to the '107 Patent, and I was at least a POSITA in 2017. My opinions in this

Declaration are based on the perspective of a POSITA in the 2017 timeframe. This is true even if the testimony is stated in the present tense.

## V. THE PROVISIONAL APPLICATION AND THE '831 PATENT APPLICATION SUPPORT THE SUBSTITUTE CLAIMS.

16. The '107 Patent issued from a non-provisional application (U.S. Patent Application No. 16/143,831) ("the '831 Application") (Ex. 2003), filed September 27, 2018. The '831 Application claims priority to a provisional patent application (U.S. Provisional Patent Application No. 62/567,339) ("the Provisional Application") (Ex. 2002), filed October 3, 2017, which is the earliest claimed priority date.

17. In the chart below, I cite support for the Substitute Claims from both the Provisional Application (Ex. 2002) and the '831 Application (Ex. 2003). I have provided exemplary citations to the portions of these applications that provide written description support for the Substitute Claims. The cited support is provided for all limitations in the Substitute Claims (*i.e.*, the limitations added by amendment and the originally issued claims).

| Claim/ Element[1] | Limitations Added By Amendment | Support In Provisional Application (Ex. 2002) | Support In '831 Application (Ex. 2003) |
|---|---|---|---|
| 16pre | - | *See*, *e.g.*, Title, ¶¶ [0001], [0003], [0011], [0016], [0018]-[0020],Claim 1, FIGS. 1-5C. | *See*, *e.g.*, Title, Abstract, ¶¶ [0001], [0003], [0013], [0018], [0020]-[0022], Claim 1, FIGS. 1-5C. |
| 16A | - | *See*, *e.g.*, ¶¶ [0002]-[0003], [0011], Claim 1, FIGS. 1, 3, 5A-5C. | *See*, *e.g.*, Abstract, ¶¶ [0002]-[0003], [0013], Claim 1, FIGS. 1, 3, 5A-5C. |
| 16B | <u>wherein said tray has a width dimensioned to receive at least twelve standard width units side by side and is configured to be mounted in a 19-inch rack</u> | *See*, *e.g.*, ¶¶ [0003], [0011], [0014], [0017], Claim 1, FIGS. 1, 3-5C. | *See*, *e.g.*, Abstract, ¶¶ [0003], [0013], [0016], [0019], Claims 1, 2, FIGS. 1, 3-5C. |
| 16C | - | *See*, *e.g.*, ¶¶ [0001], [0003], [0012], [0014], [0017]-[0020], Claim 1, FIGS. 1-3, 5A-5C. | *See*, *e.g.*, Abstract, ¶¶ [0001], [0003], [0014], [0016], [0019]-[0022], Claim 1, FIGS. 1-3, 5A-5C. |

[1] Claim element designations for substitute independent claim 16 are identified in the claim listing in Appendix A and are based on the designations used in the Petition for the original claims. Paper 1 (Pet.) at 144-145.

| Claim/ Element[1] | Limitations Added By Amendment | Support In Provisional Application (Ex. 2002) | Support In '831 Application (Ex. 2003) |
|---|---|---|---|
| 16D | - | *See*, *e.g.*, ¶¶ [0003], [0012], Claim 1, FIGS. 1-2B. | *See*, *e.g.*, Abstract, ¶¶ [0003], [0014], Claim 1, FIGS. 1-2B. |
| 16D1 | a tab portion configured to extend from a rear portion of each of the cassettes and above the tray and to allow each of the cassettes to be released from said tray | *See*, *e.g.*, ¶ [0012], FIGS. 1-2B. | *See*, *e.g.*, ¶ [0014], FIGS. 1-2B. |
| 16D2 | wherein each of said cassettes consists of only four fiber optic plug receiving receptacles for each standard width unit arranged side by side in a row along a front thereof | *See*, *e.g.*, ¶¶ [0003], [0013]-[0014], Claim 1, FIGS. 1-4D. | *See*, *e.g.*, ¶¶ [0015]-[0016], Claim 4, FIGS. 1-4D |
| 16E | - | *See*, *e.g.*, ¶¶ [0003], [0012], [0014], Claim 1, FIGS. 1, 3-5C. | *See*, *e.g.*, Abstract, ¶¶ [0003], [0014], [0016], Claims 1, 2, 4, FIGS. 1, 3-5C. |
| 17 | - | *See*, *e.g.*, ¶ [0013], FIGS. 1, 2A-2B. | *See*, *e.g.*, ¶¶ [0005], [0015], Claim 3, FIGS. 1, 2A-2B. |
| 18 | - | *See*, *e.g.*, ¶¶ [0003], [0011], Claim 1, FIG. 1. | *See*, *e.g.*, ¶ [0013], Claim 5, FIG. 1. |

18. Based on the disclosures of the Provisional Application and the '831

Application, it is my opinion that the inventors possessed the subject matter of the Substitute Claims, including the limitations added by amendment, as of the filing dates of those applications.

19. The claim amendment requiring that each of the cassettes consists of only four fiber optic plug receiving receptacles for each standard width unit arranged side by side in a row along a front thereof (claim element 16D2) is disclosed in at least paragraph [0003] ("each of the cassettes comprising four fiber optic plug receiving receptacles arranged side by side in a row along a front thereof for each standard width unit") and FIG. 1 of the Provisional Application shown below (Ex. 2002) (four receptacles 54 per receiving module 52).

| **Provisional Application (Ex. 2002) FIG. 1<br>Four Receptacles 54 For Each Standard Width Unit** |
| --- |
| 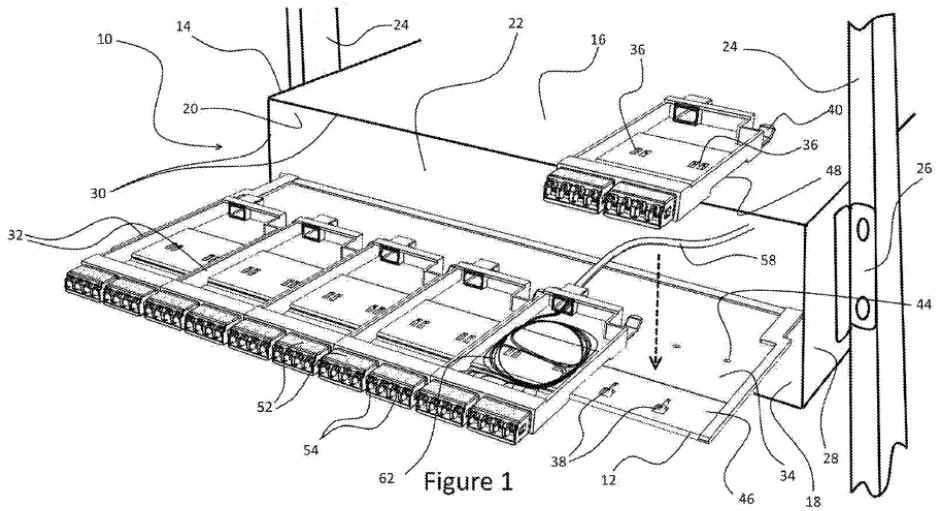 |

20. The claim amendment requiring a tab portion extending from a rear portion of each cassette and above the tray for releasing cassettes (claim element 16D1) is disclosed in at least paragraph [0012] ("A flexible tab 40 is also provided which comprises a boss 42 that engages a respective aperture 44 machined or otherwise formed in the tray 12 when the tabs 36 are engaged within their respective slots 38, thereby releasably securing the cassette 32 to the tray 12.") and FIGS. 2A and 2B of the Provisional Application (Ex. 2002) shown below (tab 40).

| **Provisional Application (Ex. 2002) FIGS. 2A And 2B<br>Tab 40 Extending From Rear Portion Of Cassette 32** |
| --- |
| 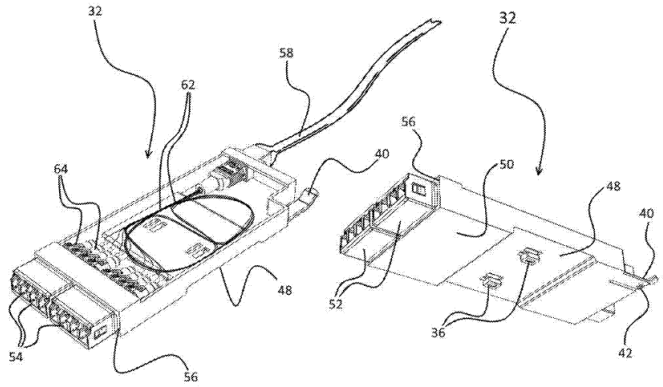 <br>Figure 2A Figure 2B |

21. The claim amendment requiring a tray width dimensioned to receive at least twelve standard width units side by side and to be mounted in a 19-inch rack (claim element 16B) is disclosed in at least paragraph [0011] ("In a particular

illustrated embodiment the system 10 is shown for mounting in a 19" rack ….”), paragraph [0014] (“The 2W, 3W, 4W and 6W cassettes 32 are typically used only with like cassettes 32 as illustrated and such that respectively six (6), four (4), three (3) and two (2) cassettes fit snuggly side by side on the 12W tray ….”), and FIG. 3 of the Provisional Application (Ex. 2002) shown below (“12W”).

**Provisional Application (Ex. 2002) FIG. 3**
**12 Standard Width Units (12W) Mounted In 19" Rack**

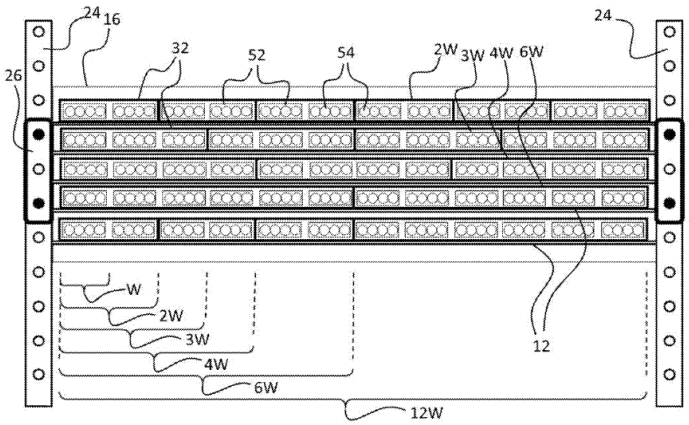


Figure 3

22. It is also my opinion that a POSITA would understand that the written descriptions of the Provisional Application and the ’831 Application are sufficient to inform a POSITA how to make and use the inventions recited in the Substitute Claims the without undue experimentation as of the filing dates of those applications. I understand that the factors to consider when determining whether a disclosure would require undue experimentation include: (1) the quantity of

experimentation necessary; (2) the amount of direction or guidance presented; (3) the presence or absence of working examples; (4) the nature of the invention; (5) the state of the prior art; (6) the relative skill of those in the art; (7) the predictability or unpredictability of the art; and (8) the breadth of the claims. Given the table of exemplary citations provided above for the limitations found in the Substitute Claims, it is my opinion that a POSITA would have enough information to make and use the full scope of the proposed Substitute Claims without undue experimentation.

23. In signing this declaration, I understand that the declaration will be filed as evidence in a contested case before the Patent Trial and Appeal Board of the United States Patent and Trademark Office. I acknowledge that I may be subject to cross-examination in this case and that cross-examination will take place within the United States. If cross-examination is required of me, I will appear for cross-examination within the United States during the time allotted for cross-examination.

24. I declare that all statements made herein of my own knowledge are true and that all statements made on information and belief are believed to be true; and further that these statements were made with the knowledge that willful false statements and the like so made are punishable by fine or imprisonment, or both, under Section 1001 of Title 18 of the United States Code.

Dated: May 21, 2025 By: _____

Charles A. Eldering, Ph.D.

# APPENDIX

# A

**APPENDIX A**

CLAIM LISTING – ’107 PATENT

1.-5. (Cancelled)

8.-13. (Cancelled)

16. (substitute for original claim 1) *[16pre]*[1] A modular fiber optic cassette system, the system comprising:

*[16A]* a case comprising a top and a bottom wall and two opposed side walls, each of said sidewalls attached between respective side edges of said top and bottom wall, said walls together defining a tray receiving space there between and a forward edge of each said wall together defining an opening to said tray receiving space;

*[16B]* at least one tray slideably received within said tray receiving space for movement between a stored position wherein said tray is completely inside said tray receiving space and an accessible position wherein a front end of said tray is in front of said opening and outside of said tray receiving space<u>, wherein said tray has a width dimensioned to receive</u>

[1] Bracketed designations of independent claim elements are based on the designations used in the Petition for the original claims. Paper 1 (Pet.) at 144-145.

at least twelve standard width units side by side and is configured to be mounted in a 19-inch rack;

*[16C]* a set of fiber optic cassettes, a selected plurality of the cassettes arrangeable side by side along said tray front end wherein each of said cassettes comprises a plurality of fiber optic plug receiving receptacles arranged side by side in a row along a front thereof, a first of said set of cassettes comprising a first cassette width of one of one, two, three, four and six standard width units and a second of said cassettes comprising a second cassette width different from said first cassette width and one of one, two, three, four and six standard width units; [and]

*[16D]* a fastener for removeably securing each of said cassettes to said tray;

*[16D1]* a tab portion configured to extend from a rear portion of each of the cassettes and above the tray and to allow each of the cassettes to be released from said tray;

*[16D2]* wherein each of said cassettes consists of only four fiber optic plug receiving receptacles for each standard width unit arranged side by side in a row along a front thereof; and

*[16E]* wherein when arranged on said at least one tray each of said fiber optic cassettes touches at least one other fiber optic cassette.

17. (substitute for original claim 3) The modular fiber optic cassette system of claim [1] 16, wherein each of said cassettes comprises a multi fiber connector receiving receptacle arranged on a rear thereof and a plurality of optic fibers, one of said optic fibers interconnecting a respective one of said fiber optic plug receiving receptacles with said multi fiber connector receiving receptacle.

18. (substitute for original claim 5) The modular fiber optic cassette system of claim [1] 16, wherein said system is for mounting in a rack and further comprising a pair of mounting brackets, one of said brackets attached to each of said sidewalls on either side of an outside of said case, said mounting brackets for securing said case to the rack.

# APPENDIX B

***Curriculum Vitae***
Dr. Charles A. Eldering

CAsE Analysis, Inc.
620 Wilson Ave, PMB 101 215.913.7214
Brooklyn, NY 11207 cae@caseanalysisgroup.com

**AREAS OF SPECIALIZATION:** Extensive technical and market expertise in the areas of telecommunications, microelectronics, consumer electronics, targeted advertising, location-based services, data mining, and bioinformatics, with over 30 years of industrial experience. Highly skilled in the management and utilization of patents including infringement analysis and documentation of use of claimed technology.

**EDUCATION:**

1989 University of California; Davis, California
Ph.D. Electrical Engineering

1985 Syracuse University; Syracuse, New York
M.S. Solid State Science and Technology

1981 Carnegie Mellon University; Pittsburgh, Pennsylvania
B.S. Physics

**OTHER QUALIFICATIONS:**

Registered U.S. Patent Agent. Registration No. 39,180
FCC Licensed General Class Amateur Radio Operator, N3YRB

**EMPLOYMENT HISTORY:**

December 2013 to present:
*CAsE Analysis, Inc.*
Founder & President

September 2022 to present
*SitNet LLC*
Founder and Managing Member

May 2000 to December 2021
*Expanse Networks/Expanse Bioinformatics*
Founder and President

December 1997 to December 2013:
*Technology, Patents & Licensing, Inc. (now TechPats)*
Founder and President

October 1995 to November 1997:
*Next Level Communications, Rohnert Park, CA*
Director, Advanced Systems Engineering

September 1993 to September 1995:
*General Instrument Corporation, Hatboro, PA*
Manager, Fiber-to-the-Curb/Switched Digital Video Systems; March 1995 to September 1995
Manager, Broadband Systems Engineering; January 1994 to March 1995
Senior Project Engineer, Systems Engineering; September 1993 to December 1993

January 1990 to August 1993:
*Alcatel, Madrid, Spain*
Senior Engineer/Manager, Fiber in the Loop R&D; October 1990 to August 1993
Consultant; January 1990 to September 1990

June 1986 to August 1990:
*University of California, Davis, CA*
Researcher, Department of Electrical and Computer Engineering

October 1981 to May 1986:
*United States Air Force, Rome Laboratory, Rome, NY*
Officer

**EXPERT WITNESSING** (party represented in bold, cases that proceeded to trial and trial type noted)**:**

1. *CommScope Technologies LLC v.* ***Belden Inc., Opterna AM, Inc. and PPC Broadband, Inc.***, District of Delaware (Case No. 1:24-cv-00411-RGA).

2. *CommScope Technologies LLC v.* ***Belden Inc., and PPC Broadband, Inc.***, District of Delaware (Case No. 1:24-cv-00427-RGA).

3. *CommScope Technologies LLC v.* ***Belden Inc., Opterna AM, Inc. and PPC Broadband, Inc.***, District of Delaware, (Case No. 1:24-cv-00440-RGA).

4. ***BizLink Technology, Inc.*** *v. Anderson Power Products, Inc.,* PTAB (Case No. IPR2024-00687).

5. ***PPC Broadband, Inc.*** *v. Amphenol Corporation,* PTAB (Case No. *2023-01363*).

6. *CommScope Technologies LLC v.* **Belden Inc.**, PTAB (Case Nos. IPR2023-01056, -01058, -01061, -01062).

7. ***PPC Broadband Inc.*** *v. Perfect Vision Manufacturing, Inc.,* Eastern District of Arkansas (Case No. 4:22-cv-204).

8. ***PPC Broadband Inc.*** *v. Perfect Vision Manufacturing, Inc.,* Eastern District of Arkansas (Case No. 4:22-cv-163).

9. ***PPC Broadband Inc.*** *v. CommScope Technologies, LLC,* District of Delaware (Case No. 1:22-cv-00783-RGA).

10. ***PPC Broadband Inc.*** *v. Charles Industries, LLC and Amphenol Corporation,* District of Delaware (Case No. 1:22-cv-01517).

11. ***Belden Inc.*** *v. CommScope Technologies LLC,* District of Delaware (Case No. 1:22-cv-00782-RGA).

12. *Amphenol Corporation v.* ***PPC Broadband, Inc.***, PTAB, (Case Nos. IPR2022-00718, -00719, -00720 and -00721).

13. ***PPC Broadband, Inc.*** *v. Amphenol Corporation,* PTAB (Case Nos. IPR2022, -00830, -00831, -00946, -00947, -01087, -01088).

14. ***Sony Corporation and Sony Electronics Inc.*** *v. ARRIS International plc, ARRIS Group, Inc., ARRIS Technology, Inc., ARRIS Enterprises LLC, ARRIS Solutions, Inc, and ARRiS Global Ltd. (formerly Pace Ltd.), In the Matter of Certain Digital Cable and Satellite Products, Set-Top Boxes, Gateways, and Components Thereof,* United States International Trade Commission, Washington, D.C. (Investigation No. 337-TA-1049).

15. ***Unified Patents Inc.*** *v. Harry Heslop & Sportbrain Holdings, LLC,* PTAB (Case No. IPR2016-01464).

16. ***Unified Patents Inc.*** *v. Hybrid Audio, LLC,* PTAB (Case No. IPR2016-01265).

17. ***Unified Patents Inc.*** *v. Qurio Holdings, Inc.,* PTAB (Case No. IPR2015-01991).

18. ***Unified Patents Inc.*** *v. Rothschild Connected Devices Innovations, LLC*, PTAB (Case No. IPR2016-00535).

19. ***Unified Patents Inc.*** *v. FO2GO LLC,* PTAB (Case No. IPR2016-00454).

20. ***Unified Patents Inc.*** *v. Nonend Inventions,* NV, PTAB (Case No. IPR2016-00174).

21. ***Unified Patents Inc.*** *v. iMTX Strategic, LLC*, PTAB (Case No. IPR2015-01061).

22. ***Unified Patents Inc.*** *v. TransVideo Electronics, Ltd.,* PTAB (Case No. IPR2015-01519).

23. ***PPC Broadband, Inc. d/b/a PPC*** *v. Times Fiber Communications, Inc.*, Northern District of New York (Case No, 5:13-cv-460-TJM-DEP).

24. ***PPC Broadband, Inc. d/b/a PPC*** *v. Corning Gilbert, Inc.,* Northern District of New York (Case No. 5:13-cv-00538-GLS-DEP).

25. ***PPC Broadband, Inc.*** *v. Corning Optical Communications RF, LLC*, *In the Matter of Certain Coaxial Cable Connectors and Components Thereof and Products Containing Same*, United States International Trade Commission, DC (Investigation No. 337-TA-938).

26. ***BroadSoft, Inc.*** *v. CallWave Communications, LLC,* District of Delaware (Case No. DED-1-13-cv-00711-RGA).

27. *Netflix, Inc., v.* ***OpenTV, Inc.***, PTAB (Case No. IPR2014-00252).

28. ***Mediatube Corp and Northvu Inc.*** *v. Bell Canada and Bell Aliant Regional Communications, Limited Partnership,* Canadian Federal Court (C.A. T-705-13, bench trial held).

29. ***John Mezzalingua Associates, Inc. d/b/a PPC*** *v. Corning Gilbert Inc.*, District of Arizona (Case No. 2: 12-cv-12-02208-SMM).

30. *Corning Gilbert Inc., v.* ***PPC Broadband, Inc.***, PTAB (Case No. IPR2013-00345).

31. *Corning Gilbert Inc., v.* ***PPC Broadband, Inc.***, PTAB (Case No. IPR2013-00340).

32. *Corning Gilbert Inc., v.* ***PPC Broadband, Inc.***, PTAB (Case No. IPR2013-00342).

33. *Corning Gilbert Inc., v.* ***PPC Broadband, Inc.***, PTAB (Case No. IPR2013-00346).

34. *Corning Gilbert Inc., v.* ***PPC Broadband, Inc.***, PTAB (Case No. IPR2013-00347).

35. ***PPC Broadband, Inc.*** *v. Corning Gilbert Inc.,* Northern District of New York (Case No. 5:13-cv-1310).

36. ***PPC Broadband, Inc. d/b/a PPC*** *v. Corning Gilbert, Inc.,* Northern District of New York (Civil Action No. 11-cv-00761-GLS-DEP, jury trial held).

37. *Corning Gilbert, Inc. v.* ***The United States of America, et al.***, United States Court of International Trade (Case No. 11-00511).

38. ***Parus Holdings, Inc.*** *v National Airtran Airways, Inc., Airtran Holdings, Inc., Airtran Holdings, LLC* Middle District of Florida, Tampa Division (Case No. 8:11-cv-01685-EAK-TBM).

39. ***John Mezzalingua Associates, Inc. d/b/a PPC*** *v. International Communications Manufacturing Corporation, Randall A. Holliday, and Belden Inc.*, Western District of Wisconsin (Case No. 3:11-cv-00424-bbc).

40. ***eTool Development, Inc., and eTool Patent Holdings Corp.*** *v National Semiconductor Corporation* in the Eastern District of Texas, Marshall Division (Case No. 2:08-cv-196).

41. ***John Mezzalingua Associates, Inc. d/b/a PPC, Inc.*** *v. PCT International, Inc.,* Western District of Texas, San Antonio Division (Case No. 5:09-cv-00410-RF).

42. ***John Mezzalingua Associates, Inc. d/b/a PPC, Inc.*** *v. PACE Electronics, Inc. (d/b/a PACE International) and Perfect 10 Antenna* Company, Western District of Minnesota (Case No. 0:10-cv-00064 MJD/JJG).

43. ***John Mezzalingua Associates, Inc. d/b/a PPC, Inc.****, v. Hanjiang Fei Yu Electronics Equipment Factory, Zhongguang Electronics, Yangzhou Zhongguang Electronics Co., Ltd., and Yangzhou Zhongguang Foreign Trade Co., Ltd.* in Certain Coaxial Cable Connectors and Components Thereof and Products Containing Same, United States International Trade Commission, Washington, D.C. (Investigation No. 377-TA-650, proceeded to trial at the ITC).

44. *Arrow Communication Laboratories, Inc. v.* ***John Mezzalingua Associates, Inc.***, Northern District of New York (Civil Action No. 05-CV-1456 (NAM/DEP) (Lead Case); 05-CV-0703 (NAM/DEP) (Member Case).

45. *Agrizap Inc. v.* ***Woodstream Corporation***, Eastern District of Pennsylvania (Case No. 04-CV-03925-RK, jury trial held).

46. ***John Mezzalingua Associates, Inc. d/b/a PPC, Inc.*** *v. Corning Gilbert, Inc.* Western District of Wisconsin (Case No. 03-C-0354-S, jury trial held).

47. ***John Mezzalingua Associates, Inc. d/b/a PPC, Inc.*** *v. Arris International, Inc.*, Western District of Wisconsin (Case No. 03-C-0353-C, jury trial held).

48. *Arris International, Inc., and Randall A. Holliday, v.* ***John Mezzalingua Associates, Inc. d/b/a PPC***, District of Colorado, Denver Division (Case No. CA 01-WM-2061).

**REVIEWED PUBLICATIONS:**

1. Eric E. Bensen, Charles A. Eldering, Jim Longacre, Anthony W. Shaw, Daniel H. Sherr, Matthew W. Stavish, and John M. White, "Patent Commentaries Analyzing the America Invents Act," *Lexis Nexis,* 2011.
2. Malcolm T. "Ty" Meeks and Charles A. Eldering, PhD, "Patent Valuation: Aren't We Forgetting Something? Making the Case for Claims Analysis in Patent Valuation by Proposing a Patent Valuation Method and a Patent-Specific Discount Rate Using the CAPM", *Northwestern Journal of Technology and Intellectual Property*, (Fall, 2010) Vol. 9, No. 3.
3. C.A. Eldering, "Technology and Competition: A Five-Year Outlook for the Telecommunications Marketplace," in Communications Deregulation and FCC Reform, J.A. Eisenach and R.J. May, eds. (Kluwer Academic Publishers, 2001).
4. S.C. Durant, E.J. Basinski, K.L. Cerrone, C.A. Eldering and M. Ishimaru, "Patent Portfolio Development," in *Electronic Software Patents: Law and Practice*, S.W. Lundberg and S.C. Durant, eds. (BNA Books, 2000).
5. C.A. Eldering, "Patents and Telecommunications", Guest Editorial in *IEEE Communications Magazine*, vol. 38, no. 7, p. 96 (July 2000).
6. C.A. Eldering, M.L. Sylla, J.A. Eisenach, "Is There a Moore's Law for Bandwidth?," in *IEEE Communications Magazine*, vol. 37, no. 10, pp. 117-121 (October 1999).
7. C.A. Eldering, "Impact and Results of Telecommunications Deregulation," Guest Editorial in *IEEE Communications Magazine*, vol. 37, no. 10, p. 98 (October 1999).
8. C.A. Eldering, "Prospects for Broadband Deployment in a Deregulated Environment", Guest Editorial in *IEEE Communications Magazine*, vol. 36, no. 7, p. 86 (July 1998).
9. S. Wang, S.T. Kowel, C.A. Eldering, "Differential Detection with Polymer-Based Etalon Modulators," *IEEE Journal of Lightwave Technology*, vol. 16, no. 3, pp. 448-452 (March 1998).
10. C.A. Eldering, J.P. Blasko, A. Brown, "Comparative Analysis of Provisional Patents Under US and UK Law," *Journal of the Patent and Trademark Office Society*, vol. 79, no. 11, pp. 791-881 (November 1997).

11. C.A. Eldering, “Customer Premises Equipment for Residential Broadband Networks,” *IEEE Communications Magazine*, vol. 35, no. 6, pp. 114-121 (June 1997).
12. N. Omoigui, M. Sirbu, C.A. Eldering, and N. Himayat, “Comparing Integrated Broadband Architectures from an Economic and Public Policy Perspective,” in *The Internet and Telecommunications Policy Research*, G.W. Brock and G.L. Rosston, eds. (Lawrence Erlbaum Associates, NJ, 1996).
13. C.A. Eldering, N. Himayat and F.M. Gardner, “CATV Return Path Characterization for Reliable Communications,” *IEEE Communications Magazine*, vol. 33, no. 8, pp. 62-69 (August 1995).
14. D. Shen, S.T. Kowel, and C.A. Eldering, “Amorphous Silicon Thin-Film Photodetectors for Optical Interconnection,” *Optical Engineering*, vol. 34, no. 3, pp. 881-886 (March 1995).
15. C.A. Eldering, F. Herrerias, R. Martín, P.J. García, "Burst Mode Clock Recovery System for Fiber Optic Receivers," *IEEE Journal of Lightwave Technology,* vol. 12, no. 2, pp. 271-279 (February 1994).
16. C.A. Eldering, "Theoretical Determination of Sensitivity Penalty for Burst Mode Fiber Optic Receivers," *IEEE Journal of Lightwave Technology,* vol. 11, no. 12, pp. 2145-2149 (December 1993).
17. C.A. Eldering and A. Martinéz, "An Out-of-Band Signalling Technique for Passive Optical Networks," *International Journal of Digital and Analog Communication Systems*, vol. 6, pp. 49-52 (1993).
18. C.A. Eldering, A. Dienes, and S.T. Kowel, "Time Response Limitations of Etalons as Calculated From Frequency Analysis," *Optical Engineering,* vol. 32, no. 3, pp. 464-468 (March 1993).
19. S.T. Kowel and C.A. Eldering, "Polymer Etalons and Free Space Interconnects," in *Polymers for Lightwave and Integrated Optics: Technology and Applications*, Lawrence A. Hornak, Editor (Marcel Dekker, 1992).
20. C.A. Eldering, A. Knoesen and S.T. Kowel, "Use of Fabry-Perot Devices for the Characterization of Polymeric Electro-Optic Films," *Journal of Applied Physics,* vol. 69, no. 6, pp. 3676-3686 (March 15, 1991).
21. C.A. Eldering, S.T. Kowel, M.A. Mortazavi and P. Brinkley, "Electro-Optic Polymer Materials and Devices for Global Optical Interconnects," *Applied Optics*, vol. 29, no. 8, pp. 1142-1149 (March 1990).
22. C.A. Eldering, S.T. Kowel, and A. Knoesen, "Electrically Induced Transmissivity Modulation in Polymeric Thin Film Fabry-Perot Etalons," *Applied Optics*, vol. 28, no. 20, pp. 4442-4445 (October 1989).
23. C.A. Eldering, S.T. Kowel, A. Knoesen, B.L. Anderson and B.G. Higgins, "Characterization of Modulated Spin-Coated and L/B Thin Film Etalons," *Thin Solid Films* vol. 179, pp. 535-542 (1989).
24. S.T. Kowel, R. Selfridge, C.A. Eldering, N. Matloff, P.Stroeve, B. Higgins, M.P. Srinivasan and L.B. Coleman, "Future Applications of Ordered Polymeric Thin Films," in *Thin Solid Films*, vol. 152, pp. 377-403 (1987).

**PUBLICATIONS IN CONFERENCE PROCEEDINGS:**

1. C.A. Eldering, “An Overview of Wired Broadband Access Systems,” *Proceedings of the IEEE Sarnoff Symposium on Advances on Wired and Wireless Communications*, pp. 1-7 (Trenton, NJ, March 19, 1997).
2. R. Mason, N. Himayat, C.A. Eldering, N. Omoigui, M. Sirbu “Overview of Hybrid Fiber-Coax and Fiber-in-the-Loop Architectures,” *Proceedings of the 1995 National Fiber Optic Engineers Conference*, pp. 284-291 (Boston, MA, June 18-22, 1995).
3. C.A. Eldering, F.M. Gardner, N. Himayat, “Performance Comparison of Multiple-Access Techniques in Hybrid Fiber-Coax Return Systems,”*1995 Optical Fiber Conference Technical Digest* (San Diego, CA, Feb 26- Mar 3, 1995).
4. N. Himayat, C.A. Eldering, M. Kolber, E. Dickinson, “Characteristics of Hybrid Fiber-Coax Return Systems,” *1995 SCTE Conference on Emerging Technologies Proceedings Manual* (Orlando, FL, Jan 4-6, 1995).

5. C.A. Eldering, M. Kauffman, D. Grubb, S. Warwick, and G. Hawley, "Engineering Requirements for Hybrid Fiber-Coax Telephony Systems, *1994 NCTA Technical Papers* (New Orleans, LA, May 23-25, 1994).
6. D.S. Shen, S.T. Kowel, and C.A. Eldering, "Amorphous Silicon Thin Film Photodetectors for Optical Interconnection", *Proceedings of the International Parallel Processing Symposium* (Cancún, Mexico, April 26-29, 1994).
7. C.A. Eldering, G. Van der Plas, and J. De Groote, "Burst and Bit Synchronization Methods for Passive Optical Networks," *Proceedings of the Fourth IEEE Workshop on Local Optical Networks* (Versailles, France, September 1992).
8. C.A. Eldering and A. Martín, "System Specification and Requirements for Fiber in the Loop Systems," *Proceedings of SPIE Symposium on Opto-Electronics/Fibers* (Boston, MA, September 1992).
9. C.A. Eldering, F. Neira and J. Rueda, "The First Generation of Fiber Provided Subscriber Services for Spain," *Proceedings, Telco 92* (Madrid, Spain, May 1992).
10. P.J. García, R. Martín, C.A. Eldering, A. Martín, "Consideraciones de Diseño de Sistemas TDM/TDMA por Fibra Optica para el Area de Distribución de Abonados," *Proceedings, TELECOM I+D* (Madrid, Spain, November 1991).
11. C.A. Eldering, S. Allaire, A. Martín, R. Martín, F. Marcel, "Transmitter and Receiver Requirements for Time Division Multiple Access Passive Optical Networks," *Proceedings of the Third IEEE Workshop on Local Optical Networks* (Tokyo, Japan, September 1991).
12. J. Rueda García and C.A. Eldering, "Subscriber Loop Optical Distribution Architecture (SODA): A Cost Effective TDM/TDMA Fiber System," *Fiber Networks for Telephony and CATV*, SPIE vol. 1578, pp. 68-78 (Boston, MA, September 1991).
13. D. Yankelevich, A. Knoesen, C.A. Eldering and S.T. Kowel, "Reflection-Mode Polymeric Interference Modulators," *Proceedings of the SPIE Symposium on Optical Applied Science and Engineering* ( San Diego, CA, August 1991).
14. C.A. Eldering, A. Knoesen and S.T. Kowel, "Characterization of Polymeric Electro-Optic Films Using Metal Mirror/Electrode Fabry-Perot Etalons," *Nonlinear Optical Properties of Organic Materials III*, SPIE Vol. 1337, pp. 348-357 (San Diego, CA, July 1990).
15. M. Landgraf, C.A. Eldering, P.F. Brinkley and S.T. Kowel, "Receiver and Transmitter Designs for Optical Interconnects," *Optical Information-Processing Systems and Architectures II*, SPIE vol. 1347, pp. 580-591 (San Diego, CA, July 1990).
16. C.A. Eldering, S.T. Kowel , P. Brinkley, N. Matloff, T. Schubert, R. Gosula, "Fixed Optical Interconnects for Concurrent Computing Systems," *Optical Information Processing Systems and Architectures* , SPIE vol. 1151, pp. 72-82 (San Diego, CA, August 1989).
17. N. Matloff, T. Schubert, S. Kowel, C.A. Eldering and M. Loving, "Performance Analysis of the OPTIMUL Multiprocessor Interconnect," *Proceedings of the IEEE Phoenix International Conference on Computers and Communications* (Phoenix, AZ, 1989).
18. N. Matloff, S.T. Kowel and C.A. Eldering, "OPTIMUL: An Optical Interconnect for Multiprocessor Systems," *Proceedings of the 1988 ACM International Conference on Supercomputing,* (St- Malo, France, 1988).
19. D.J. Burns, M.T. Pronobis, C.A. Eldering and R.J. Hillman, "Reliability/Design Assessment by Internal Node Timing Margin Analysis Using Laser Photocurrent Injection," *Proceedings of the IEEE International Reliability Physics Symposium,* pp. 76-82 (Las Vegas, NV, 1984).
20. M.J. Walter, C.A. Eldering, K.M. Krevis and J.R. Haberer, "Internal Node Testing by Tester Aided Voltage Contrast," *Proceedings of the International Symposium for Testing and Failure Analysis*, pp. 156-161 (San Jose, CA, 1982).

**PRESENTATIONS:**

1. Eldering, C.A., Moderator, Panel on A Framework for Strategic Patenting, 8th Annual IP Dealmakers Forum (New York, 2021).
2. Eldering, C.A., Chair of Inaugural 2018 LF Dealmakers Forum (New York, NY, 2018).
3. Eldering, C.A., Moderator, Panel on Leveraging Data to Identify Valuable Patents, 5th Annual IP Dealmakers Forum (New York, NY, 2018).
4. Eldering, C.A., Moderator, Panel on Trade Secrets – What IP Investors Need to Know, 6th Annual IP Dealmakers Forum (New York, NY, 2016)
5. Eldering, C.A. and de Wit, S., IP Under the Microscope: Using Patent Valuation Wisely. Presentation to CIP Forum 2011 (Gothenburg, Sweden, 2011).
6. Eldering, C.A. What's a patent worth? Presentation to Princeton Chapter of American Society of Appraisers, Princeton, NJ (May 18, 2009).
7. Eldering, C.A. Patent Purchasing: What makes a patent transaction possible? 10th Annual Intellectual Property Institute – WSBA Continuing Legal Education, (March 11, 2005).
8. Eldering, C. A. and Paratore, B. Video Technology-Past, Present & Future. *United States Patent and Trademark Office Technology Fair,* (June 10, 2004).
9. Eldering, C.A. Testimony before the PA House Committee. *House Bill 1516*, (January 27, 2000).
10. Eisenach, J., R. May and Eldering, C.A. *Regulatory Overkill: Pennsylvania's Proposal to Breakup Bell Atlantic*, (December 16, 1999).
11. Eldering, C.A. Comments before the Federal Communications Commission. *Regulating Cable Internet Services,* (May 25, 1999).
12. Eldering, C.A. Panel participant in The ADSL Forum. *Washington DC Summit*, (March, 1999).
13. Eldering, C.A. Panel participant in Online Advertising: What It Is, Where It Is Going. *Speech in the Digital World: The First Amendment and Advertising,* sponsored by the Progress and Freedom Foundation, (November, 1998).
14. Eldering, C.A. Panel participant in Deregulating Digital Transport: The Bandwidth Crisis and the Role of Government. *Progress & Freedom Foundation's 5th Annual Cyberspace and the American Dream Aspen Summit 1998,* (August, 1998), broadcast on C-SPAN.
15. Eldering, C.A. Evolution of Broadband Access Technologies and Systems. *Networld + Interop '97; The 4th Annual Engineer Conference,* (May, 1997).
16. Eldering, C.A. An Overview of Wired Broadband Access Systems. *IEEE Sarnoff Symposium on Advances on Wired and Wireless Communications,* (March, 1997).
17. Eldering, C.A. Technology: Past and Present – The Impact of Network Competitors. Communications Media Center at New York Law School, *Seminar on Cable TV Franchise Renewals: Business as Usual or A Time for New Priorities?*, (November, 1996).
18. Eldering, C.A. Broadband Access Technologies. *The 8th Annual Digital Audio/Video Workshop*, (October, 1996).
19. Eldering, C.A. Burst Mode Receivers for Fiber Optic Networks. *1995 IEEE/LEOS Summer Topical Meetings on IC's for New Age Lightwave Communications*, (August, 1995).
20. Eldering, C.A. Performance Comparison of Multiple-Access Techniques in Hybrid Fiber-Coax Return Systems. *1995 Optical Fiber Conference,* (February, 1995).
21. Eldering, C.A. Characteristics of Hybrid Fiber-Coax Return Systems. *1995 SCTE Conference on Emerging Technologies*, (January, 1995).
22. Eldering, C.A. Engineering Requirements for Hybrid Fiber-Coax Telephony Systems. *NCTA Engineering Committees 1994 Technical Program*, (May, 1994).

23. Eldering, C.A. Burst and Bit Synchronization Methods for Passive Optical Networks. *Fourth IEEE Workshop in Local Optical Networks*, (September, 1992).
24. Eldering, C.A. Transmitter and Receiver Requirements for Time Division Multiple Access Passive Optical Networks. *Third IEEE Workshop on Local Optical Networks*, (September, 1991).
25. Eldering, C.A. Subscriber Loop Optical Distribution Architecture (SODA): A Cost Effective TDM/TDMA Fiber System. *Fiber Networks for Telephony and CATV*, (September, 1991).
26. Eldering, C.A. Fixed Optical Interconnects for Concurrent Computing Systems. *Optical Information Processing Systems and Architectures*, (August, 1989).

**TEACHING APPOINTMENTS:**

- University of California at Davis. Lecturer, Electronics Laboratory, (1987-88).
- State University of New York, Utica/Rome. Adjunct Professor, Electronics, (1985-86).

**REPORTS, THESES, OTHER PUBLICATIONS:**

1. Charles Eldering and Juan Gisone. Claims-based patent valuation. *Intellectual Asset Management Magazine,* (Issue 50 November/December 2011).
2. Charles A. Eldering, Technology, Patents & Licensing, Inc. and Expanse Networks, Inc., Amici Curiae Supporting MercExchange L.L.C., *eBay Inc. v. MercExchange L.L.C.,* on Writ of Certiorari to the United States Court of Appeals for the Federal Circuit (2006).
3. Keeler, P. and C.A. Eldering, S. Weiswasser, A. Weixel and H. Feld. *Reply Comments of Next Level Communications*, CC Docket No. 98-147. FCC Proceedings on Deployment of Wireline Services Offering Advanced Telecommunications Capability. (October 16, 1998).
4. Eisenach, J. and C.A. Eldering. *Comments of the Progress and Freedom Foundation*, CC Docket No. 98-146. FCC Proceedings on Deployment of Advanced Telecommunications Capability to All Americans in a Reasonable and Timely Fashion, and Possible Steps to Accelerate Such Deployment Pursuant to Section 706 of the Telecommunications Act of 1996. (September 14, 1998).
5. Eames, T., C.A. Eldering and J. Bernstein. *Reply Comments of Next Level Communications*, RM no. 9244, file no. CCB/CPD 98-15. FCC Proceedings on Petition of Alliance for Public Technology Requesting Issuance of Notice of Inquiry and Notice of Proposed Rulemaking to Implement Section 706 of the 1996 Telecommunications Act. (May 4, 1998).
6. Eames, T., C.A. Eldering and J. Bernstein. *Comments of Next Level Communications*, CC Docket No. 98-11. FCC Proceedings on Petition of Bell Atlantic Corporation for Relief from Barriers to Deployment of Advanced Telecommunications Services. (April 6, 1998).
7. Bernstein, J., T. Eames and C.A. Eldering. *Comments of Next Level Communications*, CC Docket No. 98-32. FCC Proceedings on Petition of Ameritech Corporation to Remove Barriers to Invest in Advanced Telecommunications Capacity. (April 6, 1998).
8. Eldering, C.A. and J. Bernstein. *Comments of Next Level Communications*, CC Docket No. 98-26. Petition of US West Communications, Inc. for Relief from Barriers to Deployment of Advanced Telecommunications Services. (April 6, 1998).
9. Eames, T. and C.A. Eldering. Going All-Digital. *Telephony*, (August 18, 1997).
10. Blasko, J.P., C.A. Eldering and A. Brown. Provisional Applications Offer Patentees Priority. *National Law Journal*, (June 16, 1997).
11. Eames, T., B. Weeks and C.A. Eldering. A Winning Solution. *Telephony*, (June 2, 1997): 150-162.

12. Eldering, C.A. Analysis of Fiber to the Curb and Fiber to the Home Architectures. Internal Report prepared for *Telettra España.* (August, 1990).
13. Eldering, C.A. Electro-Optic Polymeric Thin Films and Device. *Ph.D. Dissertation*, University of California, Davis, (1997).
14. Eldering, C.A., B.J. Walker, S.P. Ilnitzki and D.J. Holtzhauer. Temperature Measurements Using Infrared Techniques. *Internal Government Report*, Rome Air Development Center (March, 1986).
15. Eldering, C.A. Evaluation of the Use of p-n Structures as Photodetectors in Silicon Integrated Circuits. *Master's Thesis*, (June, 1985), also published as a Government technical report, RADC-TR-85-123.

**ISSUED US PATENTS:**

1. U.S. Patent 12,243,654 Computer implemented identification of genetic similarity
2. U.S. Patent 12,113,720 Systems and methods for creating situational networks
3. U.S. Patent 12,106,862 Determination and display of likelihoods over time of developing age-related disease
4. U.S. Patent 12,043,411 Systems and methods for tethered drones
5. U.S. Patent 11,956,515 Creating customized programming content
6. U.S. Patent 11,791,054 Comparison and identification of attribute similarity based on genetic markers
7. U.S. Patent 11,741,499 Methods and systems using a multi-platform targeted advertising system to select advertisements within a target geographic area
8. U.S. Patent 11,735,323 Computer implemented identification of genetic similarity
9. U.S. Patent 11,678,026 Creating customized programming content
10. U.S. Patent 11,621,089 Attribute combination discovery for predisposition determination of health conditions
11. U.S. Patent 11,600,393 Computer implemented modeling and prediction of phenotypes
12. U.S. Patent 11,581,096 Attribute identification based on seeded learning
13. U.S. Patent 11,581,098 Computer implemented predisposition prediction in a genetics platform
14. U.S. Patent 11,545,269 Computer implemented identification of genetic similarity
15. U.S. Patent 11,514,085 Learning system for pangenetic-based recommendations
16. U.S. Patent 11,515,046 Treatment determination and impact analysis
17. U.S. Patent 11,515,047 Computer implemented identification of modifiable attributes associated with phenotypic predispositions in a genetics platform
18. U.S. Patent 11,495,360 Computer implemented identification of treatments for predicted predispositions with clinician assistance
19. U.S. Patent 11,482,340 Attribute combination discovery for predisposition determination of health conditions
20. U.S. Patent 11,363,347 Creating customized programming content
21. U.S. Patent 11,348,691 Computer implemented predisposition prediction in a genetics platform
22. U.S. Patent 11,348,692 Computer implemented identification of modifiable attributes associated with phenotypic predispositions in a genetics platform
23. U.S. Patent 11,166,074 Creating customized programming content
24. U.S. Patent 11,003,694 Learning systems for pangenetic-based recommendations

25. U.S. Patent 10,667,009 Profiling and identification of television viewers
26. U.S. Patent 10,438,240 Methods and systems using a multi-platform targeted advertising system to select advertisements within a target geographic area
27. U.S. Patent 10,379,812 Treatment determination and impact analysis
28. U.S. Patent 10,231,031 Queue based advertisement scheduling and sales
29. U.S. Patent 10,206,012 Queue based head-end advertisement scheduling method and apparatus
30. U.S. Patent 10,116,983 System and method for managing advertising in program streams
31. U.S. Patent 10,182,258 Profiling and identification of television viewers
32. U.S. Patent 10,104,414 Method and system for targeted advertisement filtering and storage
33. U.S. Patent 9,918,117 System and method for managing advertising in program streams
34. U.S. Patent 9,906,819 Advertisement management system for digital video streams
35. U.S. Patent 9,888,297 Queue based advertisement scheduling and sales
36. U.S. Patent 9,602,884 Customizing programming content
37. U.S. Patent 9,582,647 Attribute combination discovery for predisposition determination
38. U.S. Patent 9,544,631 Queue-based head-end advertisement scheduling method and apparatus
39. U.S. Patent 9,524,194 Performing services on behalf of physical devices
40. U.S. Patent 9,479,803 Alternative advertising in prerecorded media
41. U.S. Patent 9,473,814 Profiling and identification of television users
42. U.S. Patent 9,426,315 Grouping advertisement subavails
43. U.S. Patent 9,432,733 Queue based advertisement scheduling and sales
44. U.S. Patent 9,390,423 Methods and systems for verifying advertisements in a multi-platform targeted advertising system
45. U.S. Patent 9,232,252 Queue-based head-end advertisement scheduling method and apparatus
46. U.S. Patent 9,170,992 Treatment determination and impact analysis
47. U.S. Patent 9,165,604 Alternative advertising in prerecorded media
48. U.S. Patent 9,147,112 Advertisement Detection
49. U.S. Patent 9,124,949 Grouping advertisement subavails
50. U.S. Patent 9,043,827 Method and system for providing conditional access to encrypted content
51. U.S. Patent 9,031,870 Pangenetic Web User Behavior Prediction System
52. U.S. Patent 8,934,843 Weighting factor adjustment in adaptive antenna arrays
53. U.S. Patent 8,930,204 Determining lifestyle recommendations using aggregated personal information
54. U.S. Patent 8,837,920 Alternative Advertising in prerecorded media
55. U.S. Patent 8,813,126 Advertisement Filtering and Storage for Targeted Advertisement Systems
56. U.S. Patent 8,789,091 Queue based advertisement scheduling and sales
57. U.S. Patent 8,788,286 Side effects prediction using co-associating bioattributes
58. U.S. Patent 8,788,283 Modifiable attribute identification
59. U.S. Patent 8,776,111 Methods and systems for generating subscriber usage profiles in a multi-platform targeted advertising system

60. U.S. Patent 8,775,287 Method and system for determining insurance needs
61. U.S. Patent 8,677,401 Grouping advertisement subavails
62. U.S. Patent 8,667,536 Profiling and identification of television viewers
63. U.S. Patent 8,655,915 Pangenetic web item recommendation system
64. U.S. Patent 8,655,908 Predisposition modification
65. U.S. Patent 8,655,899 Attribute method and system
66. U.S. Patent 8,635,087 Aggregating personal information
67. U.S. Patent 8,634,652 Video entity recognition in compressed digital video streams
68. U.S. Patent 8,606,761 Lifestyle optimization and behavior modification
69. U.S. Patent 8,581,873 Elastomeric wave tactile Interface
70. U.S. Patent 8,577,296 Weighting factor adjustment in adaptive antenna arrays
71. U.S. Patent 8,570,938 Method and system for adaptive antenna array pairing
72. U.S. Patent 8,484,677 Advertisement monitoring system
73. U.S. Patent 8,473,457 Method of distributing contact and calendar records
74. U.S. Patent 8,458,121 Predisposition prediction using attribute combinations
75. U.S. Patent 8,458,097 System, method and software for healthcare selection based on pangenetic data
76. U.S. Patent 8,452,619 Masked data record access
77. U.S. Patent 8,424,043 Method and system for detecting unscheduled events and recording programming streams
78. U.S. Patent 8,417,675 Method of distributing contact and calendar records
79. U.S. Patent 8,386,519 Pangenetic web item recommendation system
80. U.S. Patent 8,374,387 Video entity recognition in compressed digital video streams
81. U.S. Patent 8,365,216 Video stream modification to defeat detection
82. U.S. Patent 8,358,204 Dynamic tactile interface
83. U.S. Patent 8,346,307 Method of displaying contact information
84. U.S. Patent 8,335,854 Performing services on behalf of low-power devices
85. U.S. Patent 8,326,648 System for secure mobile healthcare selection
86. U.S. Patent 8,306,975 Expanded interest recommendation engine and variable personalization
87. U.S. Patent 8,290,351 Alternative advertising in prerecorded media
88. U.S. Patent 8,280,633 Weather risk estimation system and method
89. U.S. Patent 8,273,425 Nanotube assisted self-cleaning material
90. U.S. Patent 8,266,256 Virtualization for low-power networks
91. U.S. Patent 8,258,956 RFID tag filtering and monitoring
92. U.S. Patent 8,255,403 Pangenetic web satisfaction prediction system
93. U.S. Patent 8,253,703 Elastomeric wave tactile interface
94. U.S. Patent 8,234,244 Method of distributing contact and calendar records
95. U.S. Patent 8,225,347 Advertisement filtering and storage for targeted advertisement systems
96. U.S. Patent 8,224,835 Expanding attribute profiles

| | |
|---|---|
| 97. U.S. Patent 8,209,319 | Compiling co-associating bioattributes |
| 98. U.S. Patent 8,200,509 | Masked data record access |
| 99. U.S. Patent 8,185,597 | Providing notifications to an individual in a multi-dimensional personal information network |
| 100.U.S. Patent 8,185,461 | Longevity analysis and modifiable attribute identification |
| 101.U.S. Patent 8,180,675 | System and method for automatically managing avail inventory data and avail pricing |
| 102.U.S. Patent 8,151,295 | Queue based advertisement scheduling and sales |
| 103.U.S. Patent 8,150,422 | Method of displaying contact information |
| 104.U.S. Patent 8,126,486 | Adaptive antenna weighting system for wireless local area and personal area networks |
| 105.U.S. Patent 8,121,915 | Generating financial plans using a personal information aggregator |
| 106.U.S. Patent 8,116,616 | Alternative advertising in prerecorded media |
| 107.U.S. Patent 8,108,406 | Pangenetic web user behavior prediction system |
| 108.U.S. Patent 8,099,424 | Treatment determination and impact analysis |
| 109.U.S. Patent 8,087,045 | Grouping advertisement subavails |
| 110.U.S. Patent 8,077,021 | Dynamic tactile interface |
| 111.U.S. Patent 8,075,980 | Diffraction grating assisted self-cleaning material |
| 112.U.S. Patent 8,073,708 | Aggregating personal healthcare information |
| 113.U.S. Patent 8,073,194 | Video entity recognition in compressed digital video streams |
| 114.U.S. Patent 8,072,314 | Secondary card reader |
| 115.U.S. Patent 8,065,324 | Weight and diet attribute combination discovery |
| 116.U.S. Patent 8,055,643 | Predisposition modification |
| 117.U.S. Patent 8,051,033 | Predisposition prediction using attribute combinations |
| 118.U.S. Patent 8,046,798 | Profiling and identification of television viewers |
| 119.U.S. Patent 8,024,348 | Expanding attribute profiles |
| 120.U.S. Patent 7,984,466 | Advertising management system for digital video streams |
| 121.U.S. Patent 7,970,827 | Providing notifications to an individual in a multi-dimensional personal information network |
| 122.U.S. Patent 7,962,934 | Advertising monitoring system |
| 123.U.S. Patent 7,952,480 | RFID tag filtering and monitoring |
| 124.U.S. Patent 7,949,565 | Privacy-protected advertising system |
| 125.U.S. Patent 7,941,434 | Efficiently compiling co-associating bioattributes |
| 126.U.S. Patent 7,941,329 | Insurance optimization and longevity analysis |
| 127.U.S. Patent 7,933,912 | Compiling co-associating bioattributes using expanded bioattribute profiles |
| 128.U.S. Patent 7,930,714 | Video detection and insertion |
| 129.U.S. Patent 7,917,438 | System for secure mobile healthcare selection |
| 130.U.S. Patent 7,870,576 | Targeted advertising through electronic program guide |
| 131.U.S. Patent 7,844,609 | Attribute combination discovery |

| | |
|---|---|
| 132.U.S. Patent 7,818,310 | Predisposition modification |
| 133.U.S. Patent 7,810,114 | Advertisement filtering and storage for targeted advertisement systems |
| 134.U.S. Patent 7,809,154 | Video entity recognition in compressed digital video streams |
| 135.U.S. Patent 7,801,956 | Providing notifications to an individual in a multi-dimensional personal information network |
| 136.U.S. Patent 7,797,302 | Compiling co-associating bioattributes |
| 137.U.S. Patent 7,694,318 | Video detection and insertion |
| 138.U.S. Patent 7,690,013 | Advertisement monitoring system |
| 139.U.S. Patent 7,690,011 | Video stream modification to defeat detection |
| 140.U.S. Patent 7,689,682 | Obtaining lists of nodes of a multi-dimensional network |
| 141.U.S. Patent 7,500,258 | Advertisement subgroups for digital streams |
| 142.U.S. Patent 7,440,674 | Alternative advertising in prerecorded media |
| 143.U.S. Patent 7,432,811 | RFID tag filtering and monitoring |
| 144.U.S. Patent 7,420,458 | Secondary card reader |
| 145.U.S. Patent 7,331,057 | Grouping advertisement subavails |
| 146.U.S. Patent 7,328,448 | Advertisement distribution system for distributing targeted advertisements in television systems |
| 147.U.S. Patent 7,313,811 | Optical conversion device |
| 148.U.S. Patent 7,298,264 | RFID tag filtering and monitoring |
| 149.U.S. Patent 7,260,823 | Profiling and identification of television viewers |
| 150.U.S. Patent 7,240,355 | Subscriber characterization system with filters |
| 151.U.S. Patent 7,177,844 | Apparatus and method for activation of a security module in a set-top retail environment |
| 152.U.S. Patent 7,152,237 | Delivering advertisements to the set-top-box |
| 153.U.S. Patent 7,150,030 | Subscriber characterization system |
| 154.U.S. Patent 7,062,510 | Consumer profiling and advertisement selection system |
| 155.U.S. Patent 7,039,932 | Queue-based head-end advertisement scheduling method and apparatus |
| 156.U.S. Patent 6,915,530 | Ingress detection and characterization by time/frequency map |
| 157.U.S. Patent 6,882,709 | Enhanced broadband telephony services |
| 158.U.S. Patent 6,880,170 | Ingress detection and attenuation |
| 159.U.S. Patent 6,820,277 | Advertising management system for digital video streams |
| 160.U.S. Patent 6,714,917 | Subscriber identification based on electronic program guide data |
| 161.U.S. Patent 6,704,930 | Advertisement insertion techniques for digital video streams |
| 162.U.S. Patent 6,684,194 | Subscriber identification system |
| 163.U.S. Patent 6,615,039 | Advertisement subgroups for digital streams |
| 164.U.S. Patent 6,560,578 | Advertisement selection system supporting discretionary target market characteristics |
| 165.U.S. Patent 6,457,010 | Client-server based subscriber characterization system |
| 166.U.S. Patent 6,324,519 | Advertisement auction system |

| | |
|---|---|
| 167.U.S. Patent 6,321,384 | Noise reduction in cable return paths |
| 168.U.S. Patent 6,317,884 | Video, data, and telephony gateway |
| 169.U.S. Patent 6,298,348 | Consumer profiling system |
| 170.U.S. Patent 6,216,129 | Advertisement selection system supporting discretionary target market characteristics |
| 171.U.S. Patent 6,078,593 | Method and apparatus for reliable operation of universal voice grade cards |
| 172.U.S. Patent 5,881,362 | Method of ingress noise reduction in cable return paths |
| 173.U.S. Patent 5,742,591 | Interference cancellation system for CATV return transmissions |
| 174.U.S. Patent 5,479,451 | Method and device for data recovery in burst mode systems |
| 175.U.S. Patent 5,408,525 | Diverter interface between two telecommunication lines and a station set |
| 176.U.S. Patent 5,357,588 | Opto-electronic transducer device for optical link termination equipment and application thereof to various types of optical link |
| 177.U.S. Patent 4,813,772 | Electro-optical interface |
| 178.U.S. Patent 4,698,587 | Method of characterizing critical timing paths and analyzing timing related failure modes in very large scale integrated circuits |

**FUNDED RESEARCH PROPOSALS:**

- Raised $3.6 million in capital (December 1999 through April 2000) for Expanse Networks, Inc. for development of systems and intellectual property in the area of targeted advertising.
- Kowel, S.T., A. Knoesen (principal investigators) and C.A. Eldering (proposal co-author), *Polymeric Ultrathin Film Multilayered Modulators*, funded by NSF Quantum Electronics, Waves and Beams Program for approximately $300,000 over 3 years.

**PROFESSIONAL ACTIVITIES AND PUBLIC RECOGNITION:**

- Recognized in *IAM Strategy 250 – The World's Leading IP Strategists* published by *Intellectual Asset Management* (*IAM*) Magazine (2009-2011). *IAM Strategy 300* (2012-2013).
- Certified Passive Home Consultant, *Passive Home Institute.*
- Guest Editor. Feature topic: Patents and Telecommunications. IEEE Communications Magazine (July, 2000).
- Cited in "Who Owns the Knowledge Economy? Patent Wars." The Economist, (April 8-14, 2000).
- Cited in "Access: Not a Rocket Science" *Cable World,* (February, 2000).
- Cited in "Patents Considered Vital to Thrive on the Internet." *New York Times Outlook 2000*, (December, 1999).
- Guest Editor for Feature topic: Broadband Technologies and Trials. *IEEE Communications Magazine* (October, 1999).
- Guest Editor for Feature topic: Broadband Deployment in a Deregulated Environment. *IEEE Communications Magazine* (July, 1998).
- Member of *Network Reliability and Interoperability Council* and contributor to NRIC reports to FCC on interoperability and telecommunications deregulation.
- Senior Member, *IEEE*.
- Chair, *Access Subcommittee of IEEE Communications Society*.
- Member, Technical Program Committee and Session Chair, *IEEE Communications Society Broadband '96 Conference*.

- Invited speaker, 1995 *IEEE/LEOS Summer Topical Meeting*.
- Co-chair, 1991 S*PIE Fibers '91 Conference*.
- Chair, 1993 *SPIE Conference on LANs and MANS*.
- Invited participant, 1990 *Gordon Conference on Organic Thin Films*.

**LANGUAGES:**

- English: native language
- Spanish: speak, read, and write
- Portuguese: speak, read and write
- German: working knowledge
- Italian: working knowledge