(19) China National Intellectual Property Administration

(12) Utility Model Patent

(10) Authorized Public Notice No. CN 203211234U

(45) Authorized Public Notice Date 2013.09.25

(21) Application No. 201320217854.6

(22) Application Date 2013.04.26

(73) Patent Assignee Huizhou Huayitong Technology Co., Ltd.

Address 516000 Room 701, Floor A, Jinmai Mountain Villa F, Maidi Mumiankeng, Huizhou, Guangdong Province

(72) Inventor Yu Chunlan

(51) Int. Cl.

B60R 16/033 (2006.01)

(ESM) An invention patent application for the same invention has been submitted on the same day

Claims 1 page Description 3 pages Attached figures 6 pages

(54) Utility model name

Automotive Emergency Starting Device

(57) Abstract

The utility model relates to an automotive starting device, specifically, an emergency automotive starting device. The utility model consists of an internal battery, a charging input interface, a display module, a control module, a relay, input buttons and an output terminal, wherein the main contacts of the relay are connected to the internal battery and the output terminal; The control module includes a microprocessor, and the microprocessor controls the opening and closing of the relay through the relay switch circuit to control current output from the internal battery to the output terminal; it also includes an external battery reverse polarity detection circuit that signals correct or incorrect external battery wiring. The internal and external batteries of the device are connected through a relay. Under normal circumstances and after the automobile is successfully started, the relay is in disconnected state, so that the device does not generate sparks when it is connected and disconnected. In addition, when the battery is connected to the output terminal with the wrong polarity, the relay controlled by the microprocessor will not close, preventing the wrong polarity from causing a large flow of current.

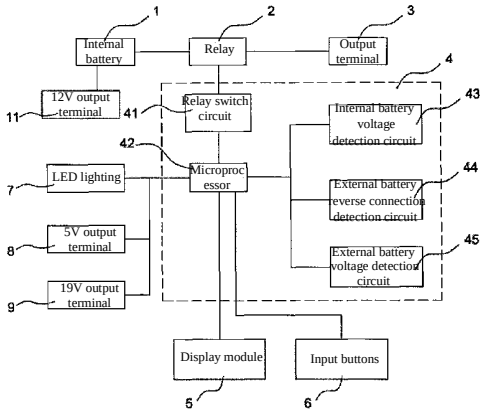

DELTRAN EX1008
IPR2024-01219

1. An emergency automotive starting device consisting of an internal battery (1), a charging input (10) interface, a display module (5), a control module (4), a relay (2), input buttons (6) and an output terminal (3), characterized by a connection between the main contacts of the relay (2) and the internal battery (1) and the output terminal (3); the control module (4) includes a microprocessor (42), and the microprocessor (42) controls the opening and closing of the relay (2) through the relay switch circuit (41) to control current output from the internal battery (1) to the output terminal (3); the control module also includes an external battery reverse connection detection circuit that provides a signal for correct or incorrect external battery wiring.

2. An emergency automotive starting device according to Claim 1, characterized by a control module (4) that includes an internal battery voltage detection circuit (43), and the internal battery voltage detection circuit (43) has a signaling connection to the microprocessor (42).

3. An emergency automotive starting device according to Claim 1, characterized by a control module (4) that includes an external battery voltage detection circuit (45), and the external battery voltage detection circuit (45) has a signaling connection to the microprocessor (42).

4. An emergency automotive starting device according to Claim 1, further characterized by including LED lighting (7) and an LED light driver circuit.

5. An emergency automotive starting device according to Claims 1 to 4, further characterized by including a 5V voltage output circuit and a 19V voltage output circuit; the 5V output circuit is connected to a 5V output terminal (8), and the 19V output circuit is connected to a 19V output terminal (9).

6. An emergency automotive starting device according to Claims 1 to 4, further characterized by including a 12V output terminal (11), and the 12V output terminal is connected to the internal battery (1).

DELTRAN EX1008
IPR2024-01219

An Emergency Automotive Starting Device

Technical field

[0001] The utility model is an automotive starting device, specifically, an emergency automotive starting device.

Background art

[0002] Transportation by automobile is essential to social production. Current gas vehicles have a battery inside the car. During the operation of the automobile engine, the battery is charged by a generator. When the automobile engine stops running, the battery can provide power to the automobile or start the engine. The batteries installed inside automobiles are generally lead-acid batteries. The capacity of lead-acid batteries becomes lower and lower after a certain number of charge and discharge cycles. Batteries may be disposed of directly after long-term use. When an automobile is in use, the automobile may not start due to battery over-discharge or battery failure. One common method is to replace the automobile battery with a separate battery to start the vehicle. A common emergency automotive starting power supply is a lead-acid battery that replaces the original car battery. When in use, because the lead-acid battery itself is relatively heavy and large, and lacks a polarity detection function, when the polarity of the connected emergency starting power supply is opposite to that of the original automobile battery, a large current may be generated, damage to the battery may occur, and even an explosion in severe cases. Additionally, when this type of single lead-acid battery is used as an emergency automotive starting power supply, it lacks an anti-spark design when connecting. Sparks can be generated instantly when the emergency power supply is connected or disconnected, which is unsafe.

Utility model content

[0003] This utility model provides an emergency automotive starting power supply to address the shortcomings above. The emergency automotive starting power supply in the present invention will not power on when the emergency starting power supply is connected to the automobile circuit with reversed polarity. In addition, the emergency automotive starting power supply in the present invention can effectively prevent the generation of electric sparks when connecting or disconnecting from the vehicle, improving safety.

[0004] The utility model is implemented as follows: an emergency automotive starting power supply, consisting of an internal battery, a charging input interface, a display module, a control module, a relay, input buttons, and an output terminal, wherein the main contacts of the relay are connected to the internal battery and the output terminal; the control module includes a microprocessor, and the microprocessor controls the opening and closing of the relay through the relay switch circuit to control current output from the internal battery to the output terminal; the control module also includes an external battery reverse connection detection circuit that provides a signal for correct or incorrect external battery wiring. The emergency automotive starting power supply in the present invention also includes a 12V output terminal, and the 12V output terminal is connected to the internal battery.

[0005] So that the internal battery voltage can be displayed on the display module, it is characterized by a control module that also includes an internal battery voltage detection circuit, and the internal battery voltage detection circuit has a signaling connection to the microprocessor.

[0006] So that the external battery voltage can be displayed on the display module, the control module also includes an external battery voltage detection circuit, and the external battery voltage detection circuit has a signaling connection to the microprocessor.

[0007] The emergency automotive starting device of the present invention also includes LED lighting and an LED light driver circuit.

[0008] For convenience of use, the emergency automotive starting device in the present invention also includes a 5V voltage output circuit and a 19V voltage output circuit; the 5V output circuit is

DELTRAN EX1008
IPR2024-01219

connected to the 5V output terminal, and the 19V output circuit is connected to the 19V output terminal.

[0009] The emergency automotive starting device in the present invention utilizes a built-in battery scheme. In addition, the internal battery and the external battery are connected through a relay. Under normal circumstances, the relay is in an off state. When the device is connected to an external vehicle battery, the device will detect the external battery voltage and display the voltage on the LCD simultaneously. At this time, pressing the JUMP button of the input buttons controls whether the relay is on or off, so that the device will not generate sparks when it is connected. After the vehicle is successfully started using the device, the device will turn the relay off within two seconds, disconnecting the external battery from the internal battery. The emergency automotive starting device will not generate sparks when it is removed, and the vehicle's generator will not reverse charge the device. Additionally, an external battery reverse connection detection circuit is provided inside the device. When the output terminal of the emergency automotive starting device of the present invention is connected to an external battery with the wrong polarity, the relay controlled by the microprocessor will not connect, preventing the wrong polarity from causing a large flow of current.

Description of attached drawings

[0010] Fig. 1 is a schematic diagram of the system for the present invention.

[0011] Fig. 2 is a schematic diagram of the control module circuit of the present invention.

[0012] Fig. 3 is a schematic diagram of the LED lighting circuit of the present invention.

[0013] Fig. 4 is a schematic diagram of the 5V output circuit of the present invention.

[0014] Fig. 5 is a schematic diagram of the 19V output circuit of the present invention.

[0015] Fig. 6 is a schematic front view of the present invention.

[0016] Fig. 7 is a schematic back view of the present invention.

[0017] Fig. 8 is a schematic right side view of the present invention.

[0018] Fig. 9 is a schematic left side view of the present invention.

[0019] In the attached drawings: 1-internal battery, 2-relay, 3-output terminal, 4-control module, 5-display module, 6-input button, 7-LED lighting device, 8-5V output terminal, 9-19V output terminal, 10-Charging input, 11-12V output terminal.

Specific embodiments

[0020] The present utility model is further described in detail below in conjunction with the accompanying diagrams and specific examples. However, the utility model is not limited to the following embodiments. Any changes or substitutions made on the principle of this example fall within the scope of protection claimed by this utility model.

[0021] In conjunction with Figures 1 to 9, an emergency automotive starting power supply consisting of an internal battery 1, a charging input 10 interface, a display module 5, a control module 4, a relay 2, input buttons 6 and an output terminal 3, wherein the main contacts of the relay 2 are connected to the internal battery 1 and the output terminal 3; the control module 4 includes a microprocessor 42, which controls the opening and closing of the relay 2 through the relay switch circuit 41 to control current output from the internal battery 1 to the output terminal 3; the control module 4 also includes an external battery reverse connection detection circuit 44 that provides a signal for correct or incorrect external battery wiring.

[0022] So that the internal battery 1 voltage can be displayed on the display module 5, it is characterized by a control module 4 that also includes an internal battery voltage detection circuit 43, and the internal battery voltage detection circuit 43 is connected to the microprocessor 42 signal.

[0023] So that the external battery voltage can be displayed on the display module 5, the control module 4 also includes an external battery voltage detection circuit 45, and the external battery voltage detection circuit 45 is connected to the microprocessor 42 signal.

[0024] The emergency automotive starting device in the present invention also includes LED lighting 7 and an LED light driver circuit.

[0025] For convenience of use, the emergency automotive starting device in the present invention

DELTRAN EX1008
IPR2024-01219

also includes a 5V voltage output circuit and a 19V voltage output circuit; the 5V output circuit is connected to the 5V output terminal 8, and the 19V output circuit is connected to the 19V output terminal 9. The emergency automotive starting power supply in the present invention also includes a 12V output terminal 11, and the 12V output terminal 11 is connected to the internal battery 1.

[0026] When the vehicle cannot start due to the vehicle's battery, the output terminal 3 of the emergency automotive starting device of the present invention is connected to the external battery, that is, the vehicle's battery to be started. Under normal circumstances, the relay is in an off state. If the output terminal 3 is connected to an external battery with incorrect polarity, a signal is provided to the microprocessor 42 through the external battery reverse connection detection circuit 44, so that the relay 2 controlled by the microprocessor 42 will not close, preventing the wrong polarity from causing a large flow of current. If the output terminal 3 is connected to the external battery with correct polarity, the external battery voltage detection circuit 45 will operate. The microprocessor 42 will detect the external battery voltage and simultaneously display this voltage on the LCD. If the external battery voltage is within the normal range, then the JUMP button of the input buttons 6 can be pressed to close the relay 2, and the internal battery will output current to the vehicle to be started through the output terminal 3. After the vehicle is started for two seconds, the microprocessor 42 controlled relay 2 will open so the output terminal 3 wiring can be disconnected. Since no current flows to the output terminal 3 after the relay 2 is disconnected, no sparks will be generated when it is removed. After the vehicle has been started and the wiring to output terminal 3 is removed, the emergency automotive starting device of the present invention has completed operation.

[0027] A signal is provided to the microprocessor 42 through the internal battery voltage detection circuit 43, so the internal battery 1 voltage can be displayed on the display module 5 to facilitate monitoring of battery charge. A signal is provided to the microprocessor 42 through the external battery voltage detection circuit 45, so the external battery voltage can be displayed on the display module 5 to facilitate understanding of the external battery condition.

[0028] To allow the internal battery 1 to be charged, a charging input 10 interface is provided on the device. Additionally, the device is also equipped with LED lighting 7 to facilitate illumination when lighting is insufficient. The device is also equipped with a 5V output terminal 8, 19V output terminal 9, and 12V output terminal 11, which can be used as a general power supply for other electrical equipment.

DELTRAN EX1008
IPR2024-01219

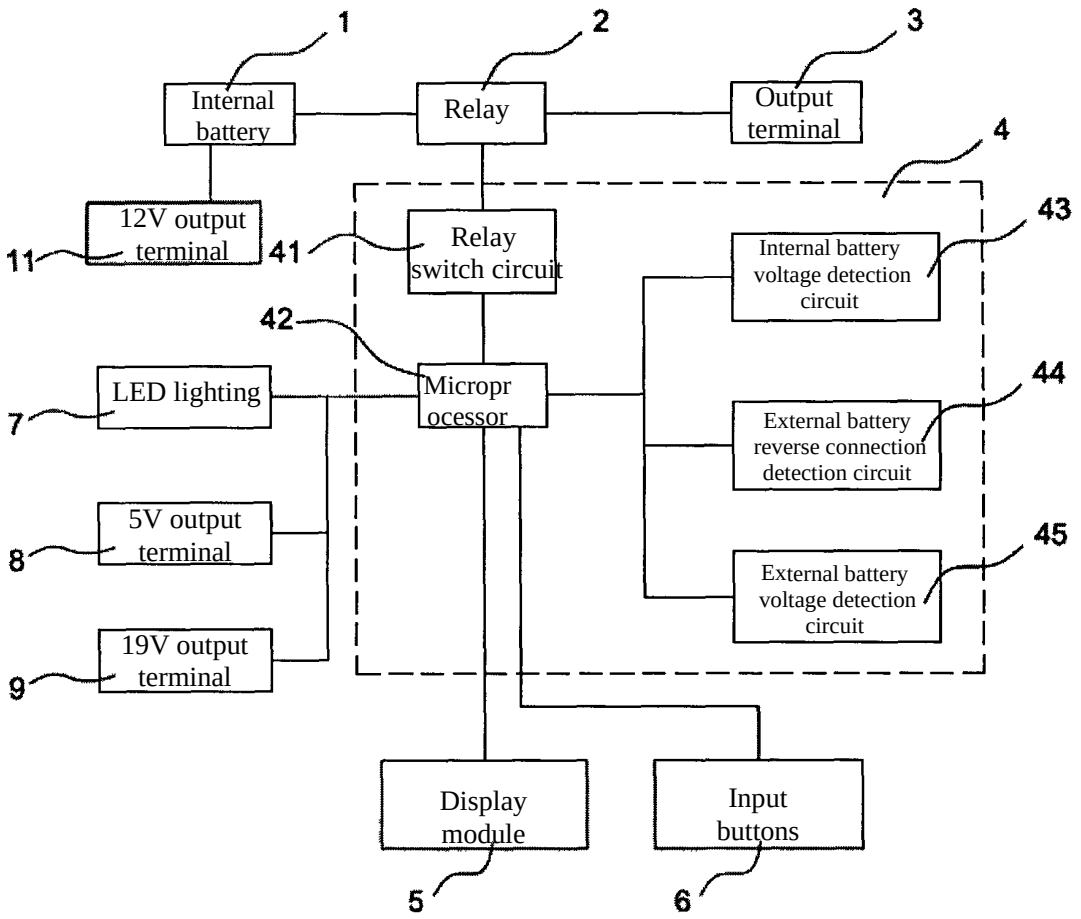
1
2
3
Internal battery
Relay
Output terminal
4
12V output terminal
11
41
Relay switch circuit
43
Internal battery voltage detection circuit
42
Micropr ocessor
44
LED lighting
7
External battery reverse connection detection circuit
5V output terminal
8
45
External battery voltage detection circuit
19V output terminal
9
Display module
Input buttons
5
6

Fig. 1

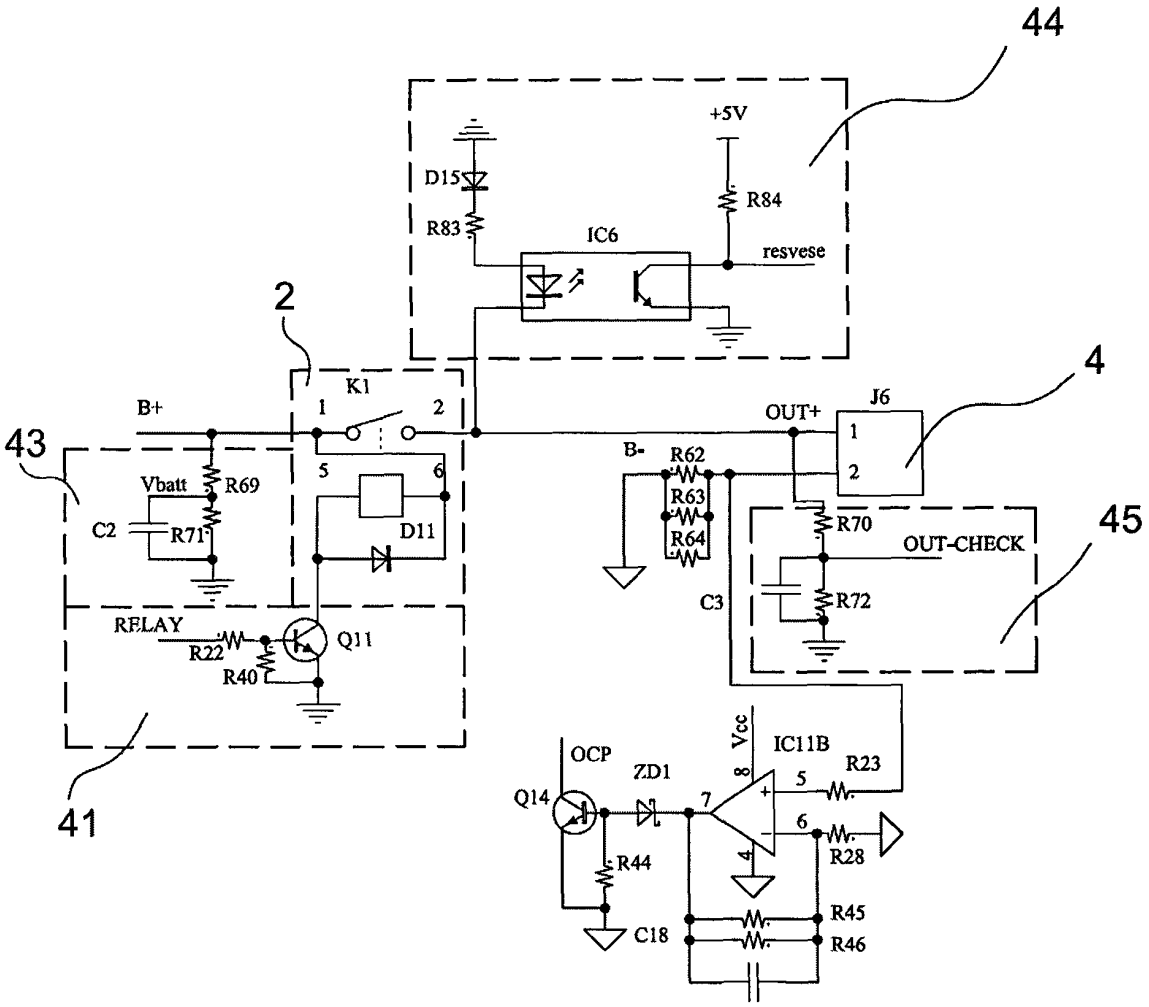
44
+5V
D15
R84
R83
IC6
resvese
2
K1
4
B+
1
2
OUT+
J6
43
B-
R62
5
6
Vbatt
R69
R63
1
2
C2
R71
D11
R64
R70
45
OUT-CHECK
C3
R72
RELAY
R22
Q11
R40
Vcc
IC11B
OCP
ZD1
R23
Q14
7
5
6
R28
R44
R45
C18
R46
41

Fig. 2

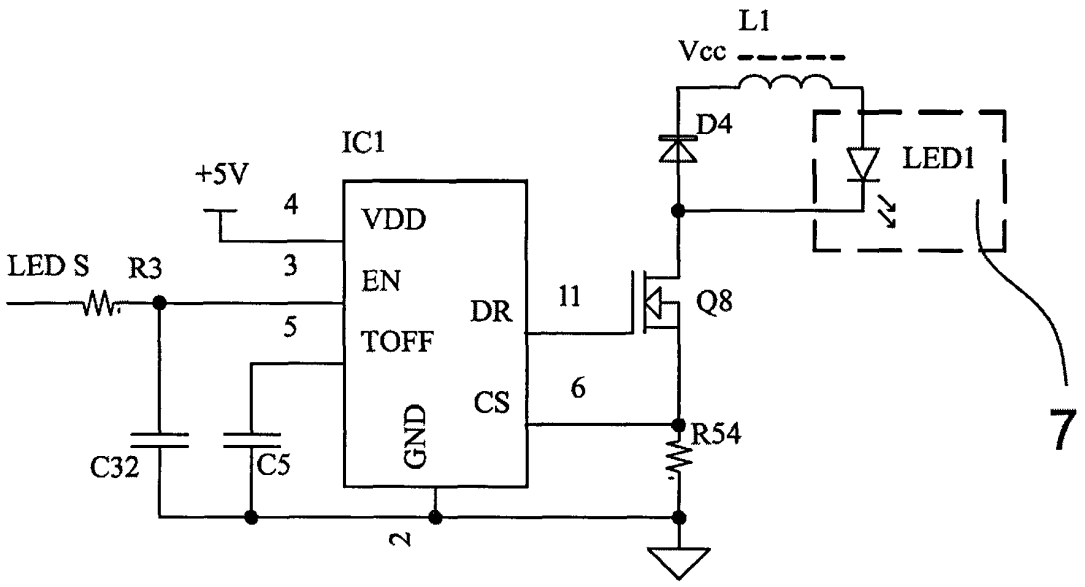
L1
Vcc
D4
LED1
IC1
+5V
4
VDD
LED S
R3
3
EN
11
Q8
DR
5
TOFF
6
CS
GND
R54
7
C32
C5
2

Fig. 3

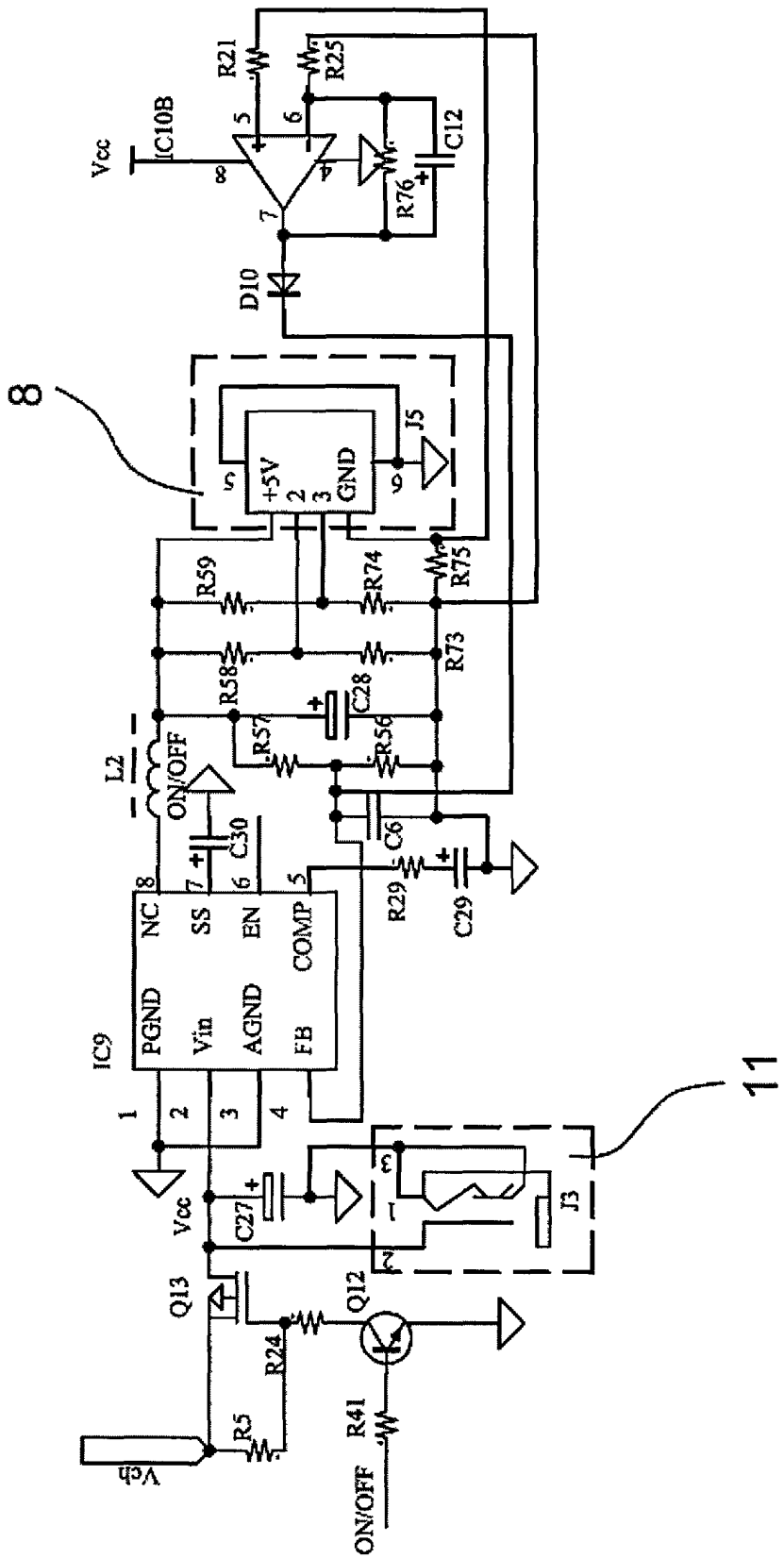
Vcc
IC10B
R21
R25
C12
R76
D10
8
J5
+5V
GND
R59
R74
R75
R73
R58
C28
R57
R56
L2
ON/OFF
C30
C6
R29
C29
NC
SS
EN
COMP
PGND
Vin
AGND
FB
IC9
11
J3
C27
Q13
Q12
R24
R5
R41
Vch
ON/OFF

Fig. 4

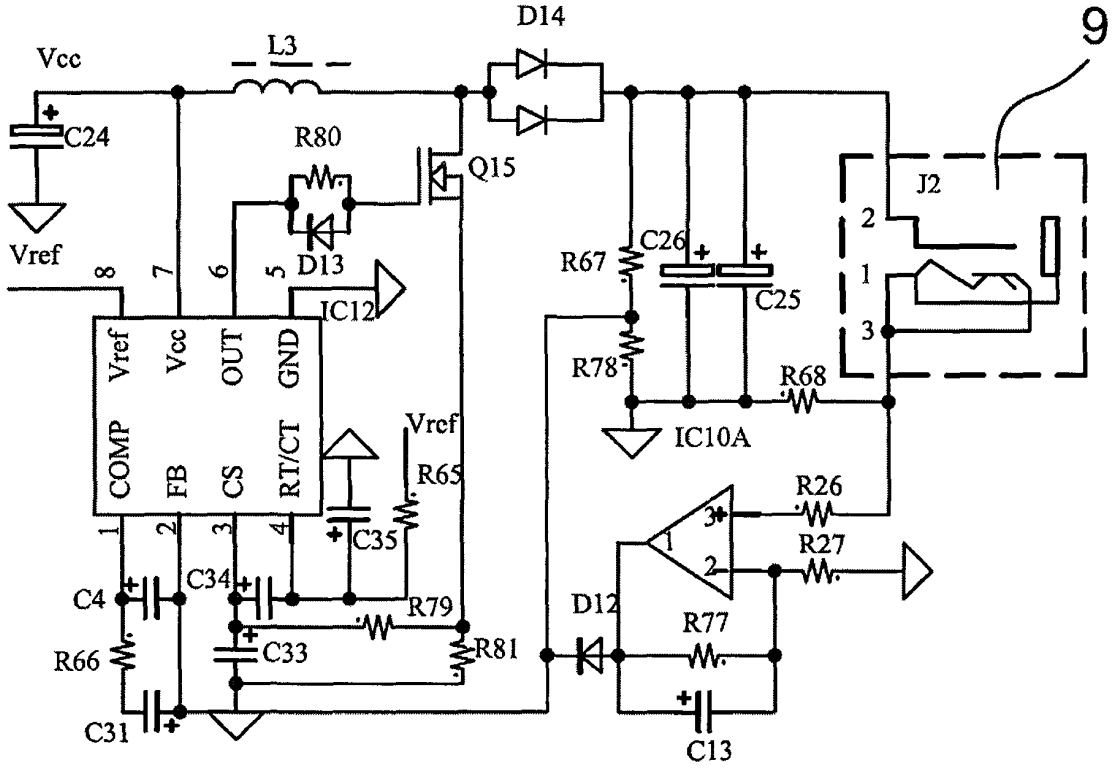
Vcc
L3
D14
9
C24
R80
Q15
J2
Vref
D13
R67
C26
C25
IC12
Vref
Vcc
OUT
GND
COMP
FB
CS
RT/CT
R78
R68
IC10A
Vref
R65
R26
R27
C35
C34
C4
R79
D12
R77
R66
C33
R81
C31
C13

Fig. 5

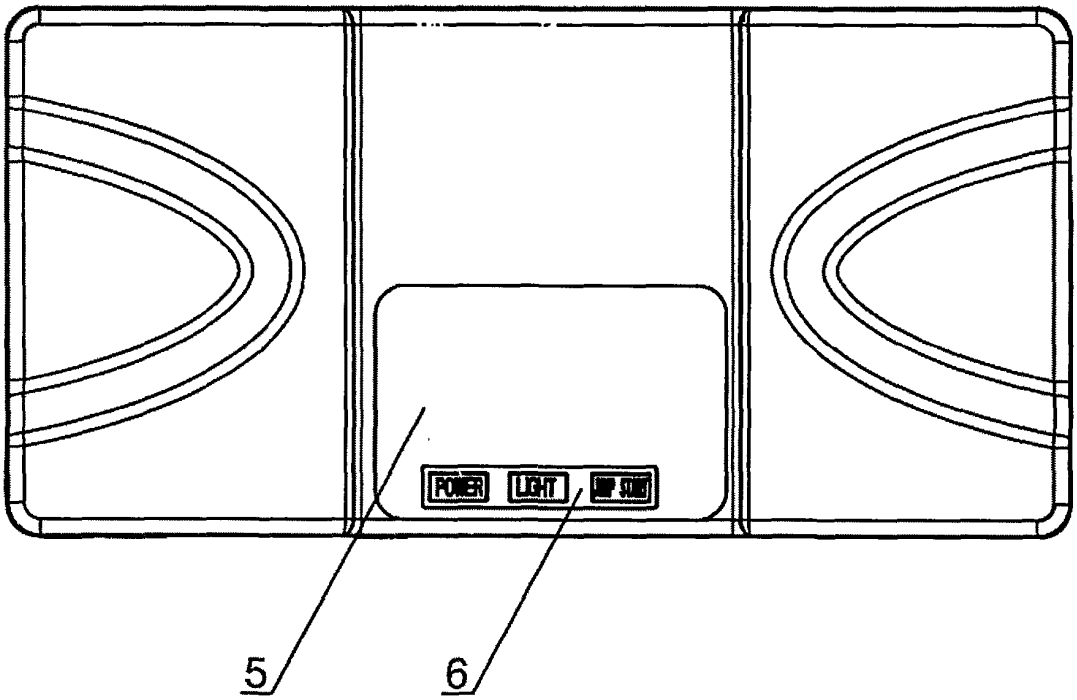
POWER
LIGHT
5
6

Fig. 6

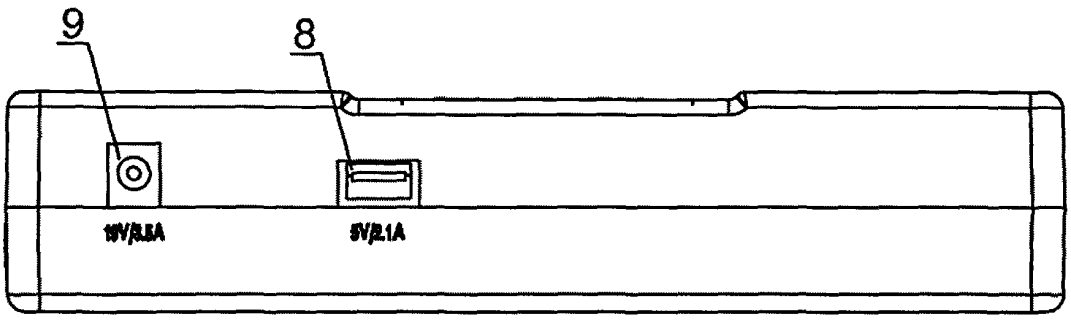

Fig. 7

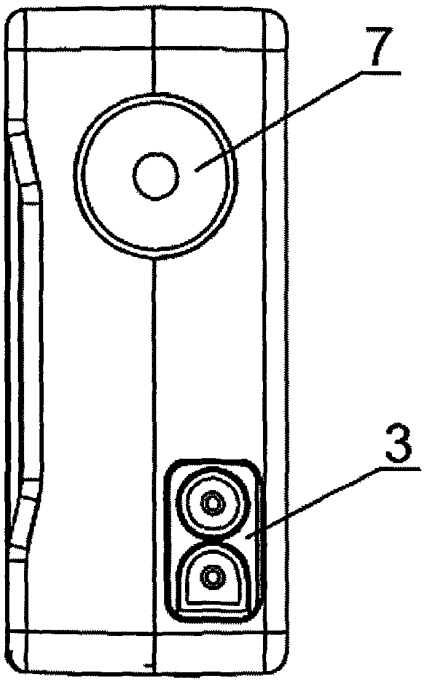

Fig.8

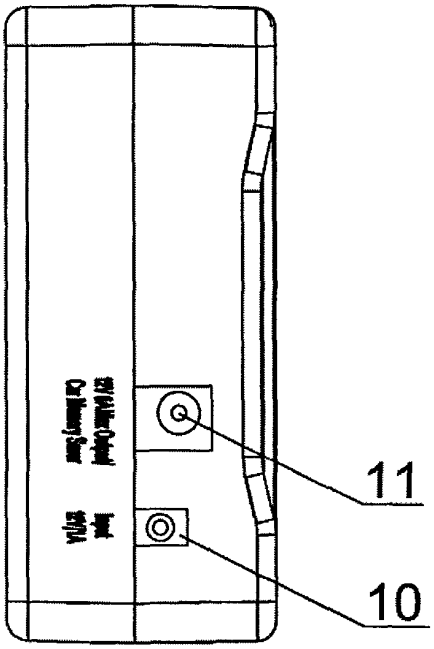

Fig.9

CERTIFICATE OF TRANSLATION ACCURACY

I, Joseph Schwartzman, declare:

1. I am a Translator at Transperfect Translations, Inc. and I specialize in translating Chinese to English.

2. I have a BA in Chinese from Vassar College and have been working as a linguist since 2012.

3. I submit this declaration to certify the accuracy of the English translation of the Chinese Utility Model Patent No. CN 203211234 U under 37 C.F.R. § 1.68.

4. My statements are based on personal knowledge of my review of the Chinese Utility Model Patent No. CN 203211234 U and its Chinese-to-English translation. If called as a witness about the facts contained in these statements, I could testify competently based on such personal knowledge and the investigation I have conducted.

5. All statements made herein of my own knowledge are true, and all statements made on information and belief are believed to be true. Further, I am aware that these statements are made with the knowledge that willful false statements and the like so made are punishable by fine or imprisonment, or both, under 18 U.S.C. § 1001. I declare under penalty of perjury that to the best of my knowledge, the foregoing is true and correct.

6. I also understand that by submitting this declaration I may be asked to appear for a deposition asking me questions limited to the material in my declaration. With my signature below, I agree to make reasonable efforts to make myself available for such a deposition at a reasonable place in the United States and time of my choosing.

I declare under penalty of perjury that the foregoing is true and correct to the best of my knowledge. Executed this 24th day of January 2024 in the Kings County of the State of New York.

Joseph Schwartzman

Sworn to before me this
January 24, 2024

Signature, Notary Public

Regina J. Brooks
Notary Public State of New York
No. 01BR6310577 Kings County
Comission Expires 08/25/2026

Stamp, Notary Public