[19] China National Intellectual Property Office

[51] Int. Cl.
H02J 7/00 (01/2006)
H02M 3/156 (01/2006)

[logo]

[12] **Specifications of Utility Model**

Patent No. ZL 200820094886.0

[45] **Authorized Publication** April 22, 2009

[11] **Publication No.** CN 201226449Y

[22] **Date of Application** June 16, 2008

[21] **Application No.** 200820094886.0

[73] **Patentee** BYD Co., Ltd.

Address No. 3001 Hengping Road, Pingshan Town, Longgang District, Shenzhen, Guangdong Province 518118

[72] **Inventor** Guangyue Zheng

[74] **Patent agency** Shenzhen ZYIP Professional IP Firm

Agent Quanwen Zhang

2 pages of Claims
7 pages of Specification
2 pages of Attached Drawings

[54] Title of Utility Model

BOOSTER TYPE CHARGING CONTROL CIRCUIT AND ELECTRONIC DEVICE

[57] Abstract

This utility model is applicable to the field of power supply, providing a booster type charging control circuit, which comprises: a boost converter circuit, a voltage sampling circuit, a current feedback circuit, a power management circuit, and a microcontroller. The power input of the microcontroller is connected to the output of the power management circuit; the voltage sampling terminal of the microcontroller is connected to the output of the voltage sampling circuit; and the current feedback terminal of the microcontroller is connected to the output of the current feedback circuit. This utility model adopts a microcontroller to precisely control the magnitude of the charging current output by the boost converter circuit, effectively protecting electronic devices and batteries, and thereby extending the lifespan of the electronic devices and their batteries.

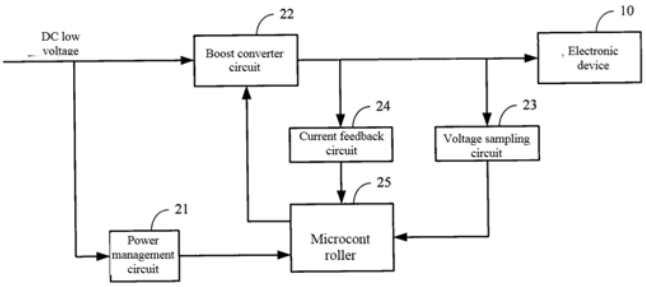

DELTRAN EX1021
IPR2024-01219

1. A booster type charging control circuit, characterized in that the booster type charging control circuit comprises:

a boost converter circuit, which outputs the input low voltage DC signal to the electronic device after boost conversion;

a voltage sampling circuit, with an input thereof being connected to the output of the boost converter circuit, and voltage signal feedback is output by the boost converter circuit;

a current feedback circuit, with an input thereof being connected to the output of the boost converter circuit, and current signal feedback is output by the boost converter circuit;

a power management circuit, which outputs the input low voltage DC signal after voltage regulation; and

a microcontroller, with a power input thereof being connected to the output of the power management circuit; a voltage sampling terminal thereof being connected to the output of the voltage sampling circuit, receiving the voltage feedback signal output by the voltage sampling circuit, and outputting a first control signal after processing, to control the magnitude of the charging current output by the boost converter circuit; a current feedback terminal thereof being connected to the output of the current feedback circuit, receiving the current signal feedback output by the current feedback circuit, and outputting a second control signal after processing, to control the charging current output by the boost converter circuit to a set current value.

2. A booster type charging control circuit according to claim 1, characterized in that: the boost converter circuit comprises:

an energy storage element;

a first triode that controls the operation of the energy storage element; and

a second triode that controls the operational state of the first triode;

therein, the energy storage element is connected between the input and the output of the boost converter circuit, the base of the first triode is connected to the input of the boost converter circuit, the collector of the first triode is connected to the output of the boost converter circuit, and the emitter of the first triode is grounded;

the base of the second triode is connected to the output of the microcontroller, the collector of the second triode is connected to the base of the first triode, and the emitter of the second triode is grounded.

3. A booster type charging control circuit according to claim 1, characterized in that: a reset terminal of the microcontroller is connected to a reset circuit.

DELTRAN EX1021
IPR2024-01219

4. A booster type charging control circuit according to claim 1, characterized in that: a frequency calibration terminal of the microcontroller is connected to a calibration resistor.

5. A booster type charging control circuit according to claim 1, characterized in that: the power input of the microcontroller is connected to a filter capacitor.

6. A booster type charging control circuit according to claim 1, characterized in that: the display control terminal of the microcontroller is connected to a display circuit.

7. A booster type charging control circuit according to claim 6, characterized in that: the display circuit comprises at least one LED wired to the display control terminal of the microcontroller.

8. A booster type charging control circuit according to claim 1, characterized in that: the power management circuit comprises:

a third triode, a voltage regulator, a first capacitor, a first resistor, a second resistor, a third resistor, and a fourth resistor;

therein, the output terminal of the voltage regulator is connected to the base of the third triode, the input of the voltage regulator is grounded, the adjustment terminal of the voltage regulator is grounded through the fourth resistor, the adjustment terminal of the voltage regulator is further connected to the emitter of the third triode through the third resistor, and the adjustment terminal is further connected to the collector of the third triode through the first capacitor and the second resistor;

the collector of the third triode is further connected to the input of the boost converter circuit through the first resistor, and the emitter of the third triode is connected to the power input of the microcontroller.

9. A booster type charging control circuit according to claim 8, characterized in that: the emitter of the third triode is grounded through a capacitor.

10. An electronic device using the booster type charging control circuit according to claim 1.

DELTRAN EX1021
IPR2024-01219

BOOSTER TYPE CHARGING CONTROL CIRCUIT AND ELECTRONIC DEVICE

Technical field

This utility model belongs to the field of power supply, and specifically relates to a booster type charging control circuit and electronic device.

Background art

With the popularization of computers, an increasing number of electronic devices can be charged through the 5V power output of a computer's USB interface. However, due to the low voltage of the 5V power supply, it cannot meet the charging needs of various electronic devices. Therefore, a booster type charging control circuit is widely used.

Figure 1 is a module structure diagram of a booster type charging control circuit provided by existing technology, comprising: a boost converter circuit 11, a voltage sampling circuit 12, a charging control circuit 13, a boost converter control circuit 14, and a current feedback circuit 15. The input of the boost converter circuit 11 is connected to the USB interface of the computer, and the low voltage DC output by the USB interface charges the electronic device 10 after the boost conversion under the control of the boost converter control circuit 14. At the same time, the charging control circuit 13 provides feedback to the boost converter control circuit 14 regarding the charging status of the battery in the electronic device 10 collected by the voltage sampling circuit 12; this further controls the magnitude of the charging current, thereby effectively protecting the battery in the electronic device 10 from damage. However, the booster type charging control circuit provided by the prior art directly charges electronic devices in abnormal conditions (such as low voltage due to over-discharge of batteries) with a large amount of current, which easily damages the electronic devices and their batteries and shortens the service life of electronic devices.

Summary of Utility Model

The objective of the present utility model is to provide a booster type charging control circuit, designed to solve the problem that booster type charging control circuits provided by the prior art cannot effectively protect electronic devices, resulting in a short service life of the electronic devices.

The present utility model is implemented in the following way: a booster type charging control circuit, comprising:

a boost converter circuit, which outputs the input low voltage DC signal to the electronic device after boost conversion;

a voltage sampling circuit, with an input thereof being connected to the output of the boost converter circuit, and voltage signal feedback output by the boost converter circuit;

a current feedback circuit, with an input thereof being connected to the output of the boost converter circuit, and current signal feedback output by the boost converter circuit;

a power management circuit, which outputs the input low voltage DC signal after voltage regulation; and

a microcontroller, with a power input thereof being connected to the output of the power management circuit; a voltage sampling terminal thereof being connected to the output of the voltage sampling circuit, receiving the voltage signal feedback output by the voltage sampling circuit, and outputting a first control signal after processing to control the magnitude of the charging current output by the boost converter circuit; a current feedback terminal thereof being connected to the output of the current feedback circuit, receiving the current signal feedback output by the current feedback circuit, and outputting a second control signal after processing to control the charging current output by the boost converter circuit to a set current value.

Another objective of the present utility model is to provide an electronic device for charging using the above-mentioned booster type charging control circuit.

The booster type charging control circuit provided by the present utility model uses a microcontroller to control the boost converter circuit. It detects the battery status in electronic devices through the voltage signal feedback from the voltage sampling circuit. For fully charged batteries, it promptly shuts off the charging current and supplemental charging is performed with a small current. For batteries with low voltage, it first performs pre-charging and then performs high-current charging when the battery voltage rises to a normal value. This precise and intelligent control ensures effective protection for electronic devices and batteries, thereby extending the lifespan of both the electronic devices and their batteries.

Brief Description of Attached Drawings

Figure 1 is a module structure diagram of a booster type charging control circuit provided by existing technology;

Figure 2 is a module structure diagram of a booster type charging control circuit provided by an embodiment of the present utility model;

Figure 3 is a circuit diagram of a booster type charging control circuit provided by an embodiment of the present utility model.

DELTRAN EX1021
IPR2024-01219

Specific embodiments

In order to make the objective, technical solution, and advantages of the present utility model clearer, the following detailed description is provided in conjunction with the accompanying drawings and embodiments. It should be understood that the specific embodiments described here are only used to explain this utility model, and are not intended to limit this utility model.

The booster type charging control circuit provided in the embodiments of the present utility model detects the battery status of the electronic device and the charging current feedback, and controls the magnitude of the charging current output by the boost converter circuit through a microcontroller, thereby effectively protecting the electronic device and the battery.

The booster type charging control circuit provided in the embodiments of the present utility model is mainly used in charging electronic devices. Its module structure is shown in Figure 2. For the sake of illustration, only the parts related to the present utility model are shown, as described in detail below.

The booster type charging control circuit comprises: a power management circuit 21, a boost converter circuit 22, a voltage sampling circuit 23, a current feedback circuit 24, and a microcontroller 25. Therein, the input of the power management circuit 21 and the boost converter circuit 22 are both connected to the USB interface of the computer. The power management circuit 21 outputs the low voltage DC output from the USB interface after voltage regulation to provide the operating voltage for the microcontroller 25. Under the control of the microcontroller 25, the boost converter circuit 22 converts the low voltage DC output from the USB interface into a boosted voltage to charge the electronic device 10.

The input of the voltage sampling circuit 23 is connected to the output of the boost converter circuit 22 to output the voltage signal feedback from the boost converter circuit 22.

The input of the current feedback circuit 24 is connected to the output of the boost converter circuit 22 to output the current signal feedback from the boost converter circuit 22.

The power input of the microcontroller 25 is connected to the output of the power management circuit 21 to receive the voltage signal output by the power management circuit 21; the voltage sampling terminal of the microcontroller is connected to the output of the voltage sampling circuit 23 to receive the voltage signal feedback from the voltage sampling circuit 23, and outputs a first control signal after processing to control the charging current output by the boost converter circuit 22; the current feedback terminal of the microcontroller is connected to the output of the current feedback circuit 24 to receive the current signal feedback from the current feedback circuit 24, and outputs a second control signal after processing to control the charge current output by the boost converter circuit 22 to a set current value, thereby producing a constant current for charging, which is more effective in protecting the electronic device 10.

Figure 3 shows a circuit diagram of a booster type charging control circuit provided by an embodiment of the present utility model. For ease of illustration, only parts related to the present utility model are shown, and the details are as follows in connection with Figure 2.

The power management circuit 21 regulates the input low voltage DC and then outputs the operating voltage for the microcontroller 25; under the control of the microcontroller 25, the boost converter circuit 22 boosts and converts the input low voltage DC to charge the electronic device 10; the status of the battery in the electronic device 10 is reported to the microcontroller 25 through the voltage sampling circuit 23, and the microcontroller 25 controls the magnitude of the charging current output by the boost converter circuit 22 by determining the status of the electronic device 10 battery; the current feedback circuit 24 then reports the magnitude of the charging current output to the microcontroller 25, and the charging current output by the boost converter circuit 22 is always controlled at the set value by the microcontroller 25, that is, a constant current for charging, to protect the electronic device 10 from being burned out.

Therein, the microcontroller 25 includes 20 pins; pin 1 is grounded; a calibration resistor R1 is connected between frequency calibration terminal pin 2 and 3; a reset circuit 251 is connected to reset terminal pin 4; a display circuit 252 is connected to the display control terminal pins 7 and 8; output terminal pin 13 is connected to the control terminal of the boost converter circuit 22; the current feedback terminal pin 14 is connected to the output of the current feedback circuit 24; the voltage sampling terminal pin 17 is connected to the output of the voltage sampling circuit 23; the power output pin 20 is connected to a filter capacitor C1; the other pins, 5, 6, 9, 10, 11, 12, 15, 16, 18, and 19 are left unconnected.

As an embodiment of the present utility model, the reset circuit 251 includes a resistor R2 and a capacitor C2. One end of the capacitor C2 is connected to the power input terminal pin 20 of the microcontroller 25 through the resistor R2, and is also connected to the reset terminal 4 of the microcontroller; the other end is grounded.

As another embodiment of the present utility model, the display circuit 252 includes at least one light emitting diode (LED) that is connected to the display control terminal of the microcontroller 25 through a resistor. Two LEDs are shown in the figure, wherein one end of LED1 is connected to the display control terminal pin 7 of the microcontroller 25 through the resistor R3, and the other end is grounded; one end of LED2 is connected to the display control terminal pin 8 of the microcontroller 25 through the resistor R4, and the other end is grounded.

In the embodiment of the present utility model, the boost converter circuit 22 includes: an energy storage element, a first triode Q1 that controls the operation of the energy storage element, and a second triode Q2 that drives the operating state of the first triode Q1; therein, the energy storage element is connected between the input and the output of the boost converter circuit 22, the base of the first triode Q1 is connected to the input of the boost converter circuit 22, the collector is connected to the output of the boost

DELTRAN EX1021
IPR2024-01219

converter circuit 22, and the emitter is grounded; the base of the second triode Q2 is connected to the output of the microcontroller 25, the collector is connected to the base of the first triode Q1, and the emitter is grounded. As an embodiment of the present utility model, the energy storage element includes a diode D1 and an inductor L1, and the diode D1 and inductor L1 are connected in series between the input and the output of the boost converter circuit 22.

As an embodiment of the present utility model, the boost converter circuit 22 further includes resistors R5, R6, R7, and a capacitor C3; one end of the resistor R5 is connected to the base of the first triode Q1, and the other end is grounded through the capacitor C3; one end of the resistor R6 is connected to the base of the second triode Q2, and the other end is connected to the output terminal pin 13 of the microcontroller; one end of the resistor R7 is connected to the base of the second triode Q2 and the other end is grounded.

In the embodiment of the present utility model, the voltage sampling circuit 23 includes resistors R8, R9, R10, and a capacitor C4. One end of resistor R8 is connected to the output of boost converter circuit 22, and the other end is grounded through the resistor R9, and the other end is also connected to the voltage sampling terminal pin 17 of the microcontroller through the resistor R10; one end of the capacitor C4 is connected to the voltage sampling terminal pin 17 of the microcontroller and the other end is grounded.

In the embodiment of the present utility model, the current feedback circuit 24 includes resistors R11, R12, and a capacitor C5. One end of the capacitor C5 is connected to the current feedback terminal pin 14 of the microcontroller and also connected to the output of the boost converter circuit 22 through the resistor R11, and the other end is grounded; one end of the resistor R12 is connected to the output of the boost converter circuit 22, and the other end is grounded.

In the embodiment of the present utility model, the power management circuit 21 includes a third triode Q3, a voltage regulator U1, a first capacitor C6, a first resistor R13, a second resistor R14, a third resistor R15, and a fourth resistor R16; the output terminal 1 of the voltage regulator U1 is connected to the base of the third triode Q3, the input terminal 2 is grounded, the adjustment terminal 3 is grounded through the fourth resistor R16, its adjustment terminal 3 is also connected to the emitter of the third triode Q3 through the third resistor R15, and its adjustment terminal 3 is also connected to the collector of the third triode Q3 through the first capacitor C6 and the second resistor R14; the collector of the third triode Q3 is also connected to the input terminal of the boost converter circuit 22 through the first resistor R13, and its emitter is connected to the power input terminal pin 20 of the microcontroller 25. As an embodiment of the present utility model, the power management circuit 21 further includes a capacitor C7, and the emitter of the third triode Q3 is also grounded through the capacitor C7.

The working principle of the booster type charging control circuit provided by the embodiment of the present utility model is described as follows: The power management circuit 21 regulates the input low voltage DC and provides the operating voltage to the microcontroller 25; the microcontroller 25 starts to operate, and under the control of its internal clock, the microcontroller 25 first receives the feedback voltage signal output by the voltage sampling circuit 23, then outputs the first control signal after processing, and controls the magnitude of the charging current output by the boost converter circuit 22; next, the microcontroller 25 receives the feedback current signal output by the current feedback circuit 24, outputs the second control signal after processing, and controls the charging current output by the boost converter circuit 22 to a set current value, thereby providing a constant current to charge the battery in the electronic device 10 and as indicated by the LED in the display circuit 252.

When the microcontroller 25 starts to operate, the voltage of the battery in the electronic device 10 is first sampled through the voltage sampling circuit 23, and the battery status is determined by the sampling voltage: (1) If it is detected that there is no battery, the microcontroller 25 does not output a control signal, the boost converter circuit 22 does not output a charging current, and the display circuit 252 indicates a status of no battery; (2) If it is detected that the voltage of the battery is lower than 1V, the microcontroller 25 outputs a first control signal to control the boost converter circuit 22 to output a small pulse current and pre-charge the battery until the voltage of the battery returns to normal; because the voltage of a normal battery is greater than 1V, if the battery is over-discharged or stored for an excessively long time, the voltage will be less than 1V. At this time, charging the battery with a large current will damage the battery or even be dangerous, and the battery needs to be pre-charged with a small pulse current to charge the voltage of the battery to more than 1V; (3) If it is detected that the voltage of the battery is normal, the microcontroller 25 outputs a first control signal to control the boost converter circuit 22 to output a large current for charging, and the indication state of the display circuit 252 is normal charging. When the battery is fully charged, the microcontroller 25 adjusts the output control signal to control the boost converter circuit 22 to output a supplemental charging current while the indication state of the display circuit 252 is fully charged.

When the voltage sampled by the voltage sampling circuit 23 satisfies any of the following conditions, the microcontroller 25 controls the boost converter circuit 22 to not output a charging current and ends charging. Condition 1: The battery voltage reaches the set maximum value; condition 2: the charging time reaches the set maximum value; condition 3: the voltage or charging time of the battery reaches the limit set according to the characteristics of the battery; condition 4: the negative change in battery voltage reaches the set value; therein the set value is based on the number of cells in the battery.

During charging, the current feedback circuit 24 reports the charging current output by the boost converter circuit 22 to the microcontroller 25, and the microcontroller 25 modulates the duty cycle of the second control signal output according to the reported charging current, thereby controlling the charging current output by the boost converter circuit 22 to a set current value, that is, a constant current for charging to protect the electronic device 10 and its battery from damage.

The booster type charging control circuit provided by the embodiment of the present utility model uses a microcontroller to control the boost converter circuit, detect the status of the battery in the electronic device through the voltage signal feedback from the voltage sampling circuit, to turn off the charging current in a timely manner, and to supplement the charging with a small current; for low voltage batteries, a pre-charge is performed first, and then the battery is charged with a large current when the voltage rises to a normal value; this precise and intelligent control effectively protects the electronic device and battery, thereby extending their service life while saving circuit costs.

The above description is only for the preferred embodiments of the present utility model and should not be used to limit the present utility model. Any modifications, equivalent substitutions, and improvements made within the spirit and principles of the present utility model should be included within the scope of protection of the present utility model.

DELTRAN EX1021
IPR2024-01219

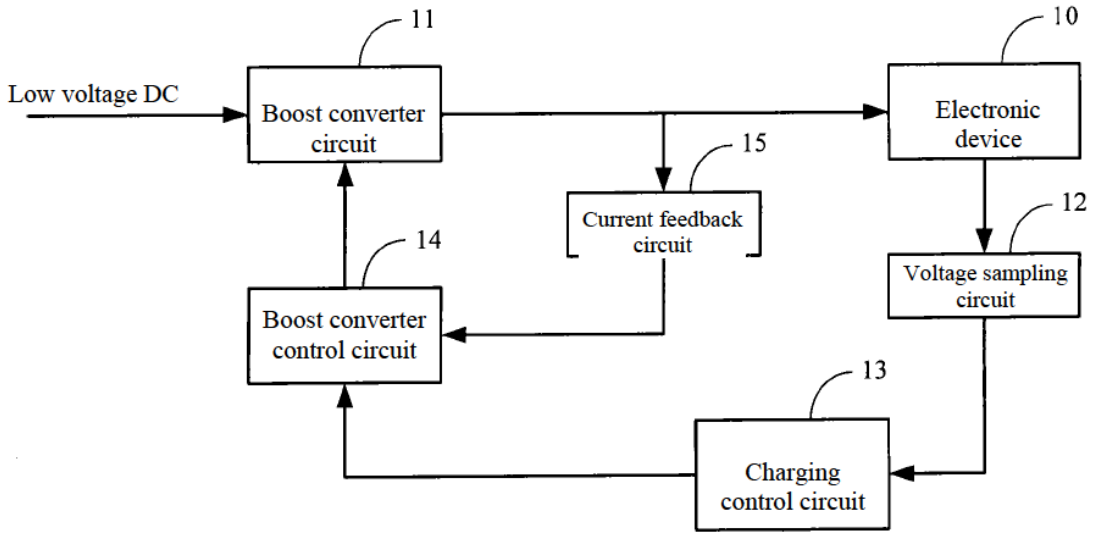

Figure 1

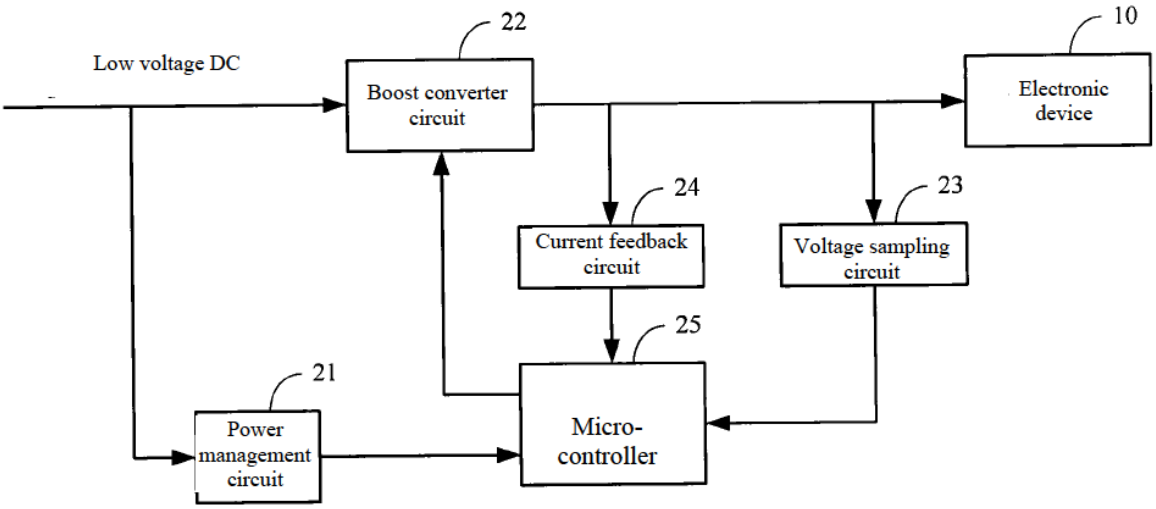

Figure 2

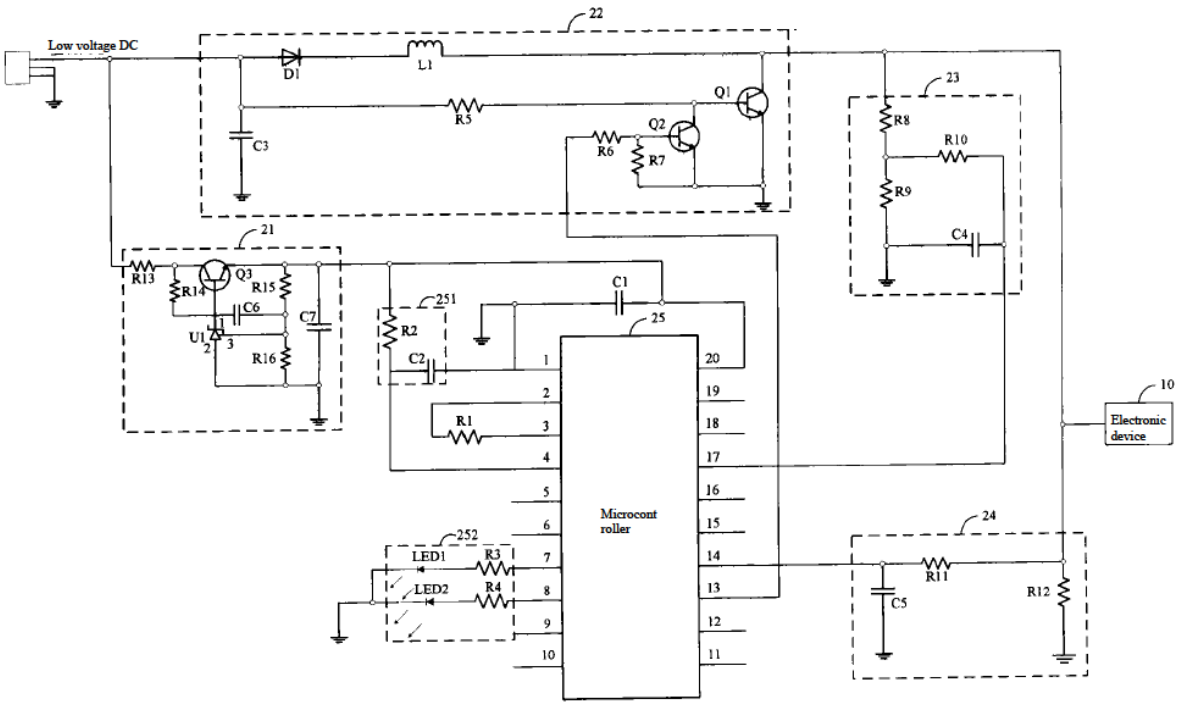
Low voltage DC
22
D1
L1
C3
R5
Q1
Q2
R6
R7
23
R8
R10
R9
C4
21
R13
R14
Q3
R15
C6
C7
U1
R16
251
R2
C2
C1
25
R1
Microcontroller
10
Electronic device
24
R11
C5
R12
252
LED1
R3
LED2
R4

Figure 3

CERTIFICATE OF TRANSLATION ACCURACY

I, Joseph Schwartzman, declare:

1. I am a Translator at Transperfect Translations, Inc. and I specialize in translating Chinese to English.

2. I have a BA in Chinese from Vassar College and have been working as a linguist since 2012.

3. I submit this declaration to certify the accuracy of the English translation of the Chinese Utility Model Patent No. CN 201226449 Y under 37 C.F.R. § 1.68.

4. My statements are based on personal knowledge of my review of the Chinese Utility Model Patent No. CN 201226449 Y and its Chinese-to-English translation. If called as a witness about the facts contained in these statements, I could testify competently based on such personal knowledge and the investigation I have conducted.

5. All statements made herein of my own knowledge are true, and all statements made on information and belief are believed to be true. Further, I am aware that these statements are made with the knowledge that willful false statements and the like so made are punishable by fine or imprisonment, or both, under 18 U.S.C. § 1001. I declare under penalty of perjury that to the best of my knowledge, the foregoing is true and correct.

6. I also understand that by submitting this declaration I may be asked to appear for a deposition asking me questions limited to the material in my declaration. With my signature below, I agree to make reasonable efforts to make myself available for such a deposition at a reasonable place in the United States and time of my choosing.

I declare under penalty of perjury that the foregoing is true and correct to the best of my knowledge. Executed this 1st day of February 2024 in the Kings County of the State of New York.

Joseph Schwartzman

Sworn to before me this
February 1, 2024

Signature, Notary Public

Regina J. Brooks
Notary Public State of New York
No. 01BR6310577 Kings County
Commission Expires 08/25/2026

Regina J. Brooks
Notary Public State of New York
No. 01BR6310577 Kings County
Commission Expires 08/25/2026

Stamp, Notary Public