(19) China National Intellectual Property Administration

[logo]

(12) Utility Model Patent

(10) Authorization announcement number CN 203788026 U
(45) Authorization publication date 20Aug2014

(21) **Application No.** 201420192757.0
(22) **Application date** 04/18/2014
(73) **Patentee** Wang Chunlai
Address Rooms 511-512, 5/F, No. 3 Integrated Office Building, Xinghui Science and Technology Industrial Park, West Huaning Road, Dalang Community, Dalang Street, Longhua New District, Shenzhen, Guangdong Province, 518000
(72) Inventor Wang Chunlai
(74) **Patent agency** Shenzhen Zhongyi Patent and Trademark Firm 44237
Agent Zhang Quanwen
(51) Int. Cl.
H02J 7/00 (2006.01)

Claims 1 Page
Specification 3 Pages
Attached drawings 1 Page

(54) Name of utility model

Emergency automotive starter power supply

(57) Abstract

The present utility model belongs to the field of mobile power supply, and in particular relates to an emergency automotive starter power supply. It includes a circuit board, a battery pack connected to the circuit board, and an output interface for the emergency starting of automobiles connected to the battery pack. The emergency automotive starter power supply further comprises: a voltage booster circuit, and the input end of said voltage booster circuit uses a USB interface for charging input, while the output end of the voltage booster circuit is connected to the circuit board, or, the voltage booster circuit is integrated on the circuit board as a module. The emergency automotive starter power supply charges via the USB interface and can accommodate a variety of chargers that use the USB power supply specification for charging. Through the USB interface, the user can even charge the emergency automotive starter power supply using a common universal mobile communication device charger, without carrying other types of chargers, so as to facilitate user use.

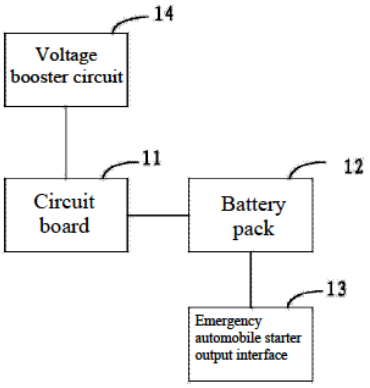

CN 203788026 U

DELTRAN EX1023
IPR2024-01219

1. The emergency automotive starter power supply includes a circuit board, a battery pack connected to the circuit board, and an emergency automotive starter output interface connected to the battery pack, characterized in that the emergency automotive starter power supply further comprises:

a voltage booster circuit, and the input connection of the voltage booster circuit uses a USB interface for charging input, while the output connection of the said voltage booster circuit is connected to the circuit board, or, the voltage booster circuit is integrated on the circuit board as a module.

2. An emergency automotive starter power supply as stated in Claim 1, characterized in that the USB input interface of the voltage booster circuit comprises: a Type A USB interface, Type B USB interface, Micro USB interface, Mini USB interface, and Type C USB interface.

3. An emergency automotive starter power supply as stated in Claim 1, characterized in that the input connection of the voltage booster circuit uses charging current input greater than or equal to 4.375V.

4. An emergency automotive starter power supply as stated in Claim 1, characterized in that the output terminal of the said voltage booster circuit outputs charging current of 10V to 30V.

5. An emergency automotive starter power supply as stated in Claim 1, characterized in that the said circuit board is further connected to a USB charging output interface.

6. An emergency automotive starter power supply as stated in Claim 1, characterized in that the said circuit board is further connected to a power indicator light.

7. An emergency automotive starter power supply as stated in Claim 1, characterized in that the said circuit board is further connected to an LED light.

An emergency automotive starter power supply

Technical Field

[0001] The present utility model belongs to the field of mobile power supply, and in particular relates to an emergency automotive starter power supply.

Background Art

[0002] With the development of the automobile industry, the demand for emergency automotive starter power supplies is also increasing. Generally, an automobile's internal battery uses 12V or 24V to start the automobile. The emergency automotive starter power supply also maintains the same voltage as the vehicle's internal battery, 12V or 24V, in order to match the internal battery. The input voltage used to charge the emergency automotive starter power supply is also 12V or 24V or slightly higher. Therefore, the emergency automotive starter power supply must be equipped with a charger of 12V or 24V or higher. As the charger is a specialized charger, if this specialized charger is not present and the emergency automotive starter power supply is out of power, the emergency automotive starter power supply cannot be charged for use. This affects the range of use of the emergency automotive starter power supply.

Utility Model Content

[0003] The embodiment of the present utility model provide an emergency automotive starter power supply, aiming to provide an emergency automotive starter power supply that can be charged through a USB interface. It can accept charging using a charger designed in compliance with the USB power supply specification. It accepts 5V current input at minimum that complies with the USB power supply specification. When the emergency automotive starter power supply is out of power and the user does is not carrying a specialized charger, the user can charge the emergency automotive starter power supply using a common universal mobile communication device charger through the USB interface, so as to facilitate user use.

[0004] The embodiment of the utility model is implemented in the following way: an emergency automotive starter power supply that includes a circuit board, a battery pack connected to the circuit board, and an emergency automotive starter output interface connected to the battery pack, characterized in that the emergency automotive starter power supply further comprises:

[0005] A voltage booster circuit, where the input connection of the voltage booster circuit uses a USB interface for charging input, while the output connection of the said voltage booster circuit is connected to the circuit board, or, the voltage booster circuit is integrated on the circuit board as a module.

[0006] The USB input interface of the said voltage booster circuit comprises: a type A USB interface, type B USB interface,

[0007] Micro USB interface, mini USB interface, and type C USB interface.

[0008] The input connection of the voltage booster circuit uses charging current input greater than or equal to 4.375V.

[0009] The output terminal of the voltage booster circuit outputs charging current of 10V to 30V.

[0010] The said circuit board is further connected to a USB charging output interface.

[0011] The said circuit board is further connected to a power indicator light.

[0012] The said circuit board is further connected to an LED light.

[0013] An embodiment of the present utility model is an emergency automotive starter power supply, which provides a voltage booster circuit on the emergency automotive starter power supply. The input connection of the voltage booster circuit is a USB interface. Since the output voltages of universal chargers for common cell phones and various mobile devices are all low voltage USB interface connections. The use of the emergency automotive starter power supply in the present application can enable users to charge the emergency automotive starter power supply using universal chargers for common mobile communication devices. There is no need for specialized chargers previously used for emergency automotive starter power supplies, greatly improving portability of the emergency automotive starter power supply and extending its range of use.

Description of Attached Drawings

[0014] Figure 1 is a structural diagram of the emergency automotive starter power supply provided by the embodiment of the present utility model.

Specific Embodiments

[0015] In order to make the purpose, technical solutions, and advantages of the present utility model more clear, the present utility model is further explained in detail below in combination with the attached drawings and embodiments. It should be understood that the specific embodiments described herein are only used to explain the present utility model, and are not used to restrict the present utility model.

[0016] The embodiment of the present utility model provides an emergency automotive starter power supply, wherein the emergency automotive starter power supply comprises a circuit board 11, a battery pack 12 connected to the circuit board, an emergency automotive starter output interface 13 connected to the battery pack, and a voltage booster circuit 14 connected to the circuit board, where the voltage booster circuit can also be integrated on the circuit board as a separate module. The battery pack of the emergency automotive starter power supply is connected to the emergency automotive starter output interface; in particular, the automobile ignition interface can be 12V or 24V. The circuit board of the emergency automotive starter power supply comprises common input and output interfaces, for example, the power input interface that matches the voltage of the emergency automotive starter power supply. The power supply input interface is specifically determined according to the voltage of the emergency automotive starter power supply. Generally, the emergency automotive starter power supply is 12V or 24V. Correspondingly, the circuit board is configured with a power input interface of 12V or 24V to charge the battery pack of the emergency automotive starter power supply. At the same time, in order to ensure normal operation of the emergency automotive starter power supply, the circuit board of the emergency automotive starter power supply controls the input and output interfaces connected to the circuit board. The output connection of the voltage booster circuit is connected to the circuit board. The voltage booster circuit output connection uses 10V to 30V based on the voltage characteristics of the emergency automotive starter power supply. The input connection of the voltage booster circuit uses a USB interface, wherein the USB interface can be Type A USB interface, Type B USB interface, Micro USB interface, mini USB interface, Type C USB interface, or other type of USB interface. Other types of USB interfaces include other types developed by the USB standardization organization. In particular, it can be one or more. The USB interface is preferred to be a Micro USB interface. Since the Micro USB interface is commonly used for smartphones and tablets, the Micro USB interface chargers of the current common smart devices can be used to charge the emergency automotive starter power supply. In particular, the current of the charging input of the USB interface can be 4.375V or higher. Preferably, 5V operating voltage, compliant with USB power supply specification, can be used for charging. Due to the low power of the chargers of some smart devices, in order to ensure reliable charging of the emergency automotive starter power supply, under-power input protection can also be added to the circuit board to ensure that the emergency automotive starter power supply can be charged and discharged normally. At the same time, in order to ensure normal use and safety of the emergency automotive starter power supply, a housing needs to be installed for the emergency automotive starter power supply. Additionally, in order to expand the range of use of the emergency automotive starter power supply, corresponding output interfaces and devices can also be configured for the emergency automotive starter power supply, for example, a configuration with an output interface for USB charging and LED light for the emergency automotive starter power supply. Therein the output interface for USB charging and LED light can be implemented directly by connecting to the circuit board of the emergency automotive starter power supply. For user-friendly access to the battery level of the emergency automotive starter power supply, a battery indicator light can also be connected to the circuit board of the emergency automotive starter power supply, displaying the battery level of the battery pack of the emergency automotive starter power supply.

[0017] The present utility model provides an emergency automotive starter power supply configured with a USB charging interface. The emergency automotive starter power supply can be charged using a charger of commonly used smart devices. The USB charging interface of the emergency automotive starter power supply receives the charging input and the voltage booster circuit boosts the voltage to the 10V to 30V normally used by the emergency automotive starter power supply for charging the emergency automotive starter power supply. This avoids the need to configure a specialized charger separately when charging the emergency automotive starter power supply, improving convenience of charging the emergency automotive starter power supply, and enhancing portability of the emergency automotive starter power supply. This greatly increases the range of use of the emergency automotive starter power supply, making it easier for users to use the emergency automotive starter power supply.

[0018] The above descriptions are only preferred embodiments of the present utility model, and are not intended to limit the present utility model.

DELTRAN EX1023
IPR2024-01219

Any modifications, equivalent replacements, and improvements made within the spirit and principles of the present utility model shall be included in the scope of protection of the present utility model.

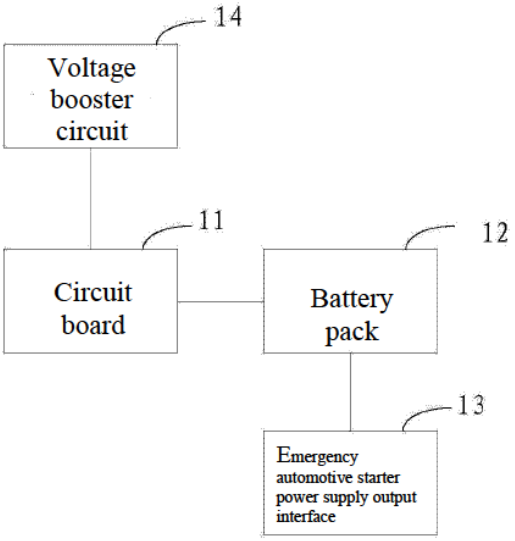
14
Voltage booster circuit
11
Circuit board
12
Battery pack
13
Emergency automotive starter power supply output interface

Figure 1

CERTIFICATE OF TRANSLATION ACCURACY

I, Joseph Schwartzman, declare:

1. I am a Translator at Transperfect Translations, Inc. and I specialize in translating Chinese to English.

2. I have a BA in Chinese from Vassar College and have been working as a linguist since 2012.

3. I submit this declaration to certify the accuracy of the English translation of the Chinese Utility Model Patent No. CN 203788026 U under 37 C.F.R. § 1.68.

4. My statements are based on personal knowledge of my review of the Chinese Utility Model Patent No. CN 203788026 U and its Chinese-to-English translation. If called as a witness about the facts contained in these statements, I could testify competently based on such personal knowledge and the investigation I have conducted.

5. All statements made herein of my own knowledge are true, and all statements made on information and belief are believed to be true. Further, I am aware that these statements are made with the knowledge that willful false statements and the like so made are punishable by fine or imprisonment, or both, under 18 U.S.C. § 1001. I declare under penalty of perjury that to the best of my knowledge, the foregoing is true and correct.

6. I also understand that by submitting this declaration I may be asked to appear for a deposition asking me questions limited to the material in my declaration. With my signature below, I agree to make reasonable efforts to make myself available for such a deposition at a reasonable place in the United States and time of my choosing.

I declare under penalty of perjury that the foregoing is true and correct to the best of my knowledge. Executed this 31st day of January 2024 in the Kings County of the State of New York.

Joseph Schwartzman

Sworn to before me this
January 31, 2024

Signature, Notary Public

Regina J. Brooks
Notary Public State of New York
No. 01BR6310577 Kings County
Comission Expires 08/25/2026

Stamp, Notary Public