Exhibit D

Battery Charging Specification

Revision 1.0

Mar 8, 2007

USBIF000001

DELTRAN EX1025
IPR2024-01219

Revision History

Revision	Issue Date	Comment
1.0	03/08/2007	Initial release.

USBIF000002

DELTRAN EX1025
IPR2024-01219

Table of Contents

1. Introduction 1
- 1.1 Scope 1
- 1.2 Background 1
- 1.3 Definition of Terms 1
  - 1.3.1 Attach versus Connect 1
  - 1.3.2 Host or Hub 2
  - 1.3.3 Dedicated Charger 2
  - 1.3.4 Host Charger 2
  - 1.3.5 Hub Charger 2
  - 1.3.6 USB Charger 2
  - 1.3.7 Portable Device 2
  - 1.3.8 Dead Battery Threshold 2
  - 1.3.9 Weak Battery Threshold 2
- 1.4 Parameter Values 3

2. Dead Battery Provision 3
- 2.1 Background 3
- 2.2 Provision Conditions 3
  - 2.2.1 Compliance Testing 3
  - 2.2.2 No Battery Case 3
  - 2.2.3 Dead Battery – No Connect 3
  - 2.2.4 Dead Battery – With Connect 4
  - 2.2.5 Current Usage – Direct Power Up 4
  - 2.2.6 Current Usage – Battery Charging 4
  - 2.2.7 Current Usage – Unrelated Modes 4
  - 2.2.8 Inrush Tests 4
  - 2.2.9 Drawing Current After Connect 4
  - 2.2.10 Disconnect Before Using Provision 4
  - 2.2.11 Specify Connect Times 4
- 2.3 Current Limit Waveforms 5
  - 2.3.1 Good Battery 5
  - 2.3.2 Dead Battery – No Connect 6
  - 2.3.3 Dead Battery – With Connect 7
- 2.4 OTG Considerations 7

3. Detection Mechanism 8
- 3.1 Overview 8
- 3.2 Dedicated Charger 9
- 3.3 Host or Hub 10
- 3.4 Host Charger or Hub Charger 11
- 3.5 Charging Current Limits 12
- 3.6 Ground Current and Noise Margins 12
  - 3.6.1 Low-speed and Full-speed Communication 12
  - 3.6.2 Hi-speed Communication 12
  - 3.6.3 Low-speed Connect 13
- 3.7 Charger Detection Timing 13
- 3.8 Example Implementation 15
- 3.9 Signal Integrity 16
- 3.10 Resistive Detection Mechanism 16

USBIF000003

DELTRAN EX1025
IPR2024-01219

4. Charging Specifications 19
4.1 USB Charger 19
4.2 Portable Devices 20
5. Parameter Values 23

Figures

Figure 2-1 Good Battery 5
Figure 2-2 Dead Battery – No Connect 6
Figure 2-3 Dead Battery – With Connect 7
Figure 3-1 System Overview 8
Figure 3-2 Dedicated Charger 9
Figure 3-3 Host or Hub 10
Figure 3-4 Host Charger or Hub Charger 11
Figure 3-5 Charger Detection Timing 14
Figure 3-6 Example Implementation 16
Figure 3-7 Resistive Detection – Dedicated Charger 17
Figure 3-8 Resistive Detection – Host 18
Figure 4-1 Charger Voltage versus Current 20
Figure 4-2 Portable Device Current from Dedicated Charger 21
Figure 4-3 Portable Device Current from Host Charger 22
Figure 4-4 Current Limiting Example 23

Tables

Table 5-1 Voltages 23
Table 5-2 Currents 24
Table 5-3 Resistances 24
Table 5-4 Times 25

Acronyms

PC	Personal Computer
PHY	Physical Layer Interface for High Speed USB
SOF	Start of Frame
TPL	Targetted Peripheral List
USB	Universal Serial Bus
USB-IF	USB Implementers Forum
VBUS	Voltage line of the USB interface

USBIF000004

DELTRAN EX1025
IPR2024-01219

1. Introduction

1.1 Scope

The Battery Charging Working Group is chartered with creating specifications that define limits as well as detection, control and reporting mechanisms to permit devices to draw current in excess of the USB 2.0 specification for charging and/or powering up from dedicated chargers, hosts, hubs, host chargers and hub chargers. These mechanisms will be backward compatible with USB 2.0 compliant hosts and peripherals.

1.2 Background

The USB port on personal computers is a convenient place for portable devices to draw current for charging their batteries. This convenience has led to the creation of dedicated chargers that simply expose a downstream USB port. This allows portable devices to use the same USB cable to charge from either a PC or from a dedicated charger.

If a portable device is attached to a USB host or hub, then the USB 2.0 spec requires that:

- after connecting, a portable device must draw less than:
  - 2.5mA average if the bus is suspended
  - 100mA max if bus is not suspended and not configured
  - 500mA max if bus is not suspended and configured for 500mA

If a portable device is attached to a dedicated charger, it is allowed to draw a current of I_{DEV_DCHGR}. If a portable device is attached to a host or hub charger, it is allowed to draw a current of $I_{DEV_HCHGR_LFS}$ or $I_{DEV_HCHGR_HS}$, regardless of suspend.

In order for a portable device determine how much current it is allowed to draw from an upstream USB port, there needs to be mechanisms that allow the portable device to distinguish between a host or hub and a USB charger. This specification defines just such a mechanism.

Since portable devices can be connected to USB chargers from various manufacturers, it is important that all USB chargers behave the same way. This specification defines the requirements for a USB charger. USB chargers that meet these requirements and pass the associated compliance tests are eligible to be added to the USB-IF Integrators List.

If a portable device has a dead or weak battery, then the Dead Battery Provision issued by the USB-IF allows that device to draw up to 100mA until the device is able to connect. The conditions associated with the Dead Battery Provision are contained in this specification.

1.3 Definition of Terms

This section contains definitions for some of the terms used in this specification.

1.3.1 Attach versus Connect

This specification makes a distinction between the words “attach” and “connect”. A downstream device is considered to be attached to an upstream device when there is a physical cable between the two.

A downstream device is considered to be connected to an upstream device when it is attached to the upstream device, and when the downstream device has pulled either the D+ or D- data line high through a 1.5kohm resistor, in order to enter low-speed, full-speed or hi-speed signaling.

1.3.2 Host or Hub

A host or hub is a device that complies with the USB 2.0 definition of a host or hub. A host or hub expects a downstream device to draw less than 2.5mA average when unconnected or suspended, up to 100mA max when connected and not suspended, and up to 500mA max if so configured and not suspended. A downstream device can be enumerated when it is connected to an upstream host or hub.

A host or hub pulls the D+ and D- lines to ground through a 15k (typical) resistor.

1.3.3 Dedicated Charger

For the purposes of this specification, a dedicated charger is defined as follows.

A dedicated charger outputs power through a USB connector, but is not capable of enumerating a downstream device. A dedicated charger is required to output at a minimum current of I_{DCHGR} at a voltage of V_{CHGR}.

A dedicated charger is required to short the D+ line to the D- line.

1.3.4 Host Charger

A host charger is a device that complies with the USB 2.0 definition of a host, except that it is required to output a current of I_{HCHGR} from V_{BUS} at any time.

A host charger outputs a voltage of V_{DAT_SRC} on its D- line when it senses a voltage greater that V_{DAT_REF} on its D+ line.

1.3.5 Hub Charger

A hub charger is a device that complies with the USB 2.0 definition of a hub, except that it is required to output a current of I_{HCHGR} from V_{BUS} at any time.

A hub charger outputs a voltage of V_{DAT_SRC} on its D- line when it senses a voltage greater that V_{DAT_REF} on its D+ line.

1.3.6 USB Charger

A USB charger is either a dedicated charger, host charger or hub charger.

1.3.7 Portable Device

A portable device is considered to be any USB device that is capable of operating from its own battery. This includes battery powered USB peripherals, and battery powered OTG devices.

1.3.8 Dead Battery Threshold

The *dead battery threshold* is defined as the maximum charge level of a battery such that below this threshold, a device is assured of not being able to power up successfully.

A *dead battery* is defined as one that is below the dead battery threshold.

1.3.9 Weak Battery Threshold

The *weak battery threshold* is defined as the minimum charge level of a battery such that above this threshold, a device is assured of being able to power up successfully.

USBIF000006

DELTRAN EX1025
IPR2024-01219

A *weak battery* is defined as one that is above the dead battery threshold and below the weak battery threshold. A device with a weak battery may or may not be able to power up a device successfully.

1.4 Parameter Values

Parameter names are used throughout the paper, instead of parameter values. All parameter values are found in Section 5.

2. Dead Battery Provision

2.1 Background

The USB 2.0 spec allows a downstream device to draw a suspend current of up to 2.5mA average before the device is connected. After a device is connected, the USB 2.0 spec allows the device to draw up to 2.5mA average, 100mA max, or 500mA max, depending on the configuration the host enables, and whether or not the bus is suspended.

This limit of only 2.5mA average before connect can be problematic for portable devices with a dead or weak battery. Some portable devices require more than 100mA for several seconds just to power up. Thus, some portable devices with dead or weak batteries may not be able to power up when attached to a host or hub if they can only draw 2.5mA average before being connected.

2.2 Provision Conditions

Portable devices that draw current in excess of the amount specified in the USB 2.0 spec from a hub or host may still be certified, providing they meet the conditions specified below. These conditions are in addition to the compliance tests required for all devices.

2.2.1 Compliance Testing

When submitting devices for compliance testing that use the Dead Battery Provision, the vendor shall provide a dead battery for the tests, and shall declare whether or not the device should be tested with no battery.

2.2.2 No Battery Case

Portable devices that do not have battery installed may also use the Dead Battery Provision, provided they meet the following requirements:

- if a good battery were installed, the portable device would be able to run off of battery power
- the case where the battery is not installed is an exceptional use case for this device, and not likely to occur very often, if at all

Bus powered devices that don't normally have a battery are not eligible to use the Dead Battery Provision. Examples of such devices would include a bus powered hub, bus powered printer or bus powered mouse.

2.2.3 Dead Battery – No Connect

Any USB device is allowed to draw up to 2.5mA average for an unlimited amount of time from an upstream USB port before connecting.

In addition to this, a device with a dead, weak or no battery is allowed to draw up to 100mA for up to 100ms sometime after attaching, in order to determine if it will likely be able to connect. If, after this time, the device

determines that it definitely will not be able to connect, then the device shall reduce its current draw to less than 2.5mA average. See Section 2.3.2.

2.2.4 Dead Battery – With Connect

A device with a dead, weak or no battery is allowed to draw up to 100mA max for more than 100ms after attaching, providing it uses this current to power on and connect. See Section 2.3.3.

2.2.5 Current Usage – Direct Power Up

If a portable device is able to power up and connect with less than 100mA, then such a device with a dead or weak battery is allowed to use the current from a host or hub to power up directly, without charging its battery.

2.2.6 Current Usage – Battery Charging

If a portable device is not able to power up and connect with less than 100mA, then such a device with a dead or weak battery is allowed to use the 100mA from the host to first charge its battery to its weak battery threshold. Upon reaching its weak battery threshold, the device is immediately required to power up and connect.

2.2.7 Current Usage – Unrelated Modes

The portable device is not allowed to delay connecting in order to go into modes that are unrelated to powering up and connecting. Such modes might include, but are not limited to:

- charging the battery beyond the weak battery threshold
- making a phone call
- playing a game, song or video
- establishing a wireless connection such as Bluetooth or WiFi or GPS

2.2.8 Inrush Tests

A device with a dead, weak or no battery shall pass inrush tests.

2.2.9 Drawing Current After Connect

After a device with a dead, weak or no battery connects, it is allowed to draw up to 100mA for 500ms or until the first SOF or keep-alive. After the first of these events, the device is required to comply with the USB spec rules for going into suspend.

2.2.10 Disconnect Before Using Provision

A device is only allowed to start drawing current in excess of the USB spec under the Dead Battery Provision when it is disconnected. If a device is connected to a suspended host and its battery discharges such that the device can no longer run from battery power, then the device is required to first disconnect before starting to draw current using the Dead Battery Provision.

2.2.11 Specify Connect Times

When applying to use the Dead Battery Provision for a portable device, the vendor shall specify both the typical and maximum times that a device with a dead, weak or no battery will take to connect after being attached to a USB host port. These attach to connect times shall assume a new battery and room temperature.

USBIF000008

DELTRAN EX1025
IPR2024-01219

2.3 Current Limit Waveforms

2.3.1 Good Battery

Figure 2-1 shows the current limit waveform for a device with a good battery, as specified in the USB 2.0 spec.

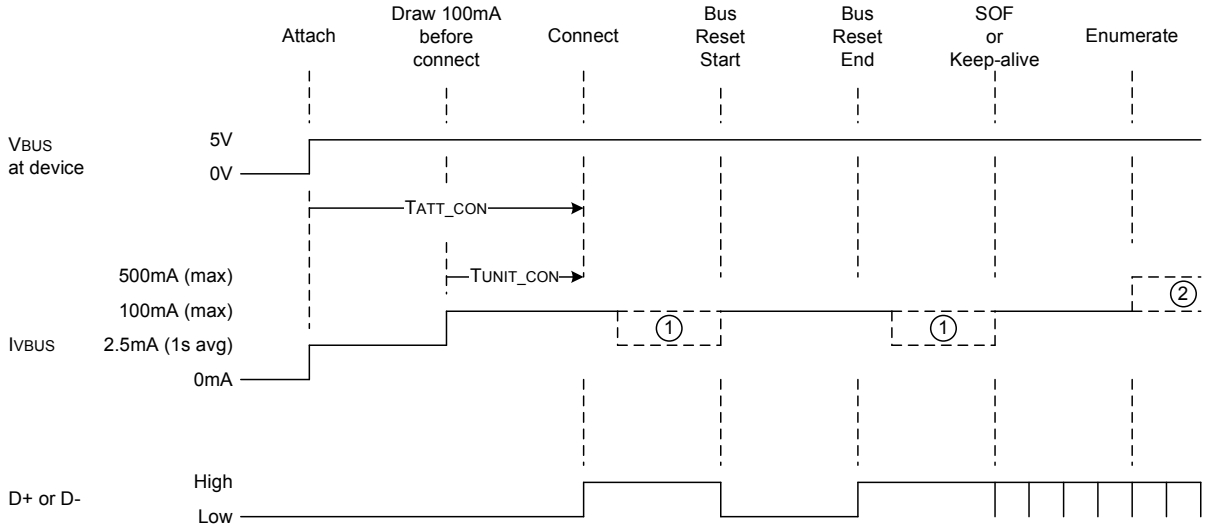

Figure 2-1 Good Battery

Notes:
1) Drop to suspend current if no bus activity for 3ms.
2) Increase current draw above 100mA if so configured by host.

From the time a device with a good battery attaches, until T_{UNIT_CON} before it connects, the device is allowed to draw up to 2.5mA average. During T_{UNIT_CON}, a device with a good battery is allowed to draw up to one unit load, or 100mA max.

The USB spec places no maximum limit on the duration of T_{ATT_CON}.

5
USBIF000009

DELTRAN EX1025
IPR2024-01219

2.3.2 Dead Battery – No Connect

Figure 2-2 shows the current limit waveform allowed by the Dead Battery Provision for a device that after attaching, determines that it will not be able to connect.

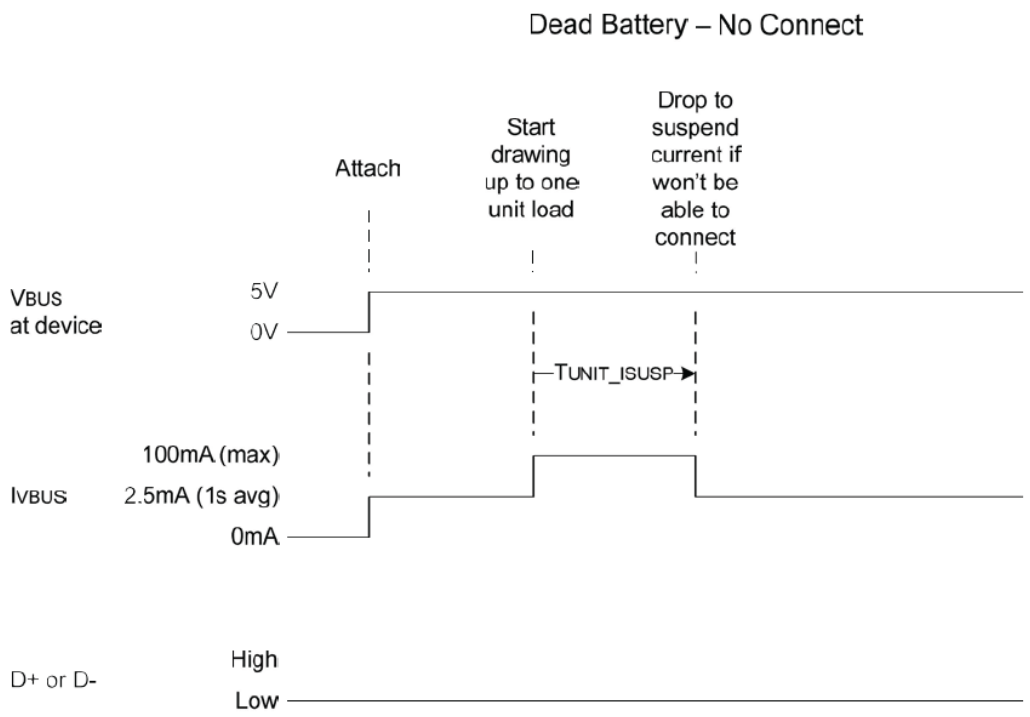

Figure 2-2 Dead Battery – No Connect

A device with a dead, weak or no battery is allowed to draw up to 100mA max for up to TUNIT_ISUSP after starting to draw more than 2.5mA, in order to determine if it will be able to connect. If the device determines that it will not be able to connect, then the device is required to reduce its current draw to 2.5mA average after TUNIT_ISUSP.

USBIF000010

DELTRAN EX1025
IPR2024-01219

2.3.3 Dead Battery – With Connect

Figure 2-3 shows the current limit waveform allowed by the Dead Battery Provision for a device with a dead, weak or no battery that doesn't receive an SOF.

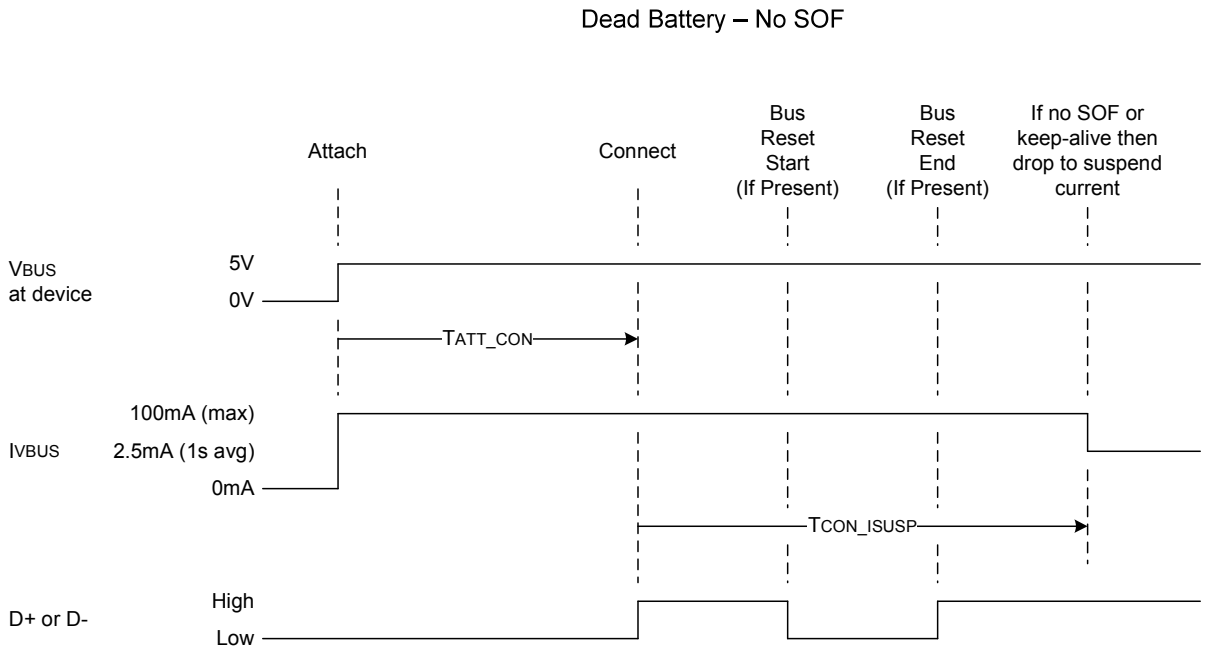

Figure 2-3 Dead Battery – With Connect

After a device with a dead, weak or no battery connects, the Dead Battery Provision allows such a device to draw up to 100mA max for T_{CON_ISUSP} or until the first SOF or keep-alive. If a device does not receive an SOF or keep-alive after T_{CON_ISUSP}, then it shall reduce its current draw to less than 2.5mA average.

2.4 OTG Considerations

A portable device with a dead battery cannot differentiate between a PC and an OTG A-device using the mechanism defined in this spec. Thus, the portable device will treat both the same.

If an OTG A-device is connected to a portable device with a dead battery, then the OTG A-device is under no obligation to provide any more current than it normally would to any device on its Targeted Peripheral List (TPL).

If a portable device with a dead battery draws more current than the A-device can provide, then the A-device is allowed to end the session. If the portable device does not connect before the A-device would normally time out the session, then the A-device is allowed to end the session.

3. Detection Mechanism

3.1 Overview

Figure 3-1 is a block diagram showing a portable device attached to a host, hub or USB charger.

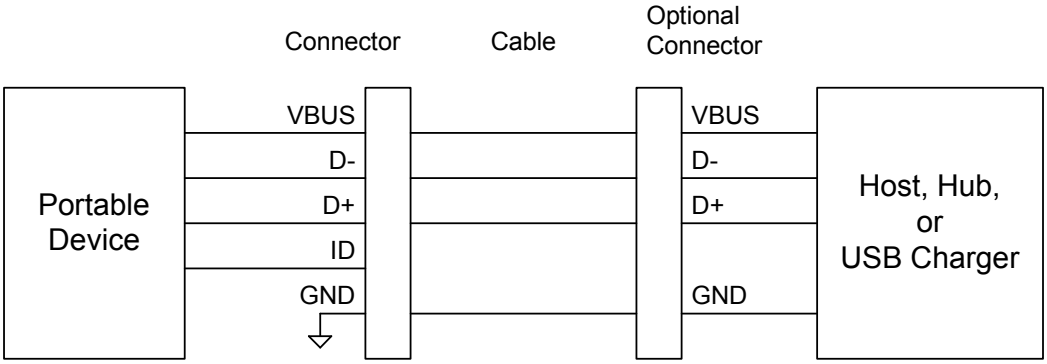

Figure 3-1 System Overview

Upon being attached to a host, hub, or USB charger, a portable device detects a voltage on VBUS. A portable device must then determine what it is attached to, and limit its current appropriately.

USBIF000012

DELTRAN EX1025
IPR2024-01219

3.2 Dedicated Charger

Figure 3-2 shows the case where a portable device is attached to a dedicated charger.

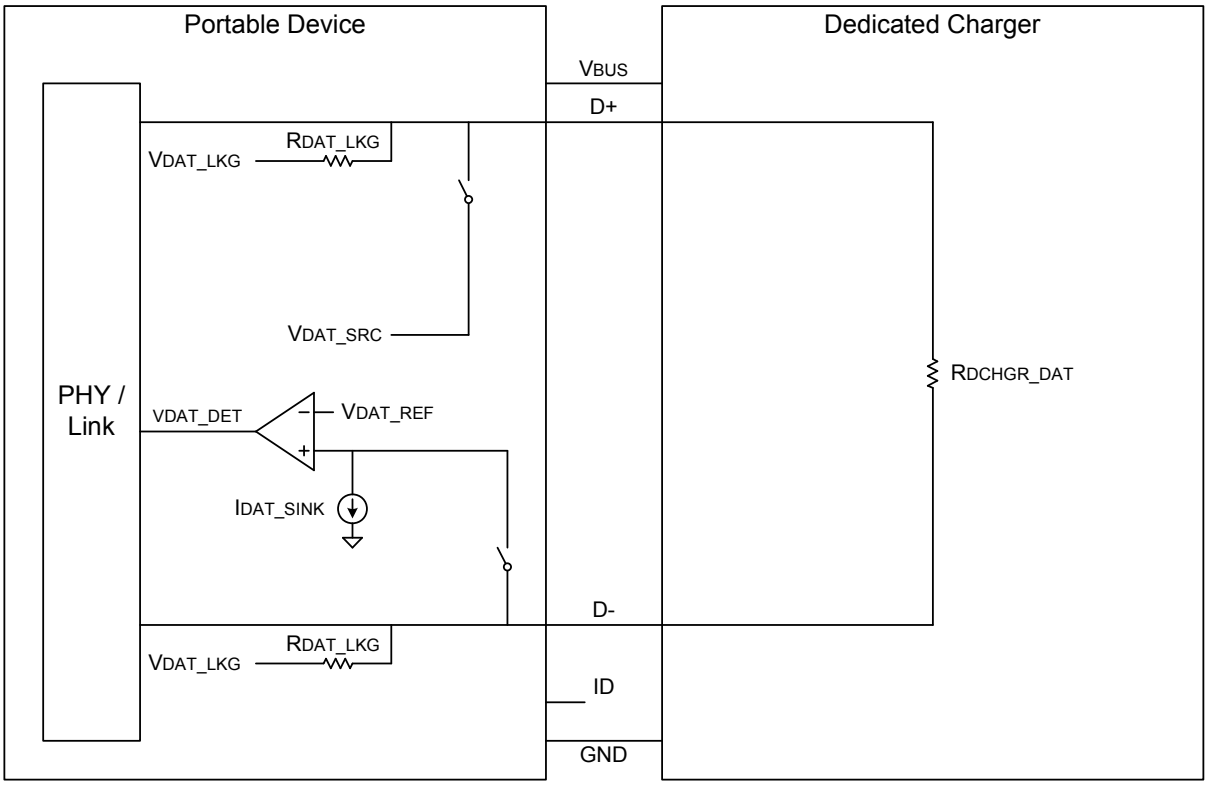

Figure 3-2 Dedicated Charger

When a portable device detects a valid voltage on VBUS, it shall use the following mechanism to detect if it is attached to a USB charger.

A portable device shall drive the D+ line to a voltage of VDAT_SRC. It shall be capable of keeping the D+ voltage at VDAT_SRC when sourcing a current of IDAT_SRC. A portable device shall also sink a current of IDAT_SINK from D-. The current sink shall be such that it sinks a current of IDAT_SINK whenever the voltage on D- is in the range of VDAT_SINK.

A dedicated charger is required to short the D+ and D- line with a resistance of RDCHGR_DAT. When a portable device is attached to a dedicated charger, the voltage it drives on the D+ line appears at the D- line. Since VDAT_SRC is greater than VDAT_REF, the portable device detects that it is attached to a USB charger. A portable device that does charger detection is required to follow the charger detection timing described in Section 3.7.

3.3 Host or Hub

Figure 3-3 shows the case where a portable device to is attached to a host or hub.

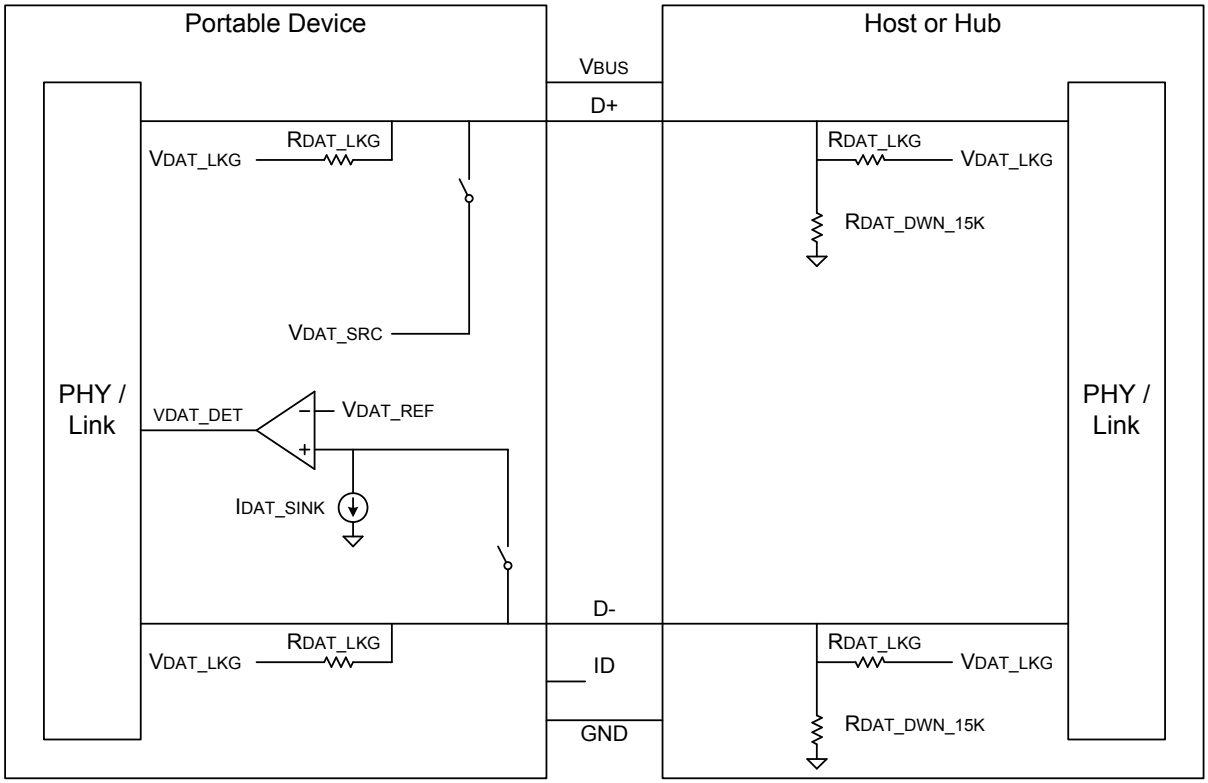

Figure 3-3 Host or Hub

A portable device shall drive the D+ line to a voltage of V_{DAT_SRC}. A portable device shall also sink a current of I_{DAT_SINK} from D-.

Since hosts and hubs pull the D- line to ground through $R_{DAT_DWN_15K}$, the voltage on the D- line is less than V_{DAT_SRC}. The portable device detects that it is not connected to a USB charger, and is required to comply with the requirements of the USB spec and the Dead Battery Provision.

A portable device that does charger detection is required to follow the charger detection timing described in Section 3.7.

USBIF000014

DELTRAN EX1025
IPR2024-01219

3.4 Host Charger or Hub Charger

Figure 3-4 shows the case where a portable device is connected to a host charger or hub charger.

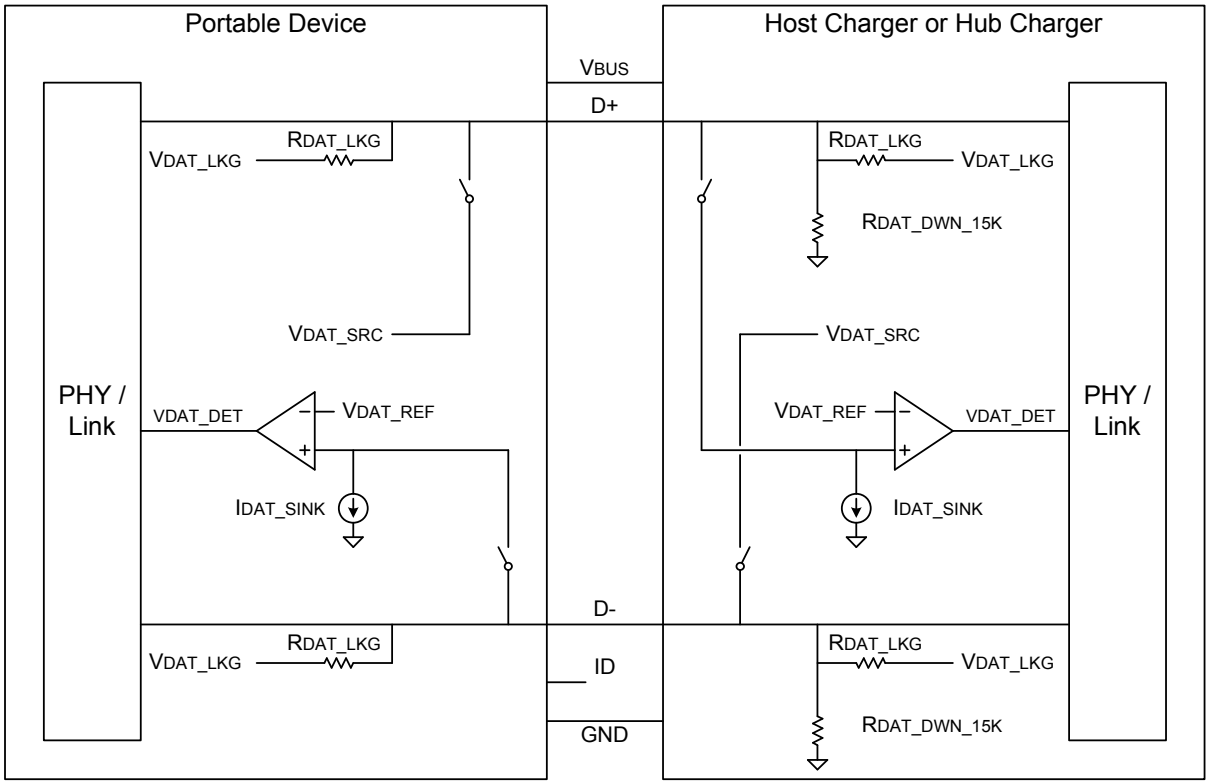

Figure 3-4 Host Charger or Hub Charger

A portable device shall drive the D+ line to a voltage of VDAT_SRC. A portable device shall also sink a current of IDAT_SINK from D-.

A host or hub charger shall sink a current of IDAT_SINK from D+. The current sink shall be such that it sinks a current of IDAT_SINK whenever the voltage on D+ is in the range of VDAT_SINK.

If a host or hub charger detects that the voltage on D+ is greater than VDAT_REF, but less than VLGC, then it shall output a voltage of VDAT_SRC onto the D- line. A host or hub charger shall be capable of keeping the D- voltage at VDAT_SRC when sourcing a current of IDAT_SRC. The host or hub charger shall drive D- to VDAT_SRC within TDM_SRC_EN of D+ going above VDAT_REF.

Since VDAT_SRC is greater than VDAT_REF, a portable device detects that it is attached to a USB charger. A portable device is then allowed to draw a current up to IDEV_HCHGR_LFS or IDEV_HCHGR_HS for as long as VBUS remains asserted.

Portable devices that do charger detection, as well as host or hub chargers, are required to follow the charger detection timing described in Section 3.7.

3.5 Charging Current Limits

The standard-A connectors defined in the USB 2.0 spec are rated for 1.5A. Since hosts, hubs and USB chargers all use standard-A connectors, the maximum current that can be drawn from any of these devices is 1.5A.

Thus, a dedicated charger is required to current limit at some current less than 1.5A, (or I_{DCHGR}). In order for a portable device to force a charger into current limit mode, a portable device is allowed to try and draw a current that is greater than I_{DCHGR}, which can be as high as I_{DEV_DCHGR}. The reason that a portable device would want the charger to current limit, is so that the charger voltage will drop, and the portable device will not have to dissipate as much power in the phone.

A host or hub charger is allowed to output more than 1.5A, (I_{HCHGR}), since most hosts or hubs do not implement current limiting. When a portable device is connected to a host or hub charger and is communicating at low-speed or full-speed, then the portable device is required to limit its current to less than 1.5A, ($I_{DEV_HCHGR_LFS}$).

When a portable device is connected to a host or hub charger and is communicating at hi-speed, then the portable device is required to limit its current to less than $I_{DEV_HCHGR_HS}$.

3.6 Ground Current and Noise Margins

As shown in Figure 7-47 of the USB 2.0 spec, a current of 100mA through the ground wire of a USB cable can result in a voltage difference of 25mV between the host ground and the portable device ground. As the charging current increases, this ground difference has the effect of reducing noise margins.

3.6.1 Low-speed and Full-speed Communication

As indicated in Section 3.5, the maximum current that a portable device is allowed to draw from a charger is 1500mA. At this current, the portable device ground can be 375mV higher than the host charger ground. As shown in Table 7-7 of the USB 2.0 spec, a logic output low from the portable device can be as high as 300mV. When added to the 375mV offset of the portable device ground, this means the host charger could see a voltage of 675mV when the portable device is outputting a logic low.

As shown in Table 7-7 of the USB 2.0 spec, the host charger input logic low can be as low as 800mV. When compared to the 675mV coming from the portable device, this leaves a noise margin of 125mV. Thus, a portable device is able to communicate with a host charger or hub charger at low-speed or full-speed when drawing a current of 1500mA, (or $I_{DEV_HCHGR_LFS}$).

3.6.2 Hi-speed Communication

Table 7-7 of the USB 2.0 spec indicates that a hi-speed USB PHY is recommended to work when the common mode voltage of the received signal (V_{HSCM}) is between -50mV and +500mV. In fact, this is tested in hi-speed compliance, so this is actually a requirement.

The min and max common mode voltage that a PHY can transmit is:

- $V_{HS_CM_TX} = (V_{HS_OL} + V_{HS_OH}) / 2$
- $V_{HS_CM_TX}$ (min) = (-10mV + 360mV) / 2 = 175mV
- $V_{HS_CM_TX}$ (max) = (+10mV + 440mV) / 2 = 225mV

When a portable device is drawing current from a host charger, then its ground voltage is higher than that of the host charger.

USBIF000016

DELTRAN EX1025
IPR2024-01219

Consider the case where a host charger is transmitting data to a portable device. In the worst case, the host charger is outputting a minimum common voltage of 175mV. In order for this common mode voltage to be at -50mV with respect to portable device ground, the portable device ground has to be 225mV higher than host charger ground.

Now consider the case where a portable device is transmitting data to a host charger. In the worst case, the portable device is outputting a maximum common mode voltage of 225mV. In order for this common mode voltage to be at +500mV with respect to host charger ground, the portable device ground has to be 275mV higher than host charger ground.

Thus, the limiting case is where the host charger is transmitting to the portable device. For this case, the portable device ground can be up to 225mV above host charger ground. As shown in Figure 7-47 of the USB 2.0 spec, a current of 100mA can result in a voltage offset of 25mV. Thus, the maximum charging current that can be allowed during hi-speed communication is 900mA, or $I_{DEV_HCHGR_HS}$.

3.6.3 Low-speed Connect

Another effect of this ground voltage difference occurs when a low-speed portable device is connected to a host charger. After the portable device has detected it is connected to a host charger, it may decide to wait for a period of time before connecting to the host charger. When not connected, the portable device is outputting a logic low (<300mV) on D+. If the portable device is drawing 1500mA from the host charger, then the portable device ground could be raised by 375mV. This would cause the host charger to see a voltage of 675mV on the D+ line.

Since 675mV on D+ is larger that V_{DAT_REF} in the host charger, (see Figure 3-4), the host charger will respond by driving a voltage of V_{DAT_SRC} onto D-. This doesn't cause any problems if the portable device is a full-speed device. A full-speed device is still able to connect (pull D+ high), while the host charger is driving D-.

However, this could cause problems for a low-speed device. A low-speed device would not be able to connect (pull D- high), when the host charger is driving D-. For this reason, a low-speed device is required to reduce its current draw to less than 100mA when connecting to a host charger or hub charger.

3.7 Charger Detection Timing

Figure 3-5 shows the timing associated with charger detection.

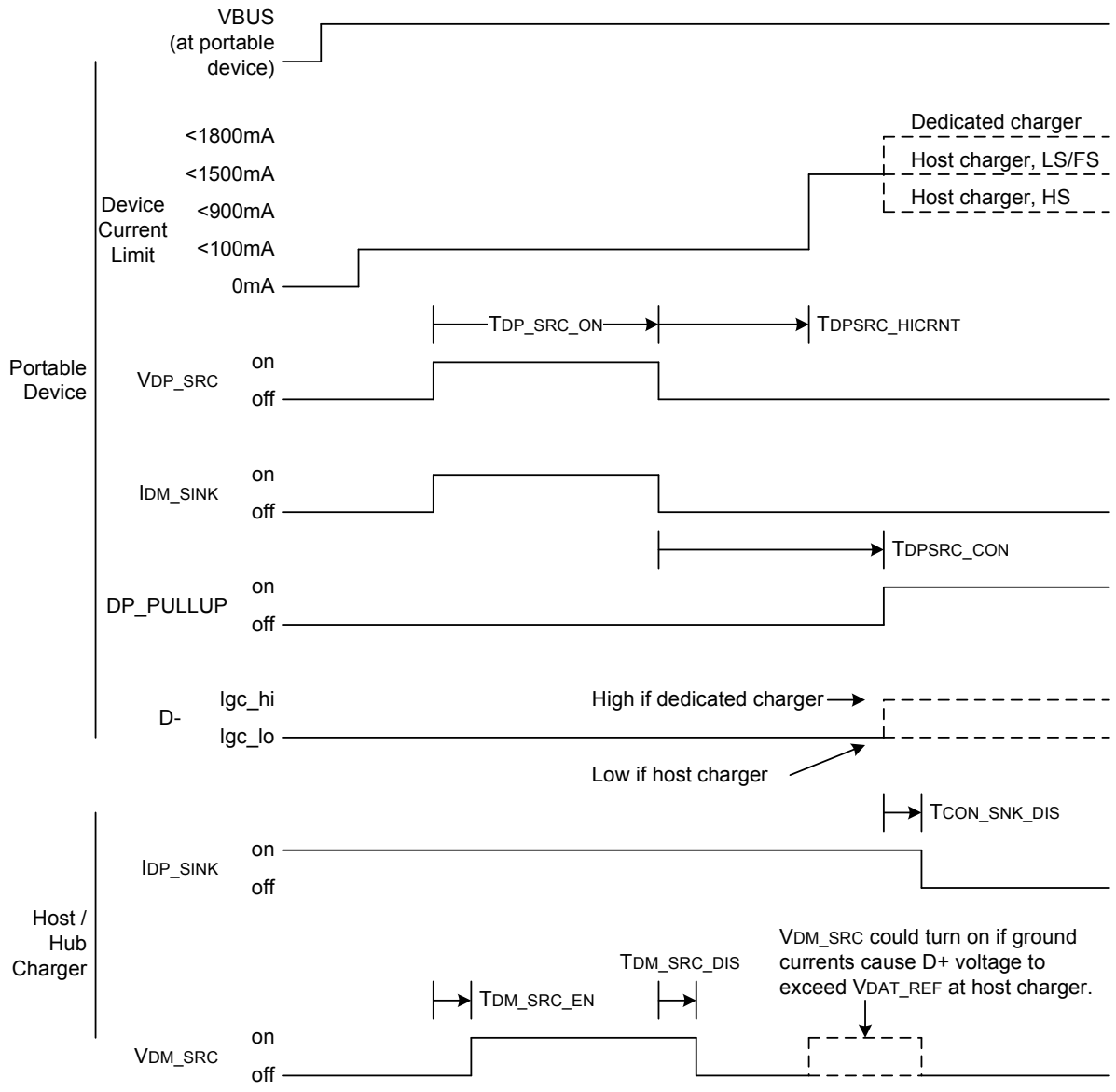

Figure 3-5 Charger Detection Timing

After a portable device detects VBUS, it is allowed to check if the remote device is a charger, by applying a voltage to D+ and checking the voltage on D-. When a portable device applies a voltage of VDAT_SRC to D+, it must do so for a time of at least TDP_SRC_ON. In order for the portable device to determine that it is connected to a charger, it must detect a voltage greater than VDAT_REF on D- for a time of at least TCHGR_DET_DBNC.

Before being allowed to draw more than 100mA from a remote device, a portable device is required to stop driving a charger detect voltage onto D+ for a time of at least TDPSRC_HICRNT. The reason for this is as follows. If a portable device draws a current of 1500mA from a host charger, then the portable device ground could be as much as 375mV higher than the host charger ground. If the portable device then drives

USBIF000018

DELTRAN EX1025
IPR2024-01219

a voltage of V_{DAT_SRC} onto D+, the host charger could see a voltage on D+ of V_{DAT_SRC} plus 375mV. This could exceed the logic low input threshold of the host charger, and cause the host charger to think the portable device had connected, when in fact it had not.

A full-speed portable device is allowed to connect any time after it has stopped driving a voltage of V_{DAT_SRC} onto D+. A low-speed portable device is only allowed to connect when it is drawing less than 100mA from a host charger. The reason for this is described in Section 3.6.

When a full-speed device connects, it pulls the D+ line high. If the D- line goes high, then the portable device is attached to a dedicated charger, and may to try and draw up to I_{DEV_DCHGR} from the charger. If the D- line stays low, then the portable device is attached to a host charger, and must then limit its current draw to $I_{DEV_HCHGR_LFS}$ or $I_{DEV_HCHGR_HS}$, depending on the speed.

When a low-speed device is drawing less than 100mA, it is allowed to connect by pulling the D- line high. If the D+ line goes high, then the portable device is attached to a dedicated charger, and may try to draw up to I_{DEV_DCHGR}. If the D+ line stays low, then the portable device is attached to a host charger, and must limit its current draw to $I_{DEV_HCHGR_LFS}$.

When a host or hub charger detects the voltage on D+ is greater than V_{DAT_REF} but less than V_{LGC}, it shall apply a voltage of V_{DAT_SRC} to the D- line within a time of $T_{DM_SRC_EN}$. When the voltage on D+ goes below V_{DAT_REF}, then the host or hub charger shall stop driving a voltage onto D- within a time of $T_{DM_SRC_DIS}$.

When a host or hub charger detects that a peripheral is not connected, then it is required to sink a current of I_{DAT_SINK} from D+. It shall continue to sink a current of I_{DAT_SINK} from D+ until it detects that a peripheral is connected, that is, either D+ or D- being pulled to logic high.

If a portable device detects it is connected to a charger, and VBUS goes low and then high again, then the portable device must repeat the charger detection process before being allowed to draw current in excess of what it could draw from host.

3.8 Example Implementation

It is expected that some portable devices, host chargers and hub chargers will integrate the above detection circuitry in the PHY. Figure 3-6 shows an example of a PHY that would be able to support the charger detection functions for a portable device, a host charger or a hub charger.

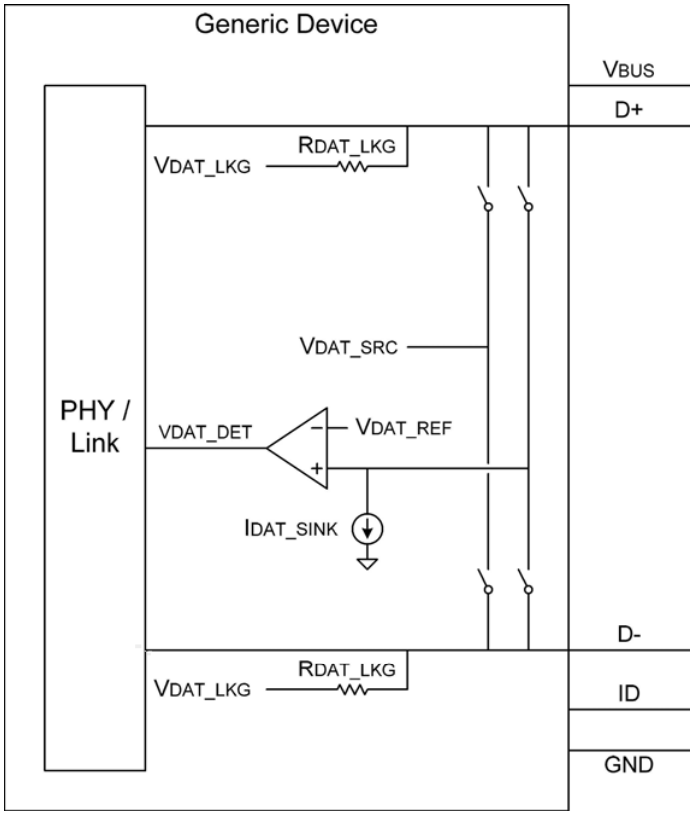

Figure 3-6 Example Implementation

If the above architecture is used, then it is recommended that independent control be provided for each of the above four switches, in order to allow support for possible future functions.

3.9 Signal Integrity

In order for a portable device to detect a USB charger, the portable device needs to have additional circuitry as shown in Figure 2-2. When implementing this additional circuitry on a portable device, it must be done in such as way so that the portable device can still pass compliance testing.

For instance, Section 7.1.6.2 of the USB 2.0 spec recommends that the total capacitance to ground of either the D+ or D- line (C_{HSLOAD}) be less than 10pF.

3.10 Resistive Detection Mechanism

The voltage source detection mechanism defined in previous subsections is too complex to be implemented with existing silicon and glue logic. In order to enable charger detection with existing silicon, an alternative method is defined. This method requires the addition of two fixed resistors as shown in Figure 3-7.

USBIF000020

DELTRAN EX1025
IPR2024-01219

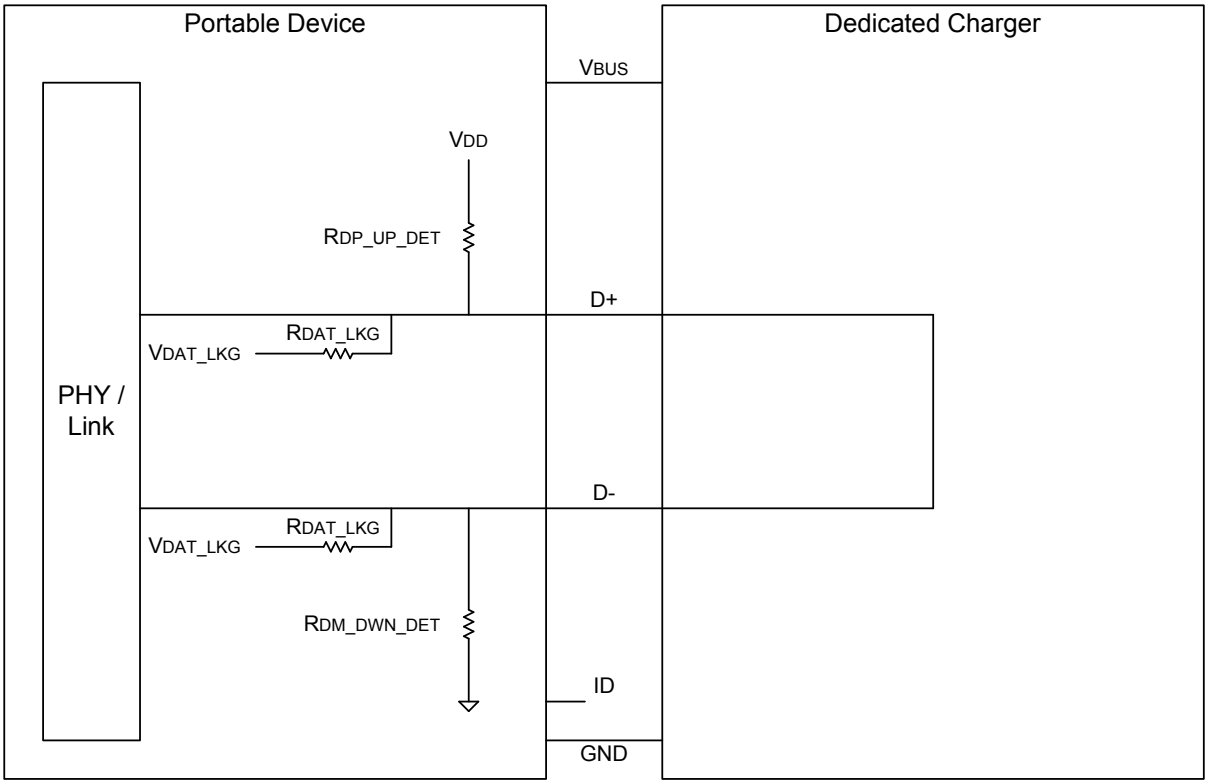

Figure 3-7 Resistive Detection – Dedicated Charger

The resistive detection method pulls the D+ line high with a resistance of $R_{DP_UP_DET}$, and pulls the D- line low with a resistance of $R_{DM_DWN_DET}$. If a portable device is attached to a dedicated charger, then both the D+ and D- lines will go to a logic high. As shown in Figure 3-8, if a portable device is attached to a host charger or hub charger, then both the D+ and D- lines will go to logic low.

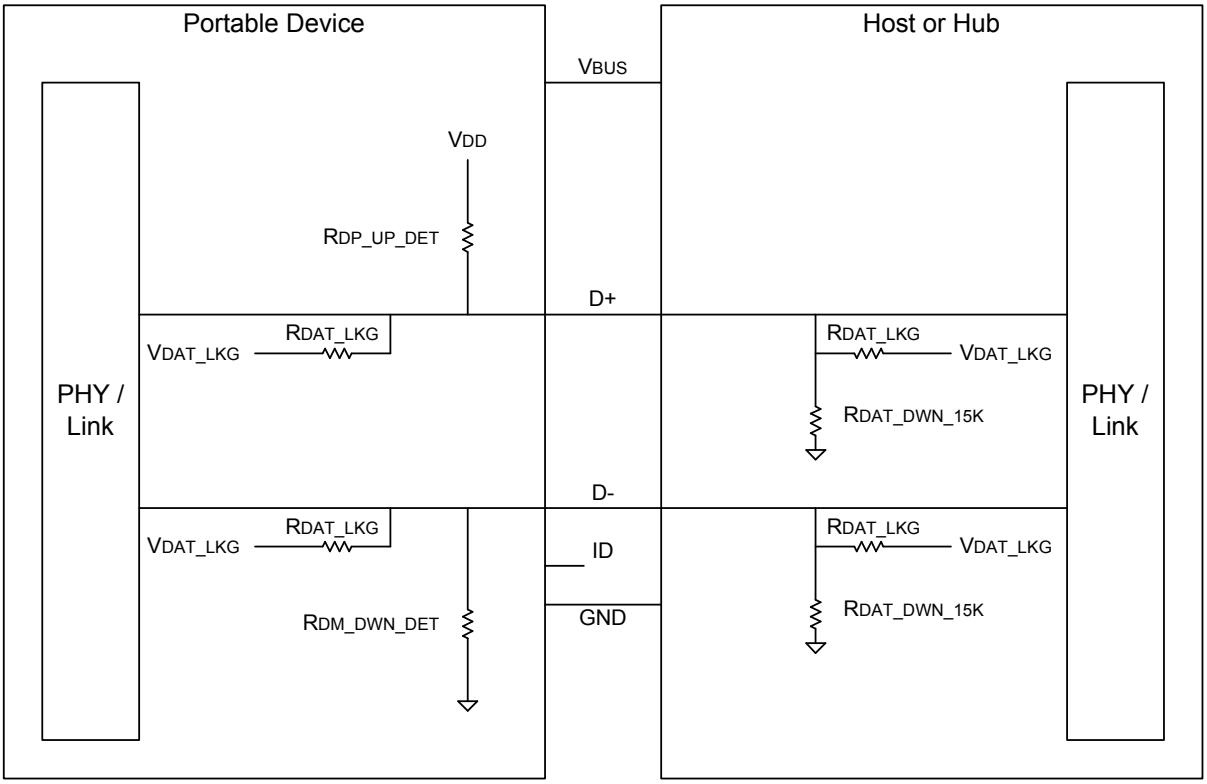

Figure 3-8 Resistive Detection – Host

The single ended receivers in the portable device PHY can be used to determine whether the D+ and D- lines are at logic high or low.

The resistive detection method can be implemented provided:

- portable device has D+/- leakage current less than $I_{LKG_RES_DET}$
- portable device acts as a peripheral only

The resistive detection method will then reliably detect:

- portable device attached to dedicated charger with D+ and D- shorted
- portable device attached to standard host or hub

The resistive detection method does not work reliably under the following circumstances:

- portable device has D+/- leakage current greater than $I_{LKG_RES_DET}$
- portable device acts as an OTG device

In addition the resistive detection method does not work reliably when

- portable device attached to OTG device
- portable device attached to host or hub that has D+/- leakage current greater than $I_{LKG_RES_DET}$
- portable device attached to host charger or hub charger

If the resistive detection method is implemented the portable device shall only charge when it positively detects a dedicated charger with D+ and D- shorted.

USBIF000022

DELTRAN EX1025
IPR2024-01219

If the resistive detection method is implemented the portable device shall not charge before connecting under any other circumstances except as governed by the Dead Battery Provision.

If the resistive detection method is implemented and a dedicated charger is not detected, the portable device may charge after it has been enumerated and configured as a USB peripheral. The portable device must then limit the charging current according to the Max_Current parameter in the device descriptor and must follow all USB specifications for suspend, resume, configured and unconfigured current etc.

The USB 2.0 spec allows the D+ and D- lines of a device, host or hub to have an input impedance of R_{DAT_LKG}. See Table 7-7 of the USB 2.0 spec. This impedance is allowed to terminate to a voltage of V_{DAT_LKG}, which in turn translates to a leakage current of +/-12uA. In practice, many current devices, hosts and hubs have leakage currents less than $I_{LKG_RES_DET}$, and will work with resistive detection. However, as devices move to silicon with smaller geometries, it is expected that leakage currents will increase, and the resistive detection method could result in false connect events and/or reduced noise margins.

It may be possible to optimize the resistive detection method so that it will work when leakage currents are greater than $I_{LKG_RES_DET}$, or when the portable device is an OTG device. Such optimizations might include lower leakage currents, tighter tolerance on the pull-up voltage, switching the detection resistors in and out, etcetera. The analysis of such optimizations is beyond the scope of the specification.

Longer term, it is recommended that devices implement the charger detection mechanism described in Section 3.2.

4. Charging Specifications

4.1 USB Charger

A USB charger shall have an output voltage of V_{CHGR} when it is not in current limit mode. A dedicated charger shall go into current limit mode at some current within the range of I_{DCHGR}. A host charger or hub charger is not required to go into current limit mode, but may do so at some current within the range of I_{HCHGR}. In current limit mode, the output voltage of a USB charger shall drop to a level that allows the USB charger to continue outputting its maximum current.

If the output voltage of a USB charger drops to $V_{CHGR_SHT_DWN}$, then the USB charger is allowed to stop outputting current. This voltage may be measured at the output USB charger, and does not need to include the voltage drop across the cable. A USB charger shall remain in current limit mode at voltages above $V_{CHGR_SHT_DWN}$.

If a USB charger goes into shutdown mode due to a short across VBUS and ground, and the short is subsequently removed, then the charger output voltage shall recover within a time of $T_{SHT_DWN_REC}$. If a charger does support the shutdown mode, then it is recommended that during shutdown, the charger limit its output current to I_{CHGR_SHTDWN}.

A USB charger shall output a voltage of V_{DAT_SRC} on D- when a voltage of V_{DAT_SRC} is applied to the D+ terminal of a USB charger. A dedicated charger is required to do this by shorting the D+ line to the D- line.

If the current drawn from a USB charger changes suddenly within the range of 0mA to 500mA, then the transient voltage from a USB charger shall not go below V_{CHGR_UNDSHT}. Under no circumstances shall the transient voltage of a USB charger exceed V_{CHGR_OVRSHT}.

A USB charger is required to have a standard-A receptacle or a captive cable terminating in a micro-B plug.

A dedicated charger is required to specify on its packaging or casing, the current at which the output voltage of the charger drops to 3.6V. The actual current at which the charger voltage drops to 3.6V is required to be with +/-20% of the current value specified on the package or casing.

Figure 4-1 shows a graph of the charger output voltage versus output current.

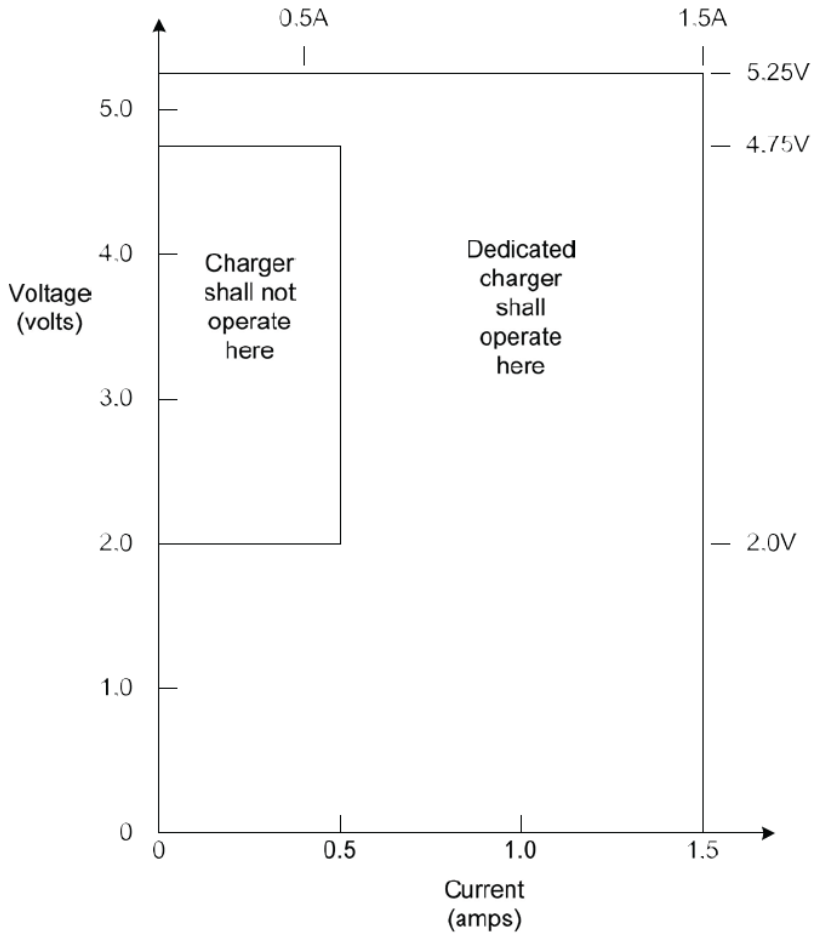

Figure 4-1 Charger Voltage versus Current

4.2 Portable Devices

Portable devices shall limit the amount of current they attempt to draw from a dedicated charger to I_{DEV_DCHGR}. Figure 4-2 shows the current a portable device can draw from a dedicated charger.

USBIF000024

DELTRAN EX1025
IPR2024-01219

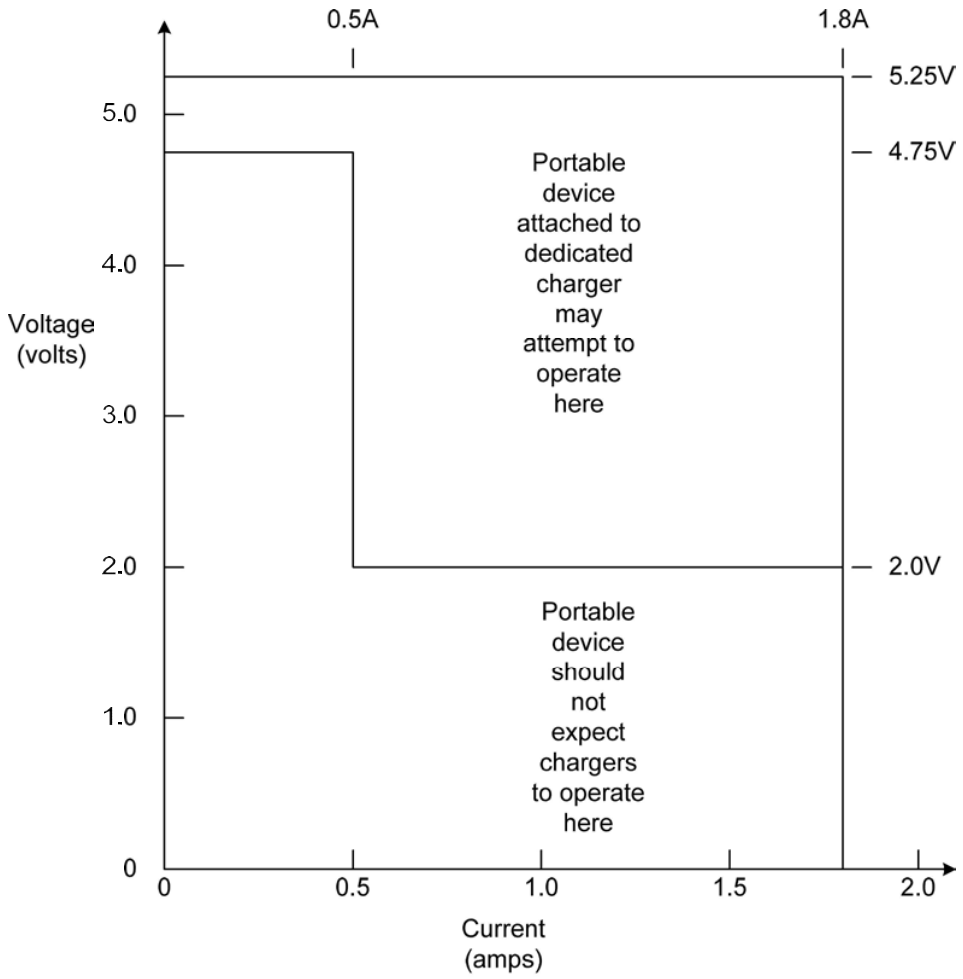

Figure 4-2 Portable Device Current from Dedicated Charger

Portable devices shall limit the amount of current they draw from a host or hub charger to $I_{DEV_HCHGR_LFS}$ when they are communicating at low or full-speed, or to $I_{DEV_HCHGR_HS}$ when they are communicating at hi-speed. Figure 4-3 shows the current a portable device can draw from a host charger or hub charger.

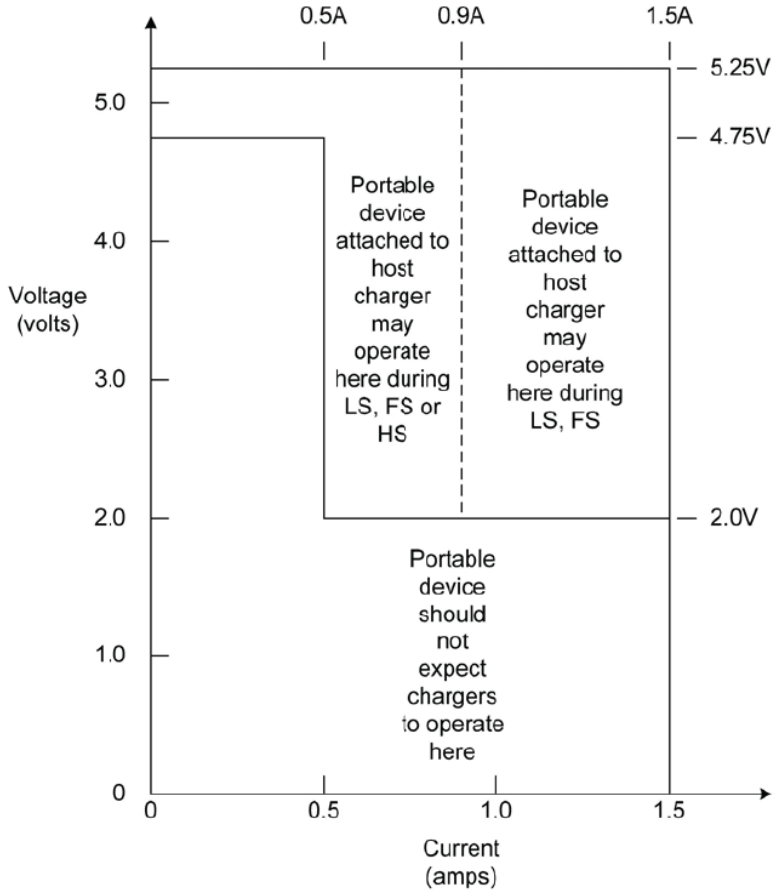

Figure 4-3 Portable Device Current from Host Charger

Portable devices shall not cause the voltage between VBUS and GND to drop below VCHGR_SHT_DWN under normal operating conditions. This voltage shall be measured at the portable device.

Figure 4-4 shows an example of how a portable device might limit the amount of current it draws from a USB charger.

USBIF000026

DELTRAN EX1025
IPR2024-01219

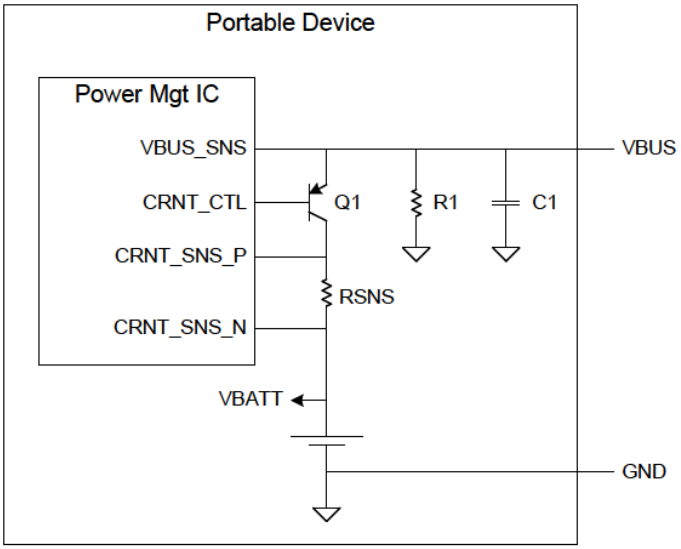

Figure 4-4 Current Limiting Example

In the example shown in Figure 4-4, the portable device measures how much current is being drawn from the USB charger through RSNS. It then controls the amount of current coming into the portable device by adjusting the base current of Q1.

With the above implementation, the portable will not cause the voltage on VBUS to go below VCHGR_SHT_DWN as long as the battery voltage is greater than VCHGR_SHT_DWN.

5. Parameter Values

This section lists the values of parameters defined in this spec.

Table 5-1 Voltages

Parameter	Symbol	Conditions	Min	Max	Units	Ref
Charger Output Voltage	VCHGR	ICHGR < 500mA	4.75	5.25	V	4.1
Logic Threshold	VLGC		0.8	2.0	V	3.4
Data Source Voltage	VDAT_SRC	@ IDAT_SRC	0.5	0.7	V	3.2
Data Detect Voltage	VDAT_REF		0.25	0.4	V	3.2
Data Current Sink Voltage	VDAT_SINK		.15	3.6	V	3.2
Data Line Leakage Voltage	VDAT_LKG		0	3.6	V	3.10
Charger Shut Down Voltage	VCHGR_SHT_DWN			2.0	V	4.1
Charger Overshoot Voltage	VCHGR_OVRSHT			6.0	V	4.1
Charger Undershoot Voltage	VCHGR_UNDSHT	ICHGR < 500mA	4.0		V	4.1

Table 5-2 Currents

Parameter	Symbol	Conditions	Min	Max	Units	Ref
Dedicated Charger Output Current	I_{DCHGR}		0.5	1.5	A	4.1
Host Charger Output Current	I_{HCHGR}		0.5		A	4.1
Device Current from Dedicated Charger	I_{DEV_DCHGR}			1.8	A	4.2
Device Current from Host / Hub Charger at Low or Full Speed	$I_{DEV_HCHGR_LFS}$			1.5	A	3.6.1
Device Current from Host / Hub Charger at Hi-speed	$I_{DEV_HCHGR_HS}$	After connecting. See Figure 3-5.		0.9	A	3.6.2
Data Source Current	I_{DAT_SRC}		0	200	uA	3.2
Data Sink Current	I_{DAT_SINK}	$V_{D+} = V_{DAT_SINK}$	50	150	uA	3.2
Charger Shutdown Current	I_{CHGR_SHTDWN}			100	mA	4.1
Resistive detect leakage current	$I_{LKG_RES_DET}$		-2.5	2.5	uA	3.10

Table 5-3 Resistances

Parameter	Symbol	Conditions	Min	Max	Units	Ref
Data Line Leakage Resistance	R_{DAT_LKG}		300		kΩ	3.10
Data Pull-down Resistance	$R_{DAT_DWN_15K}$		14.25	24.8	kΩ	3.3
Charger resistance across D+/-	R_{DCHGR_DAT}			200	Ω	3.2
D+ pull-up for resistive detect	$R_{DP_UP_DET}$		122	128	kΩ	3.10
D- pull-down for resistive detect	$R_{DM_DWN_DET}$		367	383	kΩ	3.10

Table 5-4 Times

Parameter	Symbol	Conditions	Min	Max	Units	Ref
Attach to connect time	T_{ATT_CON}		0		ms	2.3.1
Unit load current to connect time	T_{UNIT_CON}			100	ms	2.3.1
Unit load to suspend current	T_{UNIT_ISUSP}			100	ms	2.3.2
Connect to suspend current time	T_{CON_ISUSP}			500	ms	2.3.3
D+ source on time	$T_{DP_SRC_ON}$		100		ms	3.7
D+ source off to high current	T_{DPSRC_HICRNT}		40		ms	3.7
D+ source off to connect	T_{DPSRC_CON}		40		ms	3.7
Connect to D+ sink disable	$T_{CON_SINK_DIS}$			20	ms	3.7
D- source enable time	$T_{DM_SRC_EN}$			20	ms	3.7
D- source disable time	$T_{DM_SRC_DIS}$			20	ms	3.7
Charger detect debounce	$T_{CHGR_DET_DBNC}$		20		ms	3.7
Charger shut down recover time	$T_{SHT_DWN_REC}$			100	ms	4.1