# 1.2MHZ，26V Step-up DC/DC Converter

## GENERAL DESCRIPTION

The XR3403 is a high frequency, high efficiency DC to DC converter with an integrated 3A, 0.1Ω power switch capable of providing an output voltage up to 26V. The fixed 1.2MHz allows the use of small external inductions and capacitors and provides fast transient response. It integrates Soft start, Comp,. only need few components outside. It can be adjusted SW current limit by one resistor.

## FEATURES

- 2.3V to 6V input voltage Rangel
- Efficiency up to 96%
- 26V Boost converter with adjusted switch current
- 1.2Mhz fixed Switching Frequency
- Integrated soft-start
- Thermal Shutdown
- Under voltage Lockout
- SOT23-6 Package

## APPLICATIONS

- Handheld Devices
- GPS Receiver
- Digital Still Camera
- Portable Applications
- DSL Modem
- PCMCIA Card
- TFT LCD Bias Supply

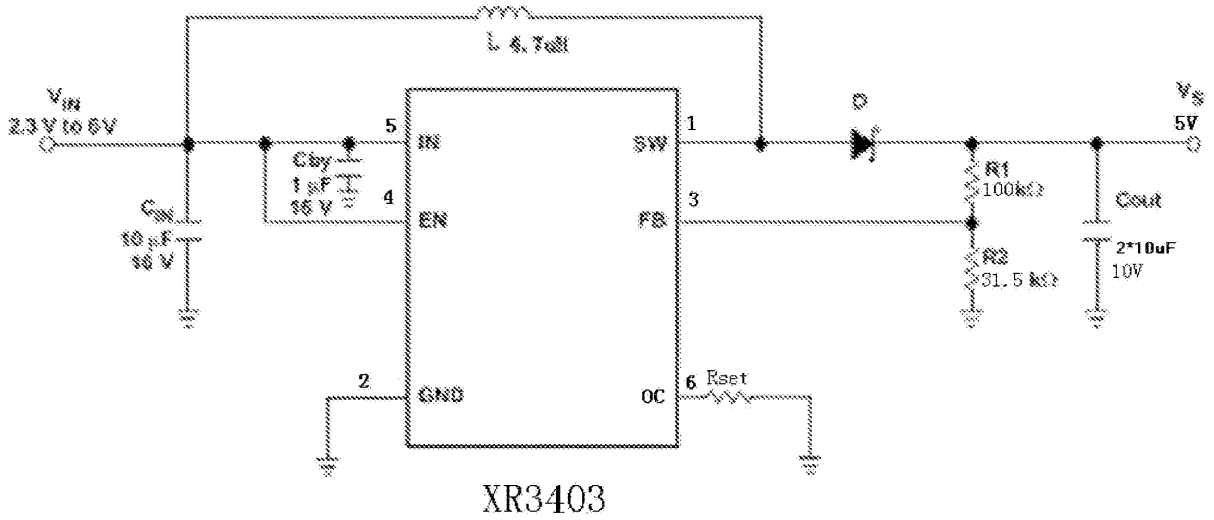


**Figure 1. Typical Application Circuit**

## ORDERING INFORMATION

| PART NUMBER | TEMP RANGE | SWICHING FREQUENCY | OUTPUT VOLTAGE (V) | ILIM (A) | PACKAGE | PINS |
|---|---|---|---|---|---|---|
| XR3403 | -40°C to 85°C | 1.2MHZ | ADJ | ADJ | SOT23-6 | 6 |

## PIN CONFIGURATION

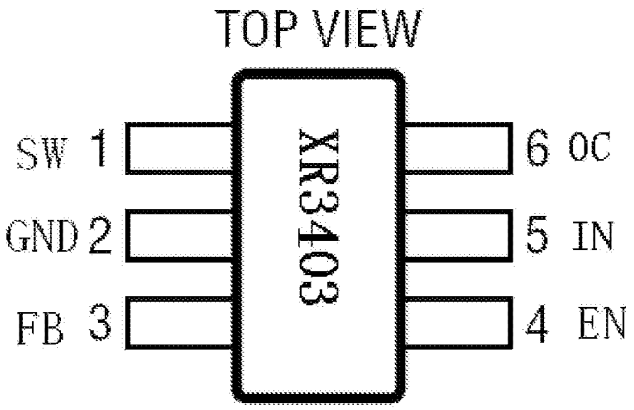


**Figure 2. PIN Configuration**

## PIN DESCRIPTION

| PIN NUMBER | PIN NAME | PIN DESCRIPTION |
|---|---|---|
| 1 | SW | Switch pin |
| 2 | GND | Ground |
| 3 | FB | Feedback pin |
| 4 | EN | Shutdown control input., Connect this pin to logic high level to enable the device |
| 5 | IN | Input power supply pin |
| 6 | OC | SW current limit setting pin, Set current limit by Rset |

## ABSOLUTE MAXIMUM RATINGS

(Note: Do not exceed these limits to prevent damage to the device. Exposure to absolute maximum rating conditions for long periods may affect device reliability.)

| PARAMETER | VALUE | UNIT |
|---|---|---|
| Supply Voltage VIN | -0.3 to 6.5 | V |
| FB, EN Voltage | -0.3 to VIN+0.3 | V |
| SW Voltage | Vin+0.3 to 28V | V |
| Operating Ambient Temperature | -40 to 85 | °C |

| | | |
|---|---|---|
| Maximum Junction Temperature | 150 | °C |
| Storage Temperature | -55 to 150 | °C |
| Lead Temperature (Soldering, 10 sec) | 300 | °C |

## ELECTRICAL CHARACTERISTICS

($V_{IN}$ = 3.6V, $T_A$= 25°C unless otherwise specified)

| PARAMETER | SYMBOL | TEST CONDITIONS | MIN | TYP | MAX | UNIT |
|---|---|---|---|---|---|---|
| Input Voltage Range | $V_{IN}$ | | 2.3 | | 6.0 | V |
| Boost output voltage range | Vout | | 26 | | | V |
| UVLO Threshold | $V_{UVLO}$ | $V_{HYSTERESIS}$ =100mV | 2.1 | 2.2 | 2.3 | V |
| Operating Supply Current | $I_{SUPPLY}$ | $V_{FB}$ =1.3V, EN=Vin, $I_{Load}$ =0 | | 75 | 135 | μA |
| Shutdown Supply Current | | $V_{EN}$ =0V, $V_{IN}$ =4.2V | | 0.1 | 1 | |
| Regulated Feedback Voltage | $V_{FB}$ | | 1.188 | 1.2 | 1.212 | V |
| Peak Inductor Current limit (N-MOSFET Current limit) | $I_{lim}$ | Rset=150K Vin=3.3V Vout=5V | 0.8 | 1 | 1.2 | A |
| Peak Inductor Current limit (N-MOSFET Current limit) | $I_{lim}$ | Rset=500K Vin=3.3V Vout=5V | 2.2 | 2.55 | 2.9 | A |
| Oscillator Frequency | $F_{OSC}$ | | 0.9 | 1.2 | 1.5 | MHz |
| Rds(ON) of N-channel FET | | $I_{SW}$ =-100mA | | 0.1 | 0.2 | Ohm |
| Enable Threshold | | $V_{IN}$ = 2.3V to 5.5V | 0.3 | 1 | 1.5 | V |
| Enable Leakage Current | | | -0.1 | | 0.1 | μA |
| SW Leakage Current | | $V_{EN}$ = 0V, $V_{SW}$ = 0V or 5V, $V_{IN}$ = 5V | | | 1 | uA |

## DETAILED DESCRIPTION

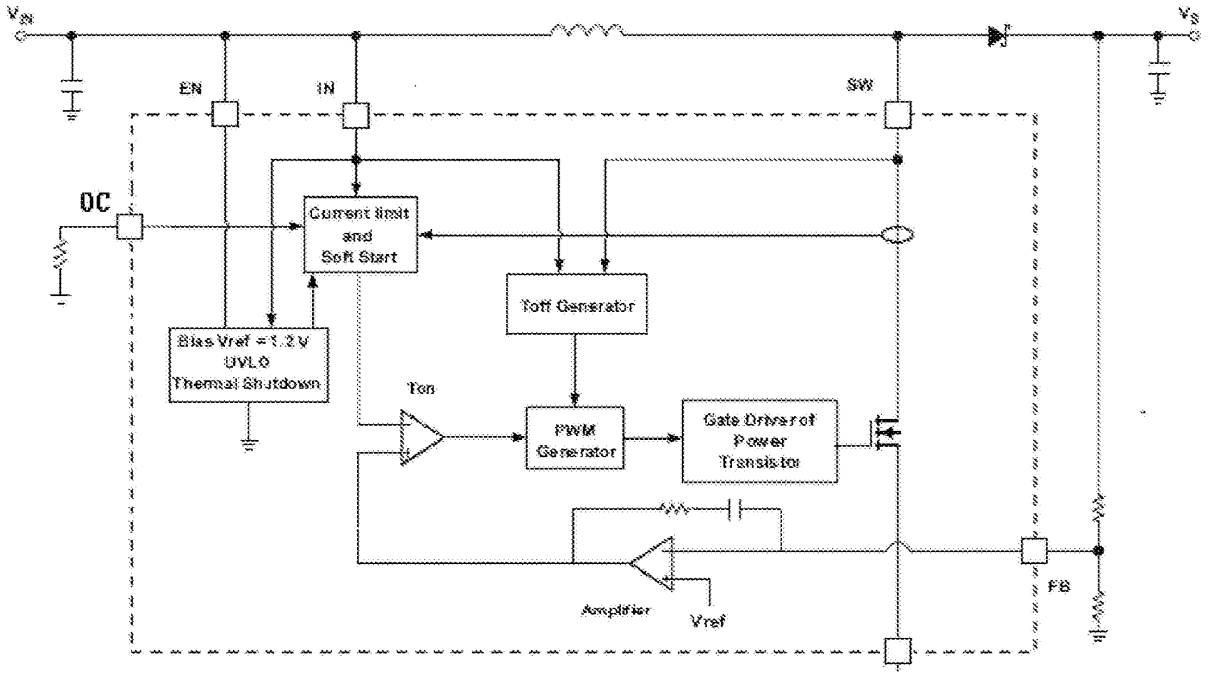


**Figure 3. Functional Block Diagram**

# FUNCTIONAL DESCRIPTION

## NORMAL OPERATION

The boost converter is designed for output voltage up to 26V with a switch MAX peak current limit of 4 A. The device, which operates in a current mode scheme with quasi-constant frequency, is externally 1.2MHZ and the minimum input voltage is 2.3 V. To control the inrush current at start-up a soft-start pin is available.

During the on-time, the voltage across the inductor causes the current in it to rise. When the current reaches a threshold value set by the internal GM amplifier, the power transistor is turned off, the energy stored into the inductor is then released and the current flows through the Schottky diode towards the output of the boost converter. The off-time is fixed for a certain Vin and Vs, and therefore maintains the same frequency when varying these parameters.

However, for different output loads, the frequency may slightly change due to the voltage drop across the Rdson of the power transistor which will have an effect on the voltage across the inductor and thus on $T_{on}$ ( $T_{off}$ remains fixed). Some slight frequency changes might also appear with a fixed output load due to the fact that the output voltage Vs is not sensed directly but via the SW Pin, which affects accuracy.

Because of the quasi-constant frequency behavior of the device , the XR3403 eliminates the need for an internal oscillator and slope compensation, which provides better stability for the system over a wide of input and output voltages range, and more stable and accurate current limiting operation compared to boost converters operating with a conventional PWM scheme .The XR3403 topology has also the benefits of providing very good load and line regulations, and excellent load transient response.



CAR-RPA-ITC-05245
Page 4 of 8
DELTRAN EX1029
IPR2024-01219

## UNDERVOLTAGE LOCKOUT (UVLO)

To avoid mis-operation of the device at low input voltages an under voltage lockout is included that disables the device, if the input voltage falls below 2.2V

## THERMAL SHUTDOWN

A thermal shutdown is implemented to prevent damages due to excessive heat and power dissipation. Typically the thermal shutdown threshold is 150℃ .When the thermal shutdown is triggered the device stops switching until the temperature falls below typically 136℃.Then the device starts switching again.

# APPLICATION INFORMATION

## INDUCTOR SELECTION

In normal operation, the inductor maintains continuous current to the output. The inductor current has a ripple that is dependent on the inductance value. The high inductance reduces the ripple current.

**Selected inductor by actual application:**

| *Manufacturer* | *Part Number* | *Inductance(uH)* | *DRC max (Ohms)* | *Dimensions L*W*H(mm3)* |
|---|---|---|---|---|
| Murata | LQH44PN | 2.2 | 0.049 | 4*4*1.7 |
| | | 3.3 | 0.065 | |
| | | 4.7 | 0.08 | |
| | | 10 | 0.16 | |
| | LQH5BP | 2.2 | 0.030 | 5*5*2 |
| | | 3.3 | 0.044 | |
| | | 4.7 | 0.058 | |
| | | 10 | 0.106 | |
| TDK | SPM6530T | 2.2 | 0017 | 7.1*6.5*3 |
| | | 3.3 | 0.027 | |
| | | 4.7 | 0.036 | |
| | VLP6045LT | 2.2 | 0.020 | 6*6*4.5 |
| | | 3.3 | 0.025 | |
| | | 4.7 | 0.029 | |
| | | 10 | 0.055 | |
| WURTH | 74437324022 | 2.2 | 0.061 | 4.4*4.05 |
| | 744777004 | 4.7 | 0.025 | 7.3*7.3*4.5 |

**Table 1. Recommend Surface Mount Inductors**

**If output voltage is 5V , you can use 2.2uH~ 4.7uH, If output voltage is 12V, 4.7uH~ 10uH is OK, if 24V ,maybe need 10uH**

**Normal application: Input 3.3V (3.6V or 4.2V) to Output 5V 9V 12V 24V;**

**Input 5V to Output 9V 12V 24V**

**Notes: Please select inductor according to Iin. The IL need to be 1.5~2*Iin. For getting higher efficiency, need to use low DRC inductors.**

## INPUT CAPACITOR SELECTION

The input capacitor reduces input voltage ripple to the converter, low ESR ceramic capacitor is highly recommended. For most applications, a 10uF capacitor is used. The input capacitor should be placed as close as possible to VIN and GND. Such as Murata GRM21BR60J106 or TDK C3216X5R1A106M

## OUTPUT CAPACITOR SELECTION

A low ESR output capacitor is required in order to maintain low output voltage ripple. In the case of ceramic output capacitors, capacitor ESR is very small and does not contribute to the ripple, so a lower capacitance value is acceptable when ceramic capacitors are used. A 10uF、22uF or two 10uF ceramic output capacitor is suitable for most applications. Such as Murata GRM21BR60J226\ GRM21BR60J106 or TDK C3216X5R1A226M\ C3216X5R1A106M

## OUTPUT VOLTAGE PROGRAMMING

In the adjustable version, the output voltage is set by a resistive divider according to the following equation:

$$R_1 = R_2 \times \left( \frac{V_{OUT}}{1.2} - 1 \right)$$

Typically choose R2=10K and determine R1 from the following equation:

## OC SETTING( SETTING CURRENT LIMIT)

XR3403 can be adjusted SW current limit by one resistor connected with OC pin。The setting sheet is as below( Vin=3.3V Vout=5V )---Only list the typical Ilim number，the actual data may be in +/- 20% above them because of some discrete data from IC and resistor.

| Rset (ohm) | Ilim(typ) |
|---|---|
| 500K | 2.7A |
| 400K | 2.5A |
| 300K | 2.3A |
| 250K | 2.1A |
| 200K | 1.5A |
| 180K | 1.3A |
| 150K | 1A |
| 120K | 0.7A |
| 100K | 0.45A |

. For 3V~4.2Vin to 5V 1A out , 230K~250Kohm is suitable.

## DIODE SELECTION

According to max Iout and max Vout, you can select suitable diode. Normally we select diode If=(1.5~2)*Ioutmax and VR=(1.5~2)*Voutmax. For high efficiency, suggest that you select low Vf Schottky diode. ONsemi's MBRA210LT3 is prefer

# TYPICAL PERFORMANCE CHARACTERISTICS

(L=2.2uH 4A, CIN=10uF, COUT=2*10uF, if not mentioned)

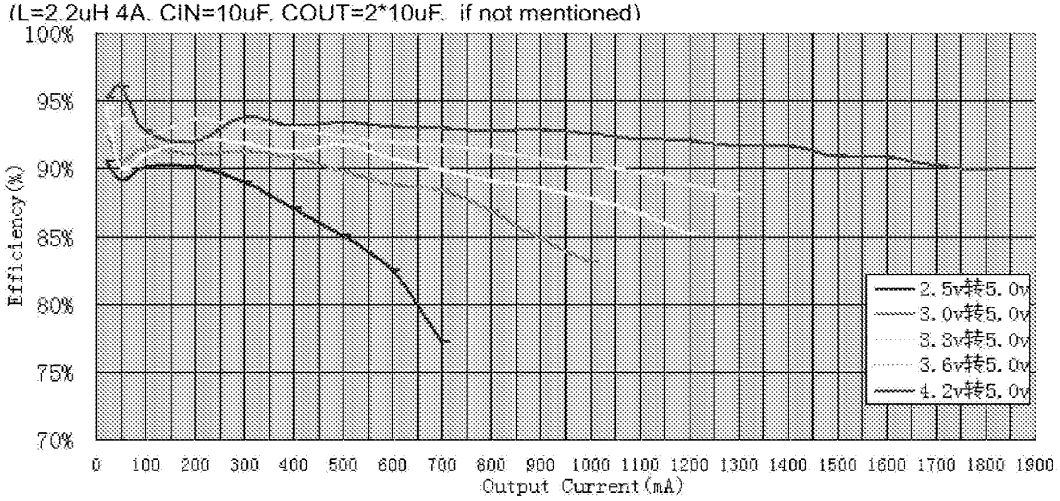


**Efficiency vs. Output Current (Vout=5V Rset=300K)**

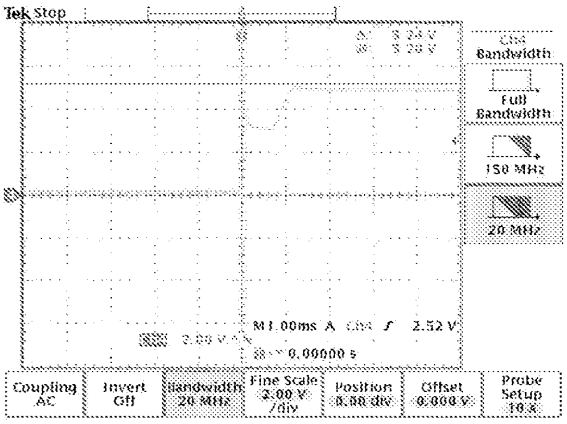


STARTUP (3.3V IN 5V 500MA OUT)

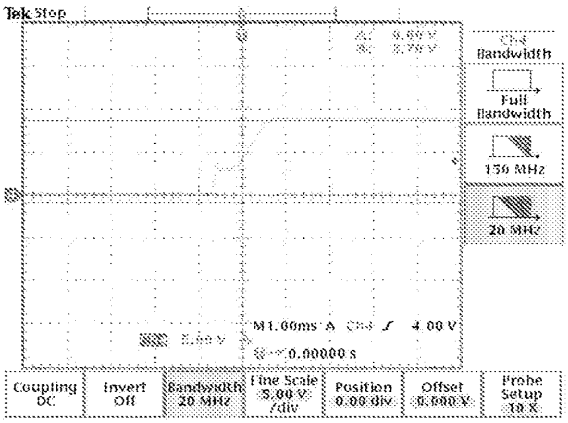


STARTUP(3.3V IN 9V 500MA OUT)



CAR-RPA-ITC-05248



DELTRAN EX1029
IPR2024-01219

## PACKAGE OUTLINE

### SOT23-6 PACKAGE OUTLINE AND DIMENSIONS

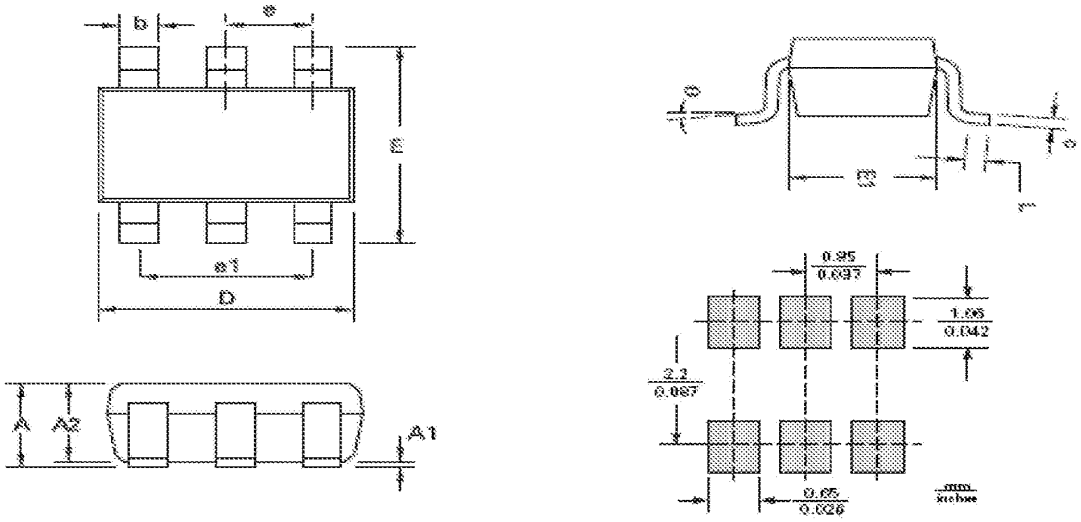


| DIM | Millimeters | | Inches | |
|---|---|---|---|---|
| | Min. | Max. | Min. | Max. |
| A | 0.90 | 1.45 | 0.0354 | 0.0570 |
| A1 | 0.00 | 0.15 | 0.00 | 0.0059 |
| A2 | 0.90 | 1.30 | 0.0354 | 0.0511 |
| b | 0.35 | 0.50 | 0.0078 | 0.0196 |
| C | 0.09 | 0.26 | 0.0035 | 0.0102 |
| D | 2.70 | 3.10 | 0.1062 | 0.1220 |
| E | 2.20 | 3.20 | 0.0866 | 0.1181 |
| E1 | 1.30 | 1.80 | 0.0511 | 0.0708 |
| L | 0.10 | 0.60 | 0.0039 | 0.0236 |
| e | 0.95 REF | | 0.0374 REF | |
| e1 | 1.90 REF | | 0.0748 REF | |
| L | 0° | 30° | 0° | 30° |

**Note:** Controlling dimensions are in millimeters. Approximate dimensions are provided in inches



CAR-RPA-ITC-05249



DELTRAN EX1029
IPR2024-01219