United States Patent [19]

Suzuki et al.

[11] **4,451,743**

[45] **May 29, 1984**

[54] **DC-TO-DC VOLTAGE CONVERTER**

[75] Inventors: **Fuminori Suzuki; Singo Ichikawa,** both of Tanashi, Japan

[73] Assignee: **Citizen Watch Company Limited,** Tokyo, Japan

[21] Appl. No.: **328,990**

[22] Filed: **Dec. 9, 1981**

[30] **Foreign Application Priority Data**

Dec. 29, 1980	[JP]	Japan	55-186857
Dec. 29, 1980	[JP]	Japan	55-186858
Dec. 29, 1980	[JP]	Japan	55-186859
Jan. 23, 1981	[JP]	Japan	56-9180
Jan. 23, 1981	[JP]	Japan	56-9181

[51] **Int. Cl.**[3] **H02M 3/18**

[52] **U.S. Cl.** **307/110;** 363/59; 363/60; 320/1; 323/370

[58] **Field of Search** 307/110; 363/59, 60, 363/61, 62; 320/1; 323/370

[56] **References Cited**

U.S. PATENT DOCUMENTS

4,205,369	5/1980	Asano	363/62
4,321,661	3/1982	Sano	363/60

FOREIGN PATENT DOCUMENTS

2511795	6/1971	Fed. Rep. of Germany	363/60

Primary Examiner—E. A. Goldberg
Assistant Examiner—Derek Jennings
Attorney, Agent, or Firm—Jordan and Hamburg

[57] **ABSTRACT**

A DC-to-DC voltage converter is disclosed for converting the voltage from a battery to provide a power supply voltage whose value can be equal to the battery voltage multiplied by or divided by a non-integral factor, e.g. $\frac{2}{3}$. The converter operates on the principle of capacitor charge switching, and high conversion efficiency is achieved in operation at very low levels of supply current, such as are utilized in an electronic timepiece.

10 Claims, 24 Drawing Figures

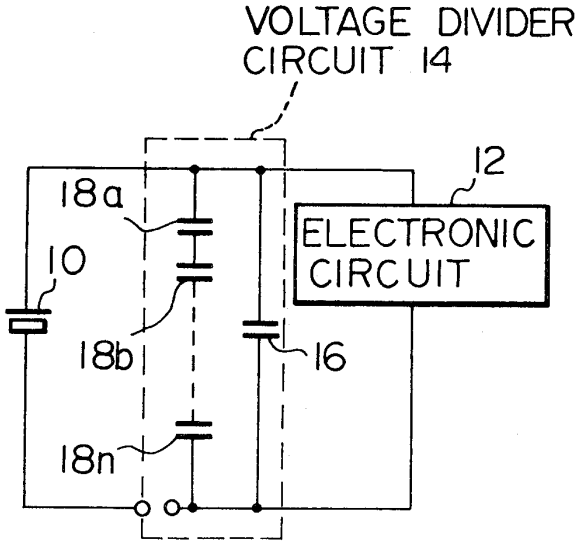

DELTRAN EX1046
IPR2024-01219

Fig. 1A

PRIOR ART

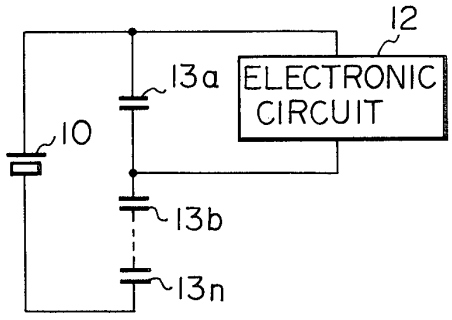

Fig. 1B

PRIOR ART

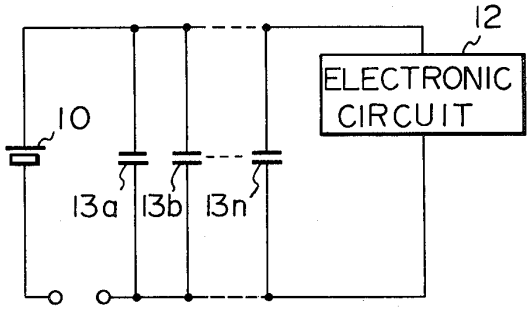

DELTRAN EX1046
IPR2024-01219

Fig. 2A

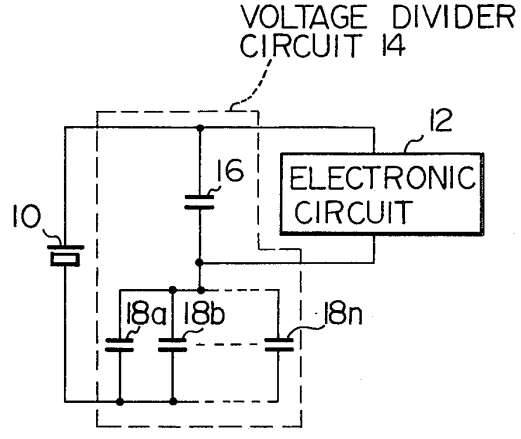

Fig. 2B

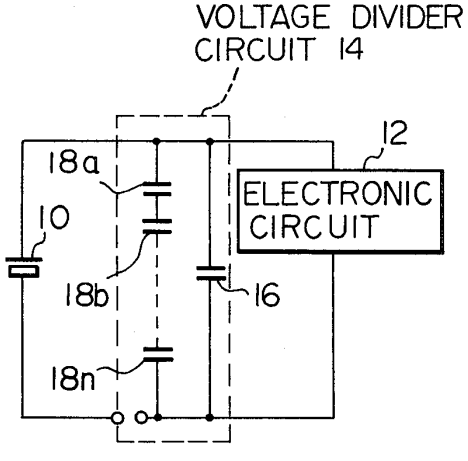

DELTRAN EX1046
IPR2024-01219

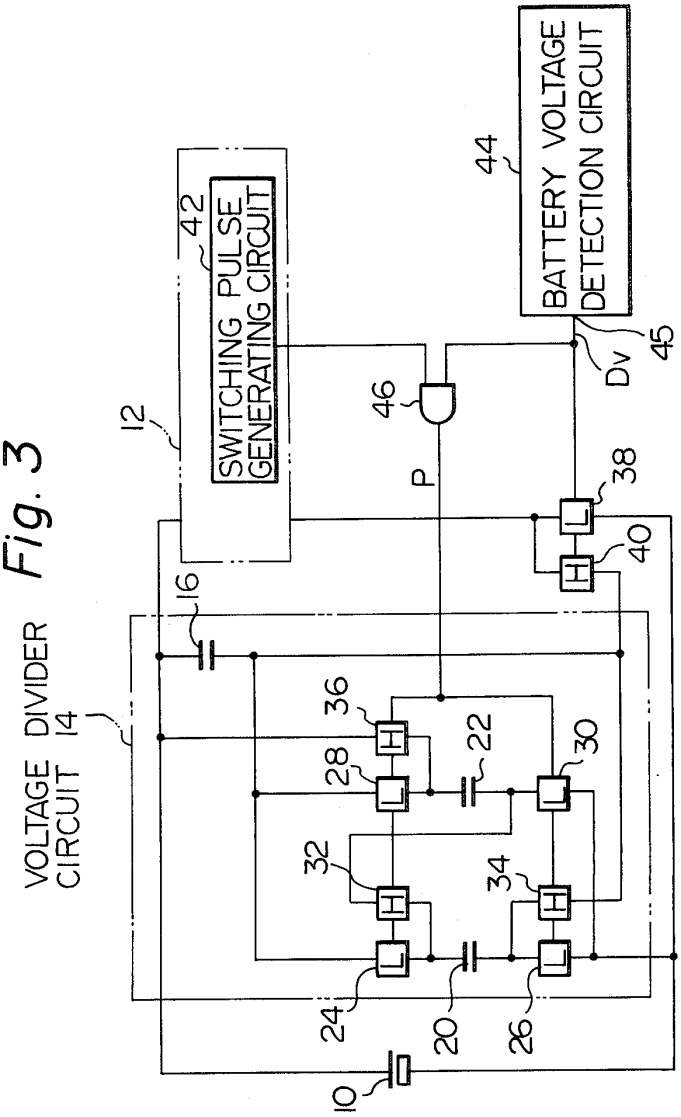

Fig. 3

DELTRAN EX1046
IPR2024-01219

Fig. 4

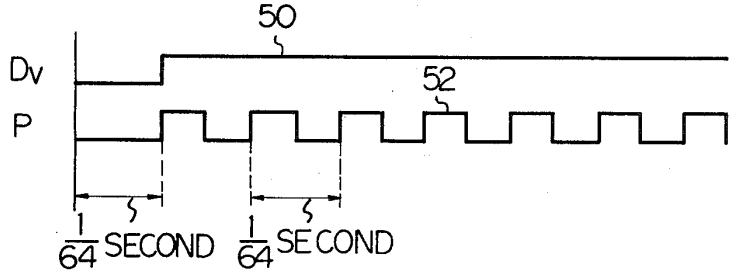

Fig. 5

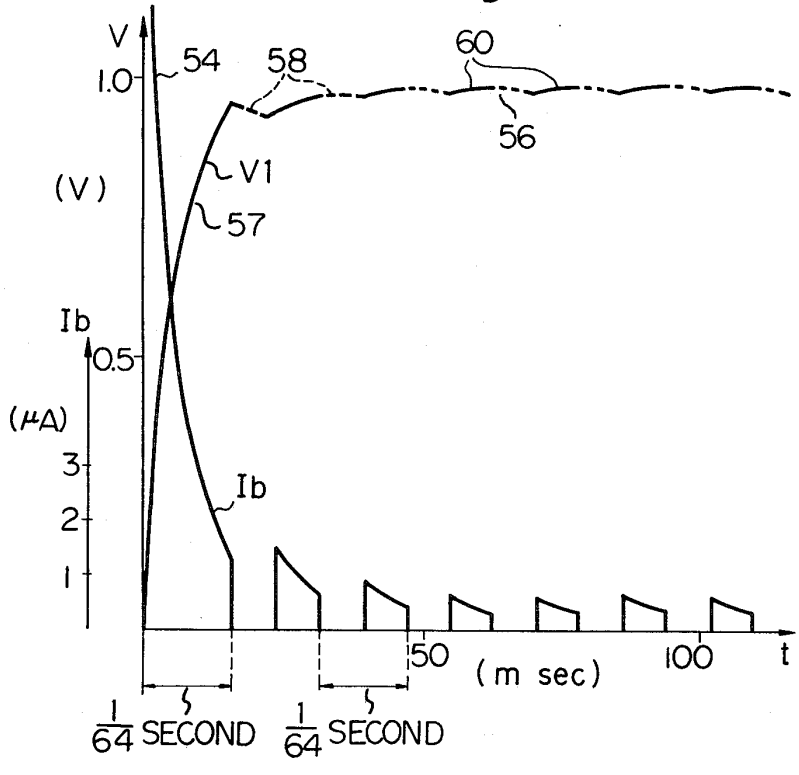

DELTRAN EX1046
IPR2024-01219

Fig. 6

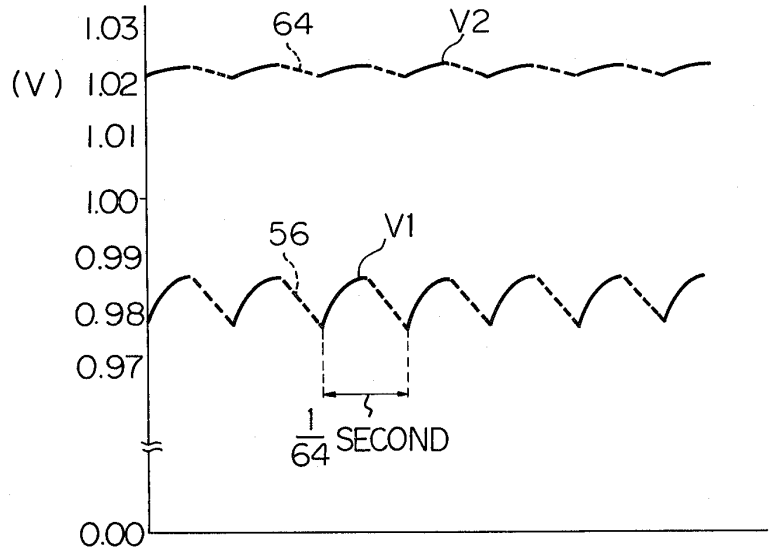

DELTRAN EX1046
IPR2024-01219

Fig. 7A

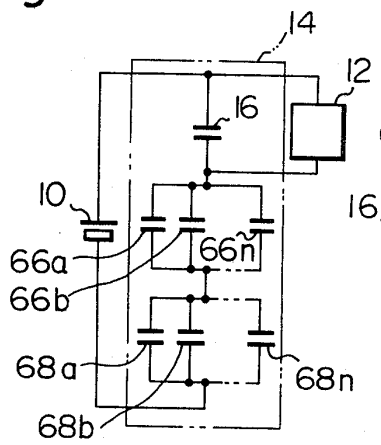

Fig. 7B

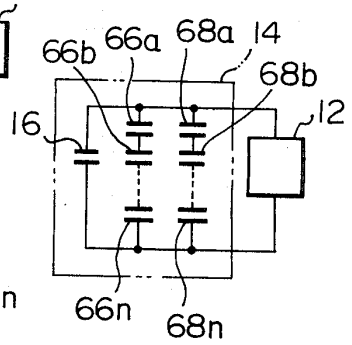

Fig. 8A

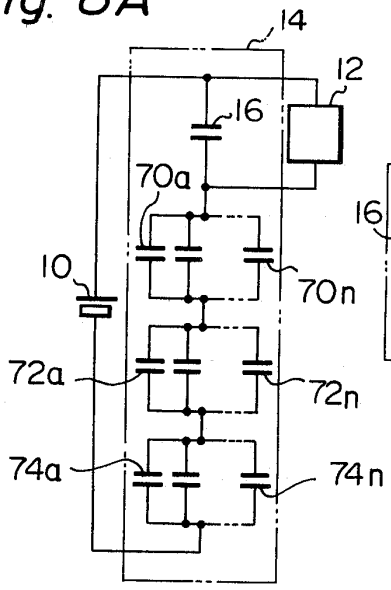

Fig. 8B

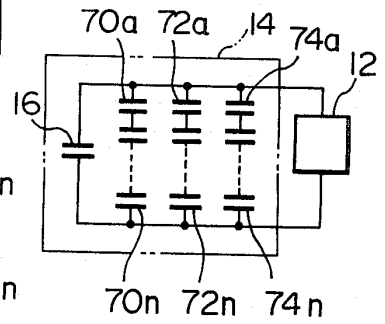

DELTRAN EX1046
IPR2024-01219

Fig. 9A

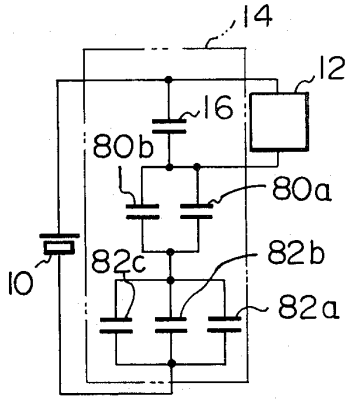

Fig. 9B

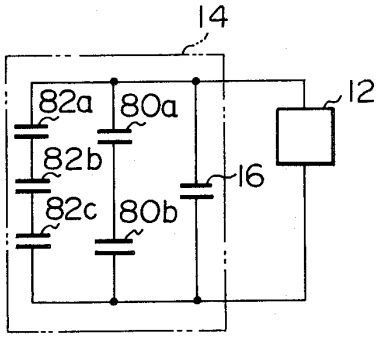

DELTRAN EX1046
IPR2024-01219

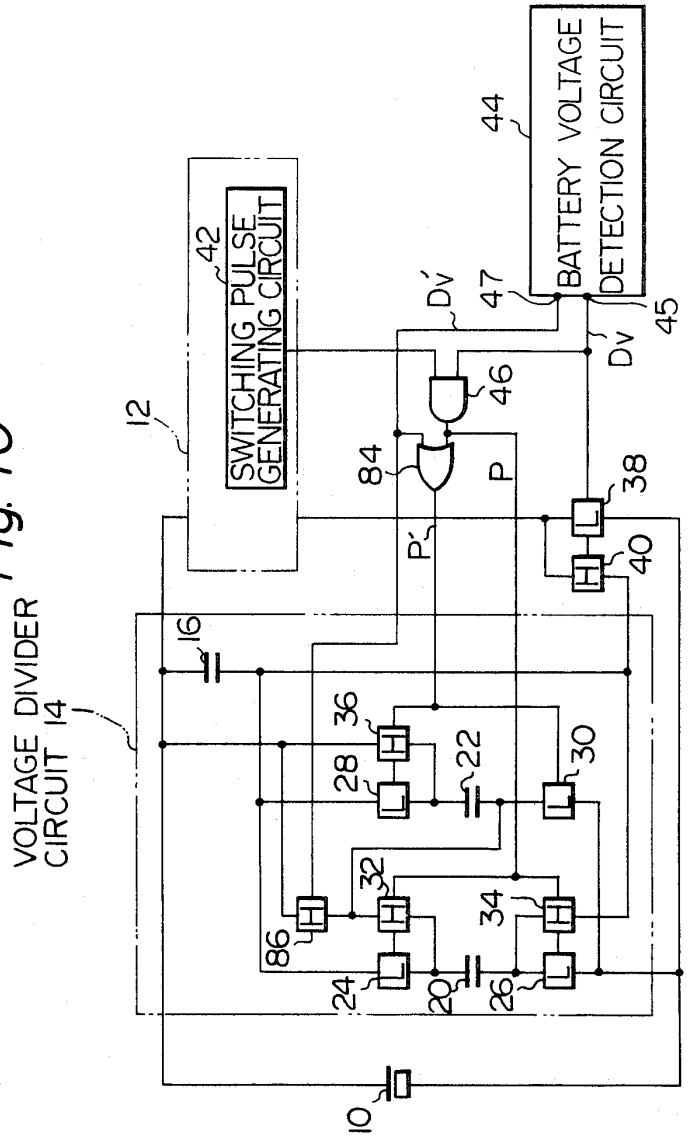

Fig. 10

DELTRAN EX1046
IPR2024-01219

Fig. 11A
PRIOR ART

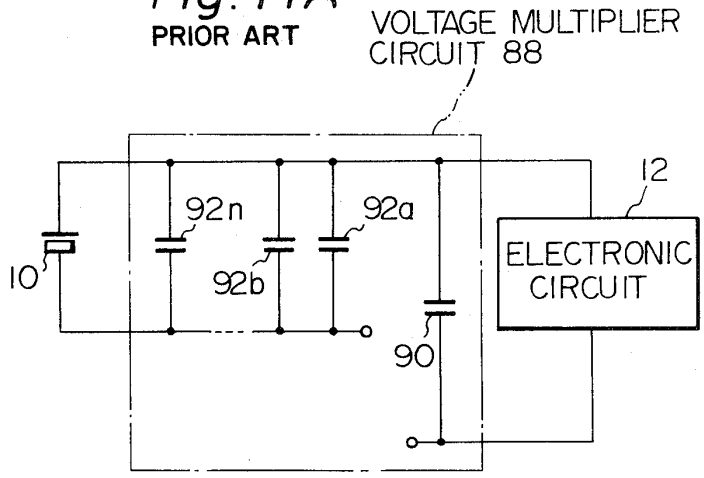

Fig. 11B PRIOR ART

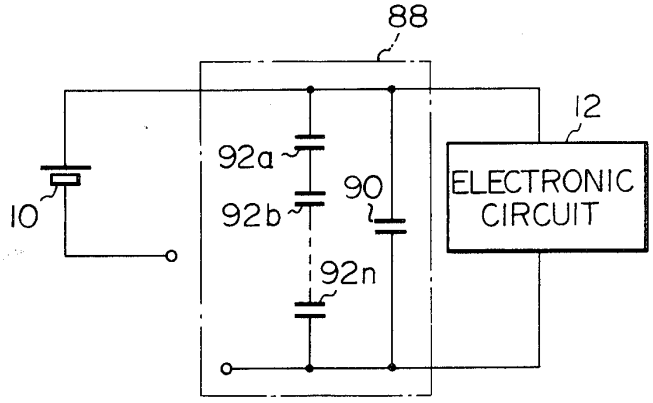

DELTRAN EX1046
IPR2024-01219

Fig. 12A

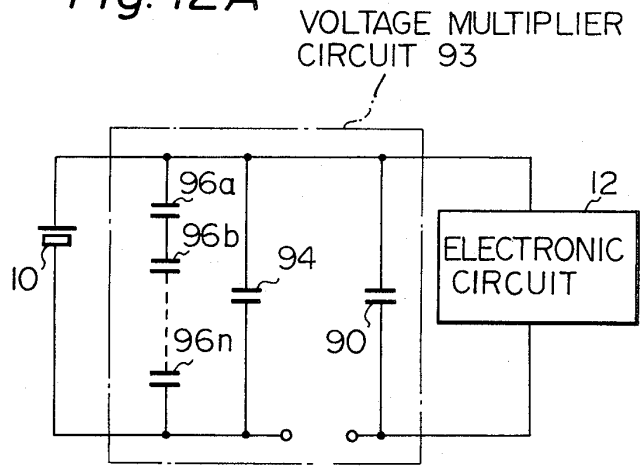

Fig. 12B

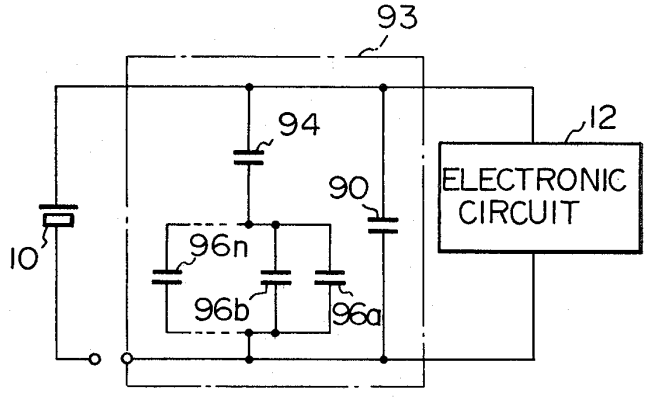

DELTRAN EX1046
IPR2024-01219

Fig. 13A

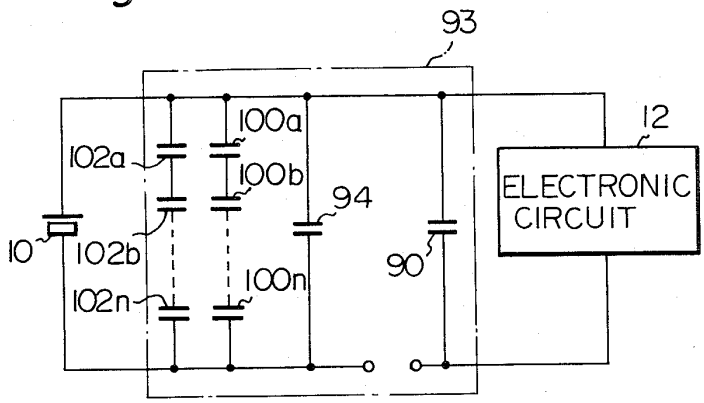

Fig. 13B

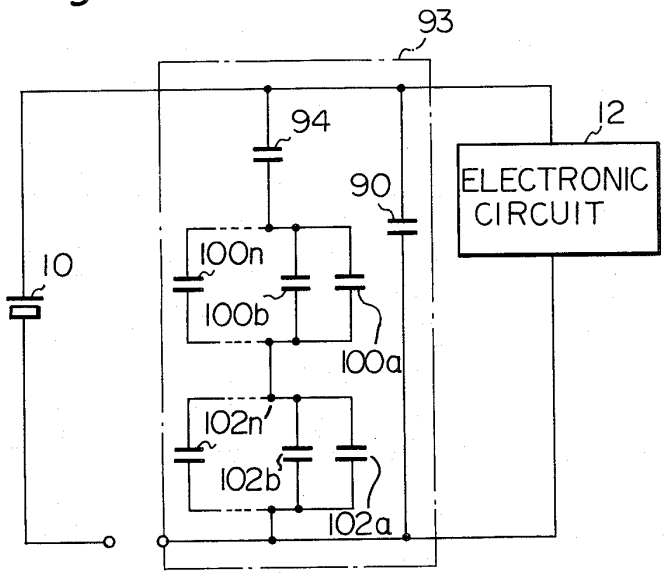

DELTRAN EX1046
IPR2024-01219

Fig. 14A

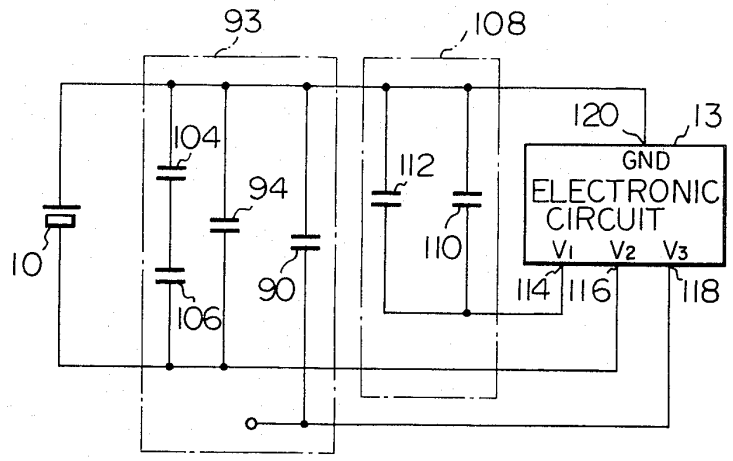

Fig. 14B

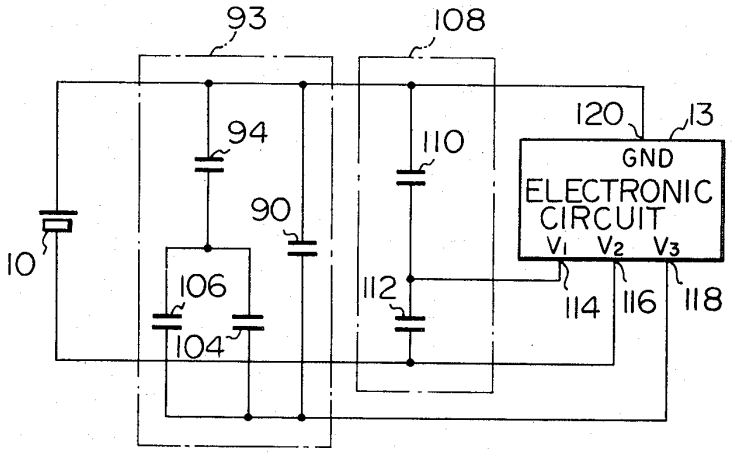

DELTRAN EX1046
IPR2024-01219

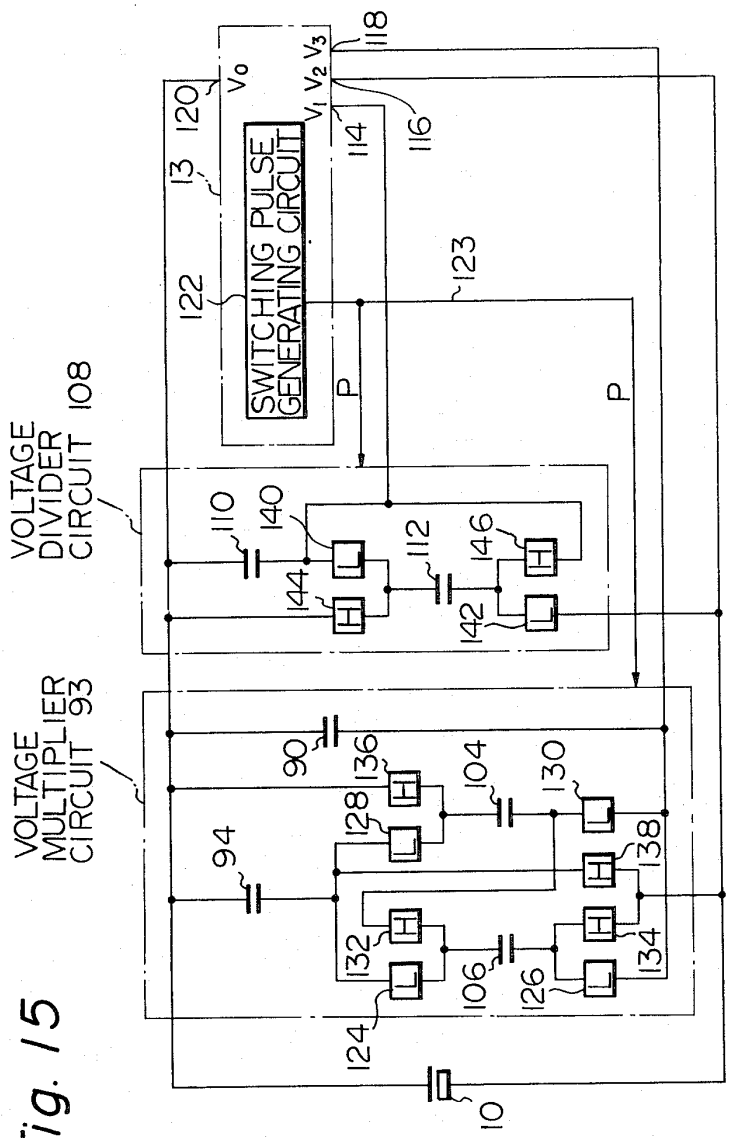

Fig. 15

DELTRAN EX1046
IPR2024-01219

DC-TO-DC VOLTAGE CONVERTER

BACKGROUND OF THE INVENTION

In recent years, there has been an increasing trend toward the use of various types of battery-powered small-size electronic devices, including electronic timepieces, calculators, etc. Such devices have become increasingly practical as a result of various developments in the electronic field, such as the widespread use of CMOS integrated circuits, which have a very low level of power consumption. However in spite of the improved performance of battery-powered devices brought about by such developments, several disadvantages still remain. Even with a low level of circuit current consumption, the voltage produced by a battery will fall throughout its operating life, the resulting variations in the battery voltage being determined by the particular type of battery. In some cases the battery voltage will fall relatively gradually throughout the operating life, while in other cases the voltage will remain relatively constant throughout most of the operating life and then suddenly fall sharply toward a lower level, and remain close to that level up to the end of the battery life. Such variations in battery voltage can have an adverse effect upon the operation of an electronic circuit which is powered by the battery, so that in many cases it is desirable or necessary to provide some means of providing a stable supply voltage from the battery voltage. This can be done by utilizing a conventional type of voltage regulator circuit, in which a control element connected between the battery and the load provides a certain degree of voltage drop, such as to maintain a constant voltage at the load. With such a voltage regulator circuit, the current which flows out of the battery is always equal to or greater than the current which flows in the load, i.e. a certain amount of power is dissipated by the control element in order to provide voltage regulation. However in the case of electronic equipment of small size, powered by a miniature type of battery, for example an electronic timepiece powered by a silver oxide cell, it is essential that power consumption be reduced to the minimum possible level, in order to assure sufficient length of battery life. Thus a conventional type of voltage regulator circuit is not a practicable method of overcoming the effects of variations in battery voltage upon the electronic circuitry supplied by the battery, in such a case. An alternative approach to this problem is to use a charge switching type of capacitor voltage divider known in the prior art and described hereinafter, to convert the battery voltage to provide a supply voltage of lower value, e.g. one half of the battery voltage, and to use this supply voltage to operate an electronic circuit during the first part of the battery life and utilize the battery voltage directly during the last part of the battery life. In this way, a more constant level of supply voltage can be obtained than is available from the battery alone. However, as will be described hereinafter, such a prior art type of capacitor voltage divider circuit can only provide a voltage division ratio which is at most $\frac{1}{2}$, i.e. a voltage division ratio of $\frac{1}{2}$, $\frac{1}{3}$, $\frac{1}{4}$, etc. Thus, for example, it is not possible to provide certain highly desirable values of voltage division ratio, such as for example would enable a voltage of 1 V to be obtained from a 1.5 V silver oxide battery. Thus, although the charge switching capacitor voltage divider circuit has a very high conversion efficiency, it has not been possible hitherto to utilize it for providing

a supply voltage from the battery voltage of miniature electronic device such as an electronic timepiece.

Another requirement which exists at present is for the provision of a plurality of DC supply voltage levels, for the matrix drive circuits of a liquid crystal display device used in a miniature electronic device powered by a small-capacity battery, for example an electronic timepiece or pocket calculator. It is necessary to provide at least three different voltage levels to supply power to such a drive circuit. To obtain these supply voltage levels from a single battery, it is of course possible to use the battery voltage as the highest level and to utilize conventional voltage regulator circuits to provide voltages of lower level than the battery voltage. However, as described above, it is undesirable to use such voltage regulator circuits from considerations of minimizing battery power consumption.

It can therefore be understood that there exists a requirement for some means of converting the voltage of a battery to a higher and/or lower level to provide one or more supply voltages, with a high degree of conversion efficiency even at very low operating power levels, and with a high degree of flexibility in selecting the voltage conversion factor. These requirements are completely met by a DC-to-DC voltage converter circuit according to the present invention. Such a DC-to-DC voltage converter circuit provides the very high level of conversion efficiency of a conventional charge switching capacitor voltage divider circuit, but enables a supply voltage to be produced whose value can be equal to the battery voltage multiplied or divided by a factor which need not be an integer, for example $\frac{2}{3}$, 2/5, etc. A DC-to-DC voltage converter circuit according to the present invention therefore provides means whereby a substantially constant level of supply voltage can be obtained from the battery of a miniature electronic device, or whereby a number of levels of supply voltage can be obtained from a miniature battery, of value greater than or less than the battery voltage, for supplying power to matrix drive circuitry of a liquid crystal display device.

SUMMARY OF THE INVENTION

The present invention relates to a DC-to-DC converter circuit for converting the voltage of a battery to provide a supply voltage having a value different from the battery voltage. More specifically the present invention relates to a DC-to-DC converter having a very high conversion efficiency even at supply currents of the order of a fraction of a microampere, and for which the voltage conversion factor can be flexibly determined to have a suitable value.

A DC-to-DC converter circuit according to the present invention comprises a main capacitor, a plurality of auxiliary capacitors, and electronic switching means for repetitively and alternately connecting the auxiliary capacitors in parallel with one another and (as a parallel-connected group) in series with the main capacitor, and connecting the auxiliary capacitors in series with one another and (as a series-connected group) in parallel with the main capacitor. The voltage division or multiplication factor of the circuit is determined by the number of auxiliary capacitors. Furthermore, a plurality of groups of auxiliary capacitors can be used, and in this case the voltage conversion factor is determined both by the number of groups of auxiliary capacitors and the number of capacitors in each group. The electronic

DELTRAN EX1046
IPR2024-01219

switching means for controlling the interconnections between the main and auxiliary capacitors can conveniently comprise a group of electronic switching elements which are operated by switching signals generated within an electronic circuit powered by the output voltage from the DC-to-DC converter circuit.

BRIEF DESCRIPTION OF THE DRAWINGS

FIGS. **1A** and **1B** are simplified circuit diagrams for illustrating the operation of a prior art type of capacitor voltage divider circuit used for battery voltage step-down conversion;

FIGS. **2A** and **2B** are simplified circuit diagrams for illustrating the principles of operation of a DC-to-DC converter circuit according to the present invention, comprising a voltage step-down circuit;

FIG. **3** is a circuit diagram of an embodiment of a voltage step-down circuit such as is described with reference to FIG. **3**, and having two auxiliary capacitors;

FIG. **4** is a timing diagram for illustrating the operation of the embodiment of FIG. **3**;

FIG. **5** is a diagram illustrating the electrical characteristics of the embodiment of FIG. **3**, with respect to battery current consumption and output voltage;

FIG. **6** is a diagram for illustrating certain of the characteristics shown in FIG. **5** in expanded form, and for illustrating the effects of changes in certain circuit constants upon these characteristics;

FIGS. **7A** and **7B** are simplified circuit diagrams for illustrating the principles of operation of another embodiment of a voltage step-down circuit according to the present invention, in which two groups of auxiliary capacitors are utilized;

FIGS. **8A** and **8B** are simplified circuit diagrams for illustrating the operation of another embodiment of a voltage step-down circuit according to the present invention, in which three groups of auxiliary capacitors are utilized;

FIGS. **9A** and **9B** are simplified circuit diagrams for illustrating the operation of an embodiment of a voltage step-down circuit in which a plurality of groups of auxiliary capacitors with different numbers of capacitors in each group are utilized;

FIG. **10** is a circuit diagram of an embodiment of a voltage step-down circuit according to the present invention in which two different voltage division ratios are selectively employed in accordance with the level of battery voltage, under the control of a battery voltage detection circuit;

FIGS. **11A** and **11B** are simplified circuit diagrams for illustrating the operation of a prior art type of capacitor voltage multiplied circuit, used for battery voltage step-up conversion;

FIGS. **12A** and **12B** are simplified circuit diagrams for illustrating the principles of operation of a DC-to-DC converter circuit according to the present invention, comprising a voltage step-up circuit;

FIGS. **13A** and **13B** are simplified circuit diagrams for illustrating the operation of an embodiment of a voltage step-up circuit according to the present invention, having two groups of auxiliary capacitors;

FIGS. **14A** and **14B** are simplified circuit diagrams for illustrating the operation of a combination of a capacitor voltage divider type of voltage step-down circuit with a voltage step-up circuit according to the present invention, for thereby providing three different supply voltage levels by conversion of a battery voltage; and

FIG. **15** is a circuit diagram of an embodiment of a DC-to-DC voltage conversion circuit operating according to the principles shown in FIGS. **14A** and **14B**.

DESCRIPTION OF THE PREFERRED EMBODIMENTS

Before describing some embodiments of the present invention, a prior art type of capacitor voltage divider circuit will first be described, with reference to FIGS. **1A** and **1B**. FIG. **1A** shows such a circuit in a first operating condition, in which a group of capacitors **13***a*, **13***b*, . . . **13***n* (i.e. a total of n capacitors) are connected in series with one another across a battery **10**, to be charged from battery **10**. A load, comprising an electronic circuit **12**, is connected across one capacitor **13***a*. FIG. **1B** shows the circuit in a second operating condition, in which capacitors **13***a*, **13***b* . . . **13***n* are connected in parallel with one another and in parallel with electronic circuit **12**, while isolated from battery **10**, so that electronic circuit **12** is suppplied with power in the form of discharge current flowing from capacitors **13***a*, **13***b* . . . **13***n*. Such a circuit operates by alternately and repetitively switching over between the states shown in FIGS. **1A** and **1B**. In other words, a charge operation is performed in which an electric charge is stored in capacitors **13***a*, **13***b* . . . **13***n* by current flowing from battery **10**, then the capacitors are isolated from battery **10** and a discharge operation is performed in which current flows into the load, i.e. electronic circuit **12**, as a result of discharge of capacitors **13***a*, **13***b*, . . . **13***n*.

The operation of such a circuit will now be described, assuming that each of capacitors **13***a*, **13***b*, . . . **13***n* has an identical capacitance value, which will be designated as C, with the voltage of battery **10** being designated as Vb. For the state shown in FIG. **1A**, with capacitors **13***a*, **13***b*, . . . **13***n* connected in series across battery **10**, assuming that charging of these capacitors has been completed, the voltage appearing across each capacitor will be equal to Vb/n. When the condition shown in FIG. **1B** is now entered, so that capacitors **13***a*, **13***b*, . . . **13***n* are connected in parallel across electronic circuit **12**, then the voltage across each capacitor will fall from Vb/n to a lower value, which can be designated as Vd. The amount of charge transfer, i.e. capacitative discharge, which then occurs can be designated as Qd, which is given as:

$$Qd = n \times C \times (Vb/n - Vd)$$

When the charging condition shown in FIG. **1A** is now entered, then the amound of charge which must be delivered from battery **10** to raise the voltage across each of capacitors **13***a*, **13***b*, . . . **13***n* from the value Vd back up to the value Vb/n can be designated as Qc. In this case capacitors **13***a*, **13***b*, . . . **13***n* are connected in series with one another, so that the total capacitance which they present to battery **10** is equal to C/n. The amount of change in voltage which takes place across this total capacitance is obtained by subtracting (n×Vd) from the battery voltage Vb. Thus, the value of Qc is given as:

$$\begin{aligned} Qc &= C/n \times (Vb - n \times Vd) \\ &= C \times (Vb/m - Vd) \end{aligned}$$

DELTRAN EX1046
IPR2024-01219

The ratio between Qd and Qc is therefore equal to 1/n. From this it can be understood that under a condition of repetitive alternation between the charge and discharge conditions shown in FIGS. **1A** and **1B** respectively, the ratio between the amount of current drawn from battery **10** and the current which flows into electronic circuit **12** will be equal to 1/n.

Such a capacitor voltage divider circuit provides a very high conversion efficiency, with the amount of current drawn from battery **10** being reduced in proportion to the degree of voltage reduction attained. However the voltage division ratio provided by such a circuit is obviously limited to a certain range of values, of $\frac{1}{2}$ or less (i.e. $\frac{1}{2}$, $\frac{1}{3}$, $\frac{1}{4}$, . . . and so on). This makes such a circuit impractical for certain voltage reduction applications. For example, it is desirable to produce a supply voltage of the order of 1 V from the approximately 1.5 V output of a silver oxide battery, in order to supply power to CMOS circuits in an electronic timepiece powered by such a battery. However with the capacitor voltage divider circuit of the prior art described above, it is only possible to produce a supply voltage of 0.75 V, or 0.5 V or less from a silver oxide battery.

It is of course possible to utilize a conventional type of voltage regulator circuit to produce any desired amount of voltage reduction of a battery voltage. However, such a voltage regulator circuit operates on the basis of a series element connected between the load and the battery, with the amount of voltage drop across this series element being automatically varied such as to provide a constant voltage across the load. The current which flows from the battery and that which flows in the load are essentially equal, with power being dissipated through the voltage drop in the series element. Such dissipation of battery power is unacceptable in certain applications, such as for an electronic timepiece powered by a miniature battery having a very limited capacity.

Thus, the capacitor voltage divider circuit of the prior art can provide a very high conversion efficiency, making it highly suitable in that respect for miniature battery-powered electronic devices, but has the disadvantage that the voltage division ratio cannot be flexibly selected. The voltage regulator type of circuit on the other hand can provide any desired voltage division ratio, but offers too low a conversion efficiency for certain applications. The above disadvantages are overcome by the present invention, as will now be described.

Referring first to FIGS. **2A** and **2B**, simplified circuit diagrams are shown which illustrate the basic principles of operation of a DC-to-DC voltage converter comprising a voltage step-down circuit according to the present invention. As in FIGS. **1A** and **1B**, numeral **10** denotes a battery and numeral **12** an electronic circuit which constitutes a load on the voltage step-down circuit. Numeral **14** denotes a voltage divider circuit comprising a capacitor **16** which is permanently connected in parallel with electronic circuit **12**, and will be referred to as the main capacitor, and a set of capacitors **18***a*, **18***b*, . . . **18***n*, which will be referred to as the auxiliary capacitors. FIG. **2A** illustrates the charging condition of circuit operation, in which auxiliary capacitors **18***a*, **18***b*, . . . **18***n* are connected in parallel with one another, and are connected in series with main capacitor **16**. Battery **10** is connected across the series-connected main and auxiliary capacitors to thereby charge them. For simplicity of description it will be assumed that each of the n auxiliary capacitors is of identical value, as is also main capacitor **16**. However it should be noted that this is no way a necessary prerequisite for such a circuit.

The operation of such a circuit will now be described. During actual operation, rapid and repetitive alternation between the charging condition of FIG. **2A** and the discharge condition of FIG. **2B** takes place, and as a result, a substantially steady-state voltage is developed across main capacitor **16**. This voltage will be designated as Vm. The voltages appearing across auxiliary capacitors **18***a*, **18***b*, . . . **18***n* will be designated as Va, Vb, . . . Vn respectively, and the voltage of battery **10** as Vbt. Since auxiliary capacitors **18***a*, **18***b*, . . . **18***n* are connected in parallel during the charging condition of FIG. **2A**, the voltages developed across each of these capacitors must be identical. Thus, the following relationships are true:

$$Va = Vb = — = Vn$$

$$Vm = Va + Vb + — Vn$$

(as a result of the discharge condition of FIG. **2B**)

$$Vbt = Va + Vm$$

Assuming that there are n auxiliary capacitors **18***a*, **18***b*, . . . **18***n*, and designating the voltage across each of the auxiliary capacitors as Vs, the following relationships are true:

$$Vm = n \times Vs$$

$$Vbt = Vs + Vm = (n+1) \times Vs$$

And thus the voltage division ratio Vm/Vbt is given as:

$$Vm/Vbt = n/(n+1)$$

If (n+1) is designated as N, then the voltage division ratio can be rewritten as (N−1)/N.

Referring now to FIG. **3**, a circuit diagram is shown of an embodiment of a voltage step-down circuit according to the present invention, which operates according to the principles described hereinabove with reference to FIG. **2**. Portions of the circuit of FIG. **3** having identical functions to portions of FIGS. **2A** and **2B** are provided with corresponding reference numerals. In the embodiment of FIG. **3**, two auxiliary capacitors **20** and **22** are utilized. A group of electronic switches **24** to **36** serve to alternately and repetitively connect capacitors **20** and **22** in parallel with one another and in series with main capacitor **16**, and in series with one another and in parallel with main capacitor **16**. For ease of description, the circuit network comprising auxiliary capacitors **20** and **22**, main capacitor **16** and electronic switches **24** to **36** shown within a broken-line rectangle, will be referred to as voltage divider circuit **14**. However it should be understood that voltage divider circuit **14** constitutes only part of the overall voltage dropping circuit, since signals must be applied to operate electronic switches **24** to **36**. Such signals comprise switching pulses, designated as P, which are produced by a switching pulse generating circuit **42** contained in electronic circuit **12** and are transferred through an AND gate **46**. As indicated by the letter L, electronic switches **24**, **26**, **28**, and **30** are of a type which attain the ON (i.e. closed) state when a low logic level potential is applied to a control electrode thereof.

DELTRAN EX1046
IPR2024-01219

As indicated by the letter H, on the other hand, electronic switches **32**, **34** and **36** are of a type which attain the closed state when a high logic level potential is applied to a control electrode thereof. The connections shown in FIG. **3** are intended to indicate that electronic switches **24**, **26**, **28** and **30** are in the closed state when signal P is at the low logic level potential, while electronic switches **32**, **34** and **36** are in the OFF (i.e. open) state, and vice versa. Numeral **38** denotes an electronic switch which is controlled by an output signal Dv from a battery voltage detection circuit **44**. The electronic switch **40** is also controlled by signal Dv. When the voltage of battery **10** is below a certain predetermined level, signal Dv is output by battery voltage detection circuit **44** at the low logic level potential. When the voltage of battery **10** is above this threshold level, signal Dv is output by battery voltage detection circuit **44** at the high logic level potential. To ensure satisfactory operation of the circuit, signal Dv does not go from the low to the high logic level until a predetermined time delay has elapsed. Thus, when battery **10** is first connected into the circuit of FIG. **3**, electronic switch **38** will remain in the closed state for a certain time delay, so that battery **10** is connected directly across electronic circuit **12** during that time. At this time also, electronic switches **24**, **26**, **28** and **30** are in the closed state, so that auxiliary capacitors **20** and **22** are connected in parallel with one another and are connected in series with main capacitor **16**. In this embodiment, each of main capacitor **16** and auxiliary capacitors **20** and **22** has the same value of capacitance. Thus, while signal Dv from battery voltage detection circuit **44** is at the low logic level potential, so that electronic switches **24**, **26**, **28** and **30** are in the closed state and auxiliary capacitors **20** and **22** are connected in parallel with one another and connected in series with main capacitor **16**, the voltage developed across main capacitor **16** will be twice that developed across parallel-connected auxiliary capacitors **20** and **22**, since the effective capacitance developed by the auxiliary capacitors in this case will be double that of main capacitor **16**. It will be assumed that battery **10** in this embodiment is a silver cell, so that main capacitor **16** will become charged to approximately 1 V while each of auxiliary capacitors **20** and **22** will become charged to approximately 0.5 V, immediately after battery **10** is first connected into the circuit. At this time, electronic circuit **12** will start to become operative, since it becomes connected to battery **10** through switch **38**. After a predetermined time delay, signal Dv from battery voltage detection circuit **44** will go to the high logic level potential, thereby enabling switching pulses P to be transferred through AND gate **46**. When signal Dv goes to the high logic level also, electronic switch **38** goes to the open state, and electronic switch **40** enters the closed state, so that electronic circuit **12** is now connected across the output from voltage divider circuit **14** (i.e. across main capacitor **16**) through electronic switch **40**. Thereafter, the voltage dropping operation described hereinabove with reference to FIGS. **2A** and **2B** will begin, with electronic switches **24** to **36** operating under the control of switching pulses P to be repetitively and alternately set into the closed and open states, so that the charging and discharge states described hereinabove will be repetitively and alternately established. During the discharge state, auxiliary capacitors **20** and **22** which have been charged to 0.5 V in the charging state, will be connected in series so that a potential of 1 V is developed across them, and they are connected in parallel with main capacitor **16** across electronic circuit **12**. During a subsequent time interval electronic circuit **12** is isolated from battery **10** and is supplied with power solely by discharge currents flowing from auxiliary capacitors **20** and **22** and main capacitor **16**. The duration of this discharge interval is determined by the repetition frequency of switching pulses P. The level of output voltage produced by voltage divider circuit **14** and the level of a ripple component of this voltage will be determined by the repetition frequency of switching pulses P and the closed state impedances of switches **28** to **36** and **40**, the values of capacitors **16**, **20** and **22**, the impedance of electronic circuit **12**, etc.

The operation of the embodiment of FIG. **3** will now be described with reference to data obtained on the basis of computer simulation. Referring first to FIG. **4**, a timing diagram is shown whose origin on the time axis corresponds to the time of connection of battery **10** to the circuit of FIG. **3**. As shown, output signal Dv from battery voltage detection circuit **44** remains at the low logic level potential for a predetermined delay time, which in this case is 1/64 second, after connection of battery **10**. Signal Dv then goes to the high logic level potential, as indicated by numeral **50**, and thereafter switching pulses P are output through AND gate **46**. In this embodiment, switching pulses P, denoted by numeral **52**, are produced at a repetition rate of 64 Hz. It should be noted that subsequently, if the voltage of battery **10** should fall below the predetermined level thereof, signal Dv from battery voltage detection circuit **44** will return to the low logic level potential, so that electronic circuit **12** will become fixedly connected directly across battery **10**, through electronic switch **38**. However use of a voltage detection circuit is not a necessary feature of this embodiment, and a simple timer circuit can be utilized in place of battery voltage detection circuit **44** in order to provide the required control signal for AND gate **46** and electronic switches **38** and **40** immediately after a battery is connected to the circuit.

FIG. **5** is a graph for illustrating the electrical characteristics of the embodiment of FIG. **3**. Time is represented along the horizontal axis, and the origin of the graph corresponds to the point in time at which battery **10** is connected to the circuit of FIG. **3**. Curve **56** represents the variation of the voltage appearing across the terminals of main capacitor **16**, i.e. the output voltage from voltage divider circuit **14**. The discontinuous set of curves **54** denote the variation of battery current Ib drawn from battery **10**. As shown, when battery **10** is first connected to the circuit of FIG. **3**, the voltage developed across main capacitor **14** rises rapidly, as indicated by portion **57**. This represents the initial charging condition of capacitors **16**, **20** and **22**, and continues until both of signals Dv and P go to the high logic level potential. The voltage divider circuit **14** then enters the discharge condition, causing the output voltage therefrom to fall. The discharge condition is indicated by the broken-line portions of characteristic **56**, as denoted by numeral **58**. After a time interval which is determined by the repetition frequency of switching signal P (i.e. in this embodiment 1/64 second), the charging state is re-entered, causing the voltage characteristic **56** to rise. Such a charging state is denoted by the full line portions, designated by numeral **60**. The slope of characteristic **57** during a charging interval is determined by the values of capacitors **20** and **22** and by

DELTRAN EX1046
IPR2024-01219

the closed state impedance of electronic switches **24**, **26**, **28** and **30**. The slope of characteristic **57** during the discharge state is determined by the impedance of electronic circuit **12** and by the closed state impedance of electronic switches **32**, **34**, **36** and **40**. The following values were used in the computations whereby the characteristics shown in FIG. **5** were derived. A value of 0.01 μF was assumed for each of capacitors **20**, **22** and **16**, and a value of 100 KΩ for the closed state impedance of each of electronic switches **24** to **36**, a value of 10K for the closed state impedance of each of electronic switches **38** and **40**, and the impedance of electronic circuit **12** was assumed to be such that a current of 0.5 microamperes is drawn by that circuit with a supply voltage of 1.5 V, i.e. a resistance of 3 MΩ. The voltage of battery **10** was assumed to be 1.55 V, and the internal resistance of battery **10** was ignored. As can be seen from FIG. **5**, the steady-state voltage which is developed across main capacitor **16**, i.e. the output voltage from voltage divider circuit **14** which is applied to electronic circuit **12**, is approximately 0.98 V. The current Ib which is drawn from battery **10** reaches an average steady-state value of 0.218 microamperes. The current consumed by AND gate **46** and by battery voltage detection circuit **44** has not been included in the computation of Ib. In addition, it may be necessary to use a level converter at the input terminal of AND gate **46** which is connected to switching pulse generating circuit **42**. However battery voltage detection circuit **44** need only be operated intermittently, and the repetition rate of switching pulses P can be made quite low. As a result of this, the current consumed by battery voltage detection circuit **44** and by AND gate **46** will in practice be sufficiently low that it can be ignored. The output voltage of this embodiment, i.e. 0.98 V, is rather less than ⅔ of the battery voltage (1.55 V), so that the circuit does not provide an exact voltage division ratio of n/(n+1) as described for the ideal case of FIGS. **2A** and **2B**. However, if necessary, a slightly higher value of output voltage can be obtained by altering the values of capacitors **16**, **20** and **22** or by using electronic switches having lower values of closed state impedance.

FIG. **6** is a diagram for illustating the steady-state output voltage characteristic of the embodiment of FIG. **3** in expanded form, and for showing the effects of a change in circuit constants. The horizontal is identical to that of FIG. **5**, but begins at a point in time when the output voltage from voltage divider circuit **14** has attained a steady-state condition. The vertical axis scale has been expanded by 10 times. Curve **56** shows the steady-state output voltage characteristic of FIG. **5** in expanded form. If the values of capacitors **20**, **22** and **16** of the embodiment of FIG. **3** are increased to 0.5 μF each, and the value of closed state impedance of each of electronic switches **24**, **26**, **38**, **30**, **32**, **34** and **36** is reduced to 20 KΩ, with all of the other circuit constants left unaltered, then an increased level of steady-state output voltage will be obtained from voltage divider circuit **14**, as is indicated by characteristic **64** in FIG. **6**. This has an average value of approximately 1.022 V. With the changes in circuit constant values described above, the current which is drawn from battery **10** becomes approximately 0.227 microamperes, which is almost identical to the current consumption obtained with the original values of circuit constant. It can thus be understood that although the level of output voltage provided by a voltage dropping circuit according to the present invention can be varied to some extent by changes in circuit constants, there is very little alteration in the level of current consumption from the battery.

This property of a voltage dropping circuit according to the present invention is in contrast to the behaviour of a conventional type of voltage regulator circuit. If the output voltage from such a regulator circuit is assumed to be 1.022 V, with the battery voltage (1.55 V) and electronic circuit load impedance being identical to those of the embodiment of FIG. **3**, then the current drawn from the battery would be 0.341 microamperes. With an output voltage of 0.98 V from such a voltage regulator circuit, on the other hand, the battery current consumption would be 0.327 microamperes. In either case, the battery current consumption using a prior art voltage regulator circuit to perform a voltage dropping function would be at least 1.5 times that of a voltage dropping circuit according to the present invention, i.e. a voltage dropping circuit according to the present invention will consume only ⅔ of the current drawn from the battery by a conventional voltage regulator circuit. It can thus be understood that a voltage dropping circuit according to the present invention provides a considerably higher level of conversion efficiency than can be obtained by a voltage regulator type of circuit.

Embodiments of voltage dropping circuits according to the present invention in which a plurality of groups of auxiliary capacitors are used will now be described. Referring first to FIGS. **7A** and **7B**, simplified circuit diagrams are shown of an embodiment for providing a voltage division ratio of (N−2)/N. In this embodiment, two groups of auxiliary capacitors are used, each group comprising n capacitors. In one group the capacitors are designated as **66***a*, **66***b*, . . . **66***n*, while in the other group they are designated as **68***a*, **68***b*, . . . **68***n*. FIG. **7A** shows the charging state for this embodiment. In this state, the capacitors within each group of auxiliary capacitors are connected in parallel with one another, while each of these groups of auxiliary capacitors and main capacitor **16** are connected in series, across battery **10**. As in the first embodiment, electronic circuit **12** is fixedly connected across main capacitor **16**. In the discharge state, shown in FIG. **7B**, the capacitors within each group of auxiliary capacitors are connected in series with one another and each group is connected in parallel with main capacitor **16** and with electronic circuit **12**, while being isolated from battery **10**. As in the first embodiment, electronic circuit **12** is now supplied with power by discharge currents flowing from main capacitor **16** and from groups of auxiliary capacitors **66***a*, **66***b*, . . . **66***n* and **68***a*, **68***b*, . . . **68***n*. It can easily be shown, by a similar method as was used to derive the voltage division ratio of the embodiment of FIGS. **2A** and **2B**, that repetitive alternation between the charging state of FIG. **7A** and the discharge state of FIG. **7B** will result in a steady-state output voltage applied to electronic circuit **12** such that the voltage division ratio is equal to n/(n+2). If (n+2) is designated as N, then the voltage division ratio can be written as (N−2)/N. It can thus be seen that this embodiment will enable voltage division ratios of ⅓, 2/4, 3/5, 4/6, and so on, to be obtained.

Another embodiment of a voltage dropping circuit according to the present invention is shown in FIG. **8**. This has three groups of auxiliary capacitors each having an identical number of capacitors, i.e. n capacitors. As for the embodiment of FIGS. **7A** and **7B**, the capaci-

DELTRAN EX1046
IPR2024-01219

tors within each group of auxiliary capacitors are connected in parallel with one another during the charging state, and the groups of auxiliary capacitors **70***a*, . . . **70***n*, **72***a*, . . . **72***n*, **74***a*, . . . **74***n* are connected in series with each other and with main capacitor **16** during this charging state, as shown in FIG. **8**A. During the discharge state shown in FIG. **8**B, the capacitors within each group of auxiliary capacitors are connected in series with one another, and each group of auxiliary capacitors is connected in parallel with main capacitor **16** and with electronic circuit **12**. It can easily be shown that in this case a voltage division ratio of (N−3)/N is obtained, where N=(n+3). Thus, voltage division ratios of $\frac{1}{4}$, 2/5, $\frac{3}{4}$, 4/7, . . . and so on can be obtained with this embodiment.

Taking the general case of a voltage dropping circuit according to the present invention having m groups of auxiliary capacitors, each group being composed of an equal number of capacitors, i.e. n capacitors, the voltage division ratio which can be obtained is given by the expression:

$$1/\left(1+\frac{m}{m}\right) = n/(m+n)$$

In order to provide even greater flexibility of choice of voltage division ratio with a voltage dropping circuit according to the present invention, it is possible to use a plurality of groups of auxiliary capacitors, with different numbers of capacitors being contained in each group. Such a case is shown by the embodiment illustrated by the simplified circuit diagrams of FIG. **9**A and FIG. **9**B. Here, a first group of auxiliary capacitors comprises two capacitors **80***a* and **80***b*, while a second group of auxiliary capacitors comprises three capacitors **82***a*, **82***b* and **82***c*. As for the previous embodiments, the capacitors within each group of auxiliary capacitors are connected in parallel with one another during the charging state which is shown in FIG. **9**A, and the groups of auxiliary capacitors are connected in series with a main capacitor **16**. In the discharbge state shown in FIG. **9**B, the capacitors in each group of auxiliary capacitors are connected in series with one another, while the groups of auxiliary capacitors are connected in parallel with main capacitor **16** and with electronic circuit **12**. It can easily be shown that, as a result of repetitive alternation between the charging and discharge states shown in FIGS. **9**A and **9**B, a voltage division ratio, i.e. the ratio between the steady-state voltage developed across main capacitor **16** and the voltage of battery **10**, is given as:

$$\frac{1}{1+\frac{1}{2}+\frac{1}{3}} = 6/11$$

Taking the general case, in which the voltage dropping circuit includes m groups of auxiliary capacitors, each group comprising respectively $n_1, n_2, \ldots n_m$ capacitors, the voltage division ratio obtained is given by the expression:

$$\frac{1}{1+\frac{1}{n_1}+\frac{1}{n_2}+\ldots+\frac{1}{n_m}}$$

In the embodiments described hereinabove of voltage dropping circuits according to the present invention, a single fixed voltage division ratio is obtained in each case. However it is also possible to arrange that a plurality of possible voltage division ratios are made available within such a voltage dropping circuit, and to select suitable voltage division ratios on the basis of the level of battery voltage. In this way, an output supply voltage can be produced which varies in level by a considerably smaller amount than the battery voltage, throughout the lifetime of the battery. An embodiment of such a voltage dropping circuit will now be described with reference to FIG. **10**. In FIG. **10**, components having identical functions to the embodiment of FIG. **3** are identified by corresponding reference numerals. The basic difference between the embodiment of FIG. **10** and that of FIG. **3** is that a second battery voltage detection signal Dv′ is produced by battery voltage detection circuit **44** in addition to detection signal Dv. As in the embodiment of FIG. **3**, signal Dv goes to the high logic level so long as the voltage of battery **10** is above a first predetermined level. Subsequently, when the voltage of battery **10** falls below that predetermined level but is above a second (lower) predetermined level, detection signal Dv′ also goes to the high logic level potential. Other differences between this embodiment and that of FIG. **3** lies in that an electronic switch **86** is provided, coupled across the series connection of electronic switch **36** and capacitor **22** and controlled by detection signal Dv′, and an OR gate **84** is coupled to receive switching signal P from the output of AND gate **46** and also detection signal Dv′. The output signal from OR gate **84**, designated as P′, controls electronic switches **28**, **30** and **36**.

The operation of the embodiment of FIG. **10** will now be described. When battery **10** is first connected to the circuit, both of signals Dv and Dv′ are initially held at the low logic level potential for a predetermined time delay, after which signal Dv goes to the high logic level, as for the embodiment of FIG. **3**. In this condition, the operation of the embodiment of FIG. **10** is identical to that of FIG. **3**, since electronic switch **86** is in the open state and switching pulses P are applied either directly or through OR gate **84** to each of electronic switches **24** to **36**. Thus, as for the embodiment of FIG. **3**, a voltage division ratio of $\frac{2}{3}$ is obtained in this condition. Subsequently when the voltage of battery **10** falls below a first predetermined level, signal Dv′ goes to the high logic level potential, with signal Dv remaining at the high logic level. In this condition, electronic switch **86** is held in the closed state by signal Dv′, while the output signal P′ from OR gate **84** is held at the high logic level so that electronic switches **28** and **30** are held in the open state and switch **36** in the closed state. It will be apparent that auxiliary capacitor **22** is thereby effectively isolated from voltage divider circuit **14** under these conditions, so that now only auxiliary capacitor **20** is alternately and repetitively connected in parallel and in series with main capacitor **16**. The voltage division ratio therefore now becomes $\frac{1}{2}$. Subsequently, when the voltage of battery **10** falls below a second predetermined level (lower than the first predetermined level), detection signal Dv goes to the low logic level potential, so that battery **10** is connected directly across electronic circuit **12** through electronic switch **38**.

From the above, it can be understood that in this embodiment, electronic switches **28**, **30** and **36** serve a dual function, i.e. in addition to forming part of the switch group which acts to alternately and repetitively connect auxiliary capacitors **20** and **22** in parallel with

DELTRAN EX1046
IPR2024-01219

one another and in series with main capacitor **16** and vice versa, when detection signal Dv' is at the low logic level, they also serve to isolate auxiliary capacitor **22** from voltage divider circuit **14** when signal Dv' is at the high logic level.

It will be apparent that by using the basic concepts of the embodiment of FIG. **10**, whereby a plurality of detection signals are output by a battery voltage detection circuit, in accordance with successive changes in the level of battery voltage, the voltage dropping ratio of a voltage dropping circuit in accordance with the present invention can be made to vary in accordance with such changes in battery voltage. In other words, the voltage division ratio can be made to vary for example successively from $\frac{1}{2}$ to $\frac{2}{3}$, $\frac{3}{4}$, and so on, as the battery voltage falls throughout the operating life of the battery. This will enable a substantially constant output supply voltage to be produced by such a voltage dropping circuit over a much longer period of time than has hitherto been possible, due to the very low current consumption which can be attained by such a voltage dropping circuit. In other words, the initial voltage division ratio can be arranged such that the supply voltage produced by voltage divider circuit **14** is close to the output voltage that will be provided by battery **10** towards the end of the battery lifetime. Successive changes in the voltage division ratio will result in the output supply voltage being held substantially close to that value, throughout the life of the battery. In this way, much of the advantages of a regulated power supply can be obtained, but with a considerably lower level of power being dissipated by the power supply circuit.

All of the embodiments of DC-to-DC converters described above have been in the form of voltage dropping circuits. However, a DC-to-DC converter circuit according to the present invention can also be arranged to provide a voltage step-up function, and some embodiments of such voltage step-up circuits will be described in the following.

Before doing so, a prior art type of voltage multiplier circuit utilizing capacitors will first be described, with reference to the simplified circuit diagrams of FIGS. **11**A and **11**B. FIG. **11**A shows the charging state, and FIG. **11**B the discharge state. Numeral **10** denotes a battery, numeral **12** an electronic circuit and numeral **88** which steps up the voltage of battery **10** to provide a supply voltage to power electronic circuit **12**. The voltage multiplier circuit **88** comprises a power supply capacitor **90**, and voltage step-up capacitors **92***a*, **92***b*, . . . **92***n*. For the charging state of FIG. **11**A, capacitors **92***a* to **92***n* are connected in parallel and are charged from battery **10**. In the discharge condition of FIG. **11**B, capacitors **92***a* to **92***n* are connected in series across power supply capacitor **90**, and in this condition power supply capacitor **90** is charged from capacitors **92***a* to **92***n*.

It will be apparent that the voltage multiplication ratio provided by such a circuit will be equal to the number n of voltage step-up capacitors. However, only integral multiples of the battery voltage can be provided by such a circuit. This is disadvantageous for certain applications. For example, if a silver cell having a voltage of 1.5 V is used as the power source for a liquid crystal display cell matrix drive circuit, then a prior art voltage multiplier circuit such as that of FIGS. **11**A and **11**B can be used to provide a voltage multiplication ratios of 2:1 and 3:1. In this way, the three potential levels 1.5 V, 3 V and 4.5 V can be obtained to supply the matrix drive circuit. However if a lithium battery is used as the power source for such a liquid crystal cell matrix drive circuit, with a voltage of 3 V, then although it is simple to provide a 1.5 V potential by voltage division of the battery voltage by conventional divider circuits, it has not been possible hitherto to provide an efficient voltage mulitplier circuit to provide a potential of 4.5 V in such a case. For this reason, it has been customary to use the potential levels of 1 V, 2 V and 3 V, when a lithium battery is used to power a liquid crystal cell matrix drive circuit, since these potentials can be easily provided by voltage division of the battery voltage. However it is highly desirable to be able to use a common type of liquid crystal display cell and matrix drive circuit, irrespective of whether a silver battery or lithium battery is used as the power source, and this has not been possible on a practical basis due to the limitations of prior art types of voltage multiplier circuits. However, with a voltage step-up circuit according to the present invention, a voltage multiplication ratio of 1.5 times can be easily achieved.

An embodiment of a voltage step-up circuit according to the present invention will now be described with reference to the simplified circuit diagrams of FIGS. **12**A and **12**B. The circuit is based on a voltage multiplier circuit **93**, comprising a power supply capacitor **90**, a main capacitor **94**, and a group of n auxiliary capacitors **96***a*, **96***b*, . . . **96***n*. The circuit is powered by a battery **10**, and supplies an output voltage to an electronic circuit **12**. For the charging condition, shown in FIG. **12**A, auxiliary capacitors **96***a* to **96***n* are connected in series with one another and connected in parallel with main capacitor **94**. In this condition, main capacitor **94** and auxiliary capacitors **96***a* to **96***n* are charged from battery **10** and isolated from electronic circuit **12**. In the discharge condition, shown in FIG. **12**B, auxiliary capacitors **96***a* to **96***n* are connected in parallel with one another and are connected in series with main capacitor **94**. In this condition, the main and auxiliary capacitors are isolated from battery **10**, and discharge into power supply capacitor **90**.

If the voltage of battery **10** is designated as Vbt, then for the charging condition shown in FIG. **12**A each of the n auxiliary capacitors **96***a* to **96***n* will become charged to a potential Vbt/n, while main capacitor **94** will become charged to a potential Vbt. In the discharge condition shown in FIG. **12**B, since main capacitor **94** is connected in series with the group of auxiliary capacitors **96***a* to **96***n*, which are connected in parallel with one another, the potential applied to power supply capacitor **90** will be equal to the sum of the voltage across main capacitor **94** and that across each of auxiliary capacitors **96***a* to **96***n*, i.e. will be equal to Vbt+Vbt/n. Thus, the voltage multiplication ratio of this embodiment is (1+1/n):1.

As in the case of the voltage step-down embodiments described hereinabove, the actual voltage conversion ratio may be somewhat lower than that given by the above relationship, due to the effects of switch impedances, the impedance of electronic circuit **12**, etc. However this is also true of a conventional voltage multiplier circuit which employs capacitor charge switching.

All of the capacitors in the circuit of FIGS. **12**A and **12**B can be of identical value, other than the power supply capacitor **90**.

FIGS. **13**A and **13**B are simplified circuit diagrams of another embodiment of the present invention. Here,

DELTRAN EX1046
IPR2024-01219

voltage multiplier circuit **93** comprises a power supply capacitor **90**, main capacitor **94**, a first group of n auxiliary capacitors **100***a*, **100***b*, . . . **100***n*, and a second group of n' auxiliary capacitors **102***a*, **102***b*, . . . **102***n'*, where n and n' may be different. As in the embodiment of FIGS. **12**A and **12**B, voltage multiplication is performed by repetitive alternation between the charging condition shown in FIG. **13**A and the discharge condition shown in FIG. **13**B. Designating the value of voltage from battery **10** as Vbt, the supply voltage produced by voltage multiplier circuit is given as:

$$Vbt+Vbt/n+Vbt/n'$$

Thus, the voltage multiplication ratio is given as:

$$(1+1/n+1/n'):1$$

If n=n', then the voltage multiplication ratio is equal to (1+2/n):1

In general, if n groups of auxiliary capacitors are utilized, with each group comprising n capacitors, a voltage multiplication ratio of (1+n/m):1 is obtained.

It will be apparent that in fact any desired value of voltage multiplication ratio can be obtained by such a circuit, through the use of a plurality of groups of auxiliary capacitors containing different numbers of capacitors, or containing capacitors of differing values.

Referring now to FIGS. **14**A and **14**B, an embodiment of the present invention is shown, whereby the three potential levels 1.5 V, 3 V and 4.5 V can be obtained from a 3 V lithium battery, for supplying power to the matrix drive circuit of a liquid crystal display cell. This embodiment includes a voltage step-up circuit according to the present invention in conjunction with a capacitor type voltage divider circuit known in the prior art and described hereinabove. Numeral **10** denotes a 3 V lithium battery, and numeral **13** an electronic circuit which includes a liquid crystal display cell matrix drive circuit operating from the three potential levels V_1, V_2 and V_3, i.e. 1.5 V, 3 V and 4.5 V respectively. Numeral **93** denotes a voltage multiplier circuit according to the present invention for generating potential V_3, comprising a power supply capacitor **90**, auxiliary capacitors **104** and **106**, and a main capacitor **94**. Numeral **108** denotes a voltage divider circuit for providing potential V_1, comprising voltage dropping capacitors **110** and **112**.

FIG. **14**A shows a condition of this circuit in which charging of voltage multiplier circuit **93** from battery **10** takes place, and discharge from voltage divider circuit **108** takes place with both of capacitors **110** and **112** being connected to terminal **114** of electronic circuit **13**. In the condition shown in FIG. **14**B, voltage multiplier circuit **93** is in the discharge state, and is connected to terminal **118** of electronic circuit **13**, while capacitors **110** and **112** are connected in series across battery **10** to be charged therefrom. As a result of repetitive alternation between the conditions shown in FIGS. **14**A and **14**B, a steady-state potential equal to 1.5 times the voltage V_2 of battery **10** is developed across power supply capacitor **90** of voltage multiplier circuit **93** and is applied to terminal **118** of electronic circuit **13**. The output of voltage divider circuit **118**, applied to terminal **114** of electronic circuit **13**, is 0.5 times the voltage of battery **10**, i.e. V_2.

In the embodiments of FIGS. **14**A and **14**B, the potentials V_1, V_2 and V_3 are −1.5 V, −3 V and −4.5 V respectively. This is for the case of battery **10** being a lithium battery. If a silver battery, having a voltage of 1.5 V is used instead of a lithium battery, it is still possible to produce the above three potential levels −1.5 V, −3 V and −4.5 V, if the circuit of FIGS. **14**A and **14**B is modified to replace voltage divider circuit **108** by a voltage step-up circuit according to the present invention which will provide a 3:1 voltage multiplication ratio. It can thus be understood that use of voltage multiplier circuits according to the present invention will enable a common type of liquid crystal display cell and matrix drive circuit to be used in battery-powered electronic devices, irrespective of the type of battery which is employed.

A more detailed circuit diagram of the embodiment of FIGS. **14**A and **14**B is shown in FIG. **15**. As shown, electronic circuit **13** includes a switching pulse generating-circuit **122** which produces switching pulses P for controlling electronic switches provided in voltage multiplier circuit **93** and in voltage divider circuit **108**. Voltage multiplier circuit **93** includes, in addition to capacitors **90**, **94**, **104** and **106**, a group of electronic switches **124** to **138**. These are responsive to switching pulses P for repetitively and alternately setting auxiliary capacitors **104** and **106** in parallel with one another and in series with main capacitor **94**, and in series with one another and in parallel with main capacitor **94**. Thus, as described hereinabove, a voltage multiplication ratio of 3/2 is obtained, so that a potential of 4.5 V is applied to terminal **118** of electronic circuit **12**. The ratio of 3/2 is obtained since in this case n=2.

Electronic switches **140** to **146** in voltage divider circuit **108** are responsive to switching signal P for alternately and repetitively setting capacitors **110** and **112** in parallel and in series with one another, to be charged from battery **10** and to discharge into electronic circuit **13**, whereby a potential of 1.5 V is applied to terminal **114** of electronic circuit **13**.

From the above description of the preferred embodiments, it can be understood that a DC-to-DC converter circuit according to the present invention can be coupled to a battery for providing a supply voltage whose value is equal to the voltage of the battery multiplied or divided by a factor which can be an integer or non-integer and which can be freely determined by appropriate selection of a plurality of auxiliary capacitors within the DC-to-DC converter circuit. Such a DC-to-DC converter circuit can therefore greatly extend the range of application of electronic devices which can be battery-powered but for which a very low level of power consumption is essential, and can enable identical models of such electronic devices to be powered by different types of batteries, e.g. silver batteries and lithium batteries, without modification to the circuitry thereof.

From the preceding description, it will be apparent that the objectives set forth for the present invention are effectively attained. Since various changes and modifications to the above construction may be made without departing from the spirit and scope of the present invention, it is intended that all matter contained in the above description or shown in the accompanying drawings shall be interpreted as illustrative and not in a limiting sense. The appended claims are intended to cover all of the generic and specific features of the invention described herein.

What is claimed is:

DELTRAN EX1046
IPR2024-01219

1. The combination of a battery voltage detection circuit and a DC-to-DC converter circuit for converting the voltage of a battery for thereby producing a power supply voltage to be applied to a load, said battery voltage detection circuit being operable for producing detection signals in accordance with the value of said battery voltage, said DC-to-DC converter circuit comprising:

a main capacitor;

a plurality of auxiliary capacitors;

a source of switching signals provided by said load; and

switch means responsive to said switching signals for controlling the interconnection conditions between said main capacitor, said auxiliary capacitors, said load and said battery such as to repetitively and alternately establish a first operating condition in which said auxiliary capacitors are connected in parallel with one another and are connected in series with said main capacitor and a second operating condition in which said auxiliary capacitors are connected in series with one another and are collectively connected in parallel with said main capacitor, said switch means being coupled to said auxiliary capacitors and responsive to said detection signals for selectively varying the number of said auxiliary capacitors effectively functioning in said DC-to-DC converter circuit, for thereby varying the value of the ratio between said supply voltage and said battery voltage in a manner to compensate for changes in said battery voltage.

2. A DC-to-DC converter circuit for converting the voltage of a battery for thereby providing a first and a second power supply voltage to be applied to first and second input terminals of a load respectively, the value of said first power supply voltage being equal to said battery voltage multiplied by a factor of 3/2 the value of said second power supply voltage being equal to one half of said battery voltage, comprising:

a source of switching signals provided by said load;

a power supply capacitor fixedly connected across said first input terminals of said load;

a main capacitor;

a pair of auxiliary capacitors;

a first group of electronic switches coupled to control the interconnection conditions between said main capacitor, said auxiliary capacitors, said battery and said first input terminals of said load, and responsive to said switching signals for establishing a first operating condition in which said auxiliary capacitors are connected in parallel with one another and are collectively connected in series with said main capacitor across said first input terminals of said load while being disconnected from said battery, and a second operating condition in which said auxiliary capacitors are connected in series with one another and are collectively connected in parallel with said main capacitor across said battery while being disconnected from said first input terminals of said load, said first group of electronic switches acting to repetitively and alternately establish said first and second operating states for thereby developing said first power supply voltage across said first input terminals of said load;

first and second voltage dropping capacitors, said first voltage dropping capacitor being fixedly connected across said second input terminals of said load; and

a second group of electronic switches coupled to control the interconnection conditions between said first and second voltage dropping capacitors, said battery and said second input terminals of said load in response to said switching signals for thereby repetitively and alternately establishing a first operating condition in which said first and second voltage dropping capacitors are connected in series across said battery and a second operating condition in which said first and second voltage dropping capacitors are connected in parallel across said second input terminals of said load, whereby said second power supply voltage is developed across said second input terminals of said load.

3. A DC-to-DC converter circuit according to claim 2, in which said load comprises an electronic circuit and in which said source of switching signals comprises a switching signal generating circuit forming a part of said electronic circuit.

4. A DC-to-DC converter circuit according to claim 3, in which said battery is a lithium battery.

5. A DC-to-DC converter circuit according to claim 4, in which said electronic circuit comprises a matrix drive circuit for a liquid crystal display device.

6. A DC-to-DC converter circuit for converting the voltage of a battery for thereby producing a power supply voltage to be applied to a load, comprising:

a main capacitor, said main capacitor being fixedly connected in parallel with said load;

a set of n auxiliary capacitors each having a value of capacitance equal to that of said main capacitor wherein "n" is an integer;

a source of switching signals provided by said load; and a plurality of electronic switch means responsive to said switching signals for controlling the interconnection conditions between said main capacitor, said auxiliary capacitors, said load and said battery such as to repetitively and alternately establish a first operating condition in which said n auxiliary capacitors are connected in parallel with one another and are connected in series with said main capacitor and a second operating condition in which said n auxiliary capacitors are connected in series with one another and are collectively connected in parallel with said main capacitor, to thereby establish a value of said power supply voltage which is substantially equal to said battery voltage multiplied by a factor which is a function of n, during said first operating condition said auxiliary capacitors being connected in parallel with one another and being connected as a group in series with said main capacitor across said battery to be charged therefrom, and during said second operating condition, said auxiliary capacitors being disconnected from said battery and being connected in series with one another and connected as a series-connected group in parallel with said main capacitor, to thereby establish a value of said supply voltage which is substantially equal to said battery voltage multiplied by a factor $n/(n-1)$.

7. A DC-to-DC converter circuit according to claim 6, and further comprising a power supply capacitor fixedly connected across said load, and in which said auxiliary capacitors are arranged as a set of m groups, and in which during said first operating condition the auxiliary capacitors of the respective groups are connected in series with one another and said m groups are

DELTRAN EX1046
IPR2024-01219

disconnected from said load and connected in parallel with one another and with said main capacitor across said battery to be charged thereby, and in which during said second operating condition the capacitors of each of said groups of auxiliary capacitors are respectively connected in parallel with one another and said groups of auxiliary capacitors connected in series with one another and said main capacitor across said load, with said main capacitor and auxiliary capacitors being disconnected from said battery.

8. A DC-to-DC converter circuit according to claim **6**, and further comprising electronic switch means coupled to said auxiliary capacitors for selectively varying the number of auxiliary capacitors effectively functioning in said DC-to-DC converter circuit, for thereby varying the value of said supply voltage.

9. A DC-to-DC converter circuit for converting the voltage of a battery for thereby producing a power supply voltage to be applied to a load, comprising:

a power supply capacitor fixedly connected in parallel with said load;

a main capacitor;

a set of n auxiliary capacitors each having a value of capacitance equal to that of said main capacitor wherein "n" is an integer;

a source of switching signals provide by said load; and

a plurality of electronic switch means responsive to said switching signals for controlling the interconnection conditions between said main capacitor, said auxiliary capacitor, said load and said battery such as to repetitively and alternately establish a first operating condition in which said n auxiliary capacitors are connected in parallel with one another and are connected in series with said main capacitor and a second operating condition in which said n auxiliary capacitors are connected in series with one another and are collectively connected in parallel with said main capacitor, to thereby establish a value of said power supply voltage which is substantially equal to said battery voltage multiplied by a factor which is a function of n, during said first operating condition said auxiliary capacitors being connected in parallel with one another and being connected as a group in series with said main capacitor, with said main capacitor and auxiliary capacitors being disconnected from said battery; and further during said second operating condition said auxiliary capacitors being connected in series with one another and being connected as a group in parallel with said main capacitor and in parallel with said battery to be charged therefrom, with said main capacitor and auxiliary capacitors being disconnected from said load to thereby establish a value of said supply voltage which is substantially equal to said battery voltage multiplied by a factor of $(1+1/n)$.

10. A DC-to-DC converter circuit for converting the voltage of a battery for thereby producing a power supply voltage to be applied to a load, comprising:

a power supply capacitor fixedly connected across said load;

a main capacitor;

a set of n auxiliary capacitors each having a value of capacitance equal to that of said main capacitor and in which said auxiliary capacitors are arranged as a set of m groups wherein "n" and "m" are integers;

a source of switching signals provided by said load; and

a plurality of electronic switch means responsive to said switching signals for controlling the interconnection conditions between said main capacitor, said auxiliary capacitors, said load and said battery such as to repetitively and alternately establish a first operating condition in which said n auxiliary capacitors are connected in parallel with one another and are connected in series with said main capacitor and a second operating condition in which said n auxiliary capacitors are connected in series with one another and are collectively connected in parallel with said main capacitor, to thereby establish a value of said power supply voltage which is substantially equal to said battery voltage multiplied by a factor which is a function of n, during said first operating condition the auxiliary capacitors of the respective groups being connected in series with one another and said m groups being disconnected from said load and connected in parallel with one another and with said main capacitor across said battery to be charged thereby, and during said second operating condition the capacitors of each of said groups of auxiliary capacitors being respectively connected in parallel with one another and said groups of auxiliary capacitors being connected in series with one another and said main capacitor across said load, with said main capacitor and auxiliary capacitors being disconnected from said battery, each of said groups of auxiliary capacitors containing an indentical number s of capacitors wherein "S" is an integer, whereby the value of said supply voltage is established which is substantially equal to said battery voltage multiplied by a factor $(1+s/m)$.

* * * * *

DELTRAN EX1046
IPR2024-01219