UNITED STATES PATENT AND TRADEMARK OFFICE

BEFORE THE PATENT TRIAL AND APPEAL BOARD

ADC SOLUTIONS AUTO LLC,
Petitioner

v.

THE NOCO COMPANY,
Patent Owner.

Case IPR2024-00671
U.S. Patent No. 11,584,243

PATENT OWNER'S PRELIMINARY RESPONSE

TABLE OF CONTENTS

EXHIBIT LIST iv
I. INTRODUCTION 1
A. The State Of The Art 3
B. The Invention Claimed In The ’243 Patent 4
C. The Challenged Claims 7
II. The Asserted Prior Art 8
1. Richardson 9
2. Zhao 9
3. Dao 10
4. Yu 10
5. Paparrizos 11
III. THE PROSECUTION HISTORY 12
A. The Parent Application’s Claim Related To USB Charging Features Was Held Patentable In IPR2020-00944 12
B. The Patent Office Considered Prior Art Related To Generic USB Charging Apparatuses Before Allowing The ’243 Patent 14
C. The Examiner Was Already Familiar With Prior Art That Disclosed USB Input Charging From The Prosecution Of The Related ’023 Patent 18
IV. CLAIM CONSTRUCTION 24
V. PERSON OF ORDINARY SKILL IN THE ART 25
VI. THE BOARD SHOULD DENY INSTITUTION UNDER SECTION 325(d) 25
A. Step 1: *Advanced Bionics* Favors Denying Institution Under § 325(d) Because The Same Or Substantially The Same Art Or Arguments Were Previously Presented To The Office 29
1. The Office already expressly considered Richardson, and Yu is substantially the same as Richardson 29

2. Petitioner's arguments using Zhao and Paparrizos substantively mirror those involving Tinaphong and Lenk during the prosecution of the related '023 Patent 31

3. In addition to expressly considering Lenk in the prosecution of the related '023 Patent, the Office considered numerous other disclosures that describe input charging via a DC-DC boost converter 35

B. Step 2: Given That Substantially The Same Art Was Presented To The Office, *Advanced Bionics* Favors Denying Institution Under § 325(d) Since Petitioner Has Failed To Meet Its Burden To Demonstrate Material Error By The Office 39

VII. PETITIONER HAS FAILED TO MEET ITS BURDEN TO DEMONSTRATE THAT THERE IS A REASONABLE LIKELIHOOD THAT IT WILL PREVAIL ON THE ASSERTED GROUNDS 42

A. The Petition Fails To Adequately Explain Why A POSITA Would Have Modified The System Of Richardson In Grounds 1 And 2 43

B. The Petition Fails To Adequately Explain How A POSITA Would Have Modified The System Of Yu In Grounds 3 And 4 47

VIII. CONCLUSION 50

CERTIFICATE OF WORD COUNT 51

CERTIFICATE OF SERVICE 52

EXHIBIT LIST

Exhibit No.	Description
Ex. 2001	U.S. Pat. App. Pub. No. 2011/0175461 ("Tinaphong")
Ex. 2002	U.S. Pat. No. 9,506,446 ("Xinfang")
Ex. 2003	U.S. Pat. App. Pub. No. 2013/0154550 ("Balmefrezol")
Ex. 2004	U.S. Pat. No. 11,447,023 (the "'023 Patent")
Ex. 2005	Application file history of '023 Patent
Ex. 2006	U.S. Pat. App. Pub. No. 2012/0187897 ("Lenk")
Ex. 2007	Respondent's Opening Claim Construction Brief (Public Version), *Certain Portable Battery Jump Starters and Components Thereof (II),* Inv. No. 337-TA-1359 (U.S. International Trade Commission)
Ex. 2008	U.S. Pat. No. 7,017,055 ("Ho")
Ex. 2009	U.S. Pat. No. 8,786,247 ("Ishino")
Ex. 2010	WIPO Pub. No. 2015/195321
Ex. 2011	U.S. Pat. App. Pub. No. 2008/0157732
Ex. 2012	G.B. Pat. App. No. 2,265,267

All emphasis has been added and all internal citations have been omitted unless otherwise indicated.

I. INTRODUCTION

U.S. Patent No. 11,584,243 (the "'243 Patent"), owned by The NOCO Company ("Patent Owner" or "NOCO" or "applicant"), discloses and claims a portable vehicle jump starter that includes a universal serial bus (USB) input circuit for charging its internal battery pack. In this manner, the invention provides flexible and convenient ways to recharge portable vehicle jump starters. While USB charging of small electronics devices is ubiquitous nowadays and was understood back in July of 2014 (the effective filing date of the '243 Patent), the idea of using USB—which has a limited power output—to charge a large-capacity battery of a jump starter was not only unheard of, but counterintuitive. As a result, the Patent Office allowed the '243 Patent after a robust and thorough examination that included multiple Office Actions, claim amendments, and Information Disclosure Statements submitted by applicant.

ADC Solutions Auto LLC ("Petitioner" or "ADC") now seeks a do-over of the rigorous examination performed by the Office. Like the Office, ADC is unable to present any prior art that teaches or suggests using USB to charge a jump starter device. Instead, Petitioner relies on prior art describing generic USB charging techniques, unrelated to jump starters. But the Examiner already expressly considered whether a skilled artisan would have been motivated to combine a jump starter with generic USB charging disclosures in both the prosecution history of the

’243 Patent as well as that of a related application. Specifically, in the prosecution of U.S. Pat. 11,447,023 (the “’023 Patent”), which shares a parent application and from which the ’243 Patent is terminally disclaimed, the same Examiner considered substantially similar prior art and arguments to those presented in the Petition. Yet the Petition entirely fails to address the prosecution of the related ’023 Patent, even though Petitioner is simultaneously challenging this related patent in IPR2024-00577.

Petitioner argues against the application of § 325(d) by misleadingly isolating a single feature of the claims—a boost converter that increases the input voltage—that was supposedly missing from the prior art considered by the Office. But Petitioner fails to mention that numerous references considered in the prosecution histories also disclose boost conversion of an input voltage, including at least one of the references (Lenk) that was expressly evaluated by the same Examiner during the prosecution of the ’023 Patent. In other words, the supposed “missing link” put forth by Petitioner was not missing at all. In actuality, Petitioner is asking the Board to revisit prior-art combinations that are substantially the same as those already considered by the Patent Office, and without showing any material error by the Office.

In addition to seeking a second bite at the apple by relying on cumulative prior art, Petitioner also fails to demonstrate a reasonable likelihood of prevailing with

respect to at least one claim. All asserted grounds suffer from the same substantive defect: the Petition focuses on combining USB charging with a hypothetical jump starter system, rather than the actual prior-art jump starter systems being relied on. This misstep represents a second, separate basis by which the Board should decline to institute *inter partes* review of the '243 Patent.

A. The State Of The Art

As explained in the '243 Patent, portable booster devices, often referred to as jump start devices or jump starters, include a high-discharge rechargeable battery that can be connected in circuit with the vehicle's battery through a pair of cables in order to jumpstart the vehicle. *See* Ex. 1001, 1:13-16. Previously, recharging a jump starter powerful enough to jump start a 12-volt car battery relied on a high-power charger through a specialized 12-volt plug connector, such as a barrel charger. While various attempts were made to address problems associated with traditional jump starters (*e.g.*, safety concerns due to improper usage) before the '243 Patent, "each of the prior art solutions suffer[ed] from other shortcomings, either in complexity, cost or potential for malfunction." *Id.*, 3:12-15. Thus, at the time of filing, there remained a need for further improvements to vehicle jump start devices. *Id.*, 1:41-45.

B. The Invention Claimed In The ’243 Patent

Recognizing the need for improved jump starter devices, NOCO developed a “Jump Starting Device With USB” that greatly reduced the complexity and potential for malfunction associated with its usage through a variety of included advancements. Ex. 1001, Title. The ’243 Patent discloses techniques that, for example, “prevent[] the lithium battery pack from being connected to the vehicle battery 72 when the terminals of the battery 72 are connected to the wrong terminals of the booster device.” *Id.*, 4:40-43. As shown in Figure 1 below, the ’243 Patent also discloses that a “USB charge circuit 52 converts power from any USB charger power source, charge voltage and current for charging the lithium battery pack 32,” (*id.*, 5:24-26):

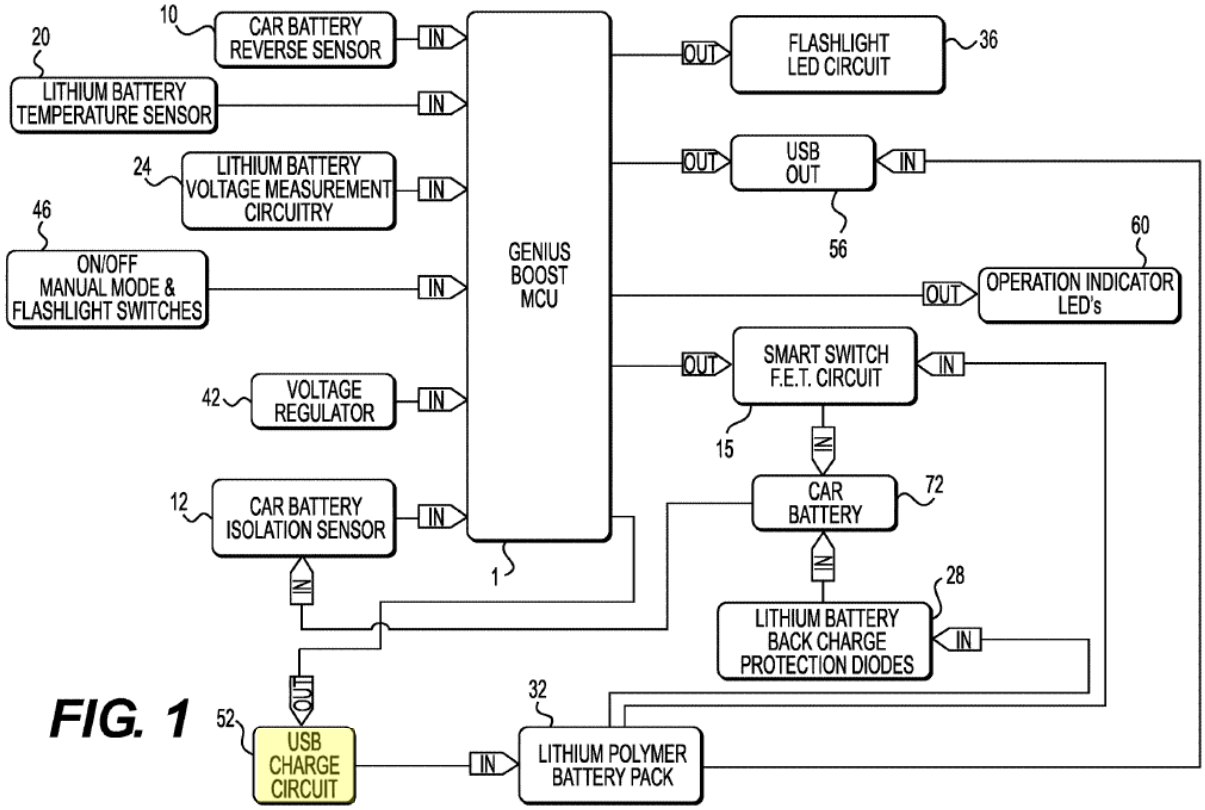

FIG. 1

Id., Fig. 1 (color annotation added).

Beneficially, "[t]he USB charge circuit 52 allows the internal lithium battery pack 32 to be charged using a standard USB charger." *Id.*, 7:32-33. In other words, in order to further simplify the user experience, the "charge input uses a standard micro-USB connector 48 allowing standard cables to be used." *Id.*, 7:34-35. The micro-USB connector (item 48) described in the '243 Patent for charging the lithium polymer battery pack is included in the USB charge circuit (item 52) depicted by Figure 2C:

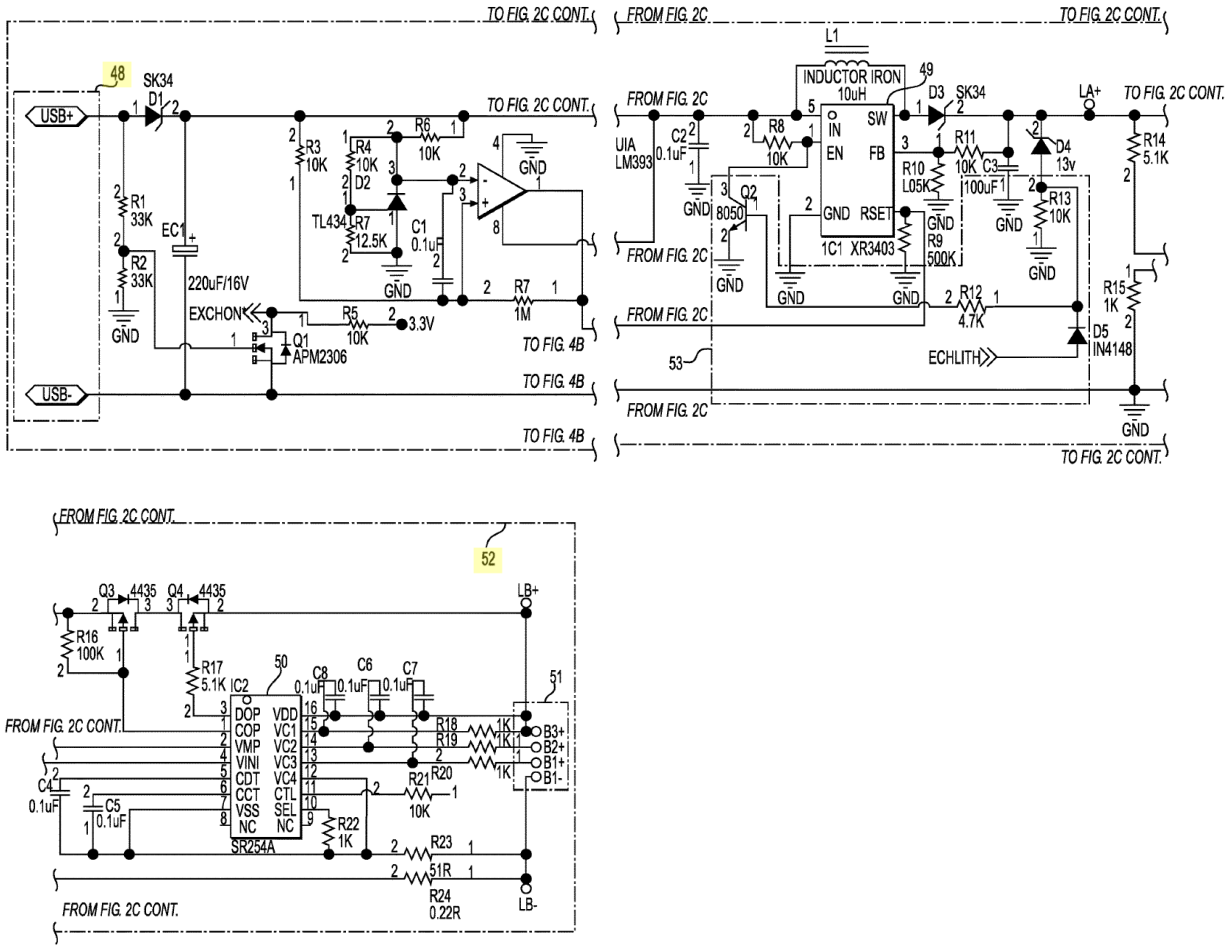

Id., Fig. 2C (color annotations added).

The jump starter of the ’243 Patent relies on the limited charging capabilities of a standard USB charger even though, “[a]t the heart of the handheld battery booster is a lithium polymer battery pack 32, which stores sufficient energy to jump start a vehicle engine served by a conventional 12 volt lead-acid or valve regulated lead-acid battery.” *Id.*, 4:15-19. The ’243 Patent even illustrates the large size of the battery pack by providing an example configuration: “three 3.7V, 2666 mAh lithium polymer batteries in a 3S1P configuration.” *Id.*, 4:21-22. In order to permit

the jump starter to be charged using a USB cable, "[t]he 5V potential provided from standard USB chargers is up-converted to the 12.4 VDC voltage required for charging the internal lithium battery pack using a DC-DC converter 49." *Id.*, 7:35-38. The advancement of using a USB type connector to charge a portable jump start device, as well as various components like the DC-DC converter that make this solution possible, are captured in the claims of the '243 Patent.

C. The Challenged Claims

The Petition challenges claims 1, 2, 15, 17, 18, 51, 54, and 57 of the '243 Patent. Petition, p. 7. Claim 1 recites:

> 1. A jump starting device for boosting or charging a depleted or discharged battery having a positive battery terminal and a negative battery terminal, the jump starting device comprising:
>
> a power supply;
>
> a positive battery connector for electrically connecting the jump starting device to the positive battery terminal of the depleted or discharged battery;
>
> a negative battery connector for electrically connecting the jump starting device to the negative battery terminal of the depleted or discharged battery;
>
> a power switch or switch circuit connected in circuit with the power supply and the positive and negative battery connectors, the power switch or switch circuit configured to switch power on from the power supply to boost or charge the depleted or discharged battery when connected between the positive and negative battery connectors;
>
> a USB input connector; and
>
> a USB charge circuit electrically connecting the USB input connector to the power supply, the USB charge circuit comprising a

> DC-DC converter configured to upconvert voltage from the USB input connector to the power supply.

Ex. 1001, 8:24-8:47.

All challenged claims depend from claim 1 with the exception of independent claim 57. *Id.*, 12:25-52. Claim 57 captures a jump starting apparatus or device that, similar to claim 1 above, includes a USB input connector and a USB charge circuit configured to up-convert the voltage from the USB input connector to the power supply. *See id.*, 8:24-12:52.

II. THE ASSERTED PRIOR ART

Petitioner asserts five references across its four grounds:

- U.S. Patent Publication No. 2013/0154543 A1 ("Richardson") (Ex. 1005);
- U.S. Patent No. 9,391,467 B2 ("Zhao") (Ex. 1006);
- U.S. Patent Publication No. 2013/0241488 A1 ("Dao") (Ex. 1031);
- Chinese Utility Model Patent No. CN 203211234 U ("Yu") (Ex. 1007; Ex. 1008); and
- U.S. Patent No. 9,219,372 B2 ("Paparrizos") (Ex. 1009).

As further detailed below, none of these references teach or suggest a method or apparatus for charging a jump starter using a USB connection, and these references are cumulative to the prior art already considered during prosecution

that separately describes generic jump starter systems and generic USB charging techniques.

1. Richardson

Richardson is titled "Method And Apparatus For Providing Supplemental Power To An Engine." Ex. 1005, p. 1. Richardson was cited and relied upon by the Patent Office as the primary reference in numerous rejections during the prosecution of the '243 Patent. *See, e.g.*, Ex. 1002, pp. 438-463. Richardson discloses a large "supplemental power source (jump starter)" for use in commercial applications. Ex. 1005, ¶ [0014]. Richardson's jump starter is "useful when starting fleets of vehicles with dead batteries" since the device may be "rapidly recharged to start many vehicles in a row." *Id.*, ¶ [0055]. While the Petition relies on Richardson to teach numerous elements of claim 1, as recognized numerous times by the Office during prosecution, Richardson fails to disclose either the use of a USB input charger or boost conversion of an input charge. *See* Ex. 1005; Ex. 1002, p. 440.

2. Zhao

Zhao (Ex. 1006) is titled "Step-Up Battery Charging Management System And Control Method Thereof." Ex. 1006, p. 1. Zhao discloses "a step-up battery charging management system," (*id.*, 1:14-15), that may "receive DC input voltage V_{in} and may generate an output signal by boosting DC input voltage V_{in}." *Id.*, 3:1-3. Zhao states that the "DC input voltage V_{in} can be provided to the step-up converter

by a universal serial bus (USB) charger, or any other suitable low voltage power supply system." *Id.*, 3:8-10. Zhao does not teach or suggest applying its techniques to charge a vehicle jump starter or comparable device. *See* Ex. 1006.

3. Dao

Dao (Ex. 1031) is titled "Portable Power Supply." Ex. 1031, p. 1. Dao was considered by the Patent Office during prosecution and published on the face of the '243 Patent. Ex. 1001, p. 3. Dao discloses a "portable power supply" that "may include a lithium-ion battery pack." Ex. 1031, ¶ [0016]. Dao notes that "the portable power supply may be configured for use as a jump starter," (*id.* at ¶ [0018]), and that its "apparatus may include at least one USB output connection." *Id.*, ¶ [0008]. Similar to Richardson, Dao fails to teach or suggest the use of a USB input charger, and instead describes a "charging unit 106" that "may accept an A/C voltage input 104, such as an 110V or 220V input provided through a connection to a wall socket." *Id.*, ¶ [0022]; *see id.* ¶ [0016].

4. Yu

Yu (Ex. 1007; Ex. 1008) is titled "Automotive Emergency Starting Device." Ex. 1008, p. 1. Yu was considered by the Patent Office during prosecution and published on the face of the '243 Patent. Ex. 1001, p. 4. Yu discloses "an emergency automotive starting device" having various components, including "an internal battery, a charging input interface, a display module, a control module, a relay, input

buttons and an output terminal." Ex. 1008, Abstract. Similar to Richardson, Yu fails to teach or suggest the use of a USB input charger, and instead depicts the use a traditional barrel charger:

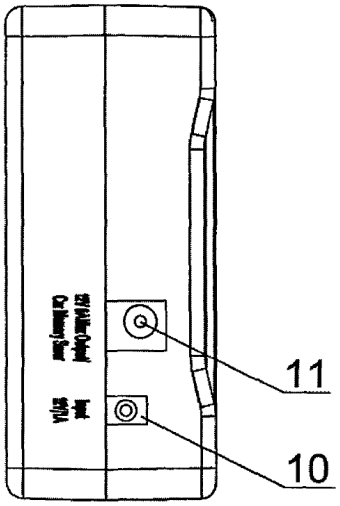

Fig.9

Ex. 1008, Fig. 9.

5. Paparrizos

Paparrizos (Ex. 1009) is titled "Buck Boost Charging For Batteries." Ex. 1009, p. 1. Paparrizos seeks to solve the problem that "[c]omputer tablets and other mobile devices, such as mobile phones, digital SLR cameras, video recorders, audio devices, and so on are moving to battery packs with two (or more) Li-ion cells in series" but "since a large majority of USB devices are defined at 5V, it may not be possible to charge high voltage (>5V) 2S or 3S battery packs using a typically [sic] USB power source." *Id.*, 1:9-26. In order to address this issue, Paparrizos discloses that a "battery charging circuit may operate in buck mode (power stepped down) or

boost (power stepped up) mode." *Id.*, 1:34-36. Paparrizos further discloses that the charged device "may be a smartphone, personal data assistant, portable computer, computing tablet, digital imaging devices, audio devices, and so on." *Id.*, 2:26-29. Paparrizos does not disclose applying its techniques to charge a vehicle jump starter or comparable high power device. *See* Ex. 1009.

III. THE PROSECUTION HISTORY

The Petition provides a limited overview of the prosecution history, dismissing the care taken by the Patent Office and misrepresenting the proceedings in IPR2020-00944, which challenged claims of a parent application to the '243 Patent. *See* Petition, 12-19.

A. The Parent Application's Claim Related To USB Charging Features Was Held Patentable In IPR2020-00944

The '243 Patent is a continuation application that claims priority back to, among other applications, U.S. Patent Application No. 14/325,938, which issued as U.S. Patent No. 9,007,015 ("'015 Patent"). During the prosecution of the '243 Patent, all claims of the '015 Patent were previously challenged in IPR2020-00944, which resulted in a Final Written Decision ("'015-FWD") finding all claims unpatentable (Ex. 1014, p. 2), with the exception of claim 11:

> The apparatus of claim 1, further comprising a USB charging port configured to provide charging power from an external power source to said internal power supply.

Ex. 1013, 9:1-3. Specifically, while the prior art applied (which was based on

Richardson) did not include USB charging features and instead used non-USB, 14V 1A input ports, the petitioner still argued that:

> It would be *readily apparent* from the references that a USB port, which is simply a different physical plug and socket combination from the round plug and socket used in the Epower-20 and 21 products, *could also be incorporated* into portable jump starters in place of or in addition to the 14V 1 A input port to charge the internal batteries of jump starter devices. *A POSITA would be motivated to provide such a USB charging port to provide the added convenience to users of using another commonly used power input for charging the jump starter device*.

Ex. 1014, p. 92 (emphasis in original).

The Board determined that "Petitioner's articulation of a motivation for one with ordinary skill in the art to incorporate a USB input charging port in Richardson based on Epower-20's or Epower-21's disclosure is conclusory." *Id.* In particular, the '015-FWD stated that Petitioner's expert "does not identify any jump starter device having a USB input charging port." *Id.*, p. 93. The '015-FWD continued to explain:

> The matter is much more complicated than what Petitioner's argument makes it out to be. There is insufficient accounting by Petitioner of the expectation at the time of one with ordinary skill in the art about the ease or difficulty in locating a usable source to provide input charge to a USB port on a jump starter.

Id. Although Patent Owner had submitted "reasons why it would not have been obvious to one with ordinary skill in the art to include in a jump starter a USB input charging port," the board found that it "need not discuss Patent Owner's showings

with regard to claim 11, because, . . . Petitioner has not established obviousness of claim 11 over the applied references." *Id.*, p. 94.

The '015-FWD, including its findings with respect to the USB charging features of claim 11, were subsequently *affirmed* as patentable by the Federal Circuit. *The NOCO Company, Inc. v. Shenzhen Carku Technology Co., Ltd.*, Appeal Nos. 2022-1646, 2022-1741, Dkt. 54 at 2 (Fed. Cir. Feb. 12, 2024) (Ex. 1015).

B. The Patent Office Considered Prior Art Related To Generic USB Charging Apparatuses Before Allowing The '243 Patent

The prosecution of the '243 Patent was thorough and searching. The Patent Office considered numerous prior-art references and applied many of them to the claims throughout the lengthy prosecution history. In fact, the file history for the '243 Patent is so extensive—*spanning 2,300+ pages*—that Petitioner was forced to break it up into five separate files for filing with the Board. Moreover, the Examiner that allowed the '243 Patent was aware of numerous additional references that were expressly considered in parent applications for similar claims, as will be further discussed.

The '243 Patent issued from U.S. Patent Application No. 16/820,040, which was filed on March 16, 2020. Ex. 1001, p. 1. Dependent claim 11 of the originally-filed application required "a USB charging port configured to provide charging power from an external power source to said internal power supply." Ex. 1002,

p. 38. A preliminary amendment was made to the application (*see id.*, pp. 79-91) prior to issuance of the first Office Action on September 7, 2021. *Id.*, pp. 440-469. The preliminary amendment canceled the original claims, and added a single new independent claim, which required a "USB charging input" limitation, as well as several dependent claims relating to USB charging features. *Id.*, p. 80. As part of the first Office Action, independent claim 24 was rejected by the Patent Office based on a combination of Richardson and U.S. Pat. Pub. No. 2011/0175461 (Ex. 2001, "Tinaphong"). Additionally, dependent claim 29, which further required that "the DC-DC converter is configured to convert 5V potential provided from a USB charger to 12.4 VDC" was rejected over a combination of Richardson, Tinaphong, and U.S. Pat. No. 9,506,446 (Ex. 2002, "Xinfang"). *See id.*, p. 463.

In response to this Office Action, applicant amended independent claim 24 to include both (1) a "USB charge circuit" having "a DC/DC converter" and being "configured for converting power from a USB charger to increase charge voltage for charging the power supply," and (2) a "USB charging input." Ex. 1002, pp. 485-486. Among other arguments accompanying the amendment, applicant addressed the combination of Richardson and Tinaphong by explaining that Tinaphong is nonanalogous art:

> The apparatus of Tinaphong is an energy harvesting apparatus, and not disclosed as being a jump starter or for use as a jump starting apparatus. Further, the apparatus of Tinaphong cannot be practically used as a

> jump starting device due to the low voltage output (i.e. 5 volts) of the apparatus (see paragraph [0042]), which is too low to effectively provide power to a depleted or discharged 12V battery (e.g. the charging rate would be too slow to charge the 12V vehicle battery to jump start a vehicle). Thus, Tinaphong is clearly non-analogous prior art, and one skilled in the art would not turn to Tinaphong to attempt to modify and/or improve the jump starter of Richardson.

Ex. 1002, pp. 475-476. Applicant also explained that one would not have combined Tinaphong with Richardson because its input voltage is down converted (i.e., changed from 5 volts to 3.7 volts, which is even less suitable for charging a 12 volt battery):

> Specifically, Tinaphong teaches applying a second stage DC-to-DC converter circuit 22 acting as a low drop out, step down voltage converter/regulator to convert the 5 volt DC signal provided on the USB charger input connector 24 from an external source to a 3.7 volt DC signal on the output of the second DC-to-DC converter circuit used to charge the lithium polymer battery 18 (see paragraph [0040]).
>
> Dropping down the voltage as taught by Tinaphong is the exact opposite and wrong direction to the requirement of stepping up or increasing the charging voltage to charge the internal lithium polymer battery 18 of Tinaphong to at least 12 V so that the apparatus could be modified to become or be used as a jump starter as asserted in this rejection.

Ex. 1002, p. 476.

With respect to the rejection of dependent claim 29 in view of Richardson, Tinaphong, and Xinfang, applicant explained that Xinfang "does <u>not</u> disclose a USB input port," but instead relies on "a female barrel type power <u>input</u> connector." *Id.*, pp. 478-479 (emphasis in original). Applicant explained that, consequently,

"***Xinfang*** does not add anything relevant to cure the deficiencies of Richardson and Tinaphong." *Id.*, p. 480.

The Patent Office responded to the amendment incorporating the USB charging features by issuing a final Office Action on March 15, 2022 containing prior art rejections based on Richardson in view of U.S. Pat. Pub. No. 2013/0154550 (Ex. 2003, "Balmefrezol"). Ex. 1002, pp. 601-635. In particular, the Office argued that Balmefrezol cured the deficiencies of Richardson with respect to the USB input charging limitations.

Following an interview with the examiner, applicant then responded to the final Office Action by amending the claims to overcome outstanding rejections under 35 U.S.C. 112 and adding in new independent claim 80. *Id.*, pp. 1776-1799. As part of this response, applicant explained why Balmefrezol was also non-analogous prior art:

> The power management circuit of Balmefrezol is for charging a low voltage internal battery (e.g. 3.5V) of a portable electronic device such as a mobile phone. Balmefrezol does <u>not</u> disclose the power management circuit being applied to a jump starter using a relatively higher voltage (e.g. 11.1V or higher). The power management circuit of Balmefrezol cannot be used to charge, for example, an internal rechargeable battery of a jump starting device, since the power management circuit of Balmefrezol is configured for down-converting (i.e. decreasing or bucking) the voltage from the USB interface (e.g. about 5V) to the internal battery of the mobile phone (e.g. 3.5V) instead of up-converting (i.e. increasing or boosting) the voltage from the USB interface (e.g. USB connector) to the power supply (e.g. rechargeable lithium ion battery) of the jump starting device.

Ex. 1002, pp. 1797-1798 (emphasis in original).

Following this amendment, the Office issued another non-final Office Action, with new rejections based on the prior-art combination of Richardson and U.S. Pat. No. 10,087, 904 ("Butler"). *Id.*, pp. 1914-1953. In a subsequent response, applicant explained that Butler "does not qualify as prior art" since the effective filing of the '243 Patent predated Butler's effective filing date. *Id.*, pp. 2043-2047. Following a subsequent amendment to address typographical errors (*Id.*, pp. 2155-2156) and a terminal disclaimer to overcome a double patent rejection over U.S. Pat. 11,447,023 (*Id.*, p. 2139), the application was allowed (*Id.*, pp. 2233-2240) and the '243 Patent issued on February 21, 2023. *Id.*, p. 2305.

C. The Examiner Was Already Familiar With Prior Art That Disclosed USB Input Charging From The Prosecution Of The Related '023 Patent

The '243 Patent issued from a continuation application of U.S. Patent Application No. 15/691,884. Ex. 1001, p. 1. Related U.S. Pat. 11,447,023 (Ex. 2004, the "'023 Patent") also issued from a continuation application of U.S. Patent Application No. 15/691,884. Ex. 2004, p. 2. Moreover, the '023 Patent issued a mere five months before the challenged '243 Patent, and both of these applications were examined and allowed by the same examiner: M Baye Diao. Ex. 2004, p. 1. As discussed above, the '243 Patent was allowed only after a terminal disclaimer was submitted to overcome a double patenting rejection over the related '023 Patent.

See Ex. 1002, p. 2139. Given the shared examiner, the familial relationship, and the similar claim language between these two patents, the file history of the ’023 Patent is highly relevant to any analysis under 35 U.S.C. § 325(d). Indeed, in many ways the prosecution history of the related ’023 Patent closely mirrors that of the challenged ’243 Patent.

The related ’023 Patent issued from U.S. Patent Application No. 16/450,422, which was filed on June 24, 2019. Ex. 2004, p. 1. Similar to the challenged ’243 Patent, dependent claim 11 of the originally-filed application for the ’023 Patent required “a USB charging port configured to provide charging power from an external power source to said internal power supply.” Ex. 2005, p. 41 (Application file history of ’023 Patent). Multiple preliminary amendments were made to the application (*see id.*, pp. 87-97, 110-127) prior to issuance of the first Office Action on August 12, 2020. *Id.*, pp. 151-186. As part of the first Office Action, dependent claim 11 was rejected by the Patent Office based on a combination of Richardson and Xinfang. *Id.*

In response to this Office Action, applicant amended all independent claims to include both a “USB charge circuit” and a “USB connector . . . configured for providing charge input.” Ex. 2005, pp. 255-284. Among other arguments accompanying the amendment, applicant addressed the combination of Richardson and Xinfang by explaining that Xinfang fails to disclose USB input charging:

> Clearly, the charging port 34 of Xinfang is not a USB connector, but instead is a conventional cylindrical-shaped (e.g. barrel type) electrical connector. Further, the charging circuit is located in an external adapter located outside and separate from the mobile power bank, and is not part of the mobile power bank unlike the claimed subject matter.

Id., p. 275 (emphasis in original).

The Patent Office responded to the amendment incorporating the USB charging features by issuing a final Office Action based on the same combination of Richardson and Xinfang. *Id.*, pp. 286-317. Following the final rejection, applicant submitted an after-final amendment as part of the After-Final Consideration Pilot Program, revising the independent claims to require a "USB input charge circuit" and a "USB input connector." *Id.*, pp. 359-387.

In a subsequently issued Advisory Action, the Patent Office admitted that neither Richardson nor Xinfang teach the "USB input charge circuit" and "USB input connector." *See id.*, pp. 389-392. However, the Office stated that Tinaphong disclosed these limitations. *Id.* Applicant then filed a Request for Continued Examination. *Id.*, pp. 433-434.

On June 25, 2021, the Patent Office issued a second non-final Office Action for the application of the related '023 Patent, rejecting the independent claims over a combination of Richardson, Xinfang, and Tinaphong. *Id.*, pp. 435-466. Specifically, the Office relied on the teachings of Tinaphong to allegedly cure the

deficiencies of Richardson and Xinfang with respect to the input charge circuit. *See Id.*, pp. 441-442.

In response to this Office Action, applicant amended the claims to further distinguish Tinaphong by requiring that the USB input converter "increase" or "up-convert[]" the charge voltage received from a USB charger. *See id.*, pp. 477-507. Applicant explained that Tinaphong cannot practically be used as a jump starter device, and that the reference is nonanalogous art that a skilled artisan would not have used to modify Richardson:

> The apparatus of Tinaphong is an energy harvesting apparatus, and not disclosed as being a jump starter or for use as a jump starting apparatus. Further, the apparatus of Tinaphong cannot be practically used as a jump starting device due to the low voltage output (i.e. 5 volts) of the apparatus (see paragraph [0042]), which is too low to effectively provide power to a depleted or discharged 12V battery (e.g. the charging rate would be too slow to charge the 12V vehicle battery to jump start a vehicle). Thus, Tinaphong is clearly <u>non-analogous prior art</u>, and one skilled in the art would not turn to Tinaphong to attempt to modify and/or improve the jump starter of Richardson.

Id., p. 499 (emphasis in original). Applicant also explained that Tinaphong teaches away from the proposed combination with Richardson, because its input voltage is down converted (i.e., changed from 5 volts to 3.7 volts, which is even less suitable for charging a 12 volt battery):

> Tinaphong in fact <u>teaches away</u> from attempting to modify the jump starter of Richardson with the USB input connector and USB input charge circuit of Tinaphong. Specifically, Tinaphong teaches applying a second stage DC-to-DC converter circuit 22 acting as a <u>low</u> <u>drop out,</u>

> step down voltage converter/regulator to convert the 5 volt DC signal provided on the USB charger input connector 24 from an external source to a 3.7 volt DC signal on the output of the second DC-to-DC converter circuit used to charge the lithium polymer battery 18 (see paragraph [0040]).
>
> Dropping down the voltage as taught by Tinaphong is the exact opposite and wrong direction to the requirement of stepping up or increasing the charging voltage to charge the internal lithium polymer battery 18 of Tinaphong to at least 12 V so that the apparatus could be modified to become or be used as a jump starter as asserted in this rejection.

Id., p. 499-500 (emphasis in original).

Following an applicant-initiated interview, and based on the arguments presented against the combination of Richardson and Tinaphong, the Patent Office issued a Notice of Allowance for the ’023 Patent. *Id.*, pp. 517-522. In the “Reasons For Allowance” section, the Office stated that “[t]he prior art of record either taken alone or in combination thereof fails to teach or reasonably suggest, … the claimed combination.” *Id.*, p. 519. Additional information disclosure statements, a request for continued examination, and minor claim amendments were submitted and considered by the Patent Office following the initial notice of allowance.

The Office continued to diligently examine the claims of the ’023 Patent in light of the additional information disclosure statements that were provided after the first notice of allowance. For instance, in a subsequent notice of allowance that issued on March 10, 2022, the Office expressly discussed U.S. Pat. App. Pub. No.

2012/0187897 (Ex. 2006, "Lenk"). *See* Ex. 2005, p. 642. Lenk does not relate to jump starting, but describes boost converting a lower input voltage to a level that is suitable to charge an internal battery of an electronics device:

> A power converter 336 is provided within the battery charger IC 302 in order to receive the output of the switch 332 and transfer charge to the battery 306. In order to facilitate this conversion/charge operation, the power converter 336 would ensure that ***the input voltage, in the case of a low voltage harvesting device such as a solar cell, was converted to a higher voltage than the voltage of the storage element/battery in order to transfer charge to the storage element/battery*** 306 or, in the case of a power source with a voltage higher than the voltage of the storage element/battery 306, to regulate that power to a voltage adequate to charge the storage element/battery 306 . . .

Ex. 2006, ¶ [0023]. Although Lenk describes USB input charging, the Office correctly identified that Lenk's internal battery voltage is below 5V, which makes a USB input charging "voltage higher than the battery voltage, thus not requiring any voltage boost." Ex. 2005, p. 642. Accordingly, the Office found that the embodiment of Lenk taught away from modifying Richardson to arrive at the claimed invention.

No other prior-art rejections were made by the Office after the second non-final Office Action and prior to the '243 Patent issuing on September 20, 2022. *Id.*, p. 2233.

IV. CLAIM CONSTRUCTION

In this IPR, claim terms are to be construed in accordance with the standard set forth in *Phillips v. AWH Corp*., 415 F.3d 1303, 1312 (Fed. Cir. 2005) (en banc). But "[o]nly terms which are in controversy need to be construed, and then only to the extent necessary to resolve the controversy and material to the decision." *Facebook, Inc. v. Sound View Innovations, LLC*, IPR2017-01005, Paper No. 13 at 6 (PTAB Sept. 1, 2017) (citing *Vivid Techs., Inc. v. Am. Sci. & Eng'g, Inc*., 200 F.3d 795, 803 (Fed. Cir. 1999)).

As detailed below, reasons exist for denial of institution that do not require addressing the construction of claim terms at this time. If the Board nonetheless institutes trial, NOCO reserves its right to put forth constructions for any claim terms, including terms for which Petitioner formally or otherwise relies on a construction of a term.

It should also be noted that while Petitioner contends that "there are no formal claim constructions necessary in this proceeding" (Petition, p. 18), Petitioner fails to mention that during the related ITC investigation they proposed a specific construction for "USB input circuit" that excludes USB input circuits having bidirectional capabilities. *See* Ex. 2007, pp. 25-33. This proposed construction by Petitioner is *at least* contrary to the Petition's interpretation of Paparrizos as teaching

a USB input circuit (Petition, p. 61), and is therefore clearly germane to this proceeding.

V. PERSON OF ORDINARY SKILL IN THE ART

Petitioner states that a person having ordinary skill in the art ("POSITA") as of the claimed priority date would have been a person with "at least a bachelor's degree in electrical engineering or its equivalent and at least two years of experience in the field of electrical engineering including some experience with DC power supply or battery charger design" and that "[l]ess work experience could be compensated for by a higher level of education, such as a master's degree, and vice versa." Petition at 17-18. At this stage of the proceeding, NOCO does not propose a different level of skill in the art, but reserves the right to propose a level of ordinary skill in the art in this proceeding should it be instituted, or in other proceedings.

VI. THE BOARD SHOULD DENY INSTITUTION UNDER SECTION 325(d)

Institution should be denied on § 325(d) grounds. Under § 325(d), the Board has authority to decline institution of *inter partes* review when "the same or substantially the same prior art or arguments previously were presented to the Office." 35 U.S.C. § 325(d). The Board employs a two-part framework in analyzing § 325(d) issues: (1) whether the same or substantially the same prior art or arguments were presented to the Patent Office; and if so, (2) whether the petitioner has

demonstrated that the Patent Office erred in a manner material to the patentability of the challenged claims. *Advanced Bionics, LLC v. MED-EL Elektromedizinische Geräte GmbH*, IPR2019-01469, Paper 6 at 8 (PTAB Feb. 13, 2020) (precedential). This framework arises out of the non-exclusive factors set forth in *Becton, Dickinson*.[1] *See Becton, Dickinson & Co. v. B. Braun Melsungen AG*, IPR2017-01586, Paper 8 (PTAB Dec. 15, 2017) (precedential as to § III.C.5, first paragraph). Factors (a), (b), and (d) relate to whether the same or substantially the same art or arguments were previously presented to the Patent Office (part 1 of *Advanced Bionics*), and factors (c), (e), and (f) relate to whether the petitioner has demonstrated

[1] *Becton, Dickinson* identifies the following key factors: (a) the similarities and material differences between the asserted art and the prior art involved during examination; (b) the cumulative nature of the asserted art and the prior art evaluated during examination; (c) the extent to which the asserted art was evaluated during examination, including whether the prior art was the basis for rejection; (d) the extent of the overlap between the arguments made during examination and the manner in which petitioner relies on the prior art; (e) whether petitioner has pointed out sufficiently how the Examiner erred in its evaluation of the asserted prior art; and (f) the extent to which additional evidence and facts presented in the petition warrant reconsideration of the prior art or arguments. *See Becton, Dickson*, Paper 8 at 17-18 (§ III.C.5, first paragraph).

a material error by the Patent Office (part 2 of *Advanced Bionics*). *Advanced Bionics*, IPR2019-01469, Paper 6 at 10.

In this instance, Petitioner's unpatentability grounds seek a do-over of a robust and thorough examination that already addressed grounds similar to those raised in the Petition, and without showing any material error by the Office. Petitioner's first primary reference—Richardson—was fully considered and applied by the Patent Office during the prosecution of the '243 Patent, and the second primary reference—Yu—was also considered in an IDS and is substantially similar to Richardson. Moreover, Petitioner offers nothing new in citing the secondary references of Zhao and Paparrizos, which relate to generic USB input charging of devices and boost conversion of an input voltage, concepts which the Patent Office already considered. And the generic jump starter provided in the tertiary reference of Dao adds nothing new to the analysis either.

The crux of Petitioner's argument for avoiding § 325(d) is its claim that the "Examiner failed to consider *any* prior art teaching USB charging via a DC-DC *boosting* technique, which is the exact feature Patent Owner argued was missing from Tinaphong and Balmefrezol in response to the Examiner's obviousness rejections." Petition, p. 20 (emphasis in original). This argument fails for several reasons. First, Petitioner misleadingly isolates a single claim feature—boost conversion of an input voltage—as the reason for allowance over Tinaphong and

Balmefrezol. But the Office did not allow the ’243 Patent based on a single missing feature; instead, it focused on why a POSITA would not have modified the jump starter of Richardson to include a USB input charge circuit. And the newly cited references of Zhao and Paparrizos do not substantially alter this patentability determination by the Office.

Second, contrary to Petitioner’s § 325(d) argument, the Office already considered *numerous* references that disclose boost conversion of an input voltage in the prosecution history of the related ’023 Patent. Given Petitioner’s knowledge of the examiner’s consideration of such prior art as a result of Petitioner’s related challenge in IPR2024-00577, the statement that the “Examiner failed to consider *any* prior art teaching USB charging via a DC-DC *boosting* technique” is misleading at best. Petition, p. 20 (emphasis in original). At least one reference expressly considered by the Office in the prosecution history of the related ’023 Patent, and several references considered in the prosecution history of the presently-challenged ’243 Patent disclose incorporating a boost converter into an input charging circuit. Thus, rather than presenting new prior art that bridges the gap between jump starters and USB charging, Petitioner relies on references that disclose effectively the same thing as those already considered by the Office.

A. Step 1: *Advanced Bionics* Favors Denying Institution Under § 325(d) Because The Same Or Substantially The Same Art Or Arguments Were Previously Presented To The Office

1. The Office already expressly considered Richardson, and Yu is substantially the same as Richardson

In its first and second grounds, Petitioner relies on the same primary reference (Richardson) that the Office expressly used to reject the claims during prosecution of both the '243 Patent and the related '023 Patent. *Compare* Petition, pp. 24-53 *with* Ex. 1002, pp. 443-468 *and* Ex. 2005, pp. 155-166. Moreover, Petitioner uses Richardson in the same manner that the Office did, relying on it to teach various elements of the jump starter system, such as the claimed power supply, positive and negative polarity battery terminal connectors, and the power switch. *See id.* Just like during prosecution, the Petition is forced to rely on a secondary reference (Zhao) when challenging the last two limitations of claim 1, which relate to the USB input charging circuit and connector. *See* Petition, pp. 34-42. Moreover, the Petition does not even attempt to distinguish how Richardson was used during prosecution from how it is being used in the Petition. *See* Petition, pp. 20-22. That's because it is being used in the same way.

The third and fourth grounds in the Petition effectively mirror the first and second, with Yu taking the place of Richardson, and Paparrizos taking the place of Zhao. Yu was also already considered by the Office during prosecution, and was

specifically cited in an Information Disclosure Statement signed by the Examiner before allowance. *See* Ex. 1002, p. 1893. Just like Richardson, Yu describes a jump starter device but fails to teach or suggest USB input charging of said device. *See* Ex. 1005; Ex. 1008. And similar to how Richardson was expressly relied on by the Office to reject claim 1 during prosecution and in Grounds 1 and 2 of the Petition, Grounds 3 and 4 similarly rely on Yu for all but the last two claim limitations.

The Petition makes no attempt to substantively distinguish Yu from Richardson, instead choosing to rely solely on the fact that the examiner expressly relied on Richardson instead of Yu during prosecution. *See* Petition, p. 26. It is well-established, however, that previously presented references include art cited in an IDS but not applied by the Examiner. *See, e.g.*, *Biocon Pharma Ltd. v. Novartis Pharms. Corp.*, IPR2020-01263, Paper 12 at 9 (P.T.A.B. Feb. 16, 2021) ("In light of the Board's precedential *Advanced Bionics* decision, we reject Petitioner's contention that, even though EP '072 appears on an IDS, we should decline to exercise discretion under § 325(d) because EP '072 was 'not applied by the Examiner.'"). In light of their similar disclosures and given that the Office chose to base its initial rejection on Richardson, it is unsurprising that the Office never expressly applied Yu during prosecution.

Accordingly, the two primary prior-art references are the same as the art that was considered by the Office, and thus the analysis under § 325(d) centers instead

on the cumulative nature of the secondary references relied on in each ground of the Petition.

2. Petitioner's arguments using Zhao and Paparrizos substantively mirror those involving Tinaphong and Lenk during the prosecution of the related '023 Patent

The Petition argues that the Office only allowed the '243 claims because a specific claim element—a boost converter—could not be found in the prior art. But as explained above in Section III.C, during prosecution of the related '023 Patent the Office already considered Richardson in view of references that describe generic USB charging arrangements having no relation to jump starters. Rather than a missing claim element, the Office ultimately allowed the claims after considering applicant's arguments that such references were non-analogous and that a skilled artisan would not have modified Richardson in view of them.

The inventors of the '243 Patent did not invent the concept of boost converting an input voltage being provided to an electronics device's battery, nor were they the first ones to apply this concept to a USB input charger. In fact, the Lenk reference, which the Office expressly considered in the prosecution of the related '023 Patent (Ex. 2005, pp. 2075-2076) plainly discloses boost converting a charging voltage provided to a battery, as further discussed below. Instead, the Office understood that the claimed invention focuses on the inclusion of a USB input charger in a large-

capacity battery device like a jump starter, which was counter-intuitive and non-obvious at the time the application that became the ’243 Patent was filed.

There is a high degree of overlap between the prior-art arguments made during examination of the ’023 Patent and the manner in which Petitioner relies upon the prior art in the Petition. And it is well established that related applications may be considered when evaluating whether the substantially the same art or argument was previously presented to the Office. *See, e.g.*, *Becton, Dickson*, Paper 8 at 16. As discussed above in Section VII.A.1, the Petitioner relies upon effectively the same primary references (Richardson and Yu) that were cited by the Patent Office for the same claim limitations during prosecution. And, just as Petitioner now relies on Zhao and Paparrizos, the Examiner proposed a similar modification to Richardson in light of Tinaphong during the prosecution of the ’023 Patent; namely, incorporating a “USB input charge circuit (input of first stage DC-DC-converter circuit 20) configured for converting (via element 20 which is a first DC-DC converter) power from a USB charger (24) to charge voltage and current for charging the power supply.” Ex. 2005, p. 441.

Although Tinaphong discloses a buck converter instead of a boost converter, the Office expressly considered Lenk after the claims were amended to require a boost conversion (*see* Ex. 2005, pp. 2075-2076), and Lenk recognizes that USB input voltages need to be boosted when they are not higher than the battery voltage:

> An external USB/external power input connection node 502 is added to enable ***a USB*** or other type of external power connector to be connected with the battery charger 512, this ***being at voltage higher than the battery voltage, thus not requiring any voltage boost***.

Ex. 2006, ¶ [0035]. Lenk further discloses boost converting a low input voltage provided by a different input source to a level that is suitable to charge an internal battery:

> In order to facilitate this conversion/charge operation, the power converter 336 would ensure that ***the input voltage***, in the case of a low voltage harvesting device such as a solar cell, ***was converted to a higher voltage than the voltage of the storage element/battery*** in order to transfer charge to the storage element/battery 306 . . .

Ex. 2006, ¶ [0023]. Accordingly, just like the Zhao and Paparrizos references relied on by Petitioner, Lenk contemplates that its battery charging system can "use low voltages charging systems" to "charge batteries with a voltage rating above that of the voltage received from the USB power source." Petition, p. 25. Neither the Petition nor the related petition in IPR2024-00577 challenging the '023 Patent discuss these teachings from Lenk or the similarities between Lenk's boost conversion teachings and the Petition's reliance on Zhao and Paparrizos.

Unsurprisingly given their similar teachings, the secondary references of Zhao and Paparrizos suffer from the same core deficiency as Lenk – they do not relate to charging a vehicle jump starter. As a result, these new references provide no new explanation for why a POSITA would have modified the jump starters of Richardson

or Yu to include a USB input charge circuit. *See, e.g.*, *Regeneron Pharms., Inc. v. Kymad Ltd.*, IPR2020-00389, Paper 7 at 11-12 (PTAB May 26, 2020) ("Thus, while Morrison is relevant, [p]etitioner has not shown that it is any more relevant than Tanamachi to showing the obviousness of the . . . limitation in claim 1.").

The final reference, Dao, is asserted primarily against select dependent claims and only as a tertiary reference with Richardson and Zhao or with Yu and Paparrizos, and adds nothing to the § 325(d) analysis. Dao was already submitted in an IDS and considered by the examiner during prosecution of the '243 Patent. Ex. 1001, p. 3. Similar to Yu, the Petition does not even attempt to argue how Dao differs from the art that was already considered by the Office. *See* Petition, pp. 20-24. And Dao does not disclose boost conversion of an input charging voltage or contain any teaching related to Petitioner's § 325(d) arguments. Instead, Petitioner merely relies on Dao to teach other dependent claim features, such as "(1) a USB output connector, . . . (2) using lithium chemistry cells . . . (3) implementing overcharge and overdischarge protections." Petition, p. 45.

Therefore, the new secondary references used in the grounds of the Petition fail to substantially alter the patentability analysis that was already undertaken by the Office during prosecution.

3. In addition to expressly considering Lenk in the prosecution of the related ’023 Patent, the Office considered numerous other disclosures that describe input charging via a DC-DC boost converter

Petitioner argues that the Office was unable to uncover a reference that describes input charging via a DC-DC boost converter and that, if the Examiner had only been able to uncover a reference such as Zhao or Paparrizos, then the ’243 Patent would have never been allowed. *See* Petition, p. 20. But the Office already considered numerous references that disclose boost converting input charging voltages during the prosecution of the ’243 Patent.

For example, the Office considered U.S. Pat. No. 7,017,055 (Ex. 2008, “Ho”) which was included in a list of references cited by the Examiner on December 23, 2022. Ex. 1002, p. 2163. Ho relates to “a universal serial bus (USB) hub that can actively supply power for connected peripheral equipment” that “includes a battery charger, a storage battery, a DC/DC converter, and a control circuit.” Ex. 2008, 1:52-55, 1:63-64. Ho’s preferred embodiment discloses boost conversion of a USB input used to charge an internal storage battery of the hub:

> When the preferred embodiment of the present invention is connected to the USB BusPower, ***the electric power of the USB is inputted*** via a diode D1, and then the self-powered terminal 5V charges the storage battery 20 via a battery charger 10 . . . . The battery charger 10 is made up of a simple boost circuit of an integrated circuit, serial number IC34063. ***The simple boost circuit is used to boost input voltage until the voltage for charging the battery is sufficient***, and then the battery is charged.

Ex. 2008, 3:40-54.

Similarly, the Office considered U.S. Pat. No. 8,786,247 (Ex. 2009, "Ishino") which was submitted in an information disclosure statement by applicant and signed on January 4, 2023. Ex. 1002, p. 2290. Again, it is well-established that art submitted in an IDS is considered previously presented art in the *Becton, Dickson* analysis. *See Advanced Bionics*, IPR2019-01469, Paper 6 at 8 ("Previously presented art includes art made of record by the Examiner, and art provided to the Office by an applicant, such as on an Information Disclosure Statement (IDS), in the prosecution history of the challenged patent."); *Chemtronics USA, Inc. v. FlatFrog Lab'ys*, IPR2024-00015, Paper 11 at 15 (Apr. 22, 2024). Like Lenk, Ishino relates to a charging circuit for a battery that receives inputs from both a solar battery and a USB external power supply. *See* Ex. 2009, 1:5-8; 6:41-46. Ishino discloses boost converting an input charge applied to lithium ion batteries:

> Accordingly, in order to charge a lithium-ion battery (3 to 4.2 V), which is widely employed as a secondary battery, there is a need to ***boost the voltage*** received from the solar battery ***using a DC/DC converter before the voltage is supplied to the secondary battery***.

Ex. 2009, 1:36-40. While Ishino does not expressly describe applying its boost conversion technique to its USB input charging circuit, it does disclose including a DC/DC converter into the USB charger circuit:

> The electronic device 2 includes an adapter terminal 3 via which an external power supply (not shown) such as an AC adapter, ***a USB***

> ***(Universal Serial Bus)***, or the like, can be detachably connected, which allows a voltage (which will be referred to as the "external voltage" hereafter) V_{EXT} to be received from an external power supply. The external charger IC 7 charges the secondary battery 6 using the external voltage V_{EXT}. The external charger IC 7 may be configured as a linear-regulator charger circuit, or may be configured as a switching regulator ***(DC/DC converter) charger circuit***.

Id., 6:41-50.

Further, numerous additional references considered by the Office provide general disclosures of boost conversion, further confirming that the Examiner was well aware of this feature in the art. *See, e.g.*, WIPO Pub. No. 2015/195321 (Ex. 2010), ¶ [0072] ("FIG. 5A shows a separate and dedicated nonisolated ***DC converter 503a that boosts the voltage up to the UCs 501a during a recharge cycle***."); U.S. Pat. App. Pub. No. 2008/0157732 (Ex. 2011), ¶ [0004] ("Conversely, step-up converters, commonly referred to as ***'boost converters,' are needed whenever a battery's voltage is lower than the voltage needed to power its load***."); G.B. Pat. App. No. 2,265,267 (Ex. 2012), p. 4 ("If the voltage of the power source is lower than that of the battery the controller must also ***step-up the voltage of the apparatus to a level suitable for trickle charging the battery***.").

Given the Office's consideration of references such as Lenk, Ho, and Ishino, all of which explicitly describe USB charging and the use of boost converters to step up an input charge voltage, the Petition does nothing more than present substantially the same art and arguments that were already evaluated during the prosecution of

the ’243 Patent and the related ’023 Patent. Accordingly, *Becton, Dickinson* factors (a) and (b) both support denial under § 325(d), since Petitioner’s newfound references of Zhao and Paparrizos are substantially similar to, and cumulative of, the numerous references already considered by the examiner that disclosed boost converting an input charge voltage.

While Petitioner claims that “the prior art and arguments raised in Ground 1 are ‘substantially different’ than those raised during prosecution,” the Petition fails to provide any discussion of Lenk or any of the other references considered by the Examiner that describe boost converters in its analysis of the first part of the *Advanced Bionics* framework. *See* Petition, pp. 20-22. Instead, Petitioner attempts to build a narrative of a missing limitation in the art. But again, Lenk and the other prosecution history art plainly disclose the use of boost converters and were considered by the examiner. Therefore, the first part of the *Advanced Bionic*s framework is met based on factors (a) and (b) alone. *See Chemtronics*, IPR2024-00015, Paper 11 at 17.

Becton, Dickinson factor (d) (the extent of the overlap between arguments made during examination and the manner in which Petitioner relies on the prior art) also supports denial under § 325(d). Petitioner uses Zhao and Paparrizos to allegedly cure the same deficiencies in Richardson (*i.e.*, a USB input circuit and boost conversion of a low-voltage input charge) that the Examiner already considered

relying on Tinaphong, and later Lenk, during the prosecution of the ’023 Patent. *Compare* Petition, pp. 40-42, 60-62 *with* Ex. 2005, pp. 441-442. But Zhao and Paparrizos are also unrelated to charging a jump starter or comparable device, and therefore suffer from the same motivation-to-combine deficiency that prompted the Office to allow the related ’023 Patent over Lenk in the first place.

Thus, because the prior art and arguments raised in the grounds of the Petition are “substantially similar” to what the Office has already considered, the first part of the *Advanced Bionics* framework is satisfied.

B. Step 2: Given That Substantially The Same Art Was Presented To The Office, *Advanced Bionics* Favors Denying Institution Under § 325(d) Since Petitioner Has Failed To Meet Its Burden To Demonstrate Material Error By The Office

As demonstrated by *Becton, Dickinson* factors (c), (e), and (f) (part 2 of *Advanced Bionics*), Petitioner has also failed to meet its burden of demonstrating any error by the Office that is material to patentability. *See Advanced Bionics*, IPR2019-01469, Paper 6 at 8 (“If the same or substantially the same prior art or arguments previously were presented to the Office, then the Board’s decisions generally have required a showing that the Office erred in evaluating the art or arguments.”). In fact, the Petition fails to properly address any Office error with respect to Lenk, which the Examiner had already considered in the related ’023 Patent, or with respect to the additional references of record that were considered in

the ’243 Patent. The Office committed no error in either case, and its ultimate conclusion that a skilled artisan would not have been motivated to modify Richardson based on the art of record was well-founded.

With respect to Lenk, the Petition chooses not to address this prior art, even though it plainly discloses boost conversion of an input charge and was expressly considered by the Office in the prosecution history of the related ’023 Patent that is also being concurrently challenged by petitioner, and from which the ’243 Patent is terminally disclaimed. Instead, the Petition provides only a superficial statement that the “Examiner did not sufficiently locate, evaluate, or appreciate prior art teaching boosting a USB input voltage to charge a higher voltage battery via a DC-DC converter.” Petition, p. 22.

Given that Lenk and other references considered by the Examiner are substantially similar to Zhao and Paparrizos, as discussed above in Section VII.A, the Petition’s statements addressing only Tinaphong and Balmefrezol at a high level are insufficient to meet Petitioner’s burden under part two of the *Advanced Bionics* framework and *Becton, Dickinson* factors (c), (e), and (f). Where, as here, “the first part of the framework is satisfied and the petitioner fails to make a showing of material error, the Director generally will exercise discretion not to institute *inter partes* review.” *Advanced Bionics*, IPR2019-01469, Paper No. 6 at 8-9.

Furthermore, while the Office's written explanation for the allowance of the claims of the '023 Patent over Lenk is admittedly short, it contains no error and demonstrates that the Examiner fully considered Lenk. *See* Ex. 2005, p. 642. And given that this explanation was included in a Notice of Allowance rather than an Office Action, the short length is to be expected. Nonetheless, the Examiner's reasoning for why the claims of the related '023 Patent are allowable over Lenk is clear—rather than identifying a missing element from Lenk—the Office focuses on a motivation-to-combine deficiency.

Lenk's preferred embodiment includes a single battery cell that operates below 5 volts, and therefore the Office found that Lenk would lead one away from modifying a reference like Richardson to arrive at the claimed invention, which requires "charg[ing] a power supply of a jump start apparatus from a low 5V potential standard USB chargers to an up-converted voltage of 12.4 Volts." Ex. 2005, p. 642. This statement makes sense, and matches the applicant's reasoning in the prosecution histories of both patents for overcoming Tinaphong: that the inclusion of a USB input charger on a high-voltage battery device like a jump starter was counter-intuitive at the time and a POSITA would not have made the proposed combination.

Regarding the additional references included in the record that disclose USB input charging and boost conversion, such as Ho and Ishino, the Petition wholly fails

to address any of these references. Separate from any alleged error with respect to Lenk, this misstep by the Petitioner represents an additional reason to deny the Petition under § 325(d).

At bottom, Petitioner does not satisfy the second part of the *Advanced Bionics* inquiry. Petitioner fails to show a material error in the Examiner's consideration of prior art that is the same or substantially the same as the art included in the grounds of the Petition. Accordingly, Patent Owner respectfully submits the Board should exercise discretionary denial under § 325(d).

VII. PETITIONER HAS FAILED TO MEET ITS BURDEN TO DEMONSTRATE THAT THERE IS A REASONABLE LIKELIHOOD THAT IT WILL PREVAIL ON THE ASSERTED GROUNDS

The Petition relies on obvious combinations that seek to modify the prior-art systems disclosed in Richardson and Yu to arrive at the claimed invention. But the Petition only addresses why a POSITA would have modified a hypothetical jump starter to include USB charging, rather than why a POSITA would have modified the specific systems of Richardson and Yu to include USB charging. When the actual teachings of each reference are considered, it is apparent that a POSITA would not have modified the particular systems of Richardson and Yu to arrive at the claimed invention.

A. The Petition Fails To Adequately Explain Why A POSITA Would Have Modified The System Of Richardson In Grounds 1 And 2

"In an IPR, the petitioner has the burden from the onset to show with particularity why the patent it challenges is unpatentable." *Harmonic Inc. v. Avid Tech.*, Inc., 815 F.3d 1356, 1363 (Fed. Cir. 2016); *see also Henny Penny Corp. v. Frymaster LLC*, 938 F.3d 1324, 1330 (Fed. Cir. 2019). As part of this burden, when an obviousness ground in a petition asserts a combination of identified prior art, it "must demonstrate that a skilled artisan would have been motivated to combine the teachings of the prior art references to achieve the claimed invention, and that the skilled artisan would have had a reasonable expectation of success in doing so." *Netflix, Inc. v. DivX, LLC*, No. 2022-1083, 2243 U.S. App. LEXIS 4926, at *9 (Fed. Cir. Mar. 1, 2023).

The Petition fails to consider the actual system of Richardson that it sought to modify in light of Zhao's teachings. For instance, the Petition states that:

> A PHOSITA would understand Zhao's system is suitable for use with a variety of pack configurations and battery chemistries, such as a 3S pack of lithium-ion cells rated at 11.1V or a 4S pack of lithium-ion cells rated at 14.8V (***both of which would be well-suited for starting a traditional lead-acid vehicle starter battery rated at 12V***). EX1006, 3:6-11; EX1003, ¶ 90. Thus, the disclosure of Zhao provides an explicit teaching, suggestion, or motivation to implement Zhao's USB input feature ***with a system like Richardson's jump starter***.

Petition, pp. 35-36. But the system of Richardson is not a traditional portable jump starter, but rather a heavy-duty jump starter with very powerful internal batteries that,

despite their large charge capacity demands, can be recharged in a short period of time and then used to jump a fleet of vehicles, such as a commercial truck fleet. *See* Ex. 1005, ¶¶ [0007], [0055]. As evidence, Richardson states that "[n]ormal vehicle charging voltages fall within certain ranges for 12, 18, 24, 30, 36, 42 and 48 volts systems." *Id.*, ¶ [0054]. And Richardson further explains how its jump starter has to be powerful enough to accommodate the demands of batteries up to 48 volts by appropriately configuring the batteries in the jump starter and selecting voltage outputs. *Id.*, ¶¶ [0034]-[0035], [0054].

By permitting rapid recharging of its large-capacity batteries from a vehicle charging system (*i.e.*, a vehicle alternator), Richardson states that its system would be "useful when starting fleets of vehicles with dead batteries," since the device may be "rapidly recharged to start many vehicles in a row." Ex. 1005, ¶ [0055]. Richardson emphasizes the importance of rapidly recharging the device in such a situation, stating that this functionality "allows the capacitors 21 and jump starter batteries 22 to be fully recharged in about 1 to 5 minutes and can therefore start many vehicles in a row without becoming discharged." *Id.* Moreover, Richardson notes that "[t]he jump starter batteries 22 only need to reach a 50% charge in order for the system to attempt to start the vehicle," thereby further emphasizing the importance that Richardson places on fast recharging of its system. *Id.*, ¶ [0029]. Given the focus of Richardson on rapid recharging, the Petition fails to demonstrate that a

POSITA would have modified Richardson's jump starter to include a USB charger which, again, has known charging limitations.

In addition to overlooking the nature of Richardson, the Petition also mistakenly interprets Richardson's disclosed system as having existing charging input circuitry:

> A PHOSITA would have been motivated to modify the design of Richardson's jump starter to either (1) ***replace the existing charging circuitry*** with Zhao's step-up charging system and connect the output to Richardson's jump starter batteries . . . . although option 1 may result in longer charging times, it allows the supplier to avoid the need to supply a proprietary charger or other type of AC "power brick" that would be less ubiquitous or less standardized than a USB charger.

Petition, p. 36. But Richardson's only disclosed method for recharging the internal batteries involves using its red and black shunt cable ports. Richardson used the attached vehicle's electrical system to recharge the jump starter. Moreover, there is no "existing charging circuitry" at all in Richardson. Richardson's schematics do not show any other way to charge the batteries 22 other than the highlighted path from the vehicle 28 through the jumper cables 60:

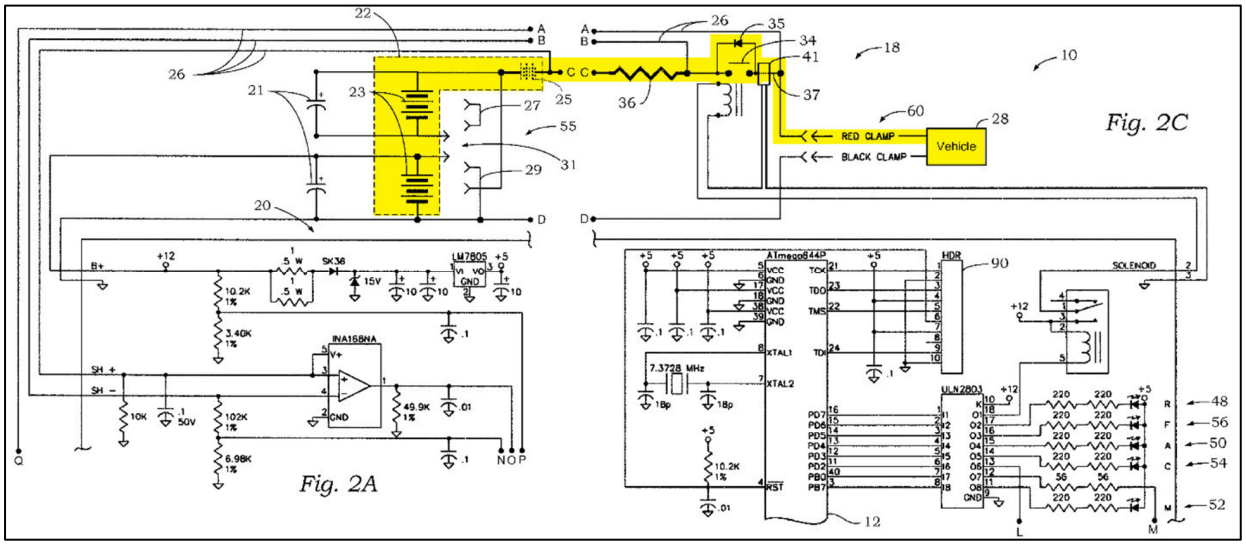

Ex. 1005, Figures 2A, 2C (color annotations added). There is no charging port or connection of any kind described or depicted in Richardson's device, nor does the Petition point to any. Therefore, Petitioner's proposed modification of "replacing the existing charging circuitry" of Richardson simply does not make any sense. In light of Richardson's actual disclosure, it was Petitioner's burden to explain why a POSITA would have taken a charging device that needed no charging port and modified it to include one. Petitioner made no attempt to satisfy this burden, and Ground 1 is fatally deficient as a result. And the addition of Dao in Ground 2 fails to cure the deficiencies associated with the underlying combination of Richardson and Zhao.

Thus, the combinations of Richardson with Zhao alone, or Richardson with Zhao and Dao, are detached from the actual prior-art system being relied on and, just like during prosecution of the '243 Patent, the motivation to make the asserted

combination is insufficient. Petitioner has ignored Richardson's teachings and therefore has failed to meet its burden to explain why a POSITA would have modified Richardson given the speed and convenience of recharging already offered by its system.

B. The Petition Fails To Adequately Explain How A POSITA Would Have Modified The System Of Yu In Grounds 3 And 4

Petitioner's alleged motivations to combine Yu with Paparrizos, either alone or in further view of Dao, also fall well short of its burden. In support of Ground 3, Petitioner argues that "Paparrizos ***teaches the desirability of charging higher voltage batteries with a 5V input***, which is a known technique a PHOSITA would have been motivated to implement predictably to charge Yu's battery." Petition, p. 54. This statement is wrong. It is undesirable to try to charge a higher voltage battery with a 5V input; indeed, this is the exact problem that Paparrizos seeks to resolve with its "battery charging circuit." *See* Ex. 1009, 1:5-39. Moreover, Paparrizos' techniques relate to charging of "[c]omputer tablets and other mobile devices, such as mobile phones, digital SLR cameras, video recorders, audio devices" with battery packs that "typically range from 3.0V to 8.4V," not to charging jump starters or comparable devices. *Id.*, 1:9-15. In fact, Paparrizos describes relying on a "current limiter 218 in order to limit the current flow through the buck boost circuit" from the USB input, which further confirms that its charging circuit is not intended

for charging large-capacity battery systems. *Id.*, 4:48-58.

But regardless of the deficiencies in the motivation to combine Yu and Paparrizos, Petitioner also fails to demonstrate *how* the battery charging circuit of Paparrizos would allegedly be incorporated into the system of Yu. Yu does not specify its internal battery type, and provides a very limited disclosure of its charging input. *See*, Ex. 1008, Fig. 8, ¶ [0028]. Nowhere does the Petition attempt to show how Yu's system, depicted in the circuit diagrams of Figures 1-5, would have been modified to include Paparrizos' complex charging circuit. In fact, Paparrizos' charging circuit includes numerous operating modes—many of which would be useless to the system of Yu (*e.g.*, reverse boost mode, forward buck mode)—and relies on a "configuration detector 216 [to] generate suitable signals 222 that are used to configure the buck boost circuit 212 to operate accordingly." Ex. 1009, 4:42-47. The Petition provides no explanation for how the POSITA allegedly could have or would have integrated Paparrizos' configuration detector into Yu's circuit to ensure that the correct operating mode (*i.e.*, forward boost mode) is applied. Petitioner's conclusive attempt to combine these two prior-art systems therefore falls short of its burden to show unpatentability with particularity.

The addition of Dao in Ground 4 fails to cure the deficiencies associated with the underlying combination of Yu and Paparrizos. Again, Dao does not teach or suggest the use of a USB input charger, and instead describes a "charging unit 106"

that "may accept an A/C voltage input 104, such as an 110V or 220V input provided through a connection to a wall socket." Ex. 1031, ¶ [0022]; *see id.*, ¶ [0016]. Thus, Dao cannot take the place of Paparrizos in the asserted grounds. Moreover, similar to the combination with Paparrizos, Petitioner provides only general statements in support of the combination of Yu and Dao, and provides no explanation for how a POSITA would have integrated Dao's features into the circuit of Yu. *See* Petition, pp. 66-74. Again, such conclusive attempts fall short of Petitioner's burden.

* * *

For this threshold reason, Petitioner's prior-art grounds fail to meet its burden for institution, since they fail to address the actual prior-art systems that Petitioner seeks to modify. And as shown in Part VI, all of Petitioner's Grounds warrant denial of institution under § 325(d).

VIII. CONCLUSION

For the reasons set forth above, the Board should decline to institute *inter partes* review of the ’243 Patent.

Respectfully submitted,

Dated: June 13, 2024

/Joseph M. Sauer/

Joseph M. Sauer, Reg. No. 47,919
JONES DAY
901 Lakeside Avenue
Cleveland, Ohio 44114
(216) 586-7506
jmsauer@jonesday.com

David B. Cochran, Reg. No. 39,142
JONES DAY
901 Lakeside Avenue
Cleveland, Ohio 44114
(216) 586-7029
dcochran@jonesday.com

Matthew W. Johnson, Reg. No. 59,108
JONES DAY
500 Grant Street, Suite 4500
Pittsburgh, PA 15219
(412) 394-9524
mwjohnson@jonesday.com

John M. Graves, Reg. No. 77,147
JONES DAY
90 South Seventh Street, Suite 4950
Minneapolis, MN 55402
(612) 217-8800
jgraves@jonesday.com

Attorneys for The NOCO Company

CERTIFICATE OF WORD COUNT

Pursuant to Rule 37 C.F.R. 42.24(d), the undersigned hereby certifies that, based upon the word count of the word-processing system used to prepare this preliminary response, the number of words in this Preliminary Response is 11,405.

Respectfully submitted,

Dated: June 13, 2024

/Joseph M. Sauer/
Joseph M. Sauer
Reg. No. 47,919
JONES DAY
North Point, 901 Lakeside Avenue
Cleveland, Ohio 44114
(216) 586-7506

CERTIFICATE OF SERVICE

Pursuant to 37 C.F.R. § 42.6(e), the undersigned certifies that on June 13, 2024, a complete and entire copy of **PATENT OWNER'S PRELIMINARY RESPONSE** has been served in its entirety by e-mail on the following counsel of record for Petitioner:

Lead Counsel:	**Back-up Counsel**
Daisy Manning Reg. No. 66,369 HUSCH BLACKWELL LLP 8001 Forsyth Boulevard, Suite 1500 St. Louis, MO 63105 (314) 480-1500 Telephone (314) 480-1505 Facsimile PTAB-DManning@huschblackwell.com	Paul L. Smelcer Reg. No. 74,975 HUSCH BLACKWELL LLP 8001 Forsyth Boulevard, Suite 1500 St. Louis, MO 63105 (314) 480-1500 Telephone (314) 480-1505 Facsimile paul.smelcer@huschblackwell.com

Dated: June 13, 2024

/Joseph M. Sauer/
Counsel for Patent Owner