US 20040130298A1

(19) United States

(12) Patent Application Publication

(10) Pub. No.: US 2004/0130298 A1

(43) Pub. Date: Jul. 8, 2004

Krieger et al.

(54) MICROPROCESSOR CONTROLLED BOOSTER APPARATUS WITH POLARITY PROTECTION

(76) Inventors: **Michael Krieger**, Miami Beach, FL (US); **Bruce Randolph**, Ft. Lauderdale, FL (US)

Correspondence Address:
VENABLE, BAETJER, HOWARD AND CIVILETTI, LLP
P.O. BOX 34385
WASHINGTON, DC 20043-9998 (US)

(21) Appl. No.: **10/315,061**

(22) Filed: **Dec. 10, 2002**

Related U.S. Application Data

(60) Provisional application No. 60/357,146, filed on Feb. 19, 2002. Provisional application No. 60/369,839, filed on Apr. 5, 2002.

Publication Classification

(51) **Int. Cl.**[7] **H02J 7/04**

(52) **U.S. Cl.** **320/165**

(57) **ABSTRACT**

A polarity protection circuit for a battery booster device is provided. According to an exemplary embodiment, the polarity protection circuit is comprised of solid-state devices. Preferably no mechanical or electro-mechanical devices, such as solenoids are included in the polarity protection circuit. The polarity protection circuit is electrically connected to the battery to be charged and to the boosting battery. The polarity protection circuit prevents current flow between the batteries unless proper polarity is achieved.

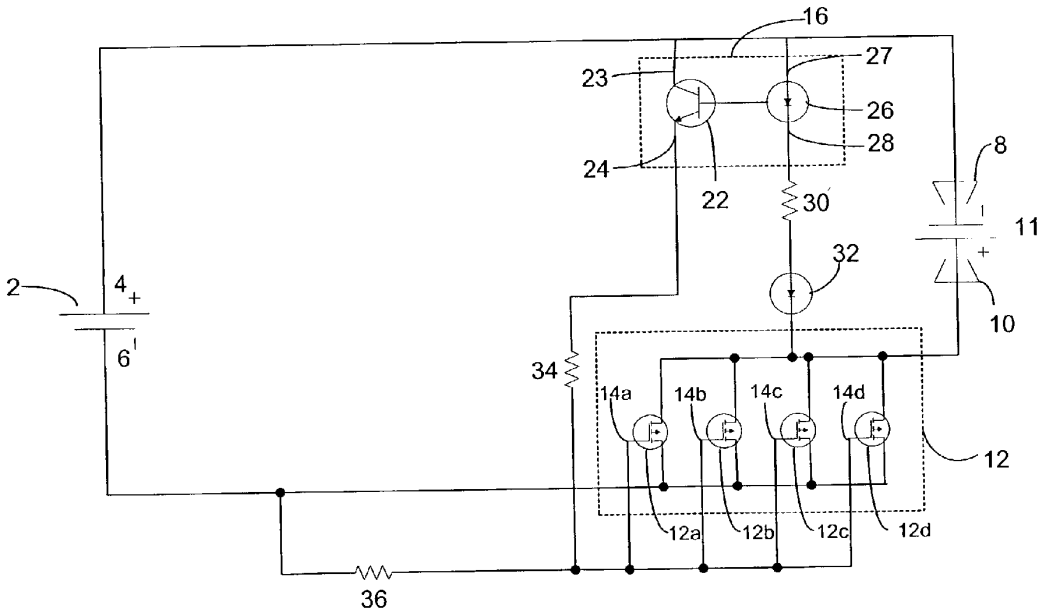

DELTRAN EX1010
IPR2024-01219

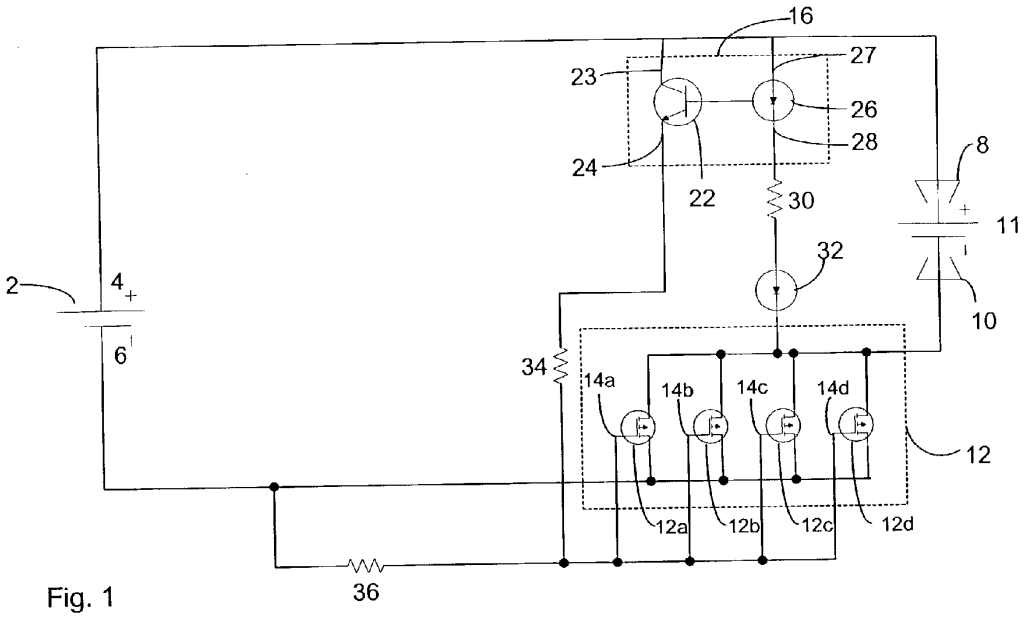

Fig. 1

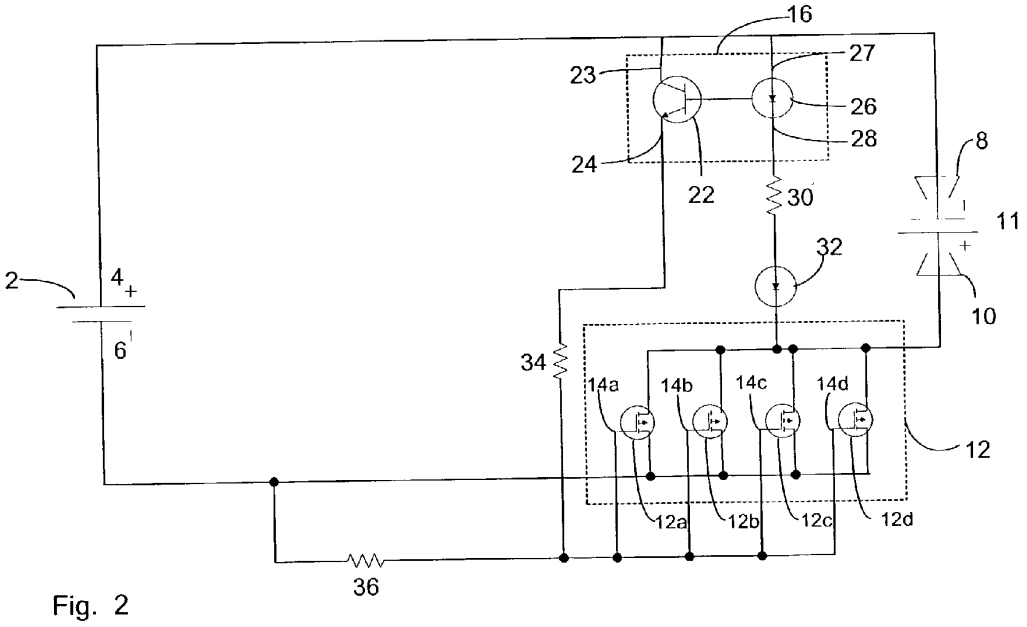

Fig. 2

DELTRAN EX1010
IPR2024-01219

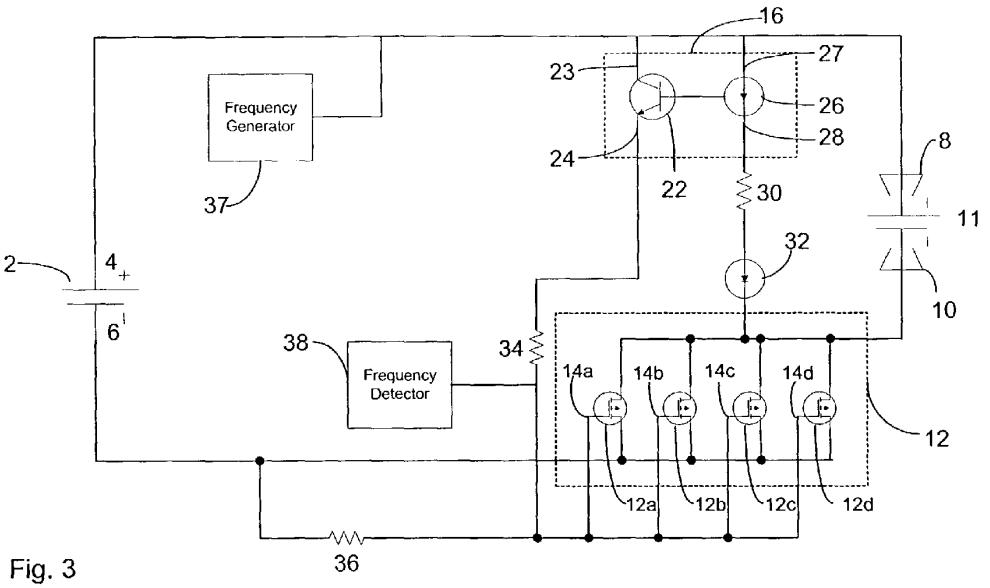

Fig. 3

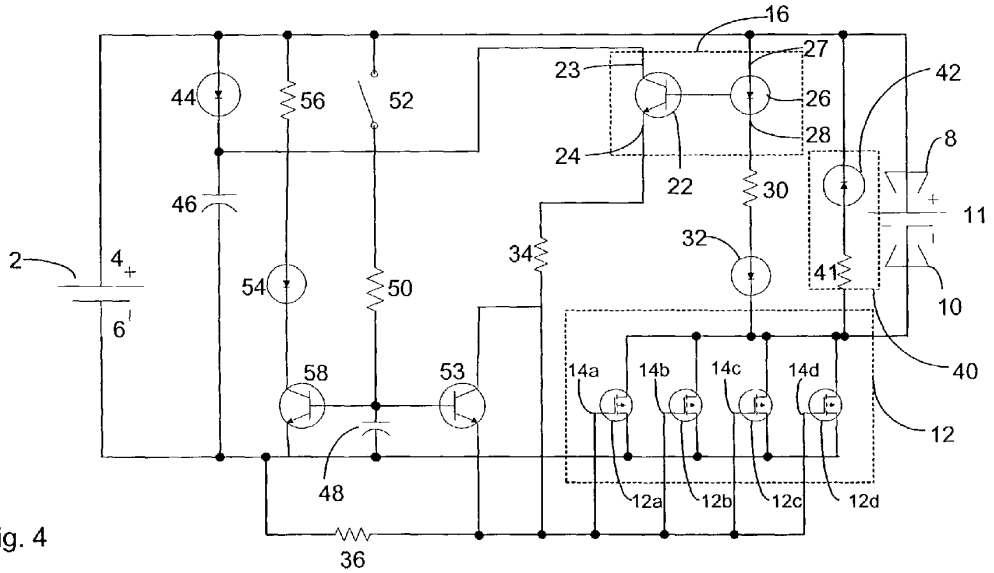

Fig. 4

DELTRAN EX1010
IPR2024-01219

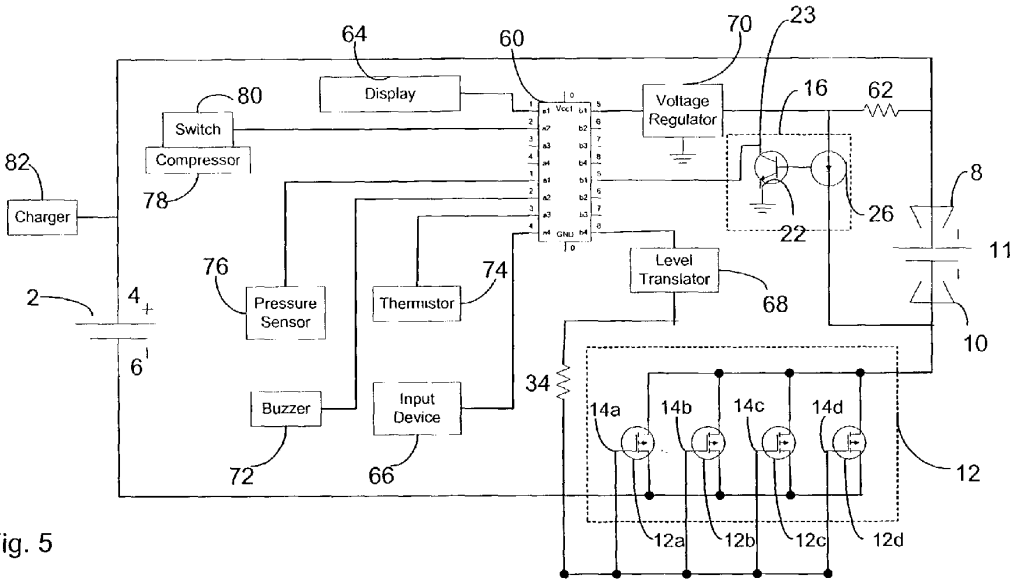

Fig. 5

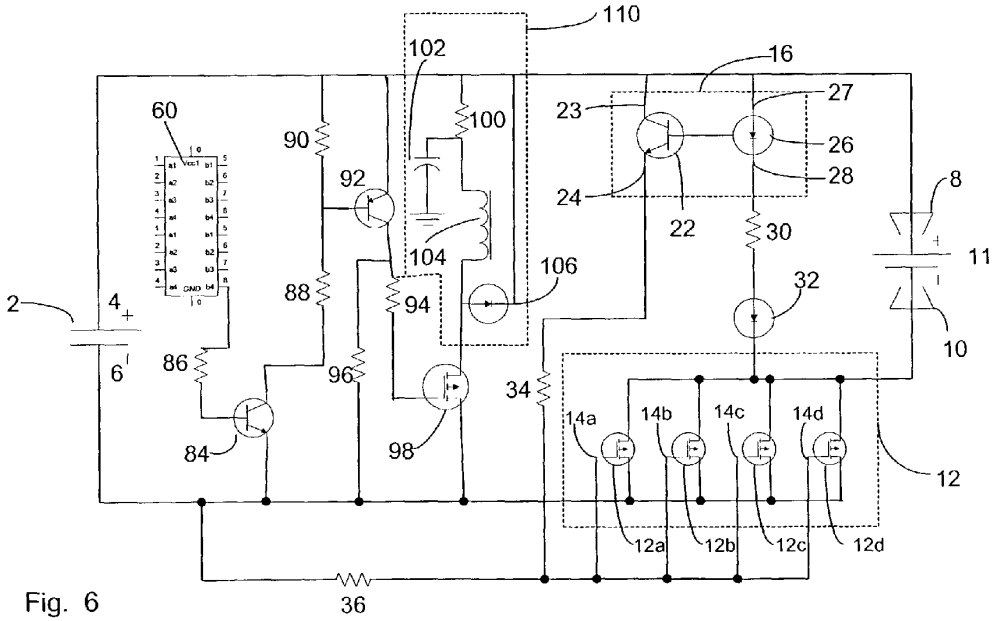

Fig. 6

DELTRAN EX1010
IPR2024-01219

MICROPROCESSOR CONTROLLED BOOSTER APPARATUS WITH POLARITY PROTECTION

CROSS-REFERENCE TO RELATED APPLICATIONS

[0001] This application claims priority from U.S. Provisional Application Ser. Nos. 60/357,146 filed Feb. 19, 2002 and 60/369,839 filed Apr. 5, 2002, the contents of both of which are incorporated herein by reference.

FIELD OF THE INVENTION

[0002] The present invention relates to a booster device used for boosting a depleted battery and in particular to microprocessor control of the booster apparatus and a polarity protection circuit.

BACKGROUND OF THE INVENTION

[0003] It is well known that when an engine of an automobile is not able to be started due to insufficient electric power, a battery of the automobile can be jump started by power from a battery of another automobile or from a battery in a booster device to thereby start the engine.

[0004] To boost the battery of the automobile which is of insufficient electric power by power from another battery, the two batteries must be connected through a pair of electric wires. For example, the positive terminal of the depleted battery should be connected to the positive terminal of the boosting battery. The negative terminals of the two batteries should be connected in a corresponding manner.

[0005] Making this connection, however, can be very dangerous if the batteries are connected incorrectly. A battery has a small internal resistance, and there is a voltage difference between a battery with sufficient electric power and a battery with insufficient electric power. Current will thus flow between the two batteries as soon as a connection is made. When the two batteries are connected correctly, which means that terminals of corresponding polarities are connected respectively as described above, a large current passes through the electric wires. When the two batteries are connected erroneously, a current which passes through the electric wires is 10 to 20 times larger than the current existing on the electric wires when the batteries are correctly connected. Additionally, incorrect connection may result in one or both of the batteries being short-circuited. Under such conditions, one or both of the batteries may be damaged, and in some cases, an explosion, fire and damage to the vehicle or to a person may result.

[0006] Thus, there is a need for a device, which can be used to ensure that the connection of the two batteries is made correctly and in a safe manner. The device should minimize any risk resulting from incorrect connection between the two batteries and from a short-circuit of one or both of the batteries.

[0007] The failure of an engine of an automobile to start due to insufficient electric power, in addition to being due to a battery with insufficient power, may also be due to a bad alternator that has failed to replenish the charge on an otherwise good battery. With a bad alternator, even if the battery is replaced, the new battery does not accumulate electric charge, and its charge is soon drained out again. A bad alternate r needs to be replaced in order to prevent recurring low battery problems. Detecting a bad alternator, however, is not an easy task to an inexperienced person.

[0008] Also, other simple tasks such as checking the air pressure of a tire, checking for freon gas leakage, and inflating a tire to a proper pressure can often be difficult to those without the necessary experience and know-how. It would also be convenient to know the state of the charge of the jump starter battery itself, as well as the state of charge the depleted battery before and after a jump start.

[0009] There is therefore a need for a self-contained jump starter system that can be used as a jump starter, tester, and diagnostic system for a vehicle to assist in performing vehicle diagnostics and minor vehicle repairs. There is also a need for a portable, self-contained jump starter system of the above type that is rugged, has a minimum number of components, is user friendly to people who are not experienced with automobiles, provides self-testing and vehicle diagnostics, and is relatively inexpensive so as to be affordable by a large number of consumers.

SUMMARY OF THE INVENTION

[0010] A polarity protection circuit is provided. According to an exemplary embodiment, the polarity protection circuit is comprised of solid-state devices. Preferably no mechanical or electro-mechanical devices, such as solenoids are included in the polarity protection circuit. The polarity protection circuit is electrically connected to the battery to be charged (depleted battery) and to a boosting battery or other power source. The polarity protection circuit prevents current flow between the batteries unless proper polarity is achieved. The polarity protection circuit is described below in the context of a battery booster device, but it can be used in conjunction with any charging or boosting device.

[0011] Typically, a battery booster device comprises a pair of cables connected at one end to a built-in battery or other power source arranged in a portable box. The other ends of the cables are connected to a pair of alligator clamps. The built-in battery provides a DC power source for boosting a depleted battery. When the clamps are connected to the depleted battery, current flows from the built-in battery of the battery booster device to the depleted battery. As mention above, a polarity protection circuit is provided in the booster device and prevents current flow between the batteries unless a proper polarity connection between the two batteries is achieved.

[0012] In a further embodiment, the battery booster device may also comprise a microprocessor. The microprocessor can be used as part of a polarity protection circuit. It may also perform additional detection and control functions, such as detecting a bad alternator, detecting a freon leak, and detecting low tire pressure and controlling an air compressor to address the low tire pressure. In connection with this, the booster device may further include a display and/or other notification devices, such as a visual or audio indicator.

[0013] In another embodiment of the invention, a polarity detection circuit is provided. The circuit comprises: cables for connecting a boosting battery to a depleted battery; a polarity sensing circuit coupled to the boosting battery for providing an enable signal when a correct polarity connection is made between the boosting battery and the depleted battery; and a solid state switch coupled to the polarity

DELTRAN EX1010
IPR2024-01219

sensing circuit, the solid state switch permitting current flow between the boosting battery and the depleted battery when it receives the enabling signal.

[0014] In another exemplary embodiment, a booster apparatus is provided. The apparatus comprises: a boosting battery having a positive terminal and a negative terminal; a first cable coupled to the positive terminal of the boosting battery and having a clamp for connection to a terminal of a depleted battery; a second cable coupled to the negative terminal of the boosting battery and having a clamp for connection to another terminal of the depleted battery; a solid state switch arranged in series with one of the cables; a polarity sensing circuit coupled between the first cable and the second cable, the polarity sensing circuit providing an enable signal to place the solid state switch in a conducting state when a correct polarity connection is made between the boosting battery and the depleted battery.

[0015] In a further embodiment, a booster apparatus comprises: means for providing power; means for connecting the means for providing power to a depleted battery; means for detecting polarity of the connection between the means for providing power and the depleted battery and for generating an enable signal when correct polarity is detected; and at least one field-effect transistor (FET) having a control electrode and being coupled to the means for detecting polarity, the control electrode receiving the enable signal and turning the FET on to allow current flow between the means for providing power and the depleted battery.

[0016] In another embodiment, a jump starter system comprises: a boosting battery having positive and negative terminals; a pair a battery cables having first ends connected to the positive and negative terminals, respectively, of the boosting battery and second ends adapted for connection to positive and negative terminals of a depleted battery; a semiconductor switch connected electrically with one of the terminals of the boosting battery and the battery cable respectively connected thereto; a polarity sensing circuit coupled to the battery cables and producing a first signal only when the battery cables connect the positive terminal of the boosting battery to the positive terminal of the depleted battery and the negative terminal of the boosting battery to the negative terminal of the depleted battery; and a microprocessor coupled to the semiconductor switch and the polarity sensing circuit and being responsive to the first signal from the polarity sensing circuit for activating the semiconductor switch to enable a current flow between the boosting battery and the depleted battery.

[0017] In another embodiment, a computer-readable information storage medium for use with a computer controlling a jump starter system, comprising a first battery having positive and negative terminals, a pair a battery cables having first ends connected to the positive and negative terminals, respectively, of the first battery and second ends adapted for connection to positive and negative terminals of a depleted battery in a vehicle, the computer-readable information storage medium sto res computer-readable program code for causing the computer to perform the steps of: checking for a rapid rise in voltage after the vehicle has been started; indicating the alternator is working properly if the rapid rise in voltage is present; and indicating the alternator is not working properly if the rapid rise in voltage is not present.

[0018] In another embodiment, a computer-readable information storage medium for use with a computer controlling a jump starter system, comprising a first battery having positive and negative terminals, a pair a battery cables having first ends connected to the positive and negative terminals, respectively, of the first battery and second ends adapted for connection to positive and negative terminals of a depleted battery, the computer-readable information storage medium stores computer readable program code for causing the computer to perform the steps of: measuring a charge rate of the battery; determining an amount of time the battery has been receiving a current; measuring a voltage of the battery; and detecting an overtime fault if the charge rate is greater than a predetermined current, the battery has been receiving a current longer than a predetermined amount of time, and the voltage of the battery is greater than or equal to a predetermined voltage.

[0019] In another embodiment, a computer-readable information storage medium for use with a computer controlling a jump starter system, comprising a first battery having positive and negative terminals, a pair a battery cables having first ends connected to the positive and negative terminals, respectively, of the first battery and second ends adapted for connection to positive and negative terminals of a depleted battery, the computer-readable information storage medium stores computer-readable program code for causing the computer to perform the steps of: measuring a charge rate of the battery; determining an amount of time the battery has been receiving a current; measuring a voltage of the battery; and detecting a shorted cell battery fault if the charge rate is greater than a predetermined current, the battery has been receiving a current more a predetermined amount of time, and the voltage of the battery is less than or equal to a predetermined voltage.

[0020] In another embodiment, a computer-readable information storage medium for use with a computer controlling a jump starter system, comprising a first battery having positive and negative terminals, a pair a battery cables having first ends connected to the positive and negative terminals, respectively, of the first battery and second ends including clamps adapted for connection to positive and negative terminals of a depleted battery, the computer-readable information storage medium stores computer-readable program code for causing the computer to perform the steps of: measuring a voltage at the clamps; indicating a bad battery fault if no voltage is detected at the clamps; and proceeding with a jump starting operation if a voltage is detected at the clamps.

[0021] In another embodiment, a computer-readable information storage medium for use with a computer controlling jump starter system, comprising a first battery having positive and negative terminals, a pair a battery cables having first ends connected to the positive and negative terminals, respectively, of the first battery and second ends adapted for connection to positive and negative terminals of a depleted battery, the computer readable information storage medium stores computer-readable program code for causing the computer to perform the steps of: measuring a charge current of the battery; determining an amount of time the battery has been receiving current; measuring a voltage of the battery; and detecting an open cell battery fault if the charge current is less than a predetermined current, the battery has been

DELTRAN EX1010
IPR2024-01219

receiving current more a predetermined amount of time, and the voltage of the battery is greater than or equal to a predetermined voltage.

BRIEF DESCRIPTION OF THE FIGURES

[0022] **FIG. 1** is a circuit schematic that illustrates a polarity protection circuit according to a preferred embodiment of the invention;

[0023] **FIG. 2** is a circuit schematic that illustrates a polarity protection circuit according to another preferred embodiment of the invention;

[0024] **FIG. 3** is a circuit schematic that illustrates a polarity protection circuit according to another preferred embodiment of the invention;

[0025] **FIG. 4** is a circuit schematic that illustrates a polarity protection circuit according to another preferred embodiment of the invention;

[0026] **FIG. 5** is a circuit schematic that illustrates a microprocessor controlled booster system according to another embodiment of the invention; and

[0027] **FIG. 6** is a circuit schematic that illustrates a microprocessor controlled booster system according to another embodiment of the invention.

DETAILED DESCRIPTION OF THE PREFERRED EMBODIMENTS

[0028] **FIG. 1** illustrates a battery booster device including a polarity protection circuit according to an exemplary embodiment of the invention. A boosting battery **2** with a positive terminal **4** and a negative terminal **6** is provided in the booster device. The positive terminal **4** of the boosting battery **2** is coupled to one of a pair of alligator clamps **8**, **10** to be connected to a battery to be charged **11** (depleted battery) via a wire or battery cable. The negative terminal **6** of the boosting battery **2** is connected to the other of the alligator clamps **8**, **10** to be connected to the battery to be charged **11** via a wire or battery cable.

[0029] A switch **12** is coupled to one of the wires or battery cables to be connected to the depleted battery **11**. The switch **12** is activated to complete a boosting circuit between the boosting battery **2** and the depleted battery **11** only when a correct polarity connection between the batteries is attained. In the embodiment shown, the switch **12** is arranged between the negative terminal **6** of the boosting battery **2** and the alligator clamp **10** intended to be connected to the negative terminal of the depleted battery **11**. The switch **12** is thus a current handling device a nd part of the boosting circuit. Of course, other locations of the switch in the boosting circuit are possible.

[0030] The switch **12** is preferable a solid state device, such as a transistor, diode, field effect transistor (FET), etc. **FIG. 1** represents the switch **12** as a number FETs **12***a*-**12***d* connected in parallel with each other. The FETs **12***a*-**12***d* are preferably high power, very low on-resistance types. The number of FETs provided depends upon the current flow in the circuit and the type of FET used. Control electrodes **14***a*-**14***d* of the FETs **12***a*-**12***d* are electrically connected to the negative terminal **6** of the boosting battery through a resistor **36**. This arrangement maintains the FETs **12***a*-**12***d* in an off or non-conducting state when there is no voltage at the clamps, preventing current flow from the boosting battery **2** to clamps **8**, **10** and to the depleted battery **11**.

[0031] The switch **12** is activated by a polarity sensing circuit **16** to allow current flow from the boosting battery **2** to the depleted battery **11**. The polarity sensing circuit **16** is coupled to the boosting battery **2** and to the depleted battery **11** when the clamps **8**, **10** are connected to the depleted battery **11**. The polarity sensing circuit **16** senses the polarity of the connection between the boosting battery **2** and the depleted battery **11** and provides a signal indicating the state of the connection. The signal from the polarity sensing circuit **16** is provided to the switch **12**. When a proper polarity connection is signaled, the switch **12** completes the boosting circuit and permits current flow to the depleted battery **11**.

[0032] In the embodiment shown in **FIG. 1**, the polarity sensing circuit comprises an opto-isolator **16**. The opto-isolator **16** comprises a phototransistor **22** and a light emitting diode (LED) **26**. A collector **23** of the phototransistor **22** and an anode **27** of the LED **26** are electrically connected to the positive terminal **4** of the boosting battery **2**. The emitter **24** of the phototransistor **22** is electrically connected to control electrodes **14***a*-**14***d* of the FETs **12***a*-**12***d* comprising the switch **12** via resistor **34**. The cathode **28** of the LED **26** is electrically connected to one of the electrodes of the FETs **12***a*-**12***d* through resistor **30** and diode **32**. The other of the electrodes of the FETs **12***a*-**12***d* is electrically connected to the negative terminal **6** of the boosting battery **2**.

[0033] During operation of the battery booster device depicted in **FIG. 1**, the FETs **12***a*-**12***d* are initially held in a non-conducting state via resistor **36**. The opto-isolator **16** only turns on when it is properly biased as a result of a correct polarity connection being made between the boosting battery **2** and the depleted battery **11**. When the LED **26** is properly biased, phototransistor **22** in the opto-isolator **16** turns on. Current flow through phototransistor **22** biases the control electrodes of the FETs **12***a*-**12***d* into a conducting state, enabling current flow through the FETs **12***a*-**12***d* to the depleted battery **11**. More specifically, when the depleted battery **11** is properly connected to the boosting battery **2** as shown in **FIG. 1**, the LED **26** and diode **32** are forward biased. Current thus flows through these diodes and resistor **30**. Resistor **30** is provided to regulate the amount of current that flows through the opto-isolator **16**. The current flow through LED **26**, resistor **30** and diode **32** activates the phototransistor **22**, turning it on. When the phototransistor **22** is turned on, current flows through the phototransistor **22**, resistor **34** and to the control electrodes of the FETs **12***a*-**12***d*. The control electrodes of the FETs **12***a*-**12***d* are activated in response to this current, and the FETs **12***a*-**12***d* are turned on into a conducting state. The boosting circuit is now closed, and current can flow from the boosting battery **2** through the FETs **12***a*-**12***d* to the depleted battery **11**. The re is no need for any mechanical or electro-mechanical devices, as the FETs are the current handling devices.

[0034] When an improper polarity connection is made between the boosting battery **2** and the depleted battery **11**, as shown in **FIG. 2**, the LED **26** in the opto-isolator **16** and diode **32** are reversed biased. Diode **32** prevents current flow from the depleted battery **11** in a reverse direction. Thus, there is essentially no current flow through the LED **26**,

DELTRAN EX1010
IPR2024-01219

diode **32** and resistor **30**. Consequently, the phototransistor **22** in the opto-isolator **16** is in a non-conducting state. In turn, the FETs **12***a*-**12***d* of the switch are in a non-conducting state, and there is essentially no current flow from the boosting battery **2** to the depleted battery **11**, preventing a potentially dangerous situation.

[**0035**] Once a proper polarity connection is made between the batteries, the depleted battery **11** is charged or the vehicle is jump started. The alligator clamps **8**, **10** are then disconnected from the battery to be charged **11**. When the clamps are disconnected, diode **26** is no longer forward biased and no current flows therethrough, turning the phototransistor **22** in the opto-isolator off, which in turn, turns the FETs **12***a*-**12***d* off. The boosting circuit is then, in effect, reset, preventing short-circuits or a reverse polarity connection being made after a proper polarity connection is made. In a further embodiment, described below in conjunction with **FIG. 3**, the battery booster device can be provided with a disable switch that interrupts the boosting circuit to ensure the safe disconnection of the clamps from the depleted battery **11** or a microprocessor or other circuitry can be programmed to detect when the depleted battery is disconnected.

[**0036**] Turning now to **FIG. 3**, another embodiment of the present invention is described. The embodiment shown in **FIG. 3** operates in a similar manner to the embodiment described above in regard to **FIG. 1**. **FIG. 3** differs from **FIG. 1** in that **FIG. 3** includes a frequency generator and a frequency detector. The frequency generator and frequency detector are used to detect disconnection of the clamps **8**, **10** from the depleted battery **11** or other interruption of the boosting circuit. The frequency generator **37** is adapted to inject a signal of a particular frequency into the boosting circuit. A frequency detector **38** is adapted to detect the frequency injected into the boosting circuit by the frequency generator **37**. The frequency generator **37** and frequency detector **38** are preferably arranged on opposite sides of depleted battery **11**. When the depleted battery **11** is connected with proper polarity, a path exists for the frequency injected by the frequency generator **37** to travel through the circuit. The frequency detector **38** detects the injected frequency, and the battery boosting process proceeds normally. When the clamps **8**, **10** are removed from the depleted battery **11** or the circuit is otherwise interrupted, current flow is stopped, and the frequency detector **38** no longer detects the frequency injected by the frequency generator **37**. The frequency detector is adapted to then turn FETs **12***a*-**12***d* to a non-conducting state, resetting the boosting circuit. This prevents short circuits or a reverse polarity connection being made after a proper polarity connection has been established.

[**0037**] **FIG. 4** illustrates another embodiment of the present invention. The embodiment shown in **FIG. 4** includes many of the same elements described above in connection with FIGS. **1**-**3**. These same elements are labeled with the same reference numbers in all the figures. The circuit shown in **FIG. 4** operates in a manner similar to that described above in regard to FIGS. **1**-**3**, and only the differences are described in detail below.

[**0038**] The embodiment of the invention shown in **FIG. 4** includes an indicator **40** for indicating when a proper polarity connection between booster battery **2** and depleted battery **11** is established. The indicator **40** may provide a visual or audio indication to a user that a proper polarity connection has or has not been established. The indicator **40** illustrated in **FIG. 4** includes a resistor **41** and an LED **42**. When the alligator clamps **8**, **10** are connected to the depleted battery **11**, the resistor **41** and LED **42** are connected across the terminals of the depleted battery **11**. If the alligator clamps **8**, **10** are connected to depleted battery **11** with an incorrect polarity, LED **42** is forward biased and is illuminated indicating an incorrect connection. However, essentially nothing else occurs in the boosting circuit. The opto-isolator **16** prevents any other current flow. For example, the LED **26** in the opto-isolator **16** and diode **32** are reversed biased, preventing current flow in a reverse direction. Thus, there is no current flow through these diodes and resistor **30**. Consequently, the phototransistor **22** in the opto-isolator **16** remains off. In turn the FETs **12***a*-**12***d* remain in a non-conducting state and there is no current flow from the boosting battery **2** to the depleted battery **11**.

[**0039**] If the alligator clamps **8**, **10** are connected to the depleted battery **11** with a proper polarity the LED **42** is reverse biased and is not illuminated. The opto-isolator **16** is turned on, and the boosting circuit is completed as described above in connection with **FIG. 1**.

[**0040**] In some instances during the jump-starting process, the voltage of the boosting battery **2** may drop to low levels, for example, 2 volts or lower. In such instances, the voltage of the boosting battery **2** may become insufficient to maintain the FETs **12***a*-**12***d* in a conducting state. Thus, a means for maintaining the FETs **12***a*-**12***d* in a conducting state is provided. In the embodiment shown in **FIG. 4**, this means comprises a diode **44** and a capacitor **46** arranged in series with each other and connected across the terminals **4**, **6** of the boosting battery **2**. An anode of diode **44** is coupled to the positive terminal **4** of the boosting battery **2**. The collector of the phototransistor **22** in the opto-isolator **16** is coupled between the diode **44** and the capacitor **46**. The combination of the diode **44** and the capacitor **46** provides a high level of gate voltage that is required to keep the FETs **12***a*-**12***d* in a conducting state even if the boosting battery's voltage decays to a low level.

[**0041**] The embodiment of **FIG. 4** also includes a means for interrupting the current flow to the depleted battery **11** after a proper polarity connection has been established. This means for interrupting allows for safe removal of the alligator clamps **8**, from the depleted battery **11**. The means for interrupting in the illustrated embodiment includes a combination of capacitor **48**, resistor **50**, switch **52** and transistor **53**. These elements are used to turn the FETs **12***a*-**12***d* into a non-conducting state to allow for safe removal of the alligator clamps **8**, **10**. For example, switch **52** is coupled to one of the cables attached to one of clamps **8**, **10**. Resistor **50** and capacitor **48** are coupled to the other of the cables and connected in series with switch **52**. Switch **52** may be a momentary switch that when depressed, charges capacitor **48** through resistor **50**. The charging of capacitor **48** turns transistor **53** into a conducting state. The current flow from phototransistor **22** in the opto-isolator **16** is thus short-circuited across the control electrodes of the FETs **12***a*-**12***d*, turning the FETs **12***a*-**12***d* into a non-conducting state. Thus, the connection between the two batteries **2**, **11** is open circuited and the alligator clamps **8**, **10** can be safely removed from depleted battery **11**.

DELTRAN EX1010
IPR2024-01219

[0042] Further, an indicator for indicating it is safe to remove the alligator clamps from the depleted battery **11** may also be provided. In **FIG. 4**, the indicator includes LED **54**, resistor **56** and transistor **58** coupled in series between the cables. A control electrode of the transistor **58** is coupled to switch **52**. When switch **52** is depressed, transistor **58** is turned on by the current flow through the switch **52**. Current thus flows through the transistor **58** and resistor **56**, illuminating LED **54**. Illuminated LED **54** indicates it is safe to remove the alligator clamps **8**, **10** from the depleted battery **11**.

[0043] Referring now to **FIG. 5**, an example of a microprocessor controlled jump starter system according to an embodiment of the invention is described. The microprocessor **60** can be programmed to perform essentially all of the control functions needed for operation of the jump starter. A display **64** and an input device **66** may be coupled to the microprocessor **60** to enable an operator to receive information from and input information into the microprocessor **60**, respectively.

[0044] By way of a feedback circuit or other means, the microprocessor **60** can monitor the voltage and/or current being supplied to the depleted battery **11** from the booster battery **2**, the voltage and/or current of the battery **11** and can detect short circuits or other faults, as described in more de tail below. A resistive divider may be used to provide the voltage and current measurements to the microprocessor's A/D input. A visual or audio indication of the faults is given, for example on display **64**. A scrolling message describing the fault, a representative code, or other message may be displayed.

[0045] In this embodiment, microprocessor **60** is used to control the switch **12**. Opto-isolator **16** is coupled to clamps **8**, **10** via resistor **62** such that LED **26** is forward biased when a correct polarity connection between the boosting battery **2** and the depleted battery **11** is made. When forward biased, LED **26** turns on phototransistor **22**. The collector **23** of the phototransistor **22** is coupled to a supply voltage via internal circuitry in the microprocessor **60**. When the phototransistor **22** is on, a first signal of a first voltage is present at the collector **23** and is sensed by the microprocessor **60**. When the phototransistor **22** is off, a second signal of a second voltage is present at the collector **23** and is sensed by the microprocessor **60**. The microprocessor **60** provides output signals to activate the switch **12** into a conducting state when it receives the first signal and provides an output signal to deactivate the switch **12** into a non-conducting state when it receives the second signal. Additionally, the microprocessor can deactivate switch **12** to terminate the jump starting process when a fault is detected.

[0046] The output signals from the microprocessor **60** to control switch **12** are provided to control electrodes **14***a*-**14***d* of transistors **12***a*-**12***d*, as shown in **FIG. 5**. The control electrodes **14***a*-**14***d* of the transistors are electrically connected to the microprocessor **60** via a level translator **68**. Microprocessors normally run on low voltages, e.g., 5 volts. A low voltage power supply is provided to the microprocessor **60** from battery **2** via a voltage regulator **70**. The low voltage output signals from the microprocessor **60** should be translated to higher voltages before being supplied to the transistors **12***a*-**12***d*. The level translator **68** translates the output voltage of the microprocessor **60** to the higher levels that are needed to operate transistors **12***a*-**12***d*. Accordingly, the output signals from the microprocessor **60** are used by the level translator **68** to generate control signals for the control electrodes of the FETs.

[0047] If the polarity connections of clamps **8**, **10** to the depleted battery **11** are not correct, the switch **12** remains off. The display **64** may be controlled by the microprocessor **60** to display a message indicating reverse polarity. The microprocessor **60** may additionally activate an alarm such as buzzer **72** in response to the incorrect polarity connection.

[0048] Microprocessor **60** can be programmed to detect if clamps **8**, **10** are connected to a battery or have been disconnected. To perform the detection, the microprocessor **60** deactivates the switch **12** into a non-conducting state. Via the feedback circuit or other means, the microprocessor detects whether clamps **8**,**10** are connected to a battery. If no battery is present, the switch **12** is placed in a non-conducting state, that is, all the FETs **12***a*-**12***d* are placed in a non-conducting state. If a battery is present, the jump starting process continues. The check is preferably performed about once a second and takes less than a few thousandths of a second to complete. As such, the check is transparent to the operation of the jump starter. A comparator or operational amplifer can also be used to perform this check.

[0049] The microprocessor **60** may also be used to conduct a test of an alternator of a vehicle. When the alternator of a vehicle is working properly, the voltage level of the depleted battery **11** rises rapidly immediately after the battery is jump-started. The rapid rise in voltage can be detected by the microprocessor **60** based on the signals the microprocessor receives from opto-isolator circuit **16**. If a rapid rise in voltage is detected, a message that the alternator is working properly may be shown on display **64**. If no rapid rise in voltage is detected, then a message that the alternator may be malfunctioning can be shown on display **64**. The rapid rise in voltage may vary depending on how depleted the battery **11** is. The microprocessor is preferably programmed to account for this variance.

[0050] According to a further embodiment of the invention, the booster system may include a freon gas leakage sensor. The sensor **74** may comprise a thermistor for sensing temperature changes due to the extreme cold produced at the point of a freon leak. The sensor **74** may alternatively comprise a transducer, such as a pressure transducer, to sense the point of a freon leak, since freon is under a high pressure in the system and the point of a leak presents a high pressure zone. The sensor is coupled to the microprocessor **60**. The sensor generates an electrical signal upon detection of some physical change, e.g., a temperature or pressure change accompanying freon gas leakage. Upon receiving such a signal from the sensor **74**, the microprocessor **60** may cause a message indicating a leak to appear on the display **64**.

[0051] According to another embodiment of the invention, the booster system includes means for checking the inflation of the tires of the vehicle. An air pressure sensor **76** may be provided to measure the air pressure of the tires. The air pressure sensor **76** is coupled to an input of the microprocessor **60**. The microprocessor **60** receives an air pressure measurement from the air pressure sensor **76** and displays the air pressure to the operator via display **64**. Additionally,

DELTRAN EX1010
IPR2024-01219

a built-in compressor **78** can be connected to the microprocessor **60** through a switch **80**. According to this embodiment of the invention, a desired pressure is selected via the input device **66**. The compressor **78** is then controlled by microprocessor **60** to inflate the tire to the selected a ir pressure. The compressor **78** is automatically deactivated by the microprocessor **60** when the desired pressure is attained.

[**0052**] According to yet another embodiment of the invention, the microprocessor **60** can be programmed to detect the charge levels of the boosting battery **2** and the depleted battery **11**. The detected charge levels can then be communicated to an operator via display **64**. Voltage regulator **70** is coupled to the boosting battery **2** and the depleted battery **11** for detecting their charge levels.

[**0053**] In order to measure the charge level of the boosting battery **2**, clamps **8**, **10** should be disconnected from the depleted battery **11**. The voltage regulator then produces a voltage proportional to the voltage of the boosting battery **2**, and which is within the operating range of the microprocessor **60**. The microprocessor **60** is programmed to detect when the voltage of the boosting battery **2** falls below a predetermined level, for example, about 80% of its rated value. The buzzer **72** or other device can then be activated to indicate to the operator that the charge of the boosting battery **2** is low and that it should be recharged. The booster system may be plugged into a standard 110/220-volt electrical outlet via a standard wall charger **82** to recharge the boosting battery **2**.

[**0054**] In order to measure the voltage of the depleted battery **11**, switch **12** between the boosting battery **2** and the depleted battery **11** should be in a non-conducting state. Microprocessor **60** can be controlled via operator input from input device **66** to place switch **12** in a non-conducting state. Clamps **8**, **10** are then connected to the depleted battery **11**. The voltage regulator produces a voltage proportional to the voltage of the depleted battery **11**. The microprocessor **60** receives this signal from the voltage regulator **70** and determines and displays the voltage of the depleted battery **11** on display **64**.

[**0055**] The microprocessor **60** can also be programmed to detect a bad battery or a battery whose voltage is too low to be jump started. Normally, even a dead battery has some voltage, usually about 3-5 volts. Occasionally, however, a battery does not have any voltage as it is so deeply depleted that the battery is totally dead. This type of battery cannot be immediately jump started, and sometimes it can not even be charged at all. When the clamps **8**, **10** are connected to this type of battery, it is as if the jump starter is not connected to anything. As the voltage of such a battery is extremely low, the microprocessor **60** does not detect any voltage at the clamps **8**, **10**. A fault is displayed if an attempt is made to jump start a vehicle with this type of battery.

[**0056**] This type of fault may also be detected if there is no battery connected to clamps **8**,**10** or a poor connection is made to the depleted battery **11** and the jump starter is activated. When the fault occurs, the microprocessor **60** can be programmed to terminate the jump starting process and to display a suggestion to a user that the battery be reconditioned before jump starting is attempted or to check if the clam ps **8**, **10** are properly connected to the battery **11**.

[**0057**] In another embodiment of the invention, the microprocessor **60** is programmed to determine the cold-cranking amps (CCA) available from the depleted battery **11**. CCA is the amount of power exerted by a battery when starting a vehicle on a cold day. The definition by Battery Council International (BCI) is the discharge load in amperes which a new fully charged battery at 0 degrees Farenheit can deliver for 30 seconds and maintain a voltage of 1.2 volts per cell or higher.

[**0058**] CCA is determined in the described embodiment by connecting a resistance in parallel with the battery **11**. The resistance should be connected for a short period of time so not to drain the battery. The voltage of the battery is determined when under the load of the resistance. The lower the voltage of the battery under the load is, the lower the CCA of the battery is. The microprocessor is programmed to correlate the measured voltage to a CCA value. The CCA value may then be displayed to the user.

[**0059**] If a battery has a shorted cell, it is unlikely that the battery voltage will increase as it is attempted to provide a charge to the battery and jump start the vehicle. However, a charge must be provided to the battery for some period of time before it can be determined if the battery has a shorted cell. The microprocessor **60** can be programmed to monitor the voltage, current, and time of charging to detect a shorted cell. If a charge rate of the battery is greater than a predetermined current, the battery has been charging more a predetermined amount of time, and the voltage of the battery is less than or equal to a predetermined voltage, a shorted cell is detected. For example, if the charge rate of the battery is greater than 2 amps, the battery has been charging for more than 1 hour, and the voltage of the battery is less than or equal to about 11 volts, the jump starting process is terminated, and a shorted cell fault is indicated to the user.

[**0060**] The process for detecting an open cell battery is similar to the process for detecting a shorted cell battery. An open cell battery has some voltage due to leakage between the open cell and its connectors. However, the open cell battery does not have the ability to either accept or deliver current. When the jump starter is connected to an open cell battery, the microprocessor detects a voltage at the clamps **8**, **10**, but when the jump starting process begins, no appreciable current is detected. If no current is detected after a predetermined period of time, for example five minutes, an open cell battery is detected, the jump starting process is ended, and the appropriate fault displayed.

[**0061**] Many vehicles have interface ports for providing basic engine diagnostic data. The jump starter system may further have an interface for downloading basic engine diagnostic data from an interface port of such vehicles. The jump starter system may additionally have a printer port for printing information for record keeping or analysis. Memory inside the microprocessor **60** can be used for storing data that is used for later review and analysis.

[**0062**] Further, the microprocessor **60** may run a self-test on the booster to determine whether all components of the booster system are running properly. Each component is turned on and off quickly to determine if any malfunctions exist. Results of the self-test may be displayed on the display **64**. Buzzer **72** or another alarm may be activated to indicate any malfunctions.

[**0063**] Also, the microprocessor **60** can be programmed to sound the buzzer **72** or other alarm when there is information

DELTRAN EX1010
IPR2024-01219

shown on the display **64** and when there is an error/fault condition, such as detection of a low charge level of the changing battery **2** or detection of a bad alternator.

[**0064**] In another embodiment, the microprocessor **60** controls a de-sulfating process. The electrode plates of lead-acid vehicle batteries collect sulfur deposits over time which eventually render the battery useless. However, by removing the sulfur deposits from the plates, such a battery can be rejuvenated, that is, re-conditioned. It is known that battery reconditioning can be achieved by applying periodic short current bursts (on the order of microseconds) from the boosting battery **2** to the depleted battery **11**. According to this embodiment of the invention, the microprocessor **60** is programmed to initiate the de-sulfating process through its control of the switch **12** and to display a "de-sulfating in progress" message on the display **64**. An exemplary embodiment of circuitry that may be used to perform the de-sulfating process is shown in **FIG. 6**.

[**0065**] **FIG. 6** includes many of the same components discussed above in regard to the preceding figures. In addition to those components, a transistor **84** is coupled to microprocessor **60** via resistor **86**. Microprocessor **60** outputs a signal to a control electrode of transistor **84**, turning transistor **84** on and off. When transistor **84** is turned on, current flows through resistors **88** and **90**, turning on transistor **92**. In turn, current flows through transistor **92**, and resistors **94** and **96**, turning on transistor **98**. Transistor **98** acts as a switch for activating a pulse generating circuit **110** that generates a pulsing current used to condition the battery **11**. When transistor **98** is in a conducting state, current flows through resistor **100**, capacitor **102**, inductor **104**, and diode **106**, which comprise the pulse generating circuit **110**, to generate a current pulse.

[**0066**] The display **64**, which may be, for example, a scrolling or flashing display, displays information available to the microprocessor **60** which may include, but which is not limited to, results of the self test, the status or condition (e.g., percent of charge) of the jump starter battery **2** as well as of the depleted **11**, a "Warning: Reverse Polarity" message if a polarity of connections of the jump starter system is not correct, a "Ready to Start" message when everything is properly connected, a "De-Sulfating in Progress" message when a de sulfating process is in progress, and various other diagnostics including, for example, detection of a bad alternator, desired and actual pressure readings from those jump starter systems that have air compressors and/or pressure sensors, and freon gas leakage readings for those jump starter systems that have freon gas leakage sensors.

[**0067**] In summary, the microprocessor can be programmed to control the polarity protection operation, performing of diagnostics of the vehicle battery and other systems, scanning of the display, various functions of the microprocessor initiated by operator input through the input device, conducting a de-sulfating process, activating the buzzer or other alarm, detection of freon leaks, basic engine diagnostics which may interface with the vehicle's interface port, re-charging the jump starter battery, and inflation of tires based on a stored value or on user input. The above listing of functions is intended to be exemplary and is not exhaustive of the types of functions that the microprocessor can control in the context of the jump starter system disclosed herein. The embodiments illustrated and discussed in this specification are intended only to teach those skilled in the art the best way known to the inventors to make and use the invention. Nothing in this specification should be considered as limiting the scope of the present invention. The above-described embodiments of the invention may be modified or varied, and elements added or omitted, without departing from the invention, as appreciated by those skilled in the art in light of the above teachings. It is therefore to be understood that, within the scope of the claims and their equivalents, the invention may be practiced otherwise than as specifically described.

We claim:

1. A polarity detection circuit, comprising:

cables for connecting a first battery to a depleted battery;

a polarity sensing circuit coupled to the first battery for providing an enable signal when a correct polarity connection is made between the first battery and the depleted battery; and

a solid state switch coupled to the polarity sensing circuit, the solid state switch permitting current flow between the first battery and the depleted battery when it receives the enable signal.

2. The polarity detection circuit of claim 1, further comprising:

a safety switch that when activated prevents the solid state switch from permitting current flow between the first battery and the depleted battery.

3. The polarity detection circuit of claim 1, wherein the polarity sensing circuit comprises an opto-isolator.

4. The polarity detection circuit of claim 1, wherein the polarity sensing circuit comprises an LED coupled to one of the cables, the diode being forward biased when a correct polarity connection is made between the first battery and the depleted battery; and

a phototransistor coupled to the diode, current flow through the forward biased LED turning on the phototransistor to provide the enable signal.

5. The polarity detection circuit of claim 1, wherein the solid state switch comprises at least one transistor.

6. The polarity detection circuit of claim 5, wherein the current from the first battery flows through the at least one transistor to the depleted battery.

7. The polarity detection circuit of claim 1, wherein the solid state switch comprises at least one FET having a control electrode, the control electrode receiving the enable signal to place the FET into a conducting state.

8. The polarity detection circuit of claim 7, wherein the FET is a part of a current path between the first battery and the depleted battery.

9. The polarity detection circuit of claim 1, further comprising a frequency generator coupled to one of the cables and injecting a signal of a predetermined frequency into that cable.

10. The polarity detection circuit of claim 9, further comprising a frequency detector coupled to the other one of the cables, the frequency detector preventing the solid state switch from permitting current flow between the first battery and the depleted battery when the frequency detector ceases to detect the signal of predetermined frequency injected by the frequency generator.

DELTRAN EX1010
IPR2024-01219

11. A booster apparatus, comprising:

a first battery having a positive terminal and a negative terminal;

a first cable coupled to the positive terminal of the first battery and being provided with means for connecting to a terminal of a depleted battery;

a second cable coupled to the negative terminal of the first battery and being provided with means for connecting to another terminal of the depleted battery;

a solid state switch coupled in series with one of the cables and the first battery;

a polarity sensing circuit coupled between the first cable and the second cable, the polarity sensing circuit providing an enable signal to place the solid state switch in a conducting state when a correct polarity connection is made between the first battery and the depleted battery.

12. The booster apparatus of claim 11, wherein only a single cable is connected to each terminal of the depleted battery.

13. The booster apparatus of claim 11, wherein the solid state switch comprises a plurality of transistors connected in parallel with each other between one of the means for connecting and one of the terminals of the first battery.

14. The booster apparatus of claim 13, wherein the transistors are a part of a current path between the first battery and the depleted battery.

15. The booster apparatus of claim 11, further comprising:

a frequency generator coupled to one of the first and second cables and injecting a frequency into that cable; and

a frequency detector coupled to the other one of the first and second cables, the frequency detector opening the solid state switch when the frequency detector ceases to detect the frequency from the frequency generator.

16. The booster apparatus of claim 11, further comprising a microprocessor coupled to the solid state switch and the polarity sensing circuit and being responsive to the enable signal from the polarity sensing circuit to control the solid state switch to enable a current flow between the first battery and the depleted battery.

17. The booster apparatus of claim 16, wherein the depleted battery is intended for use in a vehicle.

18. The booster apparatus of claim 16, further comprising a display coupled to the microprocessor for displaying selected outputs of the microprocessor and an input device for accepting operator inputs to the microprocessor for controlling the jump starter system.

19. The booster apparatus of claim 16, further comprising at least one sensor connected to an input of the microprocessor for producing a signal representing a measured value.

20. The booster apparatus of claim 16, further comprising an audible alarm connected to an output of the microprocessor, wherein the microprocessor is connected to the first battery for automatically measuring the voltage of the first battery and producing a signal to activate the alarm when the voltage of the first battery is below a predetermined level.

21. The booster apparatus of claim 18, further comprising an air compressor controlled by an output of the microprocessor.

22. The booster apparatus of claim 21, wherein the microprocessor is programmed to accept a desired tire inflation pressure value input by an operator via the input device and to display the desired pressure on the display, the microprocessor automatically controlling the air compressor to inflate a tire to the desired pressure by comparing a measured pressure of the tire to the desired pressure until the desired pressure is attained.

23. The booster apparatus of claim 16, wherein the polarity sensing circuit comprises an opto-isolator.

24. The booster apparatus of claim 23, wherein the opto-isolator includes a uni-directional current conducting, light emitting component that only conducts current when the battery cables connect the positive terminal of the first battery to the positive terminal of the depleted battery and the negative terminal of the first battery to the negative terminal of the depleted battery.

25. The booster apparatus of claim 16, further comprising:

a safety switch opening the solid state switch to thus disable current flow between the first battery and the depleted battery.

26. The booster apparatus of claim 16, further comprising:

a high voltage providing circuit for keeping the solid state switch in a conducting state even if the voltage of the first battery decays to a low level.

27. The booster apparatus of claim 25, further comprising:

an indicator for indicating that the cables can be safely removed from the depleted battery.

28. The booster apparatus of claim 16, further comprising:

an indicator for indicating that a correct polarity connection is made between the first battery and the depleted battery.

29. The booster apparatus of claim 16, further comprising:

a measurement device for measuring the voltage of at least one of the first battery and the depleted battery.

30. The booster apparatus of claim 29, wherein the voltage is measured at least one of before the depleted battery is charged and after the depleted battery is charged.

31. The booster apparatus of claim 16, further comprising:

a de-sulfating circuit controlled by the microprocessor for de-sulfating a battery.

32. The booster apparatus of claim 16, further comprising means for detecting a voltage surge after the depleted battery is jump started.

33. The booster apparatus of claim 16, wherein the microprocessor is programmed to detect a voltage surge after the depleted battery is jump started.

34. A portable booster apparatus, comprising:

means for providing power;

means for connecting the means for providing power to a depleted battery;

means for detecting polarity of the connection between the means for providing power and the depleted battery and for generating an enable signal when a correct polarity is detected; and

at least one FET having a control electrode and being coupled to the means for detecting polarity, the control electrode receiving the enable signal and placing the FET into a conducting state to allow current flow between the means for providing power and the depleted battery.

DELTRAN EX1010
IPR2024-01219

35. The booster apparatus of claim 34, further comprising means for indicating a correct polarity connection to a user.

36. The booster apparatus of claim 35, wherein the means for indicating comprises a LED.

37. The booster apparatus of claim 34, further comprising means for interrupting current flow after a correct polarity connection has been established.

38. The booster apparatus of claim 37, further comprising at least one sensor connected to an input of the microprocessor for producing a measured signal representing the presence of the depleted battery at the means for connecting and wherein the means for interrupting comprises a microprocessor programmed to place the FET in a non-conducting state if no depleted battery is present.

39. The booster apparatus of claim 38, wherein the microprocessor is programmed to place the at least one FET in a non-conducting state, then check the measured signal about once every second, and place the at least one FET in a conducting state if a depleted battery is present.

40. The booster apparatus of claim 37, wherein the means for interrupting comprises a momentary switch adapted to short circuit the control electrode of the FET when depressed.

41. The booster apparatus of claim 37, further comprising an indicator for indicating when current flow has been interrupted.

42. The booster apparatus of claim 34, further comprising:

means for injecting a signal of a predetermined frequency into the means for connecting; and

means for detecting frequency coupled to the means for connecting on an opposite side of the depleted battery than the means for injecting, the means for detecting placing the FETs into a non-conducting state when the means for detecting ceases to detect the frequency from the means for injecting.

43. The booster apparatus of claim 34, wherein the means for detecting polarity comprises an opto-isolator.

44. A jump starter system, comprising:

a first battery having positive and negative terminals;

a pair a battery cables having first ends connected to the positive and negative terminals, respectively, of the first battery and second ends adapted for connection to positive and negative terminals of a depleted battery;

means for measuring a charge rate of the depleted battery;

means for determining an amount of time the depleted battery has been charging;

means for measuring a voltage of the depleted battery; and

means for detecting at least one of an overtime fault, a shorted cell battery fault, a bad battery fault, and an open cell battery fault based on at least one of the charge rate, amount of time and voltage of the depleted battery.

45. The charger claim 44, further comprising a display on which fault is visually indicated.

46. The charger of claim 44, wherein the means for detecting detects the overtime fault if the charge rate is greater than a predetermined current, the depleted battery has been charging longer than a predetermined amount of time, and the voltage of the depleted battery is greater than or equal to a predetermined voltage.

47. The charger claim 46, wherein the predetermined current is 2 amps, the predetermined time is 18 hours, and the predetermined voltage is 12 volts.

48. The charger of claim 44, wherein the means for detecting detects the shorted cell battery fault if the charge current is greater than a predetermined current, the depleted battery has been charging more a predetermined amount of time, and the voltage of the depleted battery is less than or equal to a predetermined voltage.

49. The charger claim 48, wherein the predetermined time is 1 hour, and the predetermined voltage is 11 volts.

50. The charger of claim 44, wherein the means for detecting detects the bad battery fault if no voltage is detected at the means for measuring.

51. The charger of claim 44, wherein the means for detecting detects the open cell battery fault if the charge current is less than a predetermined current, the depleted battery has been charging more a predetermined amount of time, and the voltage of the depleted battery is greater than or equal to a predetermined voltage.

52. A computer-readable information storage medium for use with a computer controlling a jump starter system, comprising a first battery having positive and negative terminals, a pair a battery cables having first ends connected to the positive and negative terminals, respectively, of the first battery and second ends adapted for connection to positive and negative terminals of a depleted battery, the computer-readable information storage medium storing computer-readable program code for causing the computer to perform the steps of:

measuring a charge rate of the depleted battery;

determining an amount of time the depleted battery has been charging;

measuring a voltage of the depleted battery; and

detecting at least one of an overtime fault, a shorted cell battery fault, a bad battery fault, an open cell battery fault, and an alternator fault based on at least one of the charge rate, amount of time and voltage of the battery.

53. The computer-readable information storage medium of claim 52 further comprising code for causing the computer to perform the step of visually indicating the fault on a display.

54. The computer-readable information storage medium of claim 52 further comprising code for causing the computer to perform the step of detecting the overtime fault if the charge rate is greater than a predetermined current, the depleted battery has been charging longer than a predetermined amount of time, and the voltage of the depleted battery is greater than or equal to a predetermined voltage.

55. The computer-readable information storage medium of claim 54, wherein the predetermined current is 2 amps, the predetermined time is 18 hours, and the predetermined voltage is 12 volts.

56. The computer-readable information storage medium of claim 52 further comprising code for causing the computer to perform the step of detecting the shorted cell battery fault if the charge current is greater than a predetermined current, the depleted battery has been charging more a

DELTRAN EX1010
IPR2024-01219

predetermined amount of time, and the voltage of the depleted battery is less than or equal to a predetermined voltage.

57. The computer-readable information storage medium of claim 56, wherein the predetermined time is 1 hour, and the predetermined voltage is 11 volts.

58. The computer-readable information storage medium of claim 52 further comprising code for causing the computer to perform the steps of:

indicating the bad battery fault if no voltage is detected at the second ends of the cables; and

proceeding with a charging operation if a voltage is detected at the second ends of the cables.

59. The computer-readable information storage medium of claim 52 further comprising code for causing the computer to perform the step of detecting the open cell battery fault if the charge current is less than a predetermined current, the depleted battery has been charging more a predetermined amount of time, and the voltage of the depleted battery is greater than or equal to a predetermined voltage.

60. The computer-readable information storage medium of claim further comprising code for causing the computer to perform steps of:

checking for a rapid rise in voltage after the vehicle has been started;

indicating the alternator is working properly if the rapid rise in voltage is present; and

indicating the alternator is not working properly if the rapid rise in voltage is not present.

* * * * *

DELTRAN EX1010
IPR2024-01219