Trials@uspto.gov
571-272-7822

Paper 25
Entered: August 26, 2025

UNITED STATES PATENT AND TRADEMARK OFFICE

---

BEFORE THE PATENT TRIAL AND APPEAL BOARD

---

ADC SOLUTIONS AUTO LLC,
Petitioner,

v.

THE NOCO COMPANY,
Patent Owner.

---

IPR2024-00577
Patent 11,447,023 B2

---

Before DAVID C. MCKONE, AVELYN M. ROSS, and
JASON M. REPKO, *Administrative Patent Judges.*

ROSS, *Administrative Patent Judge*.

JUDGMENT
Final Written Decision
Determining All Challenged Claims Unpatentable
*35 U.S.C. § 318(a)*



DELTRAN EX1069
IPR2024-01219

# I. INTRODUCTION

ADC Solutions Auto LLC ("Petitioner") filed a corrected Petition (Paper 6, "Pet.")[1] requesting an *inter partes* review of claims 1, 32, 38, 39, 47, 52, and 54 (Pet. 8) of U.S. Patent No. 11,447,023 B2 (Ex. 1001, "the '023 patent"). The NOCO Company ("Patent Owner") filed a Preliminary Response to the Petition. Paper 7 ("Prelim. Resp.").

Upon consideration of the Petition, Preliminary Response, and the parties' evidence, we determined that Petitioner had demonstrated a reasonable likelihood that it would prevail with respect to at least one claim of the '023 patent. Paper 8 ("Decision on Institution" or "DI"). Thus, pursuant to the Supreme Court's decision in *SAS Institute Inc. v. Iancu*, 584 U.S. 357, 364 (2018), and the USPTO Guidance,[2] we instituted review of all challenged claims on all challenged grounds. *Id.*

Following institution of trial, Patent Owner filed a Patent Owner Response (Paper 12, "PO Resp."), Petitioner filed a Reply (Paper 15, "Pet. Reply"), and Patent Owner filed a Sur-reply (Paper 18, "Sur-reply"). In support of their respective positions, Petitioner relies on the testimony of

---

[1] Petitioner filed a "[c]orrected" Petition (Paper 6) to address a duplication of exhibits (namely, Exs. 1024–1025). The duplication was resolved by addressing the exhibits and does not cause any inconsistency between the original petition (i.e., Paper 1) and present record (e.g., does not cause incorrect citations). This Decision thus addresses the Corrected Petition (i.e., Paper 6).

[2] In accordance with our rules, "[w]hen instituting inter partes review, the Board will authorize the review to proceed on all of the challenged claims and on all grounds of unpatentability asserted for each claim." 37 C.F.R. § 42.108(a).

Dr. C. Arthur MacCarley (Ex. 1003 and 1044) and Patent Owner relies on the testimony of Dr. Ayma Fayed (Ex. 2011).

We held an oral hearing on May 29, 2025, and a transcript of the hearing is included in the record (Paper 24, "Tr.").

We have jurisdiction under 35 U.S.C. § 6. This Final Written Decision is issued pursuant to 35 U.S.C. § 318(a) and 37 C.F.R. § 42.73.

For the reasons discussed below, we determine that Petitioner has shown by a preponderance of the evidence that 1, 32, 38, 39, 47, 52, and 54 of the '023 patent are unpatentable.

*A. Real Parties-in-Interest*

Petitioner identifies "ADC Solutions Auto LLC" as the sole real party-in-interest. Pet. 1.

Patent Owner identifies "The Noco Company" as the real party -in -interest. Paper 3 (Mandatory Notice), 2.

*B. Related Proceedings*

Petitioner identifies the following actions as related proceedings:

> U.S. Patent No. 11,447,023 ("the '023 patent") is presently asserted in the litigation proceedings bulleted below.
>
> - Actions in which Petitioner is a party:
>  - *The NOCO Company v. Winplus North America Inc. et al.*, Case No. 8:23-cv-00269 (C.D. Cal.); and
>  - *Certain Portable Battery Jump Starters and Components Thereof (II)*, Inv. No. 337-TA-1359 (U.S. International Trade Commission) ("ITC Action").
> - Actions in which Petitioner is not a party:
>  - *The NOCO Company v. Shenzhen Carku Technology Co., Ltd.*, Case No. 1:23-cv-00911 (N.D. Ill.);

- *The NOCO Company v. Hulkman LLC et al.*, Case No. 3:23-cv-00642 (N.D. Cal.);
- *The NOCO Company v. Youxiangongsi*, Case No. 4:23-cv-00554 (S.D. Tex.); and
- *The NOCO Company v. Deltona Transformer Corporation et al.*, Case No. 6:23-cv-02194 (M.D. Fla.).

Pet. 2–3.

Petitioner also states that the ’023 patent “stems from a line of continuation applications claiming priority back to . . . U.S. Patent No. 9,007,015 (EX1013)” and that “[a]ll claims of the ’015 patent were challenged in *inter partes* review, IPR2020-00944, which resulted in a Final Written Decision (‘the ’015-FWD’) finding all claims, except claim 11, unpatentable.” Pet. 12 (citing Ex. 1001, code (60); Ex. 1003 ¶¶ 28–29; Ex. 1014). The ’015-FWD was affirmed by the Federal Circuit under Federal Circuit Rule 36. *Id.* (citing Ex. 1015).

Patent Owner likewise identifies each and only the above actions as related proceedings. Paper 3 (Mandatory Notice).

*C. The ’023 patent (Ex. 1001)*

The ’023 patent, titled “Portable Vehicle Battery Jump Start Apparatus with Safety Protection and Jumper Cable Device Thereof,” issued on September 20, 2022. Ex. 1001, codes (45), (54). The “invention relates generally to apparatus for jump-starting a vehicle having a depleted or discharged battery.” *Id.* at 1:8–10.

The ’023 patent discloses a “handheld battery booster according to one aspect of the invention.” *Id.* at 4:1–5. “At the heart of the handheld battery booster is a lithium polymer battery pack 32, which stores sufficient energy to jump start a vehicle engine served by a conventional 12 volt

lead-acid or valve regulated lead-acid battery." *Id.* at 4:5–9. Figure 3, reproduced below, depicts an exemplary handheld battery booster device. *Id.* at 7:38–39.

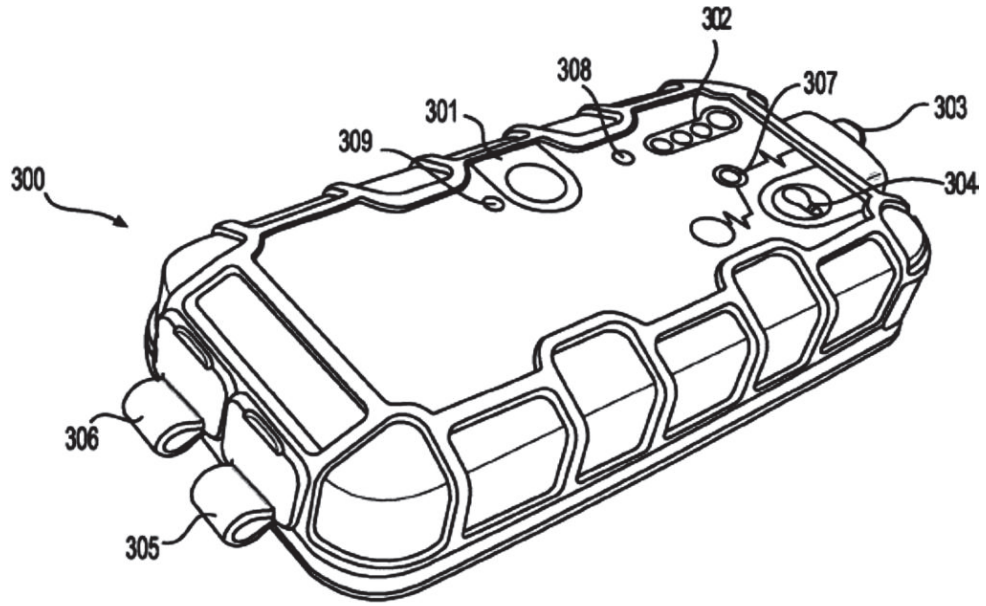


**FIG. 3**

Figure 3 "is a perspective view of a handheld jump starter booster device in accordance with one embodiment of the invention." *Id.* at 3:63–65. Figure 3 illustrates the following: power on switch 301; LED "fuel gauge" indicators 302; a 12 volt output port 303 connectable to the cable device 400; flashlight control switch 304 for activating flashlight LEDs; USB input port 305 for charging the internal lithium battery; USB output port 306 for providing charge from the lithium battery to other portable devices such smartphones; a "boost on" indicator 307 showing that power is being provided to the 12 volt output port 303; a "reverse" indicator 308 showing that the vehicle battery is improperly connected with respect to polarity; a

"power on" indicator 309 showing that the device 300 is powered up for operation. *Id.* at 7:40–52.

Figure 4, reproduced below, depicts jumper cables useful for the handheld jump starter shown in Figure 3. *Id.* at 7:53–54.

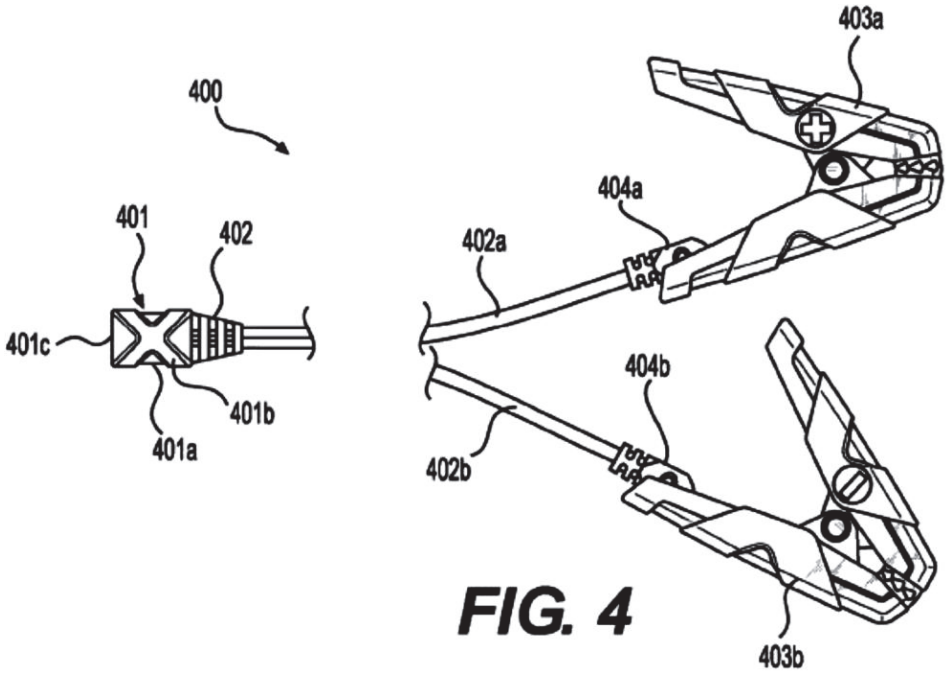


FIG. 4

Figure 4 "is a plan view of a jumper cable." *Id.* at 3:65–67. Figure 4 illustrates the following: plug 401 configured to plug into 12 volt output port 303 of handheld device 300; a pair of cables 402a, 402b integrated with plug 401 (having body 401a, surface protrusion 401b, and flat end 401c) and respectively connected to positive and negative polarity battery terminal clamps 403a, 403b via ring terminals 404a, 404b. *Id.* at 7:55–60. Handheld booster device 300 is connected to a vehicle battery by connecting the plug 401 into the output port 303 and connecting the battery clamps 403a, 403b to respective terminals of the battery. *Id.* at 8:2–11.

Figure 1, reproduced below, illustrates an exemplary embodiment.

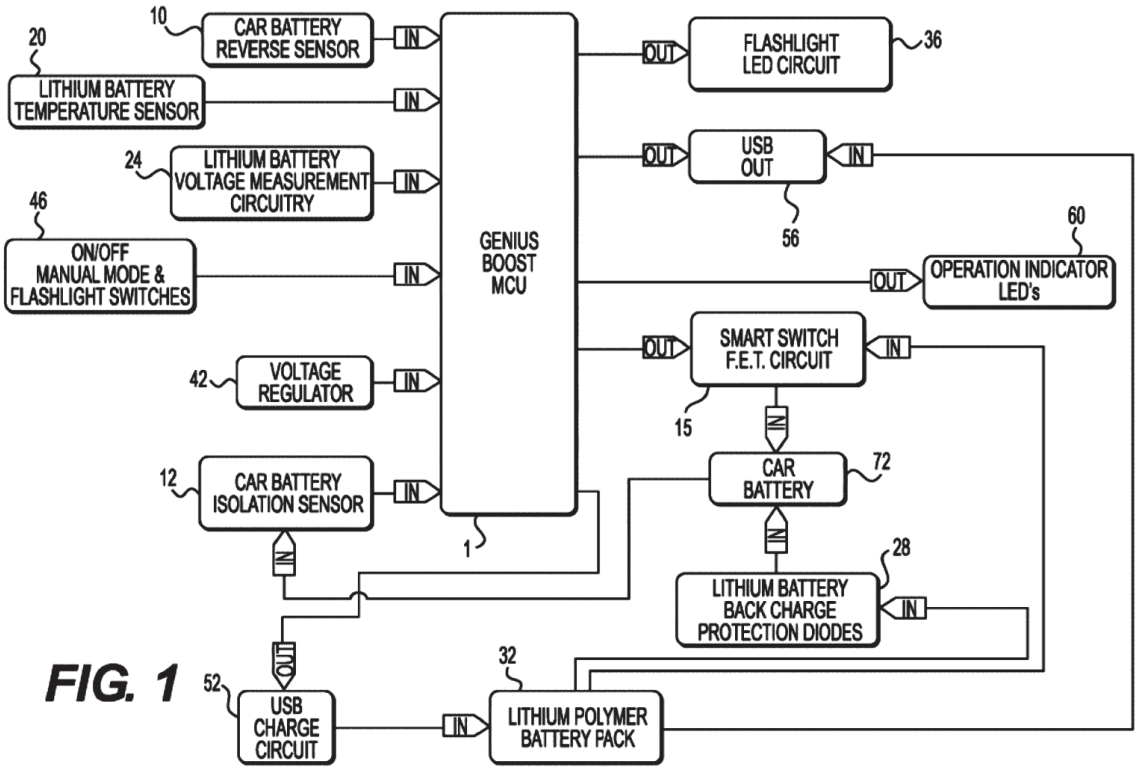


FIG. 1

Figure 1 "is a functional block diagram of a handheld battery booster according to one aspect of the invention." *Id.* at 4:4–5. A programmable microcontroller unit MCU 1 receives inputs and produces outputs to read and control the remaining elements. *Id.* at 4:17–19. Car battery reverse sensor 10 detects, and informs MCU 1, whether the negative and positive terminals of booster device 300 are respectively and thus correctly connected to negative and positive terminals of the vehicle battery 72. *Id.* at 4:27–33, 8:2–11.

USB charge circuit 52 converts power from "any USB charger power source, charge voltage and current" to the power that charges lithium battery pack 32. *Id.* at 5:15–17. In a specific example of Figure 2C, USB charge circuit 52 converts power of "a standard USB charger" to the charging power. *Id.* at 7:21–23. The input of charge circuit 52 is a "standard micro-USB connector 48 allowing standard cables to be used." *Id.* at 7:23–

25. "The 5V potential provided from standard USB chargers is up-converted to the 12.4 VDC voltage required for charging the internal lithium battery pack using a DC-DC converter 49." *Id.* at 7:25–28.

*D. Illustrative Claim*

Petitioner challenges claims 1, 32, 38, 39, 47, 52, and 54 of the '023 patent. Independent claim 1 is representative of the challenged claims and is reproduced below with Petitioner's annotations:[3]

> [Preamble] A jump starting apparatus configured for boosting or charging a depleted or discharged battery having a positive polarity battery terminal and a negative polarity battery terminal, the jump starting apparatus comprising:
>
> [1(a)] a power supply;
>
> [1(b)] a positive polarity battery terminal connector configured for connecting the jump starting apparatus to the positive polarity battery terminal of the depleted or discharged battery;
>
> [1(c)] a negative polarity battery terminal connector configured for connecting the jump starting apparatus to the negative polarity battery terminal of the depleted or discharged battery;
>
> [1(d)] a power switch or circuit configured to turn on power from the power supply to the positive and negative polarity battery terminal connectors;
>
> [1(e)] a control system or circuit connected to and controlling the power switch, the control system or circuit configured to detect whether the positive and negative polarity battery terminal connectors have a correct polarity connection with the positive and negative polarity battery terminals of the depleted or discharged battery prior to turning on the power switch or circuit;

[3] For convenience, we adopt Petitioner's annotated claim format.

> [1(f)] a USB input circuit connected to the power supply, the USB input circuit configured for converting power from a USB power source to increase power voltage to the power supply; and
>
> [1(g)] a USB input connector connected to the USB input circuit, the USB input connector configured for connecting to the USB power source and providing power input from the USB power source through the USB input connector and the USB input circuit to the power supply.

Ex. 1001, 8:40–9:6.

*E. The Asserted Unpatentability Challenges*

Petitioner asserts that claims 1, 32, 38, 39, 47, 52, and 54 would have been unpatentable based on the following grounds:

| Claim(s) Challenged | 35 U.S.C. §[4] | Reference(s)/Basis |
|---|---|---|
| 1, 32, 38, 39, 47, 52, 54 | 103 | Richardson,[5] Zhao[6] |
| 1, 32, 38, 39, 47, 52, 54 | 103 | Yu,[7] Paparrizos[8] |

Pet. 8. Petitioner also relies on declaration testimony of C. Arthur MacCarley to support its contentions. Ex. 1003 (the "MacCarley Declaration").

---

[4] The Leahy-Smith America Invents Act ("AIA"), Pub. L. No. 112-29, 125 Stat. 284 (2011), amended 35 U.S.C. § 103, effective March 16, 2013. Because the application from which the '023 patent issued was filed after this date, the AIA version of § 103 applies.

[5] US 2013/0154543 A1, published June 20, 2013 (Ex. 1005, "Richardson").

[6] US 9391467 B2, issued July 12, 2016 (Ex. 1006, "Zhao").

[7] CN 203211234U, September 25, 2013 (Ex. 1008 (certified English translation), "Yu").

[8] US 9219372 B2, December 22, 2015 (Ex. 1009, "Paparrizos").

## II. ANALYSIS

### *A. Principles of Law*

In an *inter partes* review, "the petitioner has the burden from the onset to show with particularity why the patent it challenges is unpatentable." *Harmonic Inc. v. Avid Tech., Inc.*, 815 F.3d 1356, 1363 (Fed. Cir. 2016) (citing 35 U.S.C. § 312(a)(3) (2012) (requiring *inter partes* review petitions to identify "with particularity . . . the evidence that supports the grounds for the challenge to each claim")). This burden of persuasion never shifts to the patent owner. *See Dynamic Drinkware, LLC v. Nat'l Graphics, Inc.*, 800 F.3d 1375, 1378 (Fed. Cir. 2015) (discussing the burden of proof in *inter partes* review).

Obviousness is a question of law based on underlying determinations of fact. *Graham v. John Deere Co.*, 383 U.S. 1, 17 (1966); *Richardson-Vicks, Inc. v. Upjohn Co.*, 122 F.3d 1476, 1479 (Fed. Cir. 1997). A claim is unpatentable as obvious, under 35 U.S.C. § 103, if the differences between the claimed invention and the prior art are such that the claimed invention, as a whole, would have been obvious before the effective filing date of the claimed invention to a person having ordinary skill in the art. *KSR Int'l Co. v. Teleflex Inc.*, 550 U.S. 398, 406 (2007). The question of obviousness is resolved on the basis of underlying factual determinations including (1) the scope and content of the prior art; (2) any differences between the claimed subject matter and the prior art; (3) the level of ordinary skill in the art; and (4) objective evidence of nonobviousness.[9] *Graham*, 383 U.S. at

[9] Patent Owner does not provide objective evidence of nonobviousness. *See generally* PO Resp.

17–18. Consideration of the *Graham* factors "helps inform the ultimate obviousness determination." *Apple Inc. v. Samsung Elecs. Co.*, 839 F.3d 1034, 1048 (Fed. Cir. 2016) (en banc), *cert. denied*, 583 U.S. 963 (2017). "Obviousness does not require absolute predictability of success[;] . . . all that is required is a reasonable expectation of success." *In re O'Farrell*, 853 F.2d 894, 903–04 (Fed. Cir. 1988) (citations omitted). But, a petitioner cannot satisfy its burden of proving obviousness by employing "mere conclusory statements." *In re Magnum Oil Tools Int'l, Ltd.*, 829 F.3d 1364, 1380 (Fed. Cir. 2016).

We analyze the challenges presented in the Petition in accordance with the above-stated principles.

*B. Level of Ordinary Skill in the Art*

We review the grounds of unpatentability in view of the understanding of a person having ordinary skill in the art ("PHOSITA") before the effective filing date of the claimed invention. *Graham*, 383 U.S. at 17.

Petitioner contends that a person of ordinary skill in the art,

> as of the claimed priority date of July 3, 2014, would have been a person with at least a bachelor's degree in electrical engineering or its equivalent and at least two years of experience in the field of electrical engineering including some experience with DC power supply or battery charger design[;] . . . [l]ess work experience could be compensated for by a higher level of education, such as a master's degree, and vice versa.

Pet. 22 (citing Ex. 1003 ¶¶ 39–42; Ex. 1014, 10–11). Patent Owner "does not propose a different level of skill in the art." PO Resp. 19.

In light of the record before us, and for purposes of this Decision, we adopt Petitioner's proposal regarding the level of ordinary skill in the art. Based on our review of the '023 patent and the prior art of record, we determine that the definition offered by Petitioner comports with the qualifications a person would have needed to understand the '023 patent and the prior art.

*C. Claim Construction*

We construe claim terms according to the standard set forth in *Phillips v. AWH Corp.*, 415 F.3d 1303, 1312–17 (Fed. Cir. 2005) (en banc). 37 C.F.R. § 42.100(b). Under *Phillips*, we give claim terms "their ordinary and customary meaning." *Phillips*, 415 F.3d at 1312. "[T]he ordinary and customary meaning of a claim term is the meaning that the term would have to a person of ordinary skill in the art in question at the time of the invention." *Id.* at 1313. "Importantly, the person of ordinary skill in the art is deemed to read the claim term not only in the context of the particular claim in which the disputed term appears, but in the context of the entire patent, including the specification." *Id.*

"Petitioner submits there are no formal claim constructions necessary in this proceeding." Pet. 23. Patent Owner "does not propose any terms need to be construed." PO Resp. 18.

As neither party proposes an express construction for our consideration and because we determine that claim construction is not necessary to decide whether to institute, we do not expressly construe any claim terms. *See Vivid Techs., Inc. v. Am. Sci. & Eng'g, Inc.*, 200 F.3d 795, 803 (Fed. Cir. 1999) (holding that "only those terms need be construed that are in controversy, and only to the extent necessary to resolve the

controversy"); *see also Nidec Motor Corp. v. Zhongshan Broad Ocean Motor Co.*, 868 F.3d 1013, 1017 (Fed. Cir. 2017) (citing *Vivid Techs.* in the context of an *inter partes* review).

*D. Challenge Based on Richardson and Zhao (Ground 1)*

Petitioner alleges that claims 1, 32, 38, 39, 47, 52, and 54 of the '023 patent are rendered obvious by Richardson and Zhao. Pet. 30.

*1. Overview of the Prior Art*

*a) Richardson (Ex. 1005)*

Richardson is titled "method and apparatus for providing supplemental power to an engine." Ex. 1005, code (54). Richardson "relates to a portable power source for a motor vehicle and, more particularly, to a method and apparatus to provide supplemental power to start internal combustion and turbine engines." *Id.* ¶ 2. Richardson explains that if "the batteries [of a motor vehicle] are cross-connected or the clamps inadvertently contact each other when one end of the jumper cables is connected to a battery, sparking can occur resulting in . . . a potential for the batteries exploding and fire." *Id.* ¶ 5.

Richardson states that

> The present invention monitors the voltage of the battery of the vehicle to be jump started and the current delivered by the jump starter . . . to determine if a proper connection has been established and to provide fault monitoring. For safety purposes, only if the proper polarity is detected can the system operate. . . . The system includes one or more internal batteries and capacitors to provide the power to the battery of the vehicle to be jump started. Once the vehicle is started, the vehicle's electrical system may recharge the batteries and capacitors before the unit automatically electrically disconnects from the vehicle's battery.

*Id.* ¶ 7.

An example jump starter 10 (illustrated by a schematic of Figure 1 and by circuit diagrams of Figures 2A–D) includes microprocessor 12, sensors, LED indicators, capacitors 21 and batteries 22 that collectively supply charging power for charging a vehicle battery, two in-series shunt cables 36, 37 that carry the charging power to the vehicle battery, and contact relay 34 that selectively gates the charging power to the vehicle battery (relaying between the shunt cables 36, 37). *Id.* ¶¶ 12, 14, 16, Fig. 1. When jump starter 10 is powered on, microprocessor 12 initializes the hardware, reads all system parameters and variables, and initializes an interrupt service routine. *Id.* ¶ 22. As part of the routine, a voltage is measured to determine whether cables 36, 37 have been reverse connected to the vehicle. *Id.* ¶ 27. If so, then microprocessor 12 prevents jump starting until the reverse polarity condition is corrected. *Id.* Similarly, another voltage is measured to determine whether jump starter batteries 22 are not sufficiently charged. *Id.* ¶ 28. Microprocessor 12 prevents jump starting until jump starter batteries 22 are sufficiently charged. *Id.* ¶¶ 28–29.

When the jump starter has been successfully initiated, contact relay 34 is closed and jump starter capacitors 21 and batteries 22 connect to the vehicle battery. *Id.* ¶ 21. Contact relay 34 is opened if the start cycle has successfully completed, a start fault occurs, or the operator interrupts the start cycle. *Id.*

Jump starter 10 may be selectively configured for 12, 18, 24, 30, 36, 42, or 48 volts. *Id.* ¶ 34. For example, if batteries 23 are both 12-volt batteries, the system may be configured for 12-volt or 24-volt operation. *Id.*

*b) Zhao (Ex. 1006)*

Zhao is titled "step-up battery charging management system and control method thereof." Ex. 1006, code (54). Zhao states that

> Battery charging systems typically utilize . . . an input supplied by a power supply adapter[] and an output coupled to a single-cell battery[] or multi-cell batteries. A universal serial bus (USB) power supply system usually has a rating power supply voltage of 5V. A single-cell lithium battery can employ . . . step-down topology to charge the single-cell battery. Step-up topology can be used in battery management systems with series connected multi-cell lithium batteries. However, in some circumstances, such as high input current or short-circuit at the output, if relatively large current is used directly for charging, the electronic device and/or its battery can be damaged.

*Id.* at 1:19–30. Figure 1, reproduced below, is an exemplary charger.

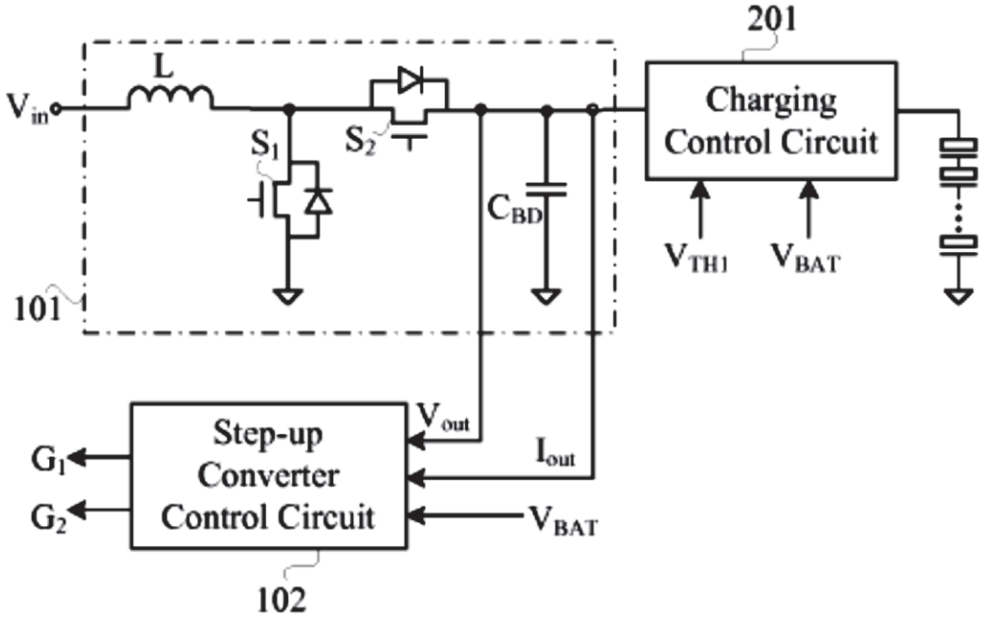


Figure 1 "is a schematic block diagram of a first example step-up battery charger in accordance with embodiments of the present invention." *Id.* at 1:59–61. Step-up battery charger 100 principally includes step-up converter control circuit 102, charging control circuit 201, and power stage circuit 101. *Id.* at 2:63–3:39. Step-up converter portion 101, 102 of charger 100 receives

and boosts a DC input voltage $V_{in}$ to generate and output a boosted output signal to charging control circuit 201 for charging of in-series lithium batteries. *Id.* at 3:1–7. DC input voltage $V_{in}$ is provided by a "universal serial bus (USB) charger[] or any other suitable low voltage power supply system." *Id.* at 3:8–11.

*2. Analysis of Claim 1*

Petitioner argues that the combination of Richardson and Zhao renders claim 1 obvious. Pet. 30. Petitioner alleges that Richardson discloses a jump starting apparatus with a power supply, i.e., Richardson's batteries 22. *Id.* at 32–34 (citing Ex. 1005, Abstr., ¶¶ 2, 4, 6–7, 14, 16, 21, 35, Figs. 1, 2A, 2C, 3–8; Ex. 1003 ¶¶ 68, 70). Petitioner contends that Richardson's positive (red clamp) terminal connector and negative (black clamp) terminal connector (together jumper cables 60) teach a positive polarity and negative polarity battery terminal configured for connecting the jump starting apparatus to the positive/negative polarity battery terminal, as claimed. *Id.* at 34–37 (Ex. 1005, Abstr., claim 26, ¶¶ 16, 27–28, Fig. 2C; Ex. 1003 ¶¶ 72–73). Petitioner contends that limitation 1(d) is taught by Richardson's contact relay 34. *Id.* at 37–39 (citing Ex. 1005 ¶¶ 21, 35–36, 54, claim 26, Figs. 1, 6 (step 268); Ex. 1003 ¶¶ 76–77). Petitioner further asserts that the control system or circuit of limitation 1(e) is taught by Richardson's microcontroller 12 and reverse voltage sensor 24. *Id.* at 39–42 (citing Ex. 1005, Abstr., ¶¶ 14, 16, 18, 20, 27, 36, claim 26, Figs. 1, 2A–C; Ex. 1003 ¶¶ 79–81). Petitioner also notes that "Patent Owner admitted 'Richardson discloses detecting proper polarity' during prosecution." *Id.* at 42 (Ex. 1002, 496; Ex. 1003 ¶ 82).

With respect to limitation 1(f), Petitioner argues that although "Richardson teaches its system includes various features related to charging the jump starter batteries, such as circuitry for detecting a charger voltage and monitoring battery voltage to determine when the charging process is complete," "Richardson does not teach the jump starter's charging circuitry utilizes USB technology." Pet. 42–43 (citing Ex. 1005 ¶¶ 20, 28–29; Ex. 1003 ¶ 84). But, Petitioner contends that

> Zhao teaches USB input circuits configured for converting power from a USB power source (such as one providing a 5V input) to increase power voltage to the power supply were well-known for portable battery-powered devices that require charging a multicell battery pack with a voltage rating above the voltage received from the power source.

*Id.* at 43 (citing Ex. 1006, Abstr., 1:22–23, 1:25–27, 3:6–11; Ex. 1003 ¶ 85). Petitioner further alleges that Zhao teaches a technique to boost an input voltage, such as a 5V USB power source, to a higher output voltage. *Id.* at 43–44 (citing Ex. 1006, Abstr., 1:22–23, 1:25–27, 1:34–45, 1:46–66, 2:51–62, 2:63–3:11; Ex. 1003 ¶¶ 85–86).

Petitioner alleges that a person of ordinary skill in the art

> would have been motivated to modify the design of Richardson's jump starter to either (1) replace the existing charging circuitry with Zhao's step-up charging system and connect the output to Richardson's jump starter batteries, or (2) add Zhao's step-up charging system and connect the output to Richardson's jump starter batteries as an additional and alternatively pathway for charging the jump starter batteries. EX1003, ¶ 88.

*Id.* at 45. According to Petitioner, either option identified would have been beneficial:

> For example, although option 1 may result in longer charging times, it allows the supplier to avoid the need to supply a

> proprietary charger or other type of AC "power brick" that would be less ubiquitous or less standardized than a USB charger. *Id.* On the other hand, while option 2 would result in a slight increase in cost for including an additional input connector and DC-DC conversion circuitry in Richardson's jump starter, the desirable benefits would include increased flexibility so that the jump starter batteries could be charged via a traditional AC power brick when available, but alternatively by a USB charger if the AC power brick is lost, damaged, or the user is otherwise in a location where only USB power is readily available.

*Id.* at 45.

Petitioner further alleges that "the desirability of utilizing USB technology to charge battery-powered devices was well-known before the priority date." Pet. 46–49 (citing Ex. 1001, 7:21–25; Ex. 1025, 6; Ex. 1024 ¶¶ 1–4, 8; Ex. 1016 ¶¶ 2, 11; Ex. 1003 ¶¶ 89–91; Ex. 1029; Ex. 1030; Ex. 1009, 1:18–23; Ex. 1027, 26–28; Ex. 1026, 28:14–31:13; 32:22–38:24; 42:23–43:22; 44:2–19; 51:14–54:13, 54:25–56:14; Ex. 1026, 53:2–18; Ex. 1018; Ex. 1019, Abstr., ¶¶ 4–5, Fig. 1, Fig. 2; Ex. 1020; Ex. 1021, 4; Ex. 1017, 2:48–59; Ex. 1022; Ex. 1023, Abstr., claim 1, ¶¶ 3–9, 13, 16–17, Fig. 1). Petitioner identifies the "desired benefits of USB technology" as including, inter alia, "(1) reducing the need for suppliers to ship product with proprietary chargers (thus reducing cost of goods and avoiding electronic waste), (2) providing device users with the desired result of reducing their need to possess or carry multiple proprietary chargers and cables for their battery-powered devices (*e.g.* the goal of universal compatibility), (3) ease of use, and (4) durability." *Id.* at 46 (citing Ex. 1016 ¶ 2; Ex. 1003 ¶ 89).

As to use of a USB input connector, i.e., limitation (g), Petitioner asserts that although "Richardson is not explicit regarding the type of input connector utilized for charging the jump start batteries," "a [person of

ordinary skill in the art] would have been familiar with the relevant USB standards and been motivated to implement USB technology when designing a portable battery-powered device," e.g., "implementation of commercially-available USB receptacles (such as a micro-USB receptacle) when designing a USB charging feature." Pet. 50. According to Petitioner, a person of ordinary skill in the art

> would have known Zhao's system implements a design requiring the remaining portions of a USB charging system, especially a USB-compliant receptacle (such as a micro-USB connector). A [person of ordinary skill in the art's] knowledge of these USB input connectors—which the '023 patent admits are "standard" (*see* EX1001, 7:23–25)—is further corroborated by the USB standards and other prior art discussing these standard connectors. *See*, *e.g.*, EX1009, 1:20–23 (discussing USB, mini-USB, and micro-USB connectors); EX1018; EX1019, ¶ [0004] (discussing "Mini-USB interface").

*Id.* at 50–51 (also citing Ex. 1003 ¶¶ 94–95).

Patent Owner does not challenge many of Petitioner's allegations regarding the teachings of Richardson[10] and Zhao. *See generally* PO Resp. We have reviewed Petitioner's arguments and evidence and agree—based on the information provided in the Petition—that the preponderance of the evidence supports Petitioner's contention that the combination of Richardson and Zhao teaches each limitation of claim 1 of the '023 patent. Patent Owner does assert, however, that the skilled artisan would not have had reason to combine the teachings of Richardson and Zhao as Petitioner suggests. *Id.* at 25–38. Specifically, Patent Owner contents that Petitioner

[10] Petitioner notes "[t]he Board made similar factual findings regarding Richardson in the '015-FWD, which was affirmed on appeal." Pet. 32–42 (citing Ex. 1014 at 50–67; Ex. 1015 at 2; Ex. 1003 ¶¶ 69–83).

has failed to show a reason to combine because (1) Richardson's device would not function properly with Zhao's USB charging port (*id.* at 25–31); (2) no explanation is provided about how to incorporate Zhao's USB charging port into Richardson's system (*id.* at 32–34); and (3) no evidence suggests that Zhao's step-up converter could charge Richardson's device (*id.* at 37–38). We address Patent Owner's argument below.

*a) Whether Petitioner Has Shown a Reason to Include a USB Charging Port in Richardson*

Patent Owner argues that the reasons to combine the teachings of Richardson and Zhao, provided by Petitioner, are insufficient to support the combination. PO Resp. 25–31. Specifically, Patent Owner contends that Richardson's jump starter is used to charge a fleet of vehicles, having high capacity batteries, over a short period of time and a person of ordinary skill in the art would not have had reason to use Zhao's USB system to charge a high-voltage, large capacity battery system because Zhao does not teach using its USB system at voltages above 8.4V or to charge large capacity batteries. *Id.* According to Patent Owner, "charging such a large-capacity battery with USB was counterintuitive, not because boost converting an input voltage was not understood in the art, but instead because it was well understood that the limited charging current that traditional USB provided was not capable of quickly charging high-capacity battery systems." *Id.* at 27. Patent Owner alleges that charging a 48V battery pack, like that contemplated by Richardson, "would require four times the number of series-connected battery cells of a typical 12V vehicle charger, assuming peak current is maintained" and that "[c]harging Richardson's system would therefore take four times longer than a jump starter designed to jump start

only 12 volt vehicle batteries." *Id.* at 29; *see also id.* at 30 (arguing that "it would have been nonsensical to charge Richardson's massive internal battery with USB, as it would have drastically increased the charging time of the device"). Thus, Patent Owner concludes that "[g]iven the focus of Richardson on rapid recharging, the Petition fails to demonstrate that a PHOSITA would have modified Richardson's jump starter to include a traditional USB charger which, again, had much lower power capabilities than other charging options available at the time." *Id.* at 31.

Petitioner argues in reply that:

> First, the '023 patent does not claim or otherwise teach improvements to the rate at which a USB power source charges a battery, "high capacity" or not. Second, Richardson's jump starter is not limited to "rapid recharging" of "high capacity" batteries, but instead broadly discloses "a portable power source for a motor vehicle", including several nonlimiting "examples" of various battery configurations and voltages that may be utilized in its system. Third, even if Richardson were limited to "high capacity" batteries capable of outputting up to 48V, the Petition nevertheless explains, with supporting evidence, why a PHOSITA would have been motivated to utilize USB for its known benefits notwithstanding potentially longer charging times than other power inputs.

Pet. Reply 7–8. Petitioner also asserts that Patent Owner misrepresents the teachings of both Richardson and Zhao. *Id.* at 10–12, 13–15.

We agree with Petitioner that the skilled artisan would have had reason to combine the teachings of Richardson and Zhao to achieve the subject matter of claim 1. For example, Petitioner contends that a person of ordinary skill in the art would have modified Richardson's system to include the USB input circuit of Zhao to avoid the need to supply a proprietary charger or other type of AC 'power brick' that would be less ubiquitous or

less standardized," increase flexibility and convenience, and cater to consumer demand for USB technology. Pet 45–46 (citing Ex. 1003 ¶¶ 88–89). Petitioner further alleges that the addition of a USB input circuit would provide for an alternative where traditional charging methods are lost, damaged. or otherwise unavailable. *Id.* at 45 (citing Ex. 1003 ¶ 88). Thus, Petitioner has provided sufficient reasoning with rational underpinnings to explain why a person of ordinary skill in the art would have modified the teachings of the applied references. *See KSR*, 550 U.S. at 418.

We acknowledge, but are not convinced by, Patent Owner's arguments that the nature of Richardson requires the ability to charge a high capacity battery and rapid recharging and therefore would not have led a person of ordinary skill in the art to include Zhao's USB charging circuit in Richardson. *See* PO Resp. 25–31. In particular, we are not persuaded that Richardson is limited to high capacity, rapid recharging of batteries as Patent Owner suggests. Instead, Richardson broadly describes "an apparatus and method for temporarily delivering supplemental power to the electrical system of a vehicle" (Ex. 1005 ¶ 6) where "[t]he jump starter 10 may be configured for 12, 18, 24, 30, 36, 42 or 48 volts" (*id.* ¶ 34). According to Richardson, this may be achieved by using "two or more batteries of the same or different voltage levels . . . to achieve the voltage requirements of the vehicle to be started." *Id.* By way of example, Richardson states that "if the batteries 23 are both 12-volt batteries, the system may be configured for 12- or 24-volt operation" and "[i]f the batteries 23 are 12-volt batteries and a battery 25 is a 6-volt battery, 18- or 30-volt configurations may be provided." *Id.* Neither Richardson's claims nor its specification require any particular charging capacity or charging time. *See generally* Ex. 1005.

While a single, near-final paragraph of Richardson introduces the concept of rapid charging of the jump starter batteries to charge a fleet of vehicles, Richardson characterization is permissive or optional. For example, Richardson states

> The charging system of the vehicle ***may be used to charge*** the capacitors 21 and jump starter batteries 22. . . . This allows the capacitors 21 and jump starter batteries 22 to be fully recharged in about 1 to 5 minutes and ***can therefore start many vehicles*** in a row without becoming discharged.

*Id.* ¶ 55 (emphasis added). We do not view this singular occurrence as supplanting the breadth of Richardson's complete disclosure.

Furthermore, the crux of Patent Owner's argument is that because of Richardson's goal of charging high capacity batteries a USB charger would require significant charging time. PO Resp. 29; Sur-reply 2–14 But, nowhere does Patent Owner allege that a USB charger would not work given sufficient time.[11] *See generally* PO Resp. and Sur-reply. And, when faced with no alternative, the person of ordinary skill in the art must balance the trade-offs and consider charging slowly, or not at all. *Medichem, S.A. v. Rolabo, S.L.*, 437 F.3d 1157, 1165 (Fed. Cir. 2006) (explaining that "a given course of action often has simultaneous advantages and disadvantages, and this does not necessarily obviate motivation to combine"); *see also Winner*

---

[11] Petitioner in its Reply presents some evidence of charging times using a USB input charger. Pet. Reply 4–7; Ex. 1044 ¶¶ 6–12, Appendix A. Patent Owner disputes the accuracy of Petitioner's calculations. Sur-reply 2–11. But, whether Petitioner's calculations are accurate or not, Petitioner's proposed alternative modification does not remove the faster charging path and instead adds the convenience and flexibility of a secondary charging method where the primary and faster charging path is unavailable. Ex. 1044 ¶ 12.

*Int' Royalty Corp. v. Wang*, 202 F.3d 1340, 1349 n.8 (explaining that while a motivating benefit may come at the expense of another benefit, the trade-off does not necessarily nullify the motivation to combine).

We are also unpersuaded by Patent Owner's argument that Petitioner misapplies its motivation to combine analysis (Sur-reply 14–17) where Petitioner argues that neither the claims nor the Specification of the '023 patent require increasing power to a particular voltage, charging a high capacity battery, or the ability to rapidly recharge the jump starter batteries (Pet. Reply 8–9). Specifically Patent Owner criticizes Petitioner for "effectively argu[ing] . . . that, an obviousness ground is acceptable even where a skilled artisan would not have actually combined the prior art's teachings, as long as the reason for not making the combination is not expressly provided in the claim language." Sur-reply 15; *see also id.* at 16 (stating that "[w]hether the claim language includes a specific charging voltage or battery capacity is inconsequential when evaluating the proposed combination"). We disagree with Patent Owner's characterization of Petitioner's argument. Instead, we understand Petitioner to argue—and we agree–that Richardson, in the absence of any discussion of charging capacity and only a scant discussion of charging time, would have indicated to the skilled artisan that neither are critical to its disclosure. But, the '023 patent is silent as to any requite charging capacities and, as Petitioner aptly notes, Patent Owner "cannot demand a greater level of detail from the prior art than is taught by the '023 patent." *Lockwood v. Am. Airlines, Inc.*, 107 F.3d 1565, 1570 (Fed. Cir. 1997).

Lastly, we are unconvinced by Patent Owner's argument that Petitioner's proposed modification that provides an "additional and

alternative pathway" poses safety risks to users who plug in multiple chargers at the same time. PO Resp. 33. Patent Owner directs our attention to the testimony of Dr. Fayed that such an additional pathway "*can be* catastrophic and pose[] a major safety risk." Ex. 2011 ¶ 99. But, Dr. Fayed further testifies that to avoid these concerns,

> such multicharger systems must employ a combination of additional power switches, diodes, current/voltage sensors, and control circuitry to ensure that plugging more than one power source at the same time is properly and immediately detected and to ensure that only one power path is activated.

*Id.* Dr. Fayed does not suggest that such modifications would have been unknown to the skilled artisan, beyond the relative skill level in the art, or that such modifications would have been cost prohibitive. Indeed, Dr. Fayed's testimony suggests that a person of ordinary skill in the art "would have known this 'safety risk' would be prevented through well-known, off-the-shelf components, such as switches, diodes, sensors, and control circuitry." Pet. Reply 18 (citing Ex. 2011 ¶ 99; Ex. 1044 ¶ 16).

Thus, we are persuaded that the skilled artisan would have had reason to combine the teachings of Richardson and Zhao to achieve the subject matter of claim 1.

*b) Whether Petitioner Has Shown How to Incorporate Zhao's USB charger Into Richardson's Device*

Patent Owner further asserts that Petitioner has failed to establish that a person of ordinary skill in the art would have either replaced Richardson's existing circuitry with Zhao's step-up charging system or to added Zhao's step-up charging system to Richardson. PO Resp. 32–37. Patent Owner first contends that "[t]here is no charging port of any kind described or

depicted in Richardson's device, nor does Petitioner point to any . . . . Therefore, Petitioner's first proposed modification of 'replacing the existing charging circuitry' of Richardson simply does not make any sense." *Id.* at 32–33; *see also id.* at 36 (same). Patent Owner further argues that in Petitioner's proposed "additional and alternative pathway," "[i]t is unclear where Petitioner is proposing that the step-up charging system be added to Richardson's circuitry" and whether Petitioner proposes "to charge each of Richardson's internal batteries simultaneously, or individually." *Id.* at 37. Though Patent Owner acknowledges that having an "additional and alternative pathway" may be "theoretically" beneficial, Patent Owner contends it would add cost, complexity, and present a safety risk to users who attempt to plug in "two chargers at the same time." *Id.* at 33. Patent Owner also asserts that the Petition "fails to address why [a person of ordinary skill in the art] would have chosen a USB port over other much-faster arrangements." *Id.* at 34.

Petitioner asserts that "Richardson teaches the jump starter 'batteries 22' may be charged using a 'battery charger'" and that Patent Owner incorrectly assumes "that the referenced 'battery charger' charges 'batteries 22' via the 'red and black shunt cable ports.'" Pet. Reply 11–12. But, according to Petitioner, "[a] PHOSITA, however, would have understood a 'battery charger', in contrast to 'vehicle charging system', broadly refers to power sources commonly used to charge jump starter batteries when a vehicle battery is not available." *Id.* at 12; *see also id.* at 11 (explaining that "[i]t was unnecessary for Richardson to describe or show the 'battery charger' because it was well within a PHOSITA's level of skill to implement a charging pathway from a typical battery charger to the batteries.").

We are persuaded Petitioner has adequately demonstrated that a person of ordinary skill in the art would have combined the teachings of Richardson and Zhao in the manner proposed. Petitioner argues that a person of ordinary skill in the art would have been motivated to pursue one of two possible modifications of Richardson. Pet. 45. For example Petitioner explains that the skilled artisan would have either "(1) replace[d] the existing charging circuitry with Zhao's step-up charging system and connect the output to Richardson's jump starter batteries, or (2) add[ed] Zhao's step-up charging system and connect the output to Richardson's jump starter batteries as an additional and alternatively pathway for charging the jump starter batteries." *Id.* (citing Ex. 1003 ¶ 88). Patent Owner's arguments that a person of ordinary skill in the art would not have combined the teachings of Richardson and Zhao because Richardson's system does not have existing input circuitry and is limited to "using . . . red and black shunt cable ports," does not convince us otherwise. PO Resp. 32, 36. While Richardson may exemplify using red and black shunt cable ports, we do not view Richardson as teaching the *only* input pathway is through use red and black shunt cable ports. For example, Richardson states that

> [i]f the voltage level of the system batteries 22 . . . is equal to a state of charge of eighty percent or more below a fully charged voltage level 222, an error flag is set and the event recorded in memory 224. The charge battery LED 54 is illuminated and the LCD 46 displays a "Charge Battery" message 225. The system stays in this condition, which prohibits any further jump starter action by the operator until a charging voltage is detected 226, which is great enough to indicate that *a battery charger (not shown) has been connected to the batteries 22*.

Ex. 1005 ¶ 28 (emphasis added). Dr. MacCarley testifies that a person of ordinary skill in the art would have known what external battery charger could have been used and where to place it in Richardson's system. Ex. 1044 ¶ 98. In particular, Dr. MacCarley explains that

> there are numerous points in the circuitry disclosed by Richardson where a charging pathway from an external battery charger (e.g. the "battery charger" that Richardson explains is "not shown", EX1005, ¶ [0028]) could be connected to charge Richardson's batteries. EX2010, 52:3–54:5. Any of these connection points would be a trivial modification of Richardson's embodiment. A PHOSITA would have understood how to implement this type of well-known configuration of an external battery charger and associated charging circuitry, which would have been as simple as wiring connections to the terminal anode and cathode of the batteries. The simplicity of this connection is why it is not surprising that Richardson describes such a pathway and leaves it "not shown" in the figures.

*Id.* We credit the testimony of Dr. MacCarley in this regard. Moreover, Dr. Fayed confirms that it was known to recharge a jump starter with a barrel charger. Ex. 2011 ¶ 23.

We are also unpersuaded by Patent Owner's contention that Petitioner's "additional and alternative pathway" poses a safety risk (discussed above) and that the existence of other charging pathways, i.e., the red and black shunts, renders an additional pathway superfluous. PO Resp. 33. If Patent Owner's contentions are accepted, and the only recharging method is via the red and black shunts, that presupposes the existence of an undepleted vehicle battery. But Petitioner proposes its "additional and alternative pathway" in the event Richardson's power source is unavailable and only USB power is available (Pet. 45) and therefore, does not render the "additional and alternative pathway" unnecessary. Pet. 45.

Accordingly, Petitioner has sufficiently shown how and why the skilled artisan would have incorporated Zhao's USB charger into Richardson's device.

*c) Whether Petitioner Has Shown Zhao's Step-Up Converter Could Charge Richardson's Device*

Lastly, Patent Owner argues that "the Petition provides no evidence demonstrating that Zhao's system could be successfully implemented into Richardson's specific jump starter system." PO Resp. 37. Patent Owner explains that "Richardson's large internal battery pack enables jump starting of vehicle batteries up to 48 volts" and "Zhao only describes boosting an input voltage up to '8.4 volts.'" *Id.* at 37–38. Thus, according to Patent Owner, there is a question about "whether Zhao's boost convert[er] could have boosted a 5V input voltage to a voltage suitable to charge a 48 volt battery." *Id.* at 38.

Petitioner argues that "Zhao is broadly directed to 'a step-up battery charging management system' and the claims and the specification are not limited to particular voltages or capacities." Pet. Reply 13. Petitioner notes that Zhao describes one embodiment at 8.4 volts but also describes "charging higher voltage packs of three (or more) series connected lithium cells." *Id.* (citing Ex. 1006, 1:25–27, 3:6–7, Fig. 1).

We disagree with Patent Owner's allegation that Petitioner has not shown that Zhao could be implemented in Richardson to supply up to 48 volts and its contention that Zhao's teachings are confined to "small battery systems." *See* PO Resp. 26, 37. We agree with Petitioner that "Zhao is broadly directed to 'a step-up battery charging management system' and the claims and specification are not limited to particular voltages or battery

capacities." Pet. Reply 13. Zhao explains that a USB power supply, with a rating of 5 volts, can output higher voltages using a step-up converter of series connected batteries. Ex. 1006, 1:19–27, 3:5–7. Zhao exemplifies a final voltage of 8.4 volts but suggests adding more serially connected batteries would increase output voltage. *Id.* at 4:38–41 (describing achieving 8.4 volts with 2 lithium batteries connected in series). Zhao's figures depict using three or more batteries in series. *Id.* at Fig. 1. Dr. Fayed, Patent Owner's declarant, confirms that Zhao could be used for voltages above 12 volts. Ex. 1045 47:10–48:9 (stating that if someone chose to use the circuit of Figure 1 and add more cells, the "figure leaves the room for doing that, yes."). Thus, as Petitioner alleges, "a PHOSITA would have been motivated to select commercially-available components with appropriate voltage ratings and switching capabilities to achieve [up to] a 48V output if the application so required." Pet. 17–18 (citing Ex. 1044 ¶ 15; Ex. 1047, 4:3–32; Ex. 2011 ¶ 108).

Therefore, we are persuaded that Petitioner has established that Zhao's step up converter could have been successfully implemented in Richardson's jump starter.

* * *

Accordingly, Petitioner has shown by a preponderance of the evidence that the subject matter of claim 1 would have been suggested by the combination of Richardson and Zhao, prior to the application leading to the '023 patent. Accordingly, we conclude that claim 1 would have been obvious over the combined disclosures of Richardson and Zhao.

*3. Remaining Claims 32, 38, 39, 47, 52, and 54*

Petitioner also alleges that the subject matter of dependent claim 32 and independent claims 38, 39, 47, 52, and 54 is also rendered obvious by the combination of Richardson and Zhao. Pet. 51–59. Patent Owner does not separately address the additional limitations of claims 32, 38, 39, 47, 52, and 54. *See generally* PO Resp. Based on our review of the Petition and accompanying evidence (see e.g., Pet. 51–59), we further determine that Petitioner has demonstrated by a preponderance of the evidence that the subject matter of claims 32, 38, 39, 47, 52, and 54 was suggested by the combination of Richardson and Zhao, prior to the application leading to the ’023 patent. Accordingly, we conclude that claims 32, 38, 39, 47, 52, and 54 would have been obvious over the combined disclosures of Richardson and Zhao.

*E. Challenge Based on Yu and Paparrizos*

Petitioner also alleges that claims 1, 32, 38, 39, 47, 52, and 54 of the ’023 patent are rendered obvious by Yu and Paparrizos. Pet. 59 (heading).

*1. Overview of the Prior Art*

*a) Yu (Ex. 1008)*

Yu is titled “automotive emergency starting device.” Ex. 1008, code (54). Yu “relates to an automotive starting device [and], specifically, an emergency automotive starting device” (*id.*, code (57)), i.e., jump starter. Yu states

> A common emergency automotive starting power supply is a lead-acid battery that replaces the original car battery. . . [T]he lead-acid battery itself is relatively heavy and large, . . . lacks a polarity detection function, [and, if] the polarity of the connected emergency starting power supply is opposite to that of the

> original automobile battery, . . . damage to the battery may occur[] and even an explosion in severe cases. Additionally, . . . [s]parks can be generated instantly when the emergency power supply is connected or disconnected.

*Id.* ¶ 2. Yu explains that

> The emergency automotive starting power supply in the present invention will not power on when the emergency starting power supply is connected to the automobile circuit with reversed polarity. In addition, the emergency automotive starting power supply in the present invention can effectively prevent the generation of electric sparks when connecting or disconnecting from the vehicle, improving safety.

*Id.* ¶ 3.

An example of the jump starter (illustrated by a schematic of Figure 1 and circuit diagrams of Figures 2–5) is described as follows:

> [The jump starter principally] consist[s] of an internal battery 1, a charging input 10 interface, a display module 5, a control module 4, a relay 2, input buttons 6 and an output terminal 3 [.] . . . [T]he main contacts of the relay 2 are connected to the internal battery 1 and the output terminal 3[. T]he control module 4 includes a microprocessor 42, which controls the opening and closing of the relay 2 through the relay switch circuit 41 to control current output from the internal battery 1 to the output terminal 3[. T]he control module 4 also includes an external battery reverse connection detection circuit 44 that provides a signal [indicating] correct or incorrect [connection of the internal battery 1 to the external battery, i.e., vehicle battery].

*Id.* ¶ 21. The jump starter also includes voltage detection circuits 43, 45 respectively for the internal battery 1 and the external battery. *Id.* ¶¶ 22–23. The jump starter has an additional input and outputs as follows: a charging input 10 (only perspective view shown; no internal schematics presented) for charging of the internal battery 1 (*id.* ¶ 28, Fig. 8); and 5V, 19V, and 12V

output terminals 8, 9, 11 for supplying power to "other electrical equipment" (*id.* ¶¶ 25, 28).

During a jump start operation, output terminal 3 is connected to the vehicle battery. *Id.* ¶ 26. Depending on whether output terminal 3 is connected to the vehicle battery with incorrect polarity or correct polarity, microprocessor 42 accordingly controls connection of internal battery 1 to the vehicle battery by keeping open relay 2 (incorrect polarity) or closing relay 2 (correct polarity). *Id.* Once output terminal 3 is correctly connected to the vehicle battery (correct polarity), microprocessor 42 closes relay 2, the vehicle is started, and microprocessor 42 then opens relay 2. *Id.*

*b) Paparrizos (Ex. 1009)*

Paparrizos is titled "buck boost charging for batteries." Ex. 1009, code (54). Paparrizos describes "a battery charging circuit having several operating modes include[ing] boost and buck mode, and forward and reverse mode." *Id.* at code. (57). Paparrizos explains that "[c]onsumers are used to . . . battery charging from a USB power source. However, since a large majority of USB devices are defined at 5V, it may not be possible to charge high voltage (>5V) [Li-ion cell stacks] using a typical[] USB power source." *Id.* at 1:9–26. The battery charger of Paparrizos, therefore,

> include[]s first and second terminals . . . [whereby] power received at the first terminal (e.g., via a power source) may be delivered to a device at the second terminal (e.g., electronics or a battery), and vice-versa. The battery charging circuit may operate in buck mode (power stepped down) or boost (power stepped up) mode, and in the forward mode (power from first terminal delivered to second terminal) or reverse mode (power from the second terminal delivered to the first terminal).

*Id.* at 1:30–39. Paparrizos explains that "the electronic device 22b may be a USB device that outputs only 5V[] but must charge an 8.4V battery" and whereby "the battery 14 may supply 8.4V to electronic device 22b which is rated to operate at . . . 5V per the USB specification." *Id.* at 3:58–4:14. Voltages higher than 8.4V are contemplated by Paparrizos. *Id.* at 2:32–40 ("The battery voltage of such batteries typically range from 6–8.4V but can provide lower or higher voltages.").

*2. Analysis of Claim 1*

Petitioner argues that the combination of Yu and Paparrizos renders claim 1 obvious. Pet. 59. Petitioner alleges that Yu discloses a jump starting apparatus and an "internal battery," i.e., a power supply. *Id.* at 61–62 (citing Ex. 1008, Abstr., claim 1, ¶¶ 1, 3–4, 9, 21, 26, Figs. 1, 8; Ex. 1003 ¶¶ 153–154). Petitioner contends that Yu's positive output terminal 3 teaches a positive polarity battery terminal connector configured for connecting the jump starting apparatus to the positive polarity battery terminal, as claimed. *Id.* at 62–63 (citing Ex. 1008, Abstr., claim 1, ¶¶ 2–4, 8, 21, 26, Fig. 8; Ex. 1001, 1:10–24, 1:31–35, Fig. 2; Ex. 1003 ¶ 155). Petitioner argues that the claimed "negative polarity battery terminal connector configured for connecting the jump starting apparatus to the negative polarity battery terminal," i.e., limitation 1(c), is taught by Yu's negative output terminal 3. *Id.* at 63 (citing Ex. 1008, Abstr., ¶¶ 2–4, 8, 21, 26; Ex. 1003 ¶ 156). Petitioner asserts that the power switch or circuit of limitation 1(d) corresponds to Yu's relay 2 that is opened and closed by a relay switch circuit to control current output from the internal battery to output terminal 3. *Id.* (citing Ex. 1008, Abstr., claim 1, ¶¶ 4, 9, 21, 26, Figs. 1–2; Ex. 1003 ¶ 157). And Petitioner contends that the control

system or circuit of limitation 1(e) is taught by Yu's external battery reverse connection detection circuit 44 informing the microprocessor whether there is a correct or incorrect polarity connection of the jump starter to the vehicle battery. *Id.* at 63–64 (citing Ex. 1008, Abstr., claims 1, 3, ¶¶ 3–4, 6, 9, 21, 23, 26–27, Figs. 1–2; Ex. 1001, 5:27–30, 5:32–36; Ex. 1003 ¶¶ 158–159).

With respect to limitation 1(f), Petitioner argues that Yu teaches a charging input interface 10 "depicted in Figure 9 as a 12V/1A barrel-style receptacle" and that Paparrizos teaches a battery charging circuit "to boost an input voltage from a USB source to a higher output to charge an internal battery of a device." Pet. 59–61, 65 (citing Ex. 1008, Abstr.; Fig. 9; Ex. 1009, 1:34–38, 2:30–40, Figs. 1B, 1C; Ex. 1003 ¶ 160). In particular, Petitioner asserts that

> [Paparizzos'] battery can constitute a series-connected configuration of cells of any suitable battery chemistry, such as lithium-ion batteries, at various voltages above 5V, such as 6–8.4V or higher. *See id.*; EX1003, ¶ 161. Paparrizos further contemplates the charging circuit is an USB input circuit whereby power is received from a USB source. EX1009, 2:56–63, FIG. 1B (depicting an electronic device 16B serving as a power source connected to USB connector 16b), FIG. 1C (depicting a USB power source connected to micro-USB connector 16c).

*Id.* at 65–66 (citing Ex. 1009, 3:1–21, 4:36–39). Petitioner argues that

> if a 5V USB power source is connected to the battery charging circuit when the battery to be charged is above 5V, then the circuit can operate "as a forward boost converter to increase the voltage level that is receive[d] at input terminal 102 to produce suitable voltage level at charging terminal 104 or system terminal 106." Thus, a [a person of ordinary skill in the art] would understand Paparrizos teaches a USB input circuit that can receive a 5V USB input and increase that power voltage up to approximately 12V via a DC-DC power conversion boosting

> technique to charge a device with a 3S (three Li-ion cells connected in series) battery pack.

*Id.* at 66–67 (internal citations omitted) (citing Ex. 1009, 3:58–4:4, 2:31–38 (discussing application to 3S stack of series connected cells), 8:10–30 (discussing use of forward boost mode to use a 5V USB input to charge a 3S battery which outputs 12V), 9:36–46 (discussing operation and components of boost converter); Ex. 1003 ¶ 163).

Petitioner explains that a person of ordinary skill in the art would "have found it obvious to implement the battery charging circuit of Paparrizos in Yu's device" because "Paparrizos identifies a need for using 'very popular' USB technology for charging multicell battery packs rated above 5V" and Paparrizos teaches a "battery charging circuit in a device that has batteries that can output 12V, like Yu's jump starter." Pet. 67 (citing Ex. 1009, 1:18–26, 2:32–38, 8:18–31). Petitioner also reasserts the evidence provided for the combination of Richardson and Zhou (*see supra* p. 25) as additional support for its modification of Yu and Paparrizos. *Id.* ("[O]utside the explicit teachings of Paparrizos, the desirability of 5V USB charging of devices with batteries of 5V was well-known to a [person of ordinary skill in the art] before the claimed priority date."). Petitioner further contends that a person of ordinary skill in the art "would be motivated to combine Yu's device to either (1) replace the charging circuitry, or (2) provide additional charging circuitry to enable an alternate means to charge Yu's device from a USB power source." *Id.* at 65 (citing Ex. 1003 ¶ 160).

With respect to the USB connector, i.e., limitation (g), Petitioner asserts that "Yu discloses a charging input interface, which can be a 12 V/1A barrel-style receptacle" and "[w]hile Yu is not explicit that the

charger's input interface could be a 5V USB input port," a person of ordinary skill in the art "would have found it obvious to combine the relevant disclosure of Paparrizos' USB-powered device with Yu's device in order to implement a USB charging feature for the device." Pet. 68 (citing Ex. 1008, Abstr., Fig. 9).

According to Petitioner, "USB technology was highly popular and provided desirable benefits such as avoiding proprietary chargers through universal chargers, cables, and connectors and other convenience such as ease of use and durability," and therefore, a person of ordinary skill in the art "would have been motivated to cater to the demand and interest in USB technology." Pet. 69 (citing Ex. 1003 ¶ 165). Petitioner further explains that a person of ordinary skill in the art "would have understood the need to add a USB receptacle, such as a micro-USB or other version of USB connector to Yu's device as taught by Paparrizos." *Id.* (citing Ex. 1009, 2:56–63, Figs. 1B, 1C). And, because a USB connector is a standard power input connector, Petitioner alleges that a person of ordinary skill in the art "would have been able to implement such a USB connector with Yu's disclosed device with relative ease." *Id.* (citing Ex. 1003 ¶ 66).

Patent Owner does not challenge many of Petitioner's allegations regarding the teachings of Yu and Paparrizos. *See generally* PO Resp. We have reviewed Petitioner's arguments and evidence, and agree—based on the information provided in the Petition—that the preponderance of the evidence supports Petitioner's contention that the combination of Yu and Paparrizos teaches each limitation of claim 1 of the '023 patent. Patent Owner does assert, however, that the skilled artisan would not have had reason to combine the teachings of Yu and Paparrizos as Petitioner suggests.

*Id.* at 25–38. Specifically, Patent Owner contents that Petitioner has failed to show a reason to combine because (1) Yu's device would not function properly with Paparrizos' USB charging port (*id.* at 39–41); (2) the combination of Yu and Paparrizos relies on impermissible hindsight (*id.* at 41–46); and (3) no explanation is provided about how to incorporate Paparrizos' USB charging port into Yu's system (*id.* at 46–47). We address Patent Owner's argument below.

*a) Whether Petitioner Has Shown a Reason to Include a USB Charging Port in Yu*

Patent Owner asserts that the Petitioner fails to provide adequate reasoning for combining the teachings of Yu and Paparrizos to include a USB input in Yu's jump starter. PO Resp. 39. Patent Owner argues that "Paparrizos does not teach or suggest applying its techniques beyond small electronics devices known to have low-capacity batteries" such as "[c]omputer tablets and other mobile devices, such as mobile phones, digital SLR cameras, video recorders, audio devices" having batteries that range from 3.0 to 8.4 volts. *Id.* at 40 (citing Ex. 1009, 1:13–15, 2:26–29). Patent Owner explains that such voltages are not suitable for charging large-capacity battery systems like jump starters. *Id.* Patent Owner states that Paparrizos provides confirmation where it states that "the USB specification imposes current limits for various devices that can be connected to the battery charging circuit." *Id.* at 40 (quoting Ex. 1009, 4:48–58).

Petitioner alleges that Patent Owner "ignores the express teachings of Paparrizos" in arguing that it is limited to small electronics. Pet. Reply 19. Petitioner contends that "Paparrizos expressly disclose[s] boosting 5V to 12V [and] it also explains its techniques apply to 'mobile devices' having

'battery packs with two (or more) Li-ion cells in series (so-called '2S or '3S' stacks or cells).'" *Id.* at 20 (citing Ex. 1009, 1:9–12, 8:22–26). Notably, Petitioner states that Patent Owner "does not deny that portable jump starters are mobile devices or that the '023 patent's only embodiment utilizes a battery architecture contemplated by Paparrizos, i.e., a 12V, 3-cell, series-connected battery back." *Id.* (citing Ex. 1001, 4:9–12). Petitioner also argues that Paparrizos is not limited to charging low capacity batteries and that Patent Owner's reference to "current limits" in the USB specification does not suggest otherwise. *Id.*

We disagree with Patent Owner that Petitioner has failed to provide an adequate reason to combine the teachings of Yu and Paparrizos. Petitioner explains that "Yu discloses that its device has a charging input interface which is depicted in Figure 9 as a 12V/1A barrel-style receptacle" and Paparrizos discloses a USB charging circuit " which can operate in a 'boost (power stepped up mode)' and a 'forward mode' to boost an input voltage from a USB source to a higher output to charge an internal battery of a device." Pet. 65. As Petitioner states, USB technology was well-known, convenient, easy to use, and durable. *Id.* at 68; *see also* Ex. 1003 ¶¶ 164–166 (same). Paparrizos confirms Petitioner's position and explains that that USB supported devices have become very popular and consumers expect to be able to charge their devices from USB power sources. Ex. 1009, 1:18–20. Therefore, Petitioner has provided sufficient reasoning with rational underpinnings to explain why a person of ordinary skill in the art would have had reason to combine the teachings of Yu and Paparrizos. *See KSR*, 550 U.S. at 418.

Patent Owner's arguments to the contrary are unconvincing. Specifically, we are unpersuaded by Patent Owner's argument that Paparrizos is not suitable for charging large capacity batteries and at voltages required by Yu. PO Resp. 40. Paparrizos' teachings are not so limited. Paparrizos describes a "battery charging circuit 100 may be connected to a battery 14 to provide power to electronics 12 comprising the electronic device 10" through a USB connector. Ex. 1009, 2:24–32. According to Paparrizos,

> The battery 14 may further comprise a single battery cell, or more than one battery cell connected in series. Battery 14, for example, may include 2 series-connected battery cells (a "2S stack"), but other *configurations involving 3, 4, or more series-connected cells are possible*. The battery voltage of such batteries typically range from 6–8.4V but *can provide lower or higher voltages*.

*Id.* at 2:34–40 (emphasis added). While Paparrizos describes "typical" voltages as ranging from 6 to 8.4 volts, Paparizzos clearly contemplates boosting the output voltage by increasing the number of series connected batteries. Dr. MacCarley testifies that a person of ordinary skill in the art would have understood that

> if a 5V USB power source is connected to the battery charging circuit when the battery to be charged is above 5V, then the circuit can operate "as a forward boost converter to increase the voltage level that is receive at input terminal 102 to produce suitable voltage level at charging terminal 104 or system terminal 106. Thus, a PHOSITA would understand Paparrizos as disclosing a USB input circuit that can receive a 5V USB input and increase that power voltage up to approximately 12V via a DC-DC power conversion boosting technique to charge a device with a 3S (three Li-ion cells connected in series) battery pack.

Ex. 1003 ¶ 163 (internal citations omitted). Dr. MacCarley notes that Dr. Fayed does not disagree and instead "implicitly recognizes that a PHOSITA would have understood it would have merely required selecting components with higher voltage ratings and switching capabilities." Ex. 1044 ¶ 15 (citing Ex. 2011 ¶ 108). Moreover, Patent Owner's position that Paparrizos is incapable of charging higher capacity batteries like those of Yu is not supported by the record. Similar to the '023 patent, neither Yu nor Paparrizos describe any requisite level of charging capacity and Patent Owner "cannot demand a greater level of detail from the prior art than is taught by the '023 patent." *See generally* Ex. 1008 and 1009; *Lockwood*, 107 F.3d at 1570.

Accordingly, we are persuaded Petitioner has provided an adequate reason to combine the teachings of Yu and Paparrizos.

*b) Whether the Combination of Yu and Paparrizos Involves Improper Hindsight Reconstruction*

Patent Owner contends that Petitioner's combination of Yu and Paparrizos is based on impermissible hindsight reconstruction because "Yu already contemplates and incorporates both USB output charging and DC-DC boost conversion."[12] PO Resp. 41. Patent Owner explains that "Yu's inventors chose to include a separate barrel charger and incorporated USB only as an output port to charge other smaller devices from the jump starter

[12] Patent Owner also references our decision in IPR2020-00944 "reject[ing] the alleged motivation to combine as 'conclusory,'" based on arguments similar to those advanced here. PO Resp. 45–46 (citing Ex. 1014, 92–93). However, the record in IPR2020-00944, unlike the present record, was lacking evidence in support of petitioner's proposed modification. Ex. 1014, 92–94).

battery . . . [which] is strong evidence that a PHOSITA would not, in fact, have made the proposed combination." *Id.* at 41 (citing Ex. 2011 ¶ 115); *see also id.* at 45 (same).

Petitioner asserts that "Yu's disclosure of USB output is distinct from its input in a manner that would not undermine the proposed reasons for combining Yu and Paparrizos." Pet. Reply 21. Petitioner contends that Patent Owner "speculates that Yu's inventors 'likely' selected USB only for output likely due to 'disadvantages associated with charging jump starters via USB'" and that Patent Owner's contention is not supported by Yu. *Id.*

We are also not persuaded by Patent Owner's assertion that Petitioner's combination is predicated on improper hindsight reconstruction. It is improper to base a conclusion of obviousness upon facts gleaned only through hindsight. "The invention must be viewed not after the blueprint has been drawn by the inventor, but as it would have been perceived in the state of the art that existed at the time the invention was made." *Sensonics, Inc. v. Aerosonic Corp.*, 81 F.3d 1566, 1570 (Fed. Cir. 1996) (citing *Interconnect Planning Corp. v. Feil*, 774 F.2d 1132, 1138 (Fed. Cir. 1985)). Therefore, "to establish a prima facie case of obviousness based on a combination of elements disclosed in the prior art, the [Petitioner] must articulate the basis on which it concludes that it would have been obvious to make the claimed invention." *Id.* Impermissible hindsight is inferred when the specific understanding or principle within the knowledge of one of ordinary skill in the art that would motivate one (with no knowledge of the claimed invention) to make the proposed combination has not been explained. *In re Rouffet*, 149 F.3d 1350, 1358 (Fed. Cir. 1998).

Here, Petitioner has provided sufficient reasoning with rational underpinnings to explain why the skilled artisan would have modified the teachings of the applied references. *See KSR*, 550 U.S. at 418. The modifications proposed by Petitioner are supported by the record. Pet. 65–68. And, while Yu does not describe a USB input circuit and instead relies on a barrel charger, Yu does describe a USB output circuit. Ex. 1008, Figs. 7, 9; Ex. 1003 ¶ 160). Paparrizos describes a USB input circuit and Petitioner contends that a person of ordinary skill in the art would have "either (1) replace[d] the charging circuitry [in Yu], or (2) provide[d] additional charging circuitry to enable an alternate means to charge Yu's device from a USB power source." Pet. 65 (citing Ex. 1003 ¶¶ 160–161; Ex. 1009, 2:56–63, Figs. 1B–1C); *see also* Pet. 45–49 (describing USB technology as standardized, flexible, durable, easy to use, convenient). Petitioner explains that a person of ordinary skill in the art would have had reason to include a USB as Yu's charging circuit because "Paparrizos identifies a need for using 'very popular' USB technology for charging multicell battery packs." Pet. 67 (citing Ex. 1:18–26). Specifically, Paparrizos states that

> The USB specification has become very popular and consumers have become used to being able to charge their USB devices from universal USB power sources. Consumers are used to USB, mini-USB, and micro-USB connectors being present in portable electronics and their use for battery charging from a USB power source.

Ex. 1009, 1:18–23. Thus, the reason to combine—that is, popularity, consumer acceptance, and availability—comes directly from the teachings of Paparrizos. Accordingly, we see no evidence of improper hindsight

reconstruction. Furthermore, any suggestion by Patent Owner that Yu's inventors had reason to avoid using a USB input port, without more, is conclusory and unconvincing.

Therefore, we are not persuaded that Petitioner's combination of Yu and Paparrizos is rooted in impermissible hindsight reconstruction.

*c) Whether Petitioner Has Shown How to Incorporate Paparrizos' USB charger Into Yu's Device*

Lastly, Patent Owner argues that "Yu does not specify its internal battery type . . . beyond the use of a barrel charger," and "no where does Petitioner attempt to show how Yu's system . . . would have been modified to include Paparrizos' complex charging circuitry." PO Resp. 46. Patent Owner contends that Petitioner's proposed modifications fall short because "Petitioner fails to address the added complexity and the safety risks associated with adding a second input charging circuit." *Id.* at 47.

Petitioner argues that there is no requirement to include "every feature in Paparrizos, including buck and reverse modes" in the combination with Yu. Pet. Reply 23. Petitioner further asserts that "the prior art provides comparable—if not more—detail as the '023 patent regarding the operation of the DC-DC boost converters." *Id.* at 24. And lastly, Petitioner asserts that a person of ordinary skill in the art would have known how to handle any safety risks using conventional technology. *Id.*

We are persuaded Petitioner has shown how a person of ordinary skill in the art would have combined the teachings of Yu and Paparrizos. In particular, Petitioner states that a person of ordinary skill in the art would have "either (1) replace[d] the charging circuitry, or (2) provide[d] additional charging circuitry to enable an alternate means to charge Yu's

device from a USB power source" and that "[e]ither option would have provided desirable features or improvements to Yu's jump starter." Pet. 65 (citing Ex. 1003 ¶ 160 (describing benefits such as popularity, convenience, ease of use, and durability)). Dr. MacCarley testifies that a person of ordinary skill in the art would have "need[ed] to add a USB receptable, such as a micro-USB or other version of USB connector, to Yu's device as taught by Paparrizos" and because these connectors are "standard power input connector[s], a PHOSITA would have been able to implement such a USB connector with Yu's disclosed device with relative ease." Ex. 1003 ¶ 166.

We do not find Patent Owner's arguments that Petitioner does not address how to implement Paparrizos' complex system or the "safety risks associated with adding a second input charging circuit" (PO Resp. 46–47) convincing. Patent Owner references Paparrizos' "numerous operating modes—many of which would be useless to the system of Yu" as well as Paparizos' configuration detector. *Id.* at 47. But, as Petitioner explains, the "Petition only proposes modifying Yu's jump starter to include a USB input connector and boost converter circuitry as taught by Paparrizos" and Patent Owner "mischaracterizes the combination by asserting that every feature of Paparrizos . . . must necessarily be utilized and described in the combination." Pet. Reply 23. "It is well-established that a determination of obviousness based on teachings from multiple references does not require an actual, physical substitution of elements." *In re Mouttet*, 686 F.3d 1322, 1332 (Fed. Cir. 2012); *see also In re Keller*, 642 F.2d 413, 425 (CCPA 1981) (explaining that "[t]he test for obviousness is not whether the features of a secondary reference may be bodily incorporated into the structure of the primary reference"). Furthermore, as discussed above, a person of ordinary

skill in the art would have known how to counteract any safety risks associated with having multiple charging input circuits using conventional technology. *See supra* Section II.D.2.a.

Nor are we convinced by Patent Owner's argument that Petitioner has not shown how to combine the teachings of Yu and Paparrizos because "Yu does not specify its internal battery type, and has very limited disclosure of its charging input circuit beyond the use of a barrel charger." PO Resp. 46. Yu does disclose that its charging output terminal connected to the internal battery is a 12 volt output terminal which appears to be a barrel-style receptacle. Ex. 1008 ¶ 4, Figs. 1, 9 (item 11). Dr. MacCarley testifies that

> while Yu does not explicitly disclose a USB input circuit as claimed, such USB input circuits were well-known and a PHOSITA would have been motivated to combine such a USB input circuit from the prior art to Yu's device, with predictability in such circuit's ability to charge the internal battery of Yu's device.

Ex. 1003 ¶ 160. Petitioner contends that the prior art provides a comparable level of detail as that of the '023 patent. *Lockwood*, 107 F.3d at 1570 (explaining that it is improper to require a greater level of detail in the prior art than exists in the challenged patent). And, as Petitioner aptly explains, "it would have taken relatively basic engineering effort to wire circuitry containing an off-the-shelf DC-DC boost converter between a power input interface and batteries for purposes of charging." Pet. Reply 24.

Thus, Petitioner has shown how to incorporate Paparrizos' USB charger into Yu's charging device.

* * *

Accordingly, Petitioner has shown by a preponderance of the evidence that the subject matter of claim 1 would have been suggested by the

combination of Yu and Paparrizos, prior to the application leading to the ’023 patent. Accordingly, we conclude that claim 1 would have been obvious over the combined disclosures of Richardson and Zhao.

*3. Analysis of Claims 32 and 52*

Claims 32 and 52 each recite similar subject matter to that of claim 1 (discussed above) and additionally require “the DC-DC converter [to] be turned on and off by a microprocessor” (Ex. 1001, 11:4–6 (claim 32)) and “the DC-DC converter [to] be turned on and off by an output from the microprocessor” (*id.* at 14:44–45 (claim 52)). Petitioner contends that “Paparrizos discloses a ‘workflow’ which a PHOSITA would understand to be best implemented by a microprocessor.” Pet. 69 (citing Ex. 1009, FIG. 5; Ex. 1003 ¶ 167). Petitioner argues that in the absence of a microprocessor, a person of ordinary skill in the art “would need to implement various configurations in hardware which are not explicitly described in Paparrizos” and further that “a microprocessor would be one of the most effective, reliable, and cost effective choice[s] for implementing control of the ON/OFF state of the buck boost circuit 212.” *Id.* at 70 (citing Ex. 1009, Fig. 9; Ex. 1003 ¶ 167). Petitioner reasons that a person of ordinary skill in the art would have implemented microprocessor control of the ON/OFF state of the boost controller because it would “allow[] the device to save power by disabling the DC-DC boosting feature when charging through the USB input circuit is terminated.” *Id.* (citing Ex. 1003 ¶ 168).

Patent Owner contends that Paparrizos does not describe using a microprocessor and further that Petitioner’s argument that a person of ordinary skill in the art would have understood Paparrizos’s “workflow” as

being implemented on a microprocessor, is unsupported and conclusory. PO Resp. 49–50. Furthermore, Patent Owner asserts that

> Petitioner never demonstrates that Paparrizos actually teaches or suggests controllably turning its buck boost converter between on and off states . . . [and] Petitioner's statement that "a microprocessor would be one of the most effective, reliable, and cost-effective choice for implementing control of the ON/OFF state of the buck boost circuit 212" is plain hindsight reasoning.

*Id.* at 50; *see also id.* at 51 (explaining that Petitioner's reference to Figure 6 of Paparrizos is insufficient because "in none of these operational modes would the DC-DC converter be 'turned off'"). Patent Owner contends that, in proper context, "the section of Paparrizos that Petitioner has selectively chosen to quote does not relate to controllably activating or deactivating the DC/DC conversion circuitry, but rather to the selection of the operational mode of the circuit." Sur-reply 23. Furthermore, even if Petitioner's reading is correct, Patent Owner asserts that "the discussion of 'activat[ing] the PWM modules,' at best, would only teach the DC-DC converter being turned on (*i.e.*, going from an inactive state to a selected operation mode)." *Id.* (citing Ex. 1009, 9:10–16). In short, Patent Owner alleges that "Petitioner has taken a reference that does not disclose either: (1) a microprocessor, or (2) controlling the ON/OFF state of a DC-DC converter, and has somehow relied on that reference to teach a 'DC-DC converter [that] can be turned on and off by an output from the microcontroller.'" PO Resp. 50–51.

Petitioner responds that a person of ordinary skill in the art "would have understood Paparrizos' teachings to encompass microprocessor control of a DC-DC converter," as detailed by Dr. MacCarley. Pet. Reply 25.

Petitioner further alleges that "Paparrizos' discussion of Figure 6 contemplates that 'the battery charging circuit may activate the PWM modules 312a, 312b, and boot cap refresh circuit 314', which is an indication that the DC-DC conversion circuitry is activated and deactivated (e.g., turned on and off)." *Id.* at 25 (citing Ex. 1009, 9:10–16; Ex. 1044 ¶ 17).

We find Petitioner's argument and evidence that Paparrizos suggests a microprocessor to turn on and off the DC-DC converter by a microprocessor to be persuasive. In particular, we are persuaded by Petitioner's contention that Paparrizos' "workflow" would have been understood by the skilled artisan to be best implemented by a microprocessor. *See* Pet. 69 (citing Ex. 1009, FIG. 5; Ex. 1003 ¶ 167). As Dr. MacCarley testifies,

> the Petition cites to Paparrizos's disclosure where "the battery charging circuit may activate the PWM modules 312a, 312b, and boot cap refresh circuit 314" as well as the subsequent disclosure regarding generation of pulses by the PWM (pulse width modulation) modules and signals asserted by the boot cap fresh circuit which control or interact with the components described and shown in connection with Figure 7A of Paparrizos (which depicts a boost converter). . . . [And] that buck boost circuit 212 is a DC-DC converter (Petition, p. 69), and therefore it would have been obvious that activating (e.g. turning on) the PWM modules (depicted as part of buck boost circuit 212 in Figure 7A of Paparrizos) would mean that the boost converter was previously in an "off" (e.g. deactivated) state before being turned on (and that it would likewise be capable of being turned back off).

Ex. 1044 ¶ 17 (internal citations omitted). Furthermore, Dr. MacCarley directs our attention to Dr. Fayed's testimony "identifyi[es] different modes where the buck boost converter of Paparrizos is functioning in an 'ON'

state" (Ex. 2011 ¶ 126) and reasons that functioning in an "on" state "is an obvious indication that the boost converter has an alternative 'OFF' state." Ex. 1044 ¶ 17. We credit the testimony of Dr. MacCarley.

*4. Remaining Claims 38, 39, 47, and 54*

Petitioner also alleges that the subject matter of claims 38, 39, 47, and 54 is rendered obvious by the combination of Yu and Paparrizos. Pet. 69–77. Patent Owner does not separately address the additional limitations of claims 38, 39, 47, and 54. *See generally* PO Resp. Based on our review of the Petition and accompanying evidence (see e.g., Pet. 70–77), we further determine that Petitioner has demonstrated by a preponderance of the evidence that the subject matter of claims 32, 38, 39, 47, 52, and 54 was suggested by the combination of Yu and Paparrizos, prior to the application leading to the '023 patent. Accordingly, we conclude that claims 38, 39, 47, and 54 would have been obvious over the combined disclosures of Yu and Paparrizos.

## III. CONCLUSION

For the foregoing reasons, Petitioner has satisfied its burden of demonstrating, by a preponderance of the evidence, that the subject matter of claims 1, 32, 38, 39, 47, 52, and 54 of the '023 patent are unpatentable.[13]

---

[13] Should Patent Owner wish to pursue amendment of the challenged claims in a reissue or reexamination proceeding after this decision issues, we draw Patent Owner's attention to the April 2019 Notice Regarding Options for Amendments by Patent Owner Through Reissue or Reexamination During a Pending AIA Trial Proceeding. *See* 84 Fed. Reg. 16,654 (Apr. 22, 2019). If Patent Owner chooses to file a reissue application or a request for

In summary:

| Claim(s) | 35 U.S.C. § | Reference(s)/ Basis | Claim(s) Shown Unpatentable | Claim(s) Not Shown Unpatentable |
|---|---|---|---|---|
| 1, 32, 38, 39, 47, 52, 54 | 103 | Richardson, Zhao | 1, 32, 38, 39, 47, 52, 54 | |
| 1, 32, 38, 39, 47, 52, 54 | 103 | Yu, Paparrizos | 1, 32, 38, 39, 47, 52, 54 | |
| **Overall Outcome** | | | 1, 32, 38, 39, 47, 52, 54 | |

## IV. ORDER

In consideration of the foregoing, it is hereby:

ORDERED that claims 1, 32, 38, 39, 47, 52, and 54 of U.S. Patent No. 11,447,023 B2 are unpatentable; and

FURTHER ORDERED that, because this is a Final Written Decision, parties to the proceeding seeking judicial review of the decision must comply with the notice and service requirements of 37 C.F.R. § 90.2.

---

reexamination of the challenged patent, we remind Patent Owner of its continuing obligation to notify the Board of any such related matters in updated mandatory notices. *See* 37 C.F.R. §§ 42.8(a)(3), (b)(2).

FOR PETITIONER:

Daisy Manning
Paul Smelcer
HUSCH BLACKWELL LPP
ptab-dmanning@huschblackwell.com
paul.smelcer@huschbalckwell.com

FOR PATENT OWNER:

Joseph Sauer
David Cochran
Matthew Johnson
John Graves
JONES DAY
jmsauer@jonesday.com
dcochran@jonesday.com
mwjohnson@jonesday.com
jgraves@jonesday.com