(19) Japan Patent Office (JP)

(12) **JAPANESE UNEXAMINED PATENT APPLICATION PUBLICATION (A)**

(11) Patent Application Disclosure
2005-25703
(P2005-25703)

(43) Publication Date: January 27, 2005 (2005.1.27)

(51) Int. Cl.[7]		FI		Theme code (ref.)
G06T 1/00	G06T	1/00	340 A	5B057
G06T 15/00	G06T	1/00	315	5B080
H04N 5/232	G06T	15/00	300	5C022
	H04N	5/232	Z	

Examination Request: Not Yet Number of Claims: 16 OL (Total: 41 pages)

(21) Application No.: 2003-271023 (P2003-271023)

(22) Date of Filing: July 4, 2003 (Heisei 15)

(71) Applicant 000002185
Sony Corporation
6-7-35 Kitashinagawa, Shinagawa-ku, Tokyo

(74) Agent 100082131
Yoshio Inamoto, Patent Attorney

(72) Inventor Rui Yamada
c/o Sony Kihara Research Center, 1-14-10 Higashigotanda, Shinagawa-ku, Tokyo

F-Term (Reference) 5B057 BA02 BA29 CA08 CA13 CA16 CB08 CB13 CB16 CC01 CF05 CG01 CH08 CH11 DA07 DA08 DA16 DB03
5B080 AA13 BA05 CA01 DA06 FA08 GA22
5C022 AA11 AB51 AC69

(54) [Title of Invention] IMAGE PROCESSING METHOD AND DEVICE, AND IMAGE PROCESSING PROGRAM

(57) [Abstract]
[Problem] To enable more accurately reducing or exaggerating image
[Resolution Means] An image data input unit 61 causes input image d
unit 81. A face detection processing unit 66 identifies a face image of
data stored in an image data storage unit 81. A three-dimensional face
unit 67 generates a three-dimensional face model used to correct disto
and calculates the positional relationship between a camcorder and th
dimensional virtual space, and a texture setting processing unit 68 set
subject as a texture for the three-dimensional face model. A corrected
corrects distortion of the face image in the image data using a three-di
dimensional virtual space. An image data outputting unit 70 acquires
outside of a DSP 16. The present invention can be applied to a camco
[Selected Drawing] FIG. 2

FIG. 2

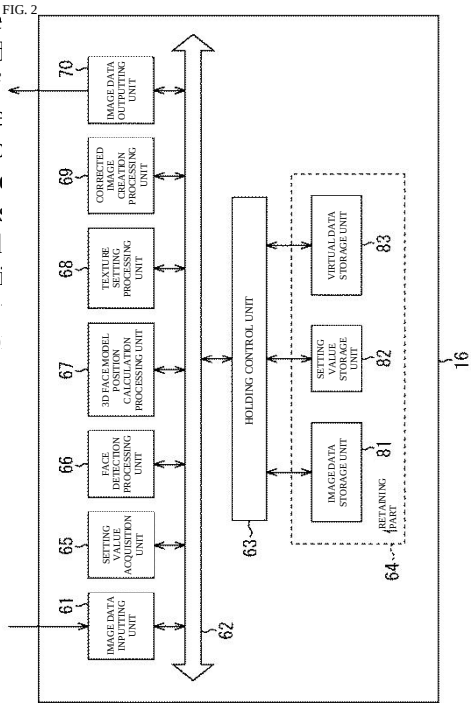

[Scope of Patent Claims]:
[Claim 1]
An image processing method of an image processing device that performs image correction processing on image data, the method comprising:
a detecting step of detecting a partial image, which is a portion of the aforementioned image and is subject to the correction, from the image corresponding to the image data; and
a deforming step of deforming the partial image detected by the process of the detecting step and included in the image corresponding to the image data.
[Claim 2]
An image processing method, wherein the deforming step further includes:
a distance detecting step of detecting a distance between an imaging means and a photograph subject corresponding to the partial image; and
a distance converting step of performing a conversion on the partial image corresponding to an image change that occurs when the distance is changed during photographing.
[Claim 3]
The image processing method according to claim 1, wherein
the image corresponding to the image data is a photograph image obtained by photographing a photograph subject; and
the partial image is an image of a face of the photograph subject.
[Claim 4]
The image processing method according to claim 1, wherein
the image corresponding to the image data is an image obtained by photographing the photograph subject from a position close to the photograph subject; and
the deforming step performs deformation of the partial image so as to correct image distortion caused by a three-dimensional shape of the photograph subject, which occurs in the partial image as a result of photographing the photograph subject from a position close to the photograph subject.
[Claim 5]
The image processing method according to claim 1, wherein
the image corresponding to the image data is an image obtained by photographing the photograph subject from a position close to the photograph subject; and
the deforming step performs deformation of the partial image so as to emphasize image distortion caused by the three-dimensional shape of the photograph subject, which occurs in the partial image as a result of imaging the photograph subject from a position close to the photograph subject.
[Claim 6]
An image processing device that performs image correction processing on image data, comprising:
detecting means for detecting a partial image, which is a portion of the aforementioned image and is subject to the correction, from the image corresponding to the image data; and
deforming means for deforming the partial image detected by the detecting means and included in an image corresponding to the image data.
[Claim 7]
An image processing program for performing image correction processing on image data, comprising:
a module that causes a computer to function as detecting means for detecting a partial image that is a portion of the image corresponding to the image data and is to be corrected; and
a module for causing the computer to function as deforming means for deforming the partial image detected by the process of the detecting step included in an image corresponding to the image data.

[Claim 8]
An image processing method of an image processing device that performs image correction processing on photograph image data, the method comprising:
a creating step of creating a three-dimensional model corresponding to a photograph subject of a first photograph image by a first photograph image corresponding to the photograph image data;
a calculating step of calculating a positional relationship between the photograph subject in the first photograph image and a position where the photograph subject is photographed; and
a generating step of generating a second photograph image obtained when photographing the photograph subject from a position different from the positional relationship calculated by the calculation step, using the three-dimensional model created by the process of the creating step.
[Claim 9]
The image processing method according to claim 8, wherein the photograph subject is a face.
[Claim 10]
The image processing method according to claim 8, wherein the three-dimensional model is a model composed of one ellipsoid.
[Claim 11]
The image processing method according to claim 8, wherein the three-dimensional model is a model configured by combining portions of a plurality of ellipsoids.
[Claim 12]
The image processing method according to claim 8, further comprising: a deleting step of deleting a portion not included in the first image from the three-dimensional model created by the process of the creating step; wherein
the generating step generates, as the second photograph image, an image onto which is projected the three-dimensional model from which the portion not included in the first image is deleted by the deleting step.
[Claim 13]
The image processing method according to claim 8, further comprising:
an image size adjusting step of adjusting an image size of the second photograph image so that a ratio of an image of the photograph subject to the first photograph image matches a ratio of an image onto which the three-dimensional model is projected to the second photograph image generated by the processing of the generating step.
[Claim 14]
The image processing method according to claim 8, further comprising:
a detecting step of detecting a portion that is an image of the photograph subject from the first photograph image; wherein
the calculating step calculates a positional relationship between the photograph subject in the first photograph image and a position where the photograph subject is photographed, on the basis of a size of a portion that is an image of the photograph subject detected by the process of the detecting step and an angle of view of a lens used in the photographing process that obtained the first photograph image.
[Claim 15]
An image processing device that performs image correction processing of photograph image data, comprising:
creating means for creating a three-dimensional model corresponding to a photograph subject of a first photograph image by a first photograph image corresponding to the photograph image data;
calculating means for calculating a positional relationship between the photograph subject in the first photograph image and a position where the photograph subject is photographed; and
generating means for generating a second photograph image obtained when photographing the photograph subject from a position different from the positional relationship calculated by the calculating means, using the three-dimensional model created by the creating means.

[Claim 16]
An image processing program for performing image correction processing on photograph image data, comprising:
a module for causing a computer to function as creating means for creating a three-dimensional model corresponding to a photograph subject of a first photograph image from the first photograph image corresponding to the photograph image data;
a module that causes a computer to function as calculating means for calculating a positional relationship between the photograph subject in the first photograph image and a position at which the photograph subject is photographed; and
a module that causes the computer to function as generating means for generating by using the three-dimensional model created by the process of the creating step, a second photograph image that is obtained when photographing an image of the photograph subject from a position different from the positional relationship calculated by the process of the calculating step.
[Detailed Description of the Invention]
[Technical Field of the Invention]
[0001]
The present invention relates to an image processing method and device, as well as an image processing program, and more particularly relates to an image processing method and device, and to an image processing program, which are capable of more accurately reducing or enhancing image distortion.
[Conventional Technology]
[0002]
In recent years, photographing devices such as digital still cameras and digital video cameras that photograph and record the obtained images as digital data have become widespread. In particular, in recent years, along with improvements in technology, photographing devices have become smaller and multifunctional in order to improve mobility and convenience. Furthermore, as these photographing devices become smaller, they no longer simply have a photographing function, and are often integrated with other information processing devices, such as mobile phones, PDAs, or personal computers, to form composite devices having functions other than the photographing function.
[0003]
In such a multifunctional device, the entire device is required to be compact, and therefore the photographing unit that provides the photographing function is required to be even more compact. Therefore, compared to digital still cameras and digital video cameras that only have a photographing function, these photographing units are often made smaller by limiting functions, such as by using smaller lenses, reducing the resolution of the images obtained, or by omitting the zoom function.
[0004]
When photographing a photograph subject with a multifunctional device having such an photographing unit, the size of the image obtained by photographing is smaller than that of a digital still camera or digital video camera that only has a photographing function, and a zoom function is not included, so if the photograph subject is located far from the device, the image of the photograph subject may be small, and a user may have more opportunities to photograph the photograph subject from a close distance.
[0005]
For example, when such a composite device is used to photograph a photograph subject from a close distance, if the photograph subject (such as a person's face or the like) is photographed close up by the photographing device, portions of the face of the photograph subject that are closer to the camera (lens), such as the nose or the like, compared to the surrounding areas of the face, will appear larger than portions of the face that are not as close, resulting in an image with an exaggerated sense of depth. This phenomenon is predictable due to the characteristics of the lens, and is different from distortion aberration caused by lens distortion. Furthermore, this phenomenon occurs not only in photographing devices such as the digital still cameras and digital video cameras described above, but also in silver halide cameras and the like. However, an image obtained by photographing under such circumstances is often not desirable to the user because the nose and other parts of the body appear unnecessarily larger than reality. In response to this, there is a method for correcting distortion that enhances the sense of depth that occurs in a photograph image by enlarging or reducing pixels of the photograph image depending on the position (see, for example, Patent Document 1).

[Patent Document 1] Japanese Unexamined Patent Application Publication 2002-247446 (pages 7 to 10, FIG. 7, FIG. 8, FIG. 12, FIG. 14, FIG. 15)
[Disclosure of the Invention]
[Problem to be Solved by the Invention]
[0006]
However, the aforementioned methods only perform conversion on the photograph image obtained by photographing, or in other words, a two-dimensional image, and the correction is not based on the actual distance of the photograph subject from the lens, so accurate correction cannot be performed.
[0007]
Furthermore, with these photographing devices, it is possible not only to correct the image as described above so as to eliminate distortion, but also to apply special effects to the photograph image, such as intentionally distorting the face of a photograph subject in the photograph image to make the image look entertaining, in order to increase the entertainment value of the image. However, with the aforementioned methods, it was unclear how to specifically deform the image to emphasize the sense of depth, which is the opposite of the direction of correction.
[0008]
Furthermore, with the aforementioned methods, it is assumed that the face of the photograph subject contained in the photograph image is located at the center of the photograph image, but the face of the photograph subject is not necessarily located at the center of the photograph image, and if the face of the photograph subject is not located at the center of the image, there is a problem that the correction may be even more inaccurate.
[0009]
Moreover, with the aforementioned methods, only certain patterns are used to deform the image. Therefore, it is not possible to accommodate individual differences in the shape of the face of the photograph subject. For the same reason, there is a problem that accurate correction cannot be performed when the orientation of the face is tilted.
[0010]
In light of the forgoing, the present invention can more accurately reduce or enhance image distortion.
[Means for Solving the Problem]
[0011]
The first image processing method of the present invention includes: a detecting step of detecting a partial image, that will be subject to the correction and which is a portion of the aforementioned image, from the image corresponding to the image data; and a deforming step of deforming the partial image detected by the process of the detecting step and included in the image corresponding to the image data.
[0012]
The deforming step can also include: a distance detecting step of detecting a distance between an imaging means and a photograph subject corresponding to the partial image; and a distance converting step of performing a conversion on the partial image corresponding to an image change that occurs when the distance is changed during photographing.
[0013]
The image corresponding to the image data can be a photograph image obtained by photographing a photograph subject; and the partial image can be an image of a face of the photograph subject.
[0014]
The image corresponding to the image data can be an image obtained by photographing the photograph subject from a position close to the photograph subject; and the deforming step can perform deformation of the partial image so as to correct image distortion caused by a three-dimensional shape of the photograph subject, which occurs in the partial image as a result of photographing the photograph subject from a position close to the photograph subject.
[0015]
The image corresponding to the image data can be an image obtained by photographing the photograph subject from a position close to the photograph subject; and the deforming step can perform deformation of the partial image so as to enhance image distortion caused by a three-dimensional shape of the photograph subject, which occurs in the partial image as a result of photographing the photograph subject from a position close to the photograph subject.

[0016]
The first image processing device of the present invention includes: detecting means for detecting a partial image, which is a portion of the aforementioned image and is subject to the correction, from the image corresponding to the image data; and deforming means for deforming the partial image detected by the process of the detecting means and included in the image corresponding to the image data.
[0017]
The first image processing program of the present invention, including:
a module that causes a computer to function as detecting means for detecting a partial image that is a portion of the image corresponding to the image data and is to be corrected; and a module for causing the computer to function as deforming means for deforming the partial image detected by the process of the detecting step included in an image corresponding to the image data.
[0018]
The second image processing method of the present invention is an image processing method of an image processing device that performs image correction processing on photograph image data, the method including:
a creating step of creating a three-dimensional model corresponding to a photograph subject of a first photograph image by a first photograph image corresponding to the photograph image data;
a calculating step of calculating a positional relationship between the photograph subject in the first photograph image and a position where the photograph subject is photographed; and a generating step of generating a second photograph image obtained when photographing the photograph subject from a position different from the positional relationship calculated by the calculation step, using the three-dimensional model created by the process of the creating step.
[0019]
The photograph subject can be a face.
[0020]
The three-dimensional model can be a model constituted by a single ellipsoid.
[0021]
The three-dimensional model can be a model configured by combining portions of a plurality of ellipsoids.
[0022]
The image processing method can also include a deleting step of deleting a portion not included in the first image from the three-dimensional model created by the process of the creating step; wherein the generating step generates, as the second photograph image, an image onto which is projected the three-dimensional model from which the portion not included in the first image is deleted by the deleting step.
[0023]
The image processing method can also include an image size adjusting step of adjusting an image size of the second photograph image so that a ratio of an image of the photograph subject to the first photograph image matches a ratio of an image onto which the three-dimensional model is projected to the second photograph image generated by the processing of the generating step.
[0024]
The image processing method can include a detecting step of detecting a portion that is an image of the photograph subject from the first photograph image; wherein the calculating step calculates a positional relationship between the photograph subject in the first photograph image and a position where the photograph subject is photographed, on the basis of a size of a portion that is an image of the photograph subject detected by the process of the detecting step and an angle of view of a lens used in the photographing process that obtained the first photograph image.
[0025]
The second image processing device of the present invention can include: creating means for creating a three-dimensional model corresponding to a photograph subject of a first photograph image by a first photograph image corresponding to the photograph image data;
calculating means for calculating a positional relationship between the photograph subject in the first photograph image and a position where the photograph subject is photographed; and generating means for generating a second photograph image obtained when photographing the photograph subject from a position different from the positional relationship calculated by the calculating means, using the three-dimensional model created by the creating means.
[0026]

The second image processing program of the present invention includes a module for causing a computer to function as creating means for creating a three-dimensional model corresponding to a photograph subject of a first photograph image from the first photograph image corresponding to the photograph image data;
a module that causes a computer to function as calculating means for calculating a positional relationship between the photograph subject in the first photograph image and a position at which the photograph subject is photographed; and a module that causes the computer to function as generating means for generating by using the three-dimensional model created by the process of the creating step, a second photograph image that is obtained when photographing an image of the photograph subject from a position different from the positional relationship calculated by the process of the calculating step.
[0027]
With the first image processing method and device as well as image processing program of the present invention, a partial image, which is a portion of the aforementioned image and is subject to the correction, is detected from the image corresponding to the image data; and the detected partial image included in the image corresponding to the image data is deformed.
[0028]
In the second image processing method and device, as well as the image processing program of the present invention, a three-dimensional model corresponding to the photograph subject of a first photograph image is created from a first photograph image corresponding to the photograph image data, the positional relationship between the photograph subject in the first photograph image and the position at which the photograph subject was photographed is calculated, and a second photograph image is generated using the created three-dimensional model, which is obtained when photographing the photograph subject from a position different from the calculated positional relationship.
[Effect of the Invention]
[0029]
The present invention can process images. In particular, the present invention can more accurately reduce or enhance image distortion.
[Preferred Embodiments of the Invention]
[0030]
Embodiments of the present invention are described below. The corresponding relationship between the constituent elements cited in the claims and specific examples of the embodiments of the present invention is as described below. This description is intended to confirm that specific examples supporting the inventions described in the claims are described in the embodiments of the present invention. Therefore, even if there is mention of a constituent element in the embodiments of the invention but that constituent element is not described herein for a specific example, this does not mean that the specific example does not correspond to that constituent element. Conversely, even if a specific example is described herein as corresponding to a constituent element, this does not mean that the specific example does not correspond to constituent elements other than the mentioned constituent element.
[0031]
Furthermore, this description does not mean that the inventions corresponding to the specific examples described in the embodiments of the invention are described in all of the claims. In other words, this description describes an invention corresponding to the specific examples described in the embodiments of the invention, and does not deny the existence of inventions not described in the claims of the present application, or in other words, inventions that may be filed in the future as divisional applications or added by amendment.
[0032]
[Claim 1] An image processing method of an image processing device (for example, the camcorder 1 of FIG. 1) that performs image correction processing on image data, the method comprising:
a detecting step (for example, step S3 of FIG. 3) of detecting a partial image, which is a portion of the aforementioned image and is subject to the correction, from the image corresponding to the image data; and
a deforming step (for example, step S4 and step S7 of FIG. 3) of deforming the partial image detected by the process of the detecting step and included in the image corresponding to the image data.

[Claim 2] An image processing method, wherein the deforming step further includes:
a distance detecting step (for example, step S4 of FIG. 3) of detecting a distance between an imaging means and a photograph subject corresponding to the partial image; and
a distance converting step (for example, step S5 and step S7 in FIG. 3) of performing a conversion on the partial image corresponding to an image change that occurs when the distance is changed during photographing.

[Claim 3] The image processing method according to claim 1, wherein
the image corresponding to the image data is a photograph image obtained by photographing a photograph subject; and
the partial image is an image (for example, face image 100 of FIG. 4) of a face of the photograph subject.

[Claim 4]The image processing method according to claim 1, wherein
the image corresponding to the image data is an image obtained by photographing the photograph subject from a position close to the photograph subject; and
the deforming step performs deformation of the partial image so as to correct image distortion caused by a three-dimensional shape of the photograph subject, which occurs in the partial image as a result of photographing the photograph subject from a position close to the photograph subject.

[Claim 5] The image processing method according to claim 1, wherein
the image corresponding to the image data is an image obtained by photographing the photograph subject from a position close to the photograph subject; and
the deforming step performs deformation of the partial image so as to emphasize image distortion caused by the three-dimensional shape of the photograph subject, which occurs in the partial image as a result of imaging the photograph subject from a position close to the photograph subject.

[Claim 6] An image processing device (for example, the camcorder depicted in FIG. 1) that performs image correction processing on image data, comprising:
detecting means (for example, face detection processing unit 66 in FIG. 2) for detecting a partial image, which is a portion of the aforementioned image and is subject to the correction, from the image corresponding to the image data; and
deforming means (for example, the three-dimensional face model position calculation processing unit 67 to the image data outputting unit 70 in FIG. 2) for deforming the partial image detected by the detecting means and included in an image corresponding to the image data.

[Claim 7] An image processing program for performing image correction processing on image data, comprising:
a module (for example, step S3 of FIG. 3) that causes a computer to function as detecting means for detecting a partial image that is a portion of the image corresponding to the image data and is to be corrected; and
a module (for example, step S4 to step S7 in FIG. 3) for causing the computer to function as deforming means for deforming the partial image detected by the process of the detecting step included in an image corresponding to the image data.

[Claim 8] An image processing method of an image processing device (for example, the camcorder of FIG. 1) that performs image correction processing on photograph image data, the method comprising:
a creating step (for example, step S21 of FIG. 5) of creating a three-dimensional model corresponding to a photograph subject of a first photograph image by a first photograph image corresponding to the photograph image data;
a calculating step (for example step S25 of FIG. 5) of calculating a positional relationship between the photograph subject in the first photograph image and a position where the photograph subject is photographed; and
a generating step (for example, step S5 to step S7 of FIG. 3) of generating a second photograph image obtained when photographing the photograph subject from a position different from the positional relationship calculated by the calculation step, using the three-dimensional model created by the process of the creating step.

[Claim 9] The image processing method according to claim 8, wherein the photograph subject is a face.

[Claim 10] The image processing method according to claim 8, wherein the three-dimensional model is a model composed of one ellipsoid.

[Claim 11] The image processing method according to claim 8, wherein the three-dimensional model is a model configured by combining portions of a plurality of ellipsoids.

[Claim 12] The image processing method according to claim 8, further comprising: a deleting step (for example, step S62 of FIG. 11) of deleting a portion (for example, portion 160 of FIG. 12) not included in the first image from the three-dimensional model created by the process of the creating step; wherein
the generating step generates, as the second photograph image, an image onto which is projected the three-dimensional model from which the portion not included in the first image is deleted by the deleting step.

[Claim 13] The image processing method according to claim 8, further comprising:
an image size adjusting step (for example, step S85 of FIG. 15) of adjusting an image size of the second photograph image so that a ratio of an image of the photograph subject to the first photograph image matches a ratio of an image onto which the three-dimensional model is projected to the second photograph image generated by the processing of the generating step.

[Claim 14] The image processing method according to claim 8, further comprising:
a detecting step (for example, step S3 of FIG. 3) of detecting a portion that is an image of the photograph subject from the first photograph image; wherein
the calculating step calculates a positional relationship between the photograph subject in the first photograph image and a position where the photograph subject is photographed, on the basis of a size of a portion that is an image of the photograph subject detected by the process of the detecting step and an angle of view of a lens used in the photographing process that obtained the first photograph image.

[Claim 15] An image processing device that performs image correction processing of photograph image data, comprising:
creating means (for example, the three-dimensional face model position calculation processing unit 67 in FIG. 2 that executes the process of step S21 in FIG. 5) for creating a three-dimensional model corresponding to a photograph subject of a first photograph image by a first photograph image corresponding to the photograph image data;
calculating means (for example, three-dimensional face model position calculation processing unit 67 in FIG. 2 that executes the process of step S26 in FIG. 5) for calculating a positional relationship between the photograph subject in the first photograph image and a position where the photograph subject is photographed; and
generating means (for example, the texture setting processing unit 68 to the image data outputting unit 70 in FIG. 2) for generating a second photograph image obtained when photographing the photograph subject from a position different from the positional relationship calculated by the calculating means, using the three-dimensional model created by the creating means.

[Claim 16] An image processing program for performing image correction processing on photograph image data, comprising:
a module (for example, step S21 of FIG. 5) for causing a computer to function as creating means for creating a three-dimensional model corresponding to a photograph subject of a first photograph image from the first photograph image corresponding to the photograph image data;
a module (for example, step S25 of FIG. 5) that causes a computer to function as calculating means for calculating a positional relationship between the photograph subject in the first photograph image and a position at which the photograph subject is photographed; and
a module (for example, step S5 and step S7 of FIG. 3) that causes the computer to function as generating means for generating by using the three-dimensional model created by the process of the creating step, a second photograph image that is obtained when photographing an image of the photograph subject from a position different from the positional relationship calculated by the process of the calculating step.

[0033]
Embodiments of the present invention will be described below with reference to the drawings.
[0034]
FIG. 1 is a block diagram depicting an example of a configuration of a camcorder using the present invention. As depicted in FIG. 1, the camcorder 1 is a photographing device that photographs a photograph subject, records the resulting image information (moving image or still image) in a recording medium, and displays an image corresponding to the image information on a display. The camcorder has a CCD (Charge Coupled Device) 13, which is a solid-state imaging element that converts light input via a lens 11 and an aperture 12 into an electrical signal.
[0035]
The CCD 13 is a charge-coupled element in which a plurality of photodiodes (photoelectric elements) are arranged in a plane (matrix), and photoelectrically converts light from a photograph subject (not depicted) into an electrical signal and outputs the electrical signal. Note that instead of a CCD, a CMOS sensor, which is an image sensor that uses a complementary metal oxide semiconductor (CMOS), or other solid-state imaging element may be used. A preprocessing circuit 14 is composed of a CDS circuit (Correlated Double Sampling circuit) and an AGC circuit (Automatic Gain Control circuit), neither of which are depicted, and the like. For example, the CDS circuit removes noise components from the input image signal, and the AGC circuit adjusts the gain of the image signal and supplies the processed signal to an A/D (Analog/Digital) conversion unit 15. The A/D conversion unit 15 converts the image signal (analog signal) supplied from the pre-processing circuit 14 into a digital signal, and outputs to a DSP (Digital Signal Processor) 16 as image data.
[0036]
The DSP 16 is a block having a signal processor and an image RAM, and the signal processor is capable of performing pre-programmed image processing on the image data stored in the image RAM, such as image correction processing and the like to suppress distortion of the image corresponding to the image data. An example of the configuration of the DSP 16 will be described in detail below. The DSP 16 supplies the image data that has been subjected to the image processing to a codec unit 17.
[0037]
Note that the image corresponding to the image data is an image that is displayed on a display based on the image data, which is an electrical signal, and represents the image data (content of the image data). Therefore, for example, the content of an image corresponds to the content of the image data, and image correction processing for correcting the image is performed on the image data. In the following description, when there is no need to distinguish between images and image data, the terms image and image data will be described interchangeably. In other words, for example, the phrase "correcting an image" is equivalent to "performing image correction processing on image data".
[0038]
The codec unit 17 performs encode processing on the image data supplied from the DSP 16 using a predetermined method, and supplies the encoded image data to an image storage unit 18. The image storage unit 18 is composed of a semiconductor memory such as a RAM or a flash memory, a magnetic recording medium such as a hard disk, or other recording media such as a magneto-optical disk or an optical disk, and stores the image data supplied from the codec unit 17.
[0039]
In addition, the DSP 16 supplies the image data that has been subjected to image processing not only to the codec unit 17 but also to a D/A conversion unit 19. The D/A conversion unit 19 is configured with a D/A converter or the like, converts the image data, which is a digital signal supplied from the DSP, to an analog signal, and supplies the analog signal to the video encoder 20. The video encoder 20 converts the acquired analog signal to a video signal and supplies the video signal to a video monitor 21. The video monitor 21 is configured with a display such as a CRT (Cathode Ray Tube) or LCD (Liquid Crystal Display), or the like, and displays an image corresponding to the video signal supplied from the video encoder 20. The video monitor 21 is used by the user in place of the viewfinder of the camcorder 1. In other words, the user can perform photographing while confirming the image displayed on the video monitor 21.

[0040]
The DSP 16, the codec unit 17, and the image storage unit 18 are connected via a bus 30 to a CPU 41 that controls each unit of the camcorder 1, and are controlled by the CPU 41 via the bus 30 to supply data to the CPU 41.
[0041]
The CPU 41 controls each unit and executes various processes according to a program stored in the ROM 42, or a program loaded into the RAM 43 from a removable medium 51 attached to the drive 47 or from outside the camcorder 1 via the communication unit 357. The RAM 43 also stores data necessary for the CPU 41 to execute various processes as appropriate. The RAM 43 also temporarily stores image information and the like that is processed by the various units.
[0042]
In addition, the CPU 41 controls a timing generator (TG) 31 via the bus 30, based on instruction information from a user input from an input unit 56, control information supplied from the DSP 16, or information obtained by executing various programs.
[0043]
The timing generator 31 is a circuit that outputs a control signal that determines the operation timing, and controls the operation timing of the various units such as the CCD 13, the pre-processing circuit 14, the A/D conversion unit 15, and the DSP 16 by supplying a timing control signal.
[0044]
Furthermore, the bus 30 connects input units 44 such as a keyboard, mouse, or the like, storage units 45 configured by a hard disk or the like, and a communication unit 46 configured with a wired configuration interface such as USB (Universal Serial Bus), IEEE (Institute of Electrical and Electronic Engineers) 1394, Ethernet (registered trademark), and the like, or wireless communication interface such as IEEE 802.11 or Bluetooth, or the like. The communication unit 46 controls communication process with other devices via a wired or wireless network including the Internet, and the like.
[0045]
A drive 47 is also connected as necessary to the bus 30, and removable media 51 such as a magnetic disk, optical disk, magneto-optical disk, or semiconductor memory are appropriately attached. Computer programs and data read therefrom are installed in the storage unit 45 as necessary. In addition, based on user instructions, the program being executed, and the like, the CPU 41 stores, for example, image data stored in the image storage unit 18, image data supplied from the DSP 16 or the codec unit 17, image data stored in the RAM 43 or the memory unit 45, or image data obtained via the communication unit 46, in a removable medium 51 attached to the drive 47.
[0046]
Next, an example of the internal configuration of the DSP 16 in FIG. 1 will be described below. FIG. 2 is a block diagram depicting a detailed example of the internal configuration of the DSP.
[0047]
As described above, the DSP 16 is a unit that performs image correction processing on the supplied image data. For example, image data supplied from outside the DSP 16, such as from the A/D conversion unit 15 or the like, is supplied to an input unit for the image data 61 of the DSP 16. The image data input unit 61 has a built-in buffer or the like, not depicted, accumulates the input image data, and supplies the data to a storage control unit 63 via the internal bus 62 for each predetermined amount of data, for example, for each frame or the like, and stores the data in the image data storage unit 81 built into the storage unit 64 controlled by the storage control unit 63. Furthermore, the image data input unit 61 also receives setting information and the like relating to the various setting values, for example.
[0048]
The storage control unit 63 is connected to the internal bus 62 of the DSP 16 and also to the storage unit 64, and controls the input and output of data by the storage unit 64. In other words, the storage control unit 64 controls the input and output of data by the image data storage unit 81 which operates as an input/output interface for the storage unit 64 and stores image data stored in the storage unit 64, the setting value storage unit 82 which stores various setting values, and the virtual data storage unit 83 which stores virtual data such as a virtual three-dimensional space which will be described later.

[0049]
The storage unit 64, the image data storage unit 81, the setting value storage unit 82, and the virtual data storage unit 83 are all composed of memory elements such as semiconductor memory, for example, SRAM (Static Random Access Memory), DRAM (Dynamic Random Access Memory), and the like. Therefore, the image data storage unit 81, the setting value storage unit 82, and the virtual data storage unit 83 may be mutually different parts of the storage region of the storage unit 64.
[0050]
The internal bus 62 is also connected to a setting value acquisition unit 65 that acquires various setting values, a face detection processing unit 66 that detects the facial portion of the photograph subject (hereinafter referred to as the face image) from an image corresponding to the acquired image data, a three-dimensional face model position calculating unit 67 that calculates the position of a three-dimensional face model (described later) in three-dimensional virtual space, a texture setting processing unit 68 that performs processing to set the texture of the three-dimensional face model, a corrected image creation processing unit 69 that performs image correction processing on the image data input from the image data input unit 61, and an image data outputting unit 70 that outputs image data.
[0051]
The setting value acquisition unit 65 is connected to the internal bus 62 and acquires setting information regarding various setting values from external sources, for example, via the image data input unit 61, and stores the information in the setting value storage unit 82 via the storage control unit 63.
[0052]
The face detection processing unit 66 acquires image data stored in the image data storage unit 81 via the storage control unit 63, and identifies a portion of the image that is a facial image of the photograph subject. The three-dimensional face model position calculation processing unit 67 generates a three-dimensional face model used to correct distortion of the face image of the image data stored in the image data storage unit 81 based on the setting values and the like stored in the setting value storage unit 82, and performs processing such as calculating the position of the three-dimensional face model in three-dimensional virtual space, and the like. In addition, the three-dimensional face model position calculation processing unit 67 causes information on the generated three-dimensional virtual face model, the three-dimensional virtual space, and the like, to be stored in the virtual data storage unit 83 via the storage control unit 63. The texture setting processing unit 68 performs processing for setting a face image of the image data stored in the image data storage unit 81 as a texture for the three-dimensional face model generated by the three-dimensional face model position calculation processing unit 67. The corrected image creation processing unit 69 performs processing to correct distortion of the face image of the image data stored in the image data storage unit 81 using the three-dimensional virtual space and the three-dimensional face model generated by the three-dimensional face model position calculation processing unit 67. The corrected image creation processing unit 69 causes the image data after correction to be stored in the image data storage unit 81 via the storage control unit 63. Note that the corrected image data may be supplied to the image data outputting unit 70 via the internal bus 62.
[0053]
The image data outputting unit 70 has a built-in buffer or the like (not depicted), and, for example, accesses the storage control unit 63 via the internal bus 62, acquires the corrected image data stored in the image data storage unit 81 built into the storage unit 64 controlled by the storage control unit 63, accumulates the data in the built-in buffer or the like, and outputs the accumulated image data to the outside of the DSP 16 at predetermined timing. In addition, when the corrected image data is supplied from the corrected image creation processing unit 69 to the image data outputting unit 70 via the internal bus 62, the image data outputting unit 70 accumulates the supplied image data in a built-in buffer and outputs the accumulated image data to the outside of the DSP 16 at predetermined timing.
[0054]
In the forgoing, the components constituting the DSP 16 have been described as being configured separately from each other, but this is a limitation so long as the DSP 16 has each of the aforementioned functions. For example, a portion or all of the functions of the aforementioned components may be configured as other components, and the aforementioned components may all be integrated into one unit.

[0055]
Next, the operation of the camcorder 1 depicted in FIG. 1 is described below.
[0056]
Incident light that passes through an optical system including the lens 11, the aperture 12, and the like and reaches the solid-state imaging element 3 first reaches each light receiving element on the photographing surface, where the light is converted into an electrical signal (image signal) by photoelectric conversion in the light-receiving element. The electrical signal is then supplied to a pre-processing circuit 14, where noise in the image signal is removed by a correlated double sampling circuit (not depicted) built into the pre-processing circuit 14, and the gain of the image signal is adjusted in the AGC circuit. The pre-processing circuit 14 supplies the image signal subjected to each process to an A/D converter 15. The A/D converter 15 digitizes the acquired image signal (analog signal) and supplies the signal to the DSP 16 as photograph image data obtained by photographing. The DSP 16 temporarily stores the photograph image data supplied via the image data input unit 61 in FIG. 2 in the image data storage unit 81.
[0057]
When photograph processing is being performed to acquire moving images (moving image data), the timing generator 31 controls units related to the photographing function for acquiring photograph image data, such as the CCD 13, pre-processing circuit 14, A/D conversion unit 15, DSP 16, and the like, based on control by the CPU 41, so as to maintain image capture processing at a constant frame rate. Therefore, a pixel stream is also sent to the DSP 16 at a constant rate, where appropriate image processing is performed, such as image correction processing to correct distortion contained in the photograph image, and then the photograph image data is sent to the D/A converter 19, the CODEC 17, or both. Furthermore, the DSP 16 may supply the photograph image data via the bus 30 to the CPU 41, the RAM 43, the storage unit 45, the communication unit 46, or the removable medium 51 attached to the drive 47.
[0058]
The D/A converter 19 converts the photograph image data (digital signal) supplied from the DSP 16 into an analog signal, which is then converted by the video encoder 20 into a video signal. The video signal is then processed by the video monitor 21 to display an image (photograph image) corresponding to the video signal. At this time, the user of the camcorder 1 can perform photographing while referring to the video monitor 21 (the photograph image displayed on the video monitor 21) as a viewfinder. Furthermore, the codec unit 17 also performs encode processing on the photograph image data supplied by the DSP 16, and the photograph image data encoded by a predetermined encoding method is recorded in the image storage unit 18. Herein, the image storage unit 18 may be a recording device using a semiconductor memory, a magnetic recording medium, a magneto-optical recording medium, an optical recording medium, or the like. In other words, the image storage unit 18 may be configured as a separate entity from the camcorder 1.
[0059]
The CPU 41 controls each part of the camcorder 1 via the bus 30 based on programs and data stored in a ROM 42 or the like, or programs, data, and the like developed in the RAM 43. The input unit 44 receives instructions from a user, and supplies the input information to the CPU 41 and the RAM 43. Based on the input information, the CPU 41 controls each unit and executes various processes that can be executed by the camcorder 1.
[0060]
Next, the process of correcting distortion contained in a photograph image executed by the DSP 16 will be described in detail.
[0061]
For example, when the user operates a photograph storage start button (not depicted) and the like included in the input unit 44 to input an instruction to start photographing, the CPU 41 controls the timing generator 31 and the like to start a photographing process. When the photographing process is started, as described above, light from the photograph subject is captured, converted into an electrical signal (image signal), and subjected to various processes. Furthermore, the image signal is then converted into digital signal photograph image data in the A/D conversion unit 15 and supplied to the DSP 16, for example, on a frame-by-frame basis.

[0062]
If the photograph image data is supplied in frame units, the DSP 16 starts image correction processing on the photograph image data in acquired frame units. The image correction process performed by each unit of the DSP 16 will be described with reference to the flow chart of FIG. 3. The description will be made with reference to FIG. 3, as necessary.
[0063]
First, in step S1, the image data input unit 61 of the DSP 16 in FIG. 2 supplies the acquired photograph image data to the storage control unit 63 via the internal bus 62, the image data is stored in the image data storage unit 81 of the storage unit 64, and then the process proceeds to step S2.
In step S2, the setting value acquisition unit 65 acquires various setting values, such as the degree of correction input by the user by operating the input unit 44 from the RAM 43 via the bus 30, supplies the values to the storage control unit 63 via the internal bus 62, and has the values stored in the setting value storage unit 82 of the storage unit 64.
[0064]
As will be described later, the DSP 16 first obtains the positional relationship between the camera and the face at the time of photographing, and then virtually changes the relationship to synthesize an image as if photographed. Therefore, the user can specify the degree of correction by inputting the distance between the camera and the face after correction. If a value greater than the actual photographing distance is selected as the corrected distance, an image is obtained that is corrected so that the sense of depth is not noticeable, and conversely, if a smaller value is selected, an image is obtained in which the sense of depth is more exaggerated. The degree of correction designated by the user is stored in the RAM 43.
[0065]
After causing the various setting values to be stored in the setting value storage unit 82, the setting value acquisition unit 65 advances the process to step S3.
[0066]
In step S3, the face detection processing unit 66 acquires the photograph image data stored in the image data storage unit 81 by the process of step S1 via the storage control unit 63, and performs face detection processing on the photograph image data.
[0067]
FIG. 4 is a diagram depicting an example of the state of the photograph image. In FIG. 4, a photograph image 90 obtained by photographing includes a face image 100 which is an image of the face of the photograph subject. The face detection processing unit 66 performs face detection processing on the photograph image data corresponding to such a photograph image, detects a face image 100, and calculates the center position 110 of the portion where the width of the face image 100 is widest, the height 101 from the center 110 to the top of the head, the height 102 from the center 110 to the bottom of the chin, the width 103 of the face image 100, and the tilt 104 of the face image 100 from the vertical direction in the image 90. Points 111 and 112 represent end portions of the face image 100 that are at the same height as the center 110, and are calculated from the center 110, the inclination 104 of the face image 100, and the width 103 of the face image 100. As will be described later, points 111 and 112 are used to specify the positional relationship between the camcorder 1 and the three-dimensional face model in three-dimensional virtual space.
[0068]
For more information on face detection, see, for example, Ming-Hsuan Yang, David Kriegman, and Narendra Ahuja, "Detecting Faces in Images: A Survey", IEEE Transactions on Pattern Analysis and Machine Intelligence (PAMI), vol. 24, no. 1, pp. 34-58, 2002., a commonly used method may be used, such as various face detection methods.
[0069]
After completing the face detection process, the face detection processing unit 66 advances the process to step S4. In step S4, the three-dimensional face model position calculation processing unit 67 executes a three-dimensional face model position calculation process to calculate the positional relationship in three-dimensional virtual space between the camcorder 1 and the photograph subject during photographing. Note that the three-dimensional face model position calculation process will be described below in detail with reference to the flowchart of FIG. 5. When the three-dimensional face model position calculation process is completed, the three-dimensional face model position calculation processing unit 67 advances the process to step S5.

In step S5, the texture setting processing unit 68 performs texture setting processes to remove unnecessary portions of the three-dimensional face model and performs a process of setting the texture of the model. Note that the texture setting process will be described below in detail, with reference to the flowchart of FIG. 11. After completing the texture setting process, the texture setting processing unit 68 advances the process to step S6.

[0070]

In step S6, the corrected image creation processing unit 69 performs a corrected image creation process, virtually moving the position of the camera focal point, moving the position of the camera focal point along the z-axis of the three-dimensional coordinates in three-dimensional virtual space so that the setting value input in step S1 becomes the distance between the three-dimensional face model and the camera focal point, and after moving the camera focal point, rendering the three-dimensional face model and creating the final corrected image. Note that the corrected image creation process will be described below in detail with reference to the flowchart of FIG. 15. After completing the corrected image creation process, the corrected image creation processing unit 69 advances the process to step S7.

[0071]

In step S7, the image data outputting unit 70 acquires the photograph image data that has been subjected to the corrected image creation process in step S6 via the storage control unit 63, and outputs the data to the outside of the DSP 16. After outputting the photograph image data, the image data outputting unit 70 terminates the image correction process for that frame image.

[0072]

Each unit of the DSP 16 executes the aforementioned image correction processing for each supplied frame image. In this manner, the DSP 16 can easily and more accurately reduce or enhance image distortion for each frame image, and can similarly process the image subject to processing whether it is a moving image or a still image.

[0073]

Note that in the flowchart of FIG. 3, a portion or all of the processing of each step may of course be performed chronologically in the order described, but the processing is not necessarily performed chronologically. For example, the processing may be executed in parallel, individually, or as a subroutine in another step. In addition, a portion or all of the processing of each step in the flowchart of FIG. 3 may be processed in parallel with steps in other flowcharts depicted below, rather than being limited to the flowchart of FIG. 3, or may be executed as a subroutine in other steps. Note that the same can also be applied to each step of other flowcharts described below.

[0074]

Next, the three-dimensional face model position calculation process executed in step S4 in FIG. 3 will be described below in detail with reference to the flowchart in FIG. 5. The description will be made with reference to FIG. 6 to FIG. 8 as necessary.

[0075]

First, in step S21, the three-dimensional face model position calculation processing unit 67 sets the three-dimensional face model corresponding to the face image of the photograph subject.

[0076]

FIG. 6 is a diagram depicting an example of a three-dimensional face model. The three-dimensional face model position calculation processing unit 67 uses a three-dimensional face model 120 having a shape like a combination of upper and lower halves of two types of ellipsoids as depicted in FIG. 6A. As depicted in FIG. 6A, the three-dimensional face model has the shape of two ellipsoids with the same horizontal radius in the figure, with an upper ellipsoid 121 including the upper half of one ellipsoid and a lower ellipsoid 122 including the lower half of the other ellipsoid, joined together at the cut surfaces. In other words, in the three-dimensional face model, the upper ellipsoid 121 and the lower ellipsoid 122 have the same radius in the horizontal direction in the figure, but the radii in the vertical direction in the figure are independent of each other. Therefore, assuming such a three-dimensional shape, by changing the values of length 130, length 131, and length 132 described below, faces of the various shapes can be maintained from a perfect sphere as depicted in FIG. 6A to an egg-like shape as depicted in FIG. 6B.

[0077]

As depicted in FIG. 6, when a 3D face model is cut horizontally, the cut edge will always be a circle.

In particular, the radius of the circle where the horizontal cut of the three-dimensional face model is the largest, or in other words, the length of the radius of the circle that is the joint surface of the two ellipsoids, is taken as length 130, and the center point 133 of that circle is taken as the center of the three-dimensional face model. As depicted in FIG. 6, the length from the center point 133 to the upper end is length 131, and the length from the center point 133 to the lower end is length 132, on the vertical axis passing through the center point 133.

[0078]

Note that of the values related to the three-dimensional face model 120 in FIG. 6 described above, length 130 is a value indicating the size of the head of the photograph subject, and therefore the possible range of values is somewhat limited, so a predetermined value can be set in advance. For example, based on the human body size database of the National Institute of Advanced Industrial Science and Technology Living & JIS Center (http://unit.aist.go.jp/pubrel/indusstan/ljis/theme/final/finalreports/anthrop.htm), the head width of Japanese people varies little by height or gender, and is roughly the same size (about 15 to 16 cm). Therefore, the size of length 130 is set to this size. In contrast, other aspects of the face shape, such as the length from nose to chin, are thought to vary slightly from person to person. Therefore, since fixed values cannot be used for the lengths 131 and 132 in all cases, these lengths must be set by the method described below. Note that the three-dimensional face model 120 may be expressed in any form, and may be defined, for example, by an expression using a function or an expression using polygons.

[0079]

When such a three-dimensional face model 120 is set as a model of the face image detected in the photograph image, or in other words, the face of the photograph subject, the three-dimensional face model position calculation processing unit 67 proceeds to step S22 and sets three-dimensional virtual space with the center of the photographing unit (hereinafter referred to as the camera), which is the unit that performs the photographing process of the camcorder 1, as the origin, in order to calculate the positional relationship between the camcorder 1, the photograph subject (three-dimensional face model 120), and the like. The three-dimensional face model position calculation processing unit 67 sets a three-dimensional virtual space including three-dimensional coordinates, as depicted in FIG. 7, with the camera focal point 140 as the origin, the optical axis direction as the z-axis, the horizontal direction of the photograph image as the x-axis, and the vertical direction as the y-axis.

[0080]

In this three-dimensional virtual space, a camera focal point 140 indicates the focal point position of the camera, as will be described later. Therefore, the origin of the three-dimensional virtual space needs to be set at the center of the lens 11, which is the focal point position. However, since the optical system of an actual camera is more complex and setting is more difficult, for the sake of simplicity, the center of the camera, which is the photographing unit of the camcorder 1, may be set as the origin. In this manner, the origin of the three-dimensional virtual space is not necessarily only at the focal point position, but can instead be at another position near the focal point position.

[0081]

Returning to FIG. 5, after completing the processing of step S22, the three-dimensional face model position calculation processing unit 67 proceeds to the process of step S23, and, as depicted in FIG. 7, places a virtual screen with an image of the three-dimensional face model 120 in the three-dimensional virtual space and sets the size of the virtual screen.

[0082]

In FIG. 7, the virtual screen 142 on which the three-dimensional face model is imaged is a virtual object representing the CCD 13 in three-dimensional virtual space, and is set to be perpendicular to the optical axis, with the horizontal direction parallel to the x-axis and the vertical direction parallel to the y-axis, at a certain distance d from the origin. Here, the focal length of the camera used for photographing (in other words, the distance between the lens 11 and the CCD 13) is set as distance d. In actuality, the CCD 13 is located in the opposite direction as the photograph subject when viewed from the lens 11, but the virtual screen 142 is set at the position of the CCD 13 with the lens 11 at the center, or in other words, at a position a distance d away from the lens 11 in the direction of the photograph subject. A three-dimensional face model will be imaged on the virtual screen 142 set in this manner at the same size as when imaged on the CCD 13. As described above, the virtual screen 142 is set as a substitute for the CCD 13 in the three-dimensional virtual space.

[0083]
After setting the distance d, the three-dimensional face model position calculation processing unit 67 sets the size of the virtual screen 142. The size of the virtual screen 142 is set to be the same as the size of the CCD 13. Moreover, the three-dimensional face model position calculation processing unit 67 can set the size of the virtual screen 142 by using the camera angle of view and the distance d instead of the size of the CCD 13. In this case, the three-dimensional face model position calculation processing unit 67 may set an appropriate size for the distance d, and determine the size of the virtual screen 142 based on the angle of view.
[0084]
Returning to FIG. 5, the three-dimensional face model position calculation processing unit 67 advances to the process of step S24, and maps the face image 100, which is the face detection result detected by the process of step S3 in FIG. 3 on the virtual screen 142. The virtual screen 142 is a virtual object representing the CCD 13, and the photograph image 90 including the face image 100 is an image obtained by the CCD 13, so the aspect ratio of the photograph image 90 and the virtual screen 142 match. Therefore, the three-dimensional face model position calculation processing unit 67 simply enlarges or reduces the photograph image 90 without changing the aspect ratio of the image, and maps the face recognition result onto the virtual screen 142.
[0085]
After mapping the face recognition result onto the virtual screen 142, the three-dimensional face model position calculation processing unit 67 then advances to the process of step S25, executes distance calculation processing, and calculates the position of the three-dimensional face model 120.
[0086]
First, attention is paid to the center point 110, point 111, and point 112 in the face detection result depicted in FIG. 4. The center point 110, point 111, and point 112 are points on a horizontal cut edge (having a circular shape) passing through the center point 133 of the three-dimensional face model 120 in FIG. 6, and indicate the portion captured on the image. The position of center point 110, point 111, and point 112 on the virtual screen 142 are known from the mapping described above, so the corresponding positions in three-dimensional space can also be calculated. For example, in FIG. 7, it is assumed that the points on the virtual screen 142 where the center point 110, point 111, and point 112 are mapped are point 143, point 144, and point 145, respectively.
[0087]
Moreover, the length 130 of the radius of the horizontal cut edge of the three-dimensional face model 120 has already been set, as described above. Therefore, by determining the position of the horizontal cut edge using the following five conditions, the position and orientation of the three-dimensional face model 120 in three-dimensional virtual space can be obtained. The first condition is that the size of the horizontal cut edge passing through the center point 133 of the three-dimensional face model 120 is known. The second condition is that the position of the center point 133 of the horizontal cut edge is limited to a straight line passing through the camera focal point 140 and a point 143 in the three-dimensional virtual space. The third condition is that the circumference of the contour of the horizontal cut edge is tangent to a straight line passing through the camera focal point 140 and point 144 in the three-dimensional virtual space. The fourth condition, similar to the third condition, is that the circumference of the contour of the horizontal cut edge is tangent to a straight line passing through the camera focal point 140 and point 145 in the three-dimensional virtual space. The fifth condition is that the horizontal cut edge exists in the region $z > 0$. By complying with these five conditions, the position of the horizontal cut edge of the three-dimensional face model 120 can be obtained.
[0088]
FIG. 8 is a diagram for describing an example of specifying the position of the three-dimensional face model 120 as described above. As depicted in FIG. 8A, the horizontal cut edge of the aforementioned three-dimensional face model 120 exists on the plane formed by point 143, point 144, and point 145, so the three-dimensional face model position calculation processing unit 67 can easily specify the position.
[0089]
In this manner, the three-dimensional face model position calculation processing unit 67 calculates the three-dimensional positional relationship (distance) between the camcorder 1 and the three-dimensional face model 120 during photographing. The distance calculation process will be described below in detail with reference to the flowchart of FIG. 9.
[0090]

Returning to FIG. 5, when the distance calculation process is completed, the three-dimensional face model position calculation processing unit 67 advances to the process of step S26, and places the three-dimensional face model 120 in the three-dimensional virtual space based on the positional relationship between the camcorder 1 and the three-dimensional face model 120 calculated by the distance calculation process, and calculates and sets the lengths 131 and 132, which indicate the vertical size of the three-dimensional face model 120, in step S27. Specifically, when the three-dimensional face model 120 set in the three-dimensional virtual space is imaged on the virtual screen 142 as depicted in FIG. 8B, the three-dimensional face model position calculation processing unit 67 adjusts the values of length 131 and length 132 so as to match lengths 101 and 102, respectively, which correspond to the sizes of the upper and lower halves of the face in the face detection result.

[0091]

After completing the process of step S27, the three-dimensional face model position calculation processing unit 67 ends the three-dimensional face model position calculation process, and the process proceeds to step S5 in FIG. 3.

[0092]

The three-dimensional face model position is calculated in the aforementioned manner, so the three-dimensional face model position calculation processing unit 67 can easily determine the positional relationship between the camcorder 1 and the three-dimensional face model 120, and thereby the DSP 16 can easily and more accurately reduce or exaggerate image distortion.

[0093]

In addition, the three-dimensional face model position calculation processing unit 67 uses a three-dimensional face model shaped like a combination of the upper and lower halves of two types of ellipsoids, so the vertical lengths of the upper and lower halves of the three-dimensional face model can be set independent of each other, and thus a variety of face shapes can be accommodated, from a perfect sphere to an egg-like shape. In other words, the three-dimensional face model position calculation processing unit 67 can construct an optimal three-dimensional face model according to individual differences in the shape of the face of the photograph subject, and the DSP 16 can more accurately reduce or exaggerate distortion in the face image of various photograph subjects.

[0094]

In addition, the three-dimensional face model position calculation processing unit 67 supplies the virtual data calculated or set by the aforementioned processing, for example, information related to the three-dimensional face model and the three-dimensional virtual space, to the storage control unit 63 via the internal bus 62 during or after the aforementioned processing is completed, and stores the data in the virtual data storage unit 83 of the storage unit 64 to enable referencing by other processing units.

[0095]

Next, the distance calculation process executed in step S25 in FIG. 5 will be described in detail with reference to the flowchart in FIG. 9. If necessary, the description will be made with reference to FIG. 10.

[0096]

First, in step S41, the three-dimensional face model position calculation processing unit 67 calculates the position of the light focal point (hereinafter referred to as the camera focal point) in the photographing function (camera function) of the camcorder 1, or in other words, the angle of the origin in the three-dimensional virtual space with respect to the face image 100 mapped onto the virtual screen 142.

[0097]

FIG. 10 is a diagram for describing an example of calculating the distance of the three-dimensional face model. In FIG. 10, horizontal cut edge 150 is a horizontal cut edge that passes through the center point 133 of the aforementioned three-dimensional face model 120, and forms a circle with the point 133 as a center point. The horizontal cut edge 150 and the origin of the three-dimensional virtual space, which is the position of the camera focal point, have a positional relationship as depicted in FIG. 10. As described above, the width of the head of Japanese people varies little depending on height and sex and is considered to be a nearly constant size (about 15 to 16 cm), so the three-dimensional face model position calculation processing unit 67 sets this value as the radius 130 of the horizontal cut edge 150.

[0098]

Incidentally, in FIG. 10, the angle of view 152 of the camcorder 1 is denoted as r_{cam}, and the angle 153 of the horizontal cut edge 150 when viewed from the center of the camera is denoted as r_{face}. The camera angle of

view r_{cam} (angle of view 152) can be calculated from the camera settings, such as the focal length at the time of photographing. If the width 103 of the face image 100 in the photograph image 90 depicted in FIG. 4 is w_{face} and the width of the photograph image 90 is w_{img}, then the angle r_{face} 153 is calculated using the following equation (1).

[0099]

[Equation 1]

$$r_{face}=r_{cam}\times w_{face}/w_{img} \quad \cdots (1)$$

[0100]

Returning to FIG. 9, after calculating the angle relative to the face image at the camera focal position in the aforementioned manner, the three-dimensional face model position calculation processing unit 67 proceeds to step S42 and calculates the distance from the camera focal position to the center of the three-dimensional face model.

[0101]

In FIG. 10, if the distance 151 from the camera focal point (origin of the three-dimensional virtual space) 140 at the time of photographing of the face to the center point 143 of the three-dimensional face model is denoted as d_{org}, then d_{org} is calculated as depicted in the following equation (2) using the angle r_{face} 153 calculated by the aforementioned equation (1).

[0102]

[Equation 2]

$$d_{org}=s_{face}/\sin(r_{face}/2) \quad \cdots (2)$$

[0103]

Here, s_{face} represents the value of length 130, which is the radius of cut edge 150 of the face model.

[0104]

After calculating the distance from the camera focal position to the center of the three-dimensional face model as described above, the three-dimensional face model position calculation processing unit 67 ends the distance calculation process and the process advances to step S26 in FIG. 5.

[0105]

In this manner, the three-dimensional face model position calculation processing unit 67 can easily determine the positional relationship between the camcorder 1 and the three-dimensional face model 120, thereby enabling the DSP 16 to easily reduce or exaggerate image distortion more accurately.

[0106]

In the forgoing, in order to simplify the description, a case where the face image 100 depicted in FIG. 4 did not have a tilt angle 104 has been described. However, when the face image 100 has a tilt angle 104 with respect to the vertical direction of the photograph image 90, as in the case of FIG. 4, for example, the three-dimensional face model position calculation processing unit 67 can set the three-dimensional face model 120 to be tilted by the tilt angle 104 with respect to the y-axis of the three-dimensional virtual space. In this case, the vertical size of the three-dimensional face model calculated in step S27 is the size in the direction inclined by the tilt angle 104 with respect to the y-axis.

[0107]

Therefore, the DSP 16 can more accurately reduce or exaggerate image distortion even when the face is tilted relative to the photograph image.

[0108]

Next, the texture setting process executed in step S5 of FIG. 3 will be described in detail with reference to the flowchart of FIG. 11. The description will be made with reference to FIG. 12 to FIG. 14 as necessary.

[0109]

In the texture setting process, the texture setting processing unit 68 deletes unnecessary portions of the three-dimensional face model 120 and performs processing to set the texture for the model.

[0110]

First, the texture setting processing unit 68 accesses the storage control unit 63 via the internal bus 62 and acquires virtual data required for texture processing, such as information related to the three-dimensional face model and information related to the three-dimensional virtual space, which is stored in the virtual data storage unit 83 of the storage unit 64.

Having acquired this data, the texture setting processing unit 68 in step S61 identifies portions of the three-dimensional face model 120 that are required for subsequent image correction processing.

[0111]

FIG. 12 is a diagram for describing an example of setting the texture. FIG. 12A is a diagram of FIG. 7 viewed from another angle, depicting the state in which a three-dimensional face model is captured on the screen 142 with the origin of the three-dimensional virtual space as a reference. When the three-dimensional face model is imaged (hereinafter referred to as rendering) on the screen 142 in three-dimensional virtual space, a portion 160 that does not appear in the image of the three-dimensional face model is deleted from the three-dimensional face model as a result of the rendering, leaving the three-dimensional face model that becomes the imaged portion 161.

[0112]

In the image correction process described below, a process is performed in which the position of the camera focal point is virtually moved along the z axis in a direction away from the screen in order to reduce distortion in the face image. At this time, when the three-dimensional face model is rendered again, a portion of the portion 160 that was not depicted in the image in the initial state is depicted on the virtual screen 142. However, portion 160 is hidden when the user actually performs photography using the camera, and the texture of that portion is unclear, so in this case, the portion 160 should not be rendered. Therefore, as described above, in step S61, the portion 160 which is the unnecessary portion of the three-dimensional face model is deleted in advance from the three-dimensional face model.

[0113]

FIG. 13 is a diagram for describing a specific example of specifying the necessary portion of the three-dimensional face model. In FIG. 13, the position of the camera focal point is moved along the optical axis in the three-dimensional virtual space.

[0114]

As shown by equation (2), the camera focal point 140 located at the origin of the three-dimensional virtual space is at a distance 151 (d_{org}) from the center of the three-dimensional face model. As described below, the camera focal point 140 is virtually moved along the optical axis to obtain the final image. The amount of movement is determined by a value specified by the user. The distance 170 between the camera focal point and the center of the three-dimensional face model after movement is set as d_{new}.

[0115]

The angle between the edge of the portion of the horizontal cut edge 150 of the three-dimensional face model that is visible to the camera (camcorder 1) and the center 133 of the horizontal cut edge 150 is different before and after movement. The value of angle 171, that is half the angle between the horizontal cut edge 150 seen from the camera and the camera focal point 140A when the distance between the camera and the face is small, is set to α_{max}. The value α_{max} of the angle 171 can be obtained by the following equation (3).

[0116]

[Equation 3]

$$\alpha_{max} = \arccos(s_{face}/d_{min}) \quad \cdots (3)$$

However

$$d_{min} = \min(d_{org}, d_{new})$$

[0117]

In this manner, the texture setting processing unit 68 specifies the portions of the three-dimensional face model that are necessary for image correction processing. After completing the process of step S61, the texture setting processing unit 68 advances to the process of step S62. In step S62, the texture setting processing unit 68 deletes portions other than the necessary portions of the three-dimensional face model, or in other words, unnecessary portions from the three-dimensional face model depicted in FIG. 14.

In FIG. 14, portion 160 does not appear on the virtual screen 142, so this portion is deleted, and portion 161 remains as a three-dimensional face model to be used for image conversion processing.

[0118]

After completing the process of step S62, the texture setting processing unit 68 advances the process to step S63, where the texture is set for the remaining three-dimensional face models 161.

[0119]

FIG. 12B depicts how texture mapping is performed. First, the photograph image 90 depicted in FIG. 4 is mapped on the virtual screen 142. Next, as depicted in FIG. 12B, the photograph image 90 mapped onto the virtual screen 142 is associated with the three-dimensional face model 161 as a texture, using the camera focal point 140 as a reference.

[0120]

After setting the texture for the three-dimensional face model, the texture setting processing unit 68 terminates the texture setting process and the process advances to step S6 in FIG. 3.

[0121]

Note that the texture setting processing unit 68 supplies the virtual data calculated and set in the aforementioned processing, for example, information about the three-dimensional face model for which the texture has been set, to the storage control unit 63 via the internal bus 62 during or after the aforementioned processing is completed, and stores the data in the image data storage unit 81 or virtual data storage unit 83 of the storage unit 64 to enable referencing by other processing units.

[0122]

The texture is set on the three-dimensional face model as described above, so the texture setting processing unit 68 can easily set the texture. Furthermore, this also enables the DSP 16 to perform processing to correct image distortion using the three-dimensional face model for which the texture has been set, thereby enabling processing to more accurately reduce or exaggerate image distortion. Furthermore, the texture setting processing unit 68 deletes portions unnecessary for rendering the three-dimensional face model before setting the texture, so the DSP 16 can suppress the occurrence of errors due to unnecessary processing, such as rendering the three-dimensional face model without texture setting, and can more accurately perform processing to reduce or exaggerate image distortion.

[0123]

Note that in the forgoing, in order to simplify the description, the case where the face image 100 depicted in FIG. 4 does not have a tilt angle 104 was described. However, when the face image 100 has a tilt angle 104 with respect to the vertical direction of the photograph image 90, as in the case of FIG. 4, the texture setting processing unit 68 can execute the aforementioned processes using an x' axis obtained by tilting the x axis of the three-dimensional virtual space by the tilt angle 104 on the xy plane, and a y' axis obtained by tilting the y axis by the tilt angle 104. In this case, the virtual screen 142 depicted in FIG. 12 is a quadrilateral with each side parallel to the x-axis direction or the y-axis direction, as in the case described above, and is inclined in the opposite direction by the tilt angle 104 with respect to the three-dimensional face model on the xy plane.

[0124]

Next, the corrected image creation process executed in step S6 in FIG. 3 will be described in detail with reference to the flowchart in FIG. 15. If necessary, the description will be made with reference to FIG. 16 and FIG. 17.

[0125]

First, the corrected image creation processing unit 69 accesses the storage control unit 63 via the internal bus 62 and acquires virtual data required for the corrected image creation process, such as information about the three-dimensional face model and information about the three-dimensional virtual space, which is stored in the virtual data storage unit 83 of the storage unit 64. After acquiring the data, the corrected image creation processing unit 69 moves the position of the camera focal point in the z-axis direction of the three-dimensional virtual space, in other words, in the optical axis direction of the camera of the camcorder 1, in step S81. In step S2 of FIG. 3, the corrected image creation processing unit 69 determines the distance between the three-dimensional face model and the camera focal point, based on the setting values acquired by the setting value acquisition unit 65 and stored in the setting value storage unit 82 of the storage unit 64, and moves the position of the camera focal point along the z-axis of the three-dimensional coordinates in the three-dimensional virtual space.

[0126]
After moving the camera focal point in the z-axis direction, the corrected image creation processing unit 69 determines in step S82 whether the center of the three-dimensional face model is on the optical axis (z-axis), or in other words, at the center of the virtual screen 142. If it is determined that the center of the three-dimensional face model is on the optical axis, even if the camera focal point is moved, the center of the face image 100 corresponding to the three-dimensional face model rendered on the virtual screen 142 will be on the optical axis (the position of the center point 110 of the face image 100 does not change on the virtual screen 142). In other words, in this case, before and after moving the camera focal point, the face image 100 corresponding to the three-dimensional face model rendered on the virtual screen 142 only changes in size, and the position and shape of the contour of the face image 100 on the virtual screen 142 do not change. Therefore, in this case, the corrected image creation processing unit 69 advances the process to step S83, executes rendering processing, and synthesizes the three-dimensional face model on the virtual screen 142 to form a final image (an image in which the face image has been corrected). The rendering process will be described below in detail with reference to the flowchart of FIG. 18.
[0127]
When the rendering process is completed, the corrected image creation processing unit 69 advances the process to step S84, and determines whether or not the size of the face image relative to the size of the virtual screen matches before and after the correction. When the camera focal point is moved along the z-axis and then the three-dimensional face model 161 is rendered on the virtual screen 142 with the same angle of view as before movement, the size of the face image corresponding to the three-dimensional face model 161 in the resulting image as a result of the rendering will differ from the size of the face image 100 before the camera focal point was moved.
[0128]
In this manner, if it is determined that the size of the face image relative to the size of the virtual screen does not match before and after correction, the corrected image creation processing unit 69 advances to the process of step S85, where the size of the virtual screen 142 is adjusted. The corrected image creation processing unit 69 adjusts the angle of view of the camera (camcorder 1) during rendering (or in other words, adjusts the size of the virtual screen 142) so that the size of the final rendering result of the three-dimensional face model 161 is equivalent to the size of the face image 100 depicted in FIG. 4. In other words, the corrected image creation processing unit 69 leaves the size of the face image unchanged and adjusts only the size of the virtual screen 142, so the size of the face image relative to the size of the virtual screen 142 is the same before and after moving the position of the camera focal point.
[0129]
FIG. 16 is a diagram depicting an example of adjusting the virtual screen size. In FIG. 16, a case will be described in which the position of the camera focal point 140 moves from the position of the origin to the position of point 180 on the z-axis. Note that the horizontal length (the vertical direction in the figure) of the virtual screen 142 before the camera focal point is moved is defined as length 190. The aspect ratio of the virtual screen 142 is predetermined (the same as the aspect ratio of the CCD 13), so the size of the virtual screen 142 will be described here using the horizontal length.
[0130]
In FIG. 16, if the position of the camera focal point moves, the size of the face image corresponding to the three-dimensional face model 161 formed on the virtual screen 142 changes. For example, as depicted in FIG. 16, if the position and size of the virtual screen 142 are fixed and the position of the camera focal point is moved to a position farther from the origin relative to the three-dimensional virtual model 161, the size of the contour of the face image on the virtual screen 142 corresponding to the three-dimensional face model 161 will be larger compared to the face image before movement. In response, the corrected image creation processing unit 69 changes the size of the virtual screen 142 so that the size of the contour of the face image before movement of the camera focal point position matches the size of the contour of the face image after movement (in order for the ratio of the face image to the virtual screen 142 to match before and after movement). In the example of FIG. 16, the horizontal length of the virtual screen 142 (size of the virtual screen 142) is changed to a length 191 which is larger than the length 190.
Therefore, if the size of the photograph image on the virtual screen 142 is consistent before and after movement of the camera focal point, the size of the face image will be consistent.

[0131]
Note that if the center 110 of the face image 100 is on the optical axis of the camera, the contour shape of the face image on the virtual screen 142 corresponding to the three-dimensional face model 161 will be similar before and after movement of the camera focal point, so the corrected image creation processing unit 69 can perfectly match the contour of the face image by adjusting the size of the virtual screen 142. As described below, if the center 133 of the three-dimensional face model 120 is not on the optical axis of the camera, the contour shape of the face image on the virtual screen 142 corresponding to the three-dimensional face model 161 will not be similar before and after movement of the camera center, and therefore the corrected image creation processing unit 69 cannot completely match the contour of the face image even if the size of the virtual screen 142 is adjusted.
[0132]
After completing the process of step S85 as described above, the corrected image creation processing unit 69 returns to the process of step S83 and repeats subsequent processes.
[0133]
As described above, the size of the virtual screen 142 is adjusted, and if it is determined in step S84 that the size of the face image is the same before and after correction, the corrected image creation processing unit 69 supplies the obtained corrected image to the storage control unit 63 via the internal bus 62, causes the image to be stored in the image data storage unit 81 of the storage unit 64, terminates the corrected image creation process, and proceeds to step S7 in FIG. 3.
[0134]
Furthermore, if it is determined in step S82 that the face image 100 is offset from the center of the virtual screen 142 and the center of the three-dimensional face model is not on the optical axis, the corrected image creation processing unit 69 advances the process to step S86, executes a rendering process similar to that in step S83, and synthesizes the three-dimensional facial model on the virtual screen 142 to form a final image (an image in which the face image has been corrected).
[0135]
When the rendering process is completed, the corrected image creation processing unit 69 advances the process to step S87, and determines whether or not the positions of the face image on the virtual screen before and after correction are the same. If the center of the three-dimensional face model is not on the optical axis, if the camera focal point is moved along the z-axis and then the three-dimensional face model 161 is rendered on the virtual screen 142 with the same angle of view as before moving, the position of the face image corresponding to the three-dimensional face model 161 in the resulting image as a result of rendering will differ from the position of the face image 100 before the camera focal point was moved.
[0136]
In this manner, if it is determined that the positions of the face image on the virtual screen before and after correction do not match, the corrected image creation processing unit 69 proceeds to step S88 and moves the position of the camera focal point on the xy plane of the three-dimensional coordinates in the virtual three-dimensional space, as depicted in FIG. 17.
[0137]
In FIG. 17, a face image 201 is an image obtained by rendering a three-dimensional face model 202 on the virtual screen 142. At this time, the center of the three-dimensional face model 202 is not on the optical axis (z-axis), so when the position of the camera focal point is moved along the z-axis direction, the position of the image obtained by rendering the three-dimensional face model 202 on the virtual screen 142 will be shifted from the position of the face image 201.
[0138]
Therefore, the corrected image creation processing unit 69 moves the position of the camera focal point to a point 180 that is not on the z-axis, so the center positions of the face images before and after correction coincide. Therefore, point 180, point 140, the center of image 201, and the center of the three-dimensional face model 202 are connected by a single straight line, and the position of the center of the corrected face image coincides with the position of the center of the face image before correction.

[0139]
Returning to FIG. 15, after completing the process of step S88, the corrected image creation processing unit 69 returns the process to step S86 and repeats the subsequent processes.
[0140]
Therefore, the position of the camera focal point is corrected and the like, and if it is determined in step S87 that the center positions of the face images before and after correction are the same, the corrected image creation processing unit 69 proceeds to step S89, and a determination is made as to whether the contour of the face image after correction contains the contour of the face image before correction and is the smallest possible.
[0141]
As described above, when the position of the camera focal point moves, the size of the face image corresponding to the three-dimensional face model 161 formed on the virtual screen 142 changes. At this time, unlike the case where the center of the three-dimensional face model is on the optical axis of the camera, if the center of the three-dimensional face model is not on the optical axis of the camera, the shape of the contour of the face image on the virtual screen 142 corresponding to the three-dimensional face model will not be similar before and after movement of the camera center, so even if the corrected image creation processing unit 69 adjusts the size of the virtual screen 142, the contours of the face images cannot perfectly match.
[0142]
Therefore, if the center of the three-dimensional face model is not on the optical axis of the camera, the corrected image creation processing unit 69 determines if the contour of the corrected face image contains the contour of the face image before correction and is the smallest possible, and if it is determined that the contour of the face image after correction does not contain the contour of the face image before correction, or that the contour of the face image before correction is contained but the area is not the smallest possible, the process proceeds to step S90, and the size of the virtual screen 142 is changed so that the contour of the face image corresponding to the three-dimensional face model after the camera focal point has been moved is the smallest size that completely covers and conceals the contour of the face image corresponding to the three-dimensional face model before the camera focal point has been moved.
[0143]
Therefore, after adjusting the size of the virtual screen 142, the corrected image creation processing unit 69 returns the process to step S86, repeats the subsequent processes, and repeats the rendering process of the three-dimensional face model on the virtual screen 142 with the newly set size.
[0144]
After adjusting the size of the virtual screen 142 as described above, if it is determined in step S89 that the contour of the corrected face image contains the contour of the face image before correction and is the smallest possible size, the corrected image creation processing unit 69 terminates the corrected image creation process and proceeds to step S7 in FIG. 3.
[0145]
In this manner, the corrected image creation processing unit 69 creates a corrected image in which the degree of distortion of the face image has been adjusted, so the DSP 16 can more accurately perform processing to reduce or exaggerate image distortion. Furthermore, this enables the camcorder 1 to provide a corrected image, in which image distortion has been more accurately reduced or exaggerated to a user by storing the corrected image on a storage medium and displaying the image on a display, and the like.
[0146]
Note that the corrected image creation processing unit 69 appropriately adjusts the size of the virtual screen 142 that renders the three-dimensional virtual model according to the degree of correction (distance the camera focal point is moved) specified by the user or the like, so processing can be performed to more accurately reduce or exaggerate image distortion. In addition, at that time, the corrected image creation processing unit 69 adjusts the size of the virtual screen 142 by an optimal method according to the position of the center of the three-dimensional face model (position of the center of the face image in the photograph image). Therefore, even if, for example, the face of the photograph subject is not at the center of the image, processing can be performed to more accurately reduce or exaggerate the image distortion.
[0147]

In the above, in order to simplify the description, the case where the face image 100 does not have a tilt angle 104 as depicted in FIG. 4 has been described. However, when the face image 100 does have a tilt angle 104 with respect to the vertical direction of the photograph image 90, as in the case of FIG. 4, the corrected image creation processing unit 69 performs the aforementioned processes at an x' axis obtained by tilting the x axis of the three-dimensional virtual space by the tilt angle 104 on the xy plane, and a y' axis obtained by tilting the y axis by the tilt angle 104.

In this case, the virtual screen 142 is a quadrilateral with each side parallel to the x-axis direction or the y-axis direction, as in the case described above, and is inclined in the opposite direction by the tilt angle 104 with respect to the three-dimensional face model on the xy plane.

[0148]

Next, the rendering process executed in steps S83 and S86 in FIG. 15 will be described in detail with reference to the flowchart in FIG. 18. If necessary, the description will be made with reference to FIG. 19 to FIG. 22.

[0149]

The corrected image creation processing unit 69, which has started the rendering process, first determines a representative point of the three-dimensional face model to be rendered in step S111. When rendering a three-dimensional face model, the corrected image creation processing unit 69 may perform similar correction processing for all points that make up the surface to which the texture of the three-dimensional face model is set, but in that case, the amount of calculations will be enormous, and the processing load will increase. Therefore, in order to reduce the load, it is desirable for the corrected image creation processing unit 69 to select several representative points from among the points that form the surface on which the texture of the three-dimensional face model is set, perform correction processing on those representative points, and correct the other points based on the correction of those representative points.

[0150]

FIG. 19 is a diagram for describing an example of determining a representative point and calculating the coordinates. The distance 216 between the camera focal point 140 and the virtual screen 215 is designated as d_{focus}. Here, the intersection 212 between the virtual screen 215 and the optical axis of the camera is defined as point C, point 172 where the angle 171 is α_{max} obtained by equation 3 is defined as point A, and point 213 where point 172 is projected onto the virtual screen 215 is defined as point A'. Furthermore, point 211 on the horizontal cut edge 150 is designated as point B, and point 214 at which point B (point 211) is projected onto the virtual screen 215 is designated as point B'. The angle 210 formed between the line connecting point B (point 211) and the center 133 of the horizontal cut edge 150 and the optical axis of the camera is set to α ($a \leqq \alpha_{max}$).

[0151]

Here, the distance between the center point 133 of the horizontal cut edge 150 and the camera focal point 140 is d, and d can be any value equal to or greater than d_{min}. Now, assuming that the distance between point C (point 212) and point B' (point 214) is x, x can be calculated by the following equation (4).

[0152]

[Equation 4]

$$x = d_{focus} \times s_{face} \times \sin\alpha / (d - s_{face} \times \cos\alpha) \quad \cdots (4)$$

[0153]

Furthermore, if the distance between point C (point 212) and point A' (point 213) is assumed to be x_{max}, then x_{max} can also be calculated by the aforementioned formula (4). Now, if the ratio of x to x_{max} is denoted by k, $k = x/x_{max}$ can be obtained by the following equation (5).

[0154]

[Equation 5]

$$k = x/x_{max} = \sin\alpha \times (d - s_{face} \times \cos\alpha_{max}) / \{\sin\alpha_{max} \times (d - s_{face} \times \cos\alpha)\} \quad \cdots (5)$$

[0155]

Although α can be any value between 0 and α_{max}, the corrected image creation processing unit 69 selects n points thereof as representative points. α_i is defined by the following equation 6 as follows.

[0156]

[Equation 6]

$$\alpha_i = i \times \alpha_{max} / (n-1) \quad \cdots (6)$$

However

$$i = 0, \cdots, n-1$$

[0157]

For each of the cases $d = d_{org}$ and $d = d_{new}$, k is calculated for i = 0,..., n - 1. Note that when $d = d_{org}$ and i = j, k is denoted as k_{org}^j, and when $d = d_{new}$ and i = j, k is denoted as k_{new}^j. These values represent the positions on the virtual screen 142 to which points on the face model are projected when the distance between the camera focal point and the three-dimensional face model is d_{org} or d_{new}. Therefore, by plotting these values at the position of the face image in the photograph image, the corresponding relationship between the image before and after correction can be determined. In other words, by plotting points starting from the center 110 of the face image in FIG. 4 and moving outward in accordance with the size of the face using the value of k, it is possible to see how the image should be changed before and after correction.

[0158]

After completing the processing of step S111, the corrected image creation processing unit 69 then proceeds to step S112, where the pre-correction coordinates of each representative point determined in step S111 are calculated, and in step S113, the corrected coordinates of each representative point determined in step S111 are calculated.

[0159]

FIG. 20 is a diagram for describing an example of calculating the coordinates of the representative points. It can be assumed that the ellipse 220 is a face image detected by face detection processing. In a coordinate system in which the center of the face image is the origin, the x-axis runs horizontally in the face image, and the y-axis runs vertically in the face image, the length of the axis of the ellipse 220 in the x-axis direction is set to a, and the length of the axis in the y-axis direction is set to b. When an angle 221 formed by a vector connecting the origin and a point 222 on the ellipse 220 and the x-axis is θ, the coordinates of point 222 are ($a \times \cos\theta$, $b \times \sin\theta$).

[0160]

Point 222 represents the edge of the three-dimensional face model and is at a position corresponding to x_{max}. In other words, by plotting points using k_{org}^i and k_{new}^i on the line connecting the origin and point 222 on the ellipse 220 as ($k_{org}^i \times a \times \cos\theta$, $k_{org}^i \times b \times \sin\theta$) and ($k_{new}^i \times a \times \cos\theta$, $k_{new}^i \times b \times \sin\theta$), it becomes possible to see how the representative point selected on the three-dimensional face model changes before and after correction. In other words, in steps S112 and S113, the corrected image creation processing unit 69 calculates the coordinates of the representative point before and after correction in the aforementioned manner.

[0161]

Incidentally, the angle θ is defined as θ_j for j = 0,..., m − 1 as shown in the following equation (7).

[0162]

[Equation 7]

$$\theta_j = j \times (\pi/2) / (m-1) \quad \cdots (7)$$

[0163]

By applying equation (7), the corrected image creation processing unit 69 determines the representative point before correction ($k_{org}^i \times a \times \cos\theta_j$, $k_{org}^i \times b \times \sin\theta_j$) (hereinafter referred to as $P_{org}^{i,j}$) and the representative point after correction ($k_{new}^i \times a \times \cos\theta_j$, $k_{new}^i \times b \times \sin\theta_j$) (hereinafter referred to as $P_{new}^{i,j}$) for the first quadrant of FIG. 20.

[0164]

After calculating the coordinates of the representative point for the first quadrant, the corrected image creation processing unit 69 also calculates the coordinates of the representative points for the second to fourth quadrants by utilizing the symmetric relationship with the position of the representative point in the first quadrant as a reference. By using the symmetric relationship of the representative points in this manner, the corrected image creation processing unit 69 can more easily calculate the coordinates of each representative point than if the coordinates of all the representative points in the first through fourth quadrants were calculated in the same manner.

[0165]
The coordinates of the representative points having coordinates calculated as described above change before and after correction, as depicted in FIG. 21.
[0166]
As depicted in FIG. 21A, in the face image 231 contained in photograph image 230 before correction, representative points that are biased toward the outside of the face image 231 such as black dots are moved by the correction process as depicted in FIG. 21B, and are evenly positioned throughout the face image 241, in the face image 241 contained in the photograph image 240 after correction.
[0167]
Although an example of the arrangement of representative points has been described in FIG. 21, the arrangement relationship of each representative point may of course be other than as depicted in FIG. 21, and the number of representative points may of course be other than as depicted in FIG. 21. Furthermore, in the forgoing, two spheres having axes of different lengths b are used for the upper and lower halves of the face as a three-dimensional face model, and the three-dimensional face model is constructed by combining these spheres. In this case, the corrected image creation processing unit 69 appropriately changes the value of the length b to obtain the position of the representative points. Furthermore, if the coordinate system defined around the face image as depicted in FIG. 20 is misaligned with the coordinate system of the photograph image as depicted in FIG. 4, the corrected image creation processing unit 69 performs rotation and parallel movement conversion on all representative points whose coordinates have been determined.
[0168]
Returning to FIG. 18, the corrected image creation processing unit 69 performs the processes of steps S112 and S113 to calculate the coordinates of the representative points before and after correction, and confirms the change in coordinates of the representative points due to the correction, and in step S114, selects one unprocessed polygon from among the polygons formed by the representative points whose coordinates have been calculated, and performs image conversion using that polygon. Once the image conversion for that polygon is completed, in step S115, a determination is made as to whether all polygons have been processed, and if it is determined that unprocessed polygons exist, the process returns to step S114, and the subsequent processes are repeated to perform image conversion for all of the polygons in the same manner. If it is determined in step S115 that all of the polygons have been processed, the corrected image creation processing unit 69 terminates the rendering process, and returns the process to step S84 or step S87 in FIG. 15.
[0169]
In other words, the corrected image creation processing unit 69 focuses on each polygon formed from the representative points whose coordinates have been calculated, and performs correction of the image. The process in steps S112 and S113 calculate the coordinates of all representative points before and after correction, so polygons formed by representative points on the image before and after correction are obtained for all pairs of i = 0,..., N - 2 and j = 0,..., m - 2. The corrected image creation processing unit 69 performs image conversion corresponding to the two polygons thus obtained, namely polygon ($P_{org}^{i,j}$, $P_{org}^{i+1,j}$, $P_{org}^{i+1,j+1}$, $P_{org}^{i,j+1}$) and polygon ($P_{new}^{i,j}$, $P_{new}^{i+1,j}$, $P_{new}^{i+1,j+1}$, $P_{new}^{i,j+1}$). As a result, after image correction, all pixels inside the polygon ($P_{new}^{i,j}$, $P_{new}^{i+1,j}$, $P_{new}^{i+1,j+1}$, $P_{new}^{i,j+1}$) will have a pre-corrected image mapped inside the polygon ($P_{org}^{i,j}$, $P_{org}^{i+1,j}$, $P_{org}^{i+1,j+1}$, $P_{org}^{i,j+1}$). The position of each pixel before and after correction can be determined by linearly interpolating each vertex of the polygon.
[0170]
FIG. 22 is a diagram for describing an example of linear interpolation during image conversion within a polygon. In FIG. 22, point 250 (hereinafter referred to as point P1), point 251 (hereinafter referred to as point P2), point 252 (hereinafter referred to as point P3), and point 253 (hereinafter referred to as point P4) are representative points after correction, and in the image before correction, points P1', P2', P3', and P4' are the corresponding representative points, respectively.

[0171]
In FIG. 22, when calculating the pre-correction position of pixel 254 (hereinafter referred to as point P) inside a triangle formed by points P1, P2, and P3, the corrected image creation processing unit 69 expresses the coordinates of point 255 (hereinafter referred to as point P5) where a straight line passing through point P and parallel to the x-axis intersects with a line segment P1P2 having points P1 and P2 as endpoints, as depicted in FIG. 22, as s × P2 + (1 - s) × P1. Note that in this formula, "P1" indicates the coordinates of point P1 (point 250), and "P2" indicates the coordinates of point P2 (point 251).
[0172]
Furthermore, as depicted in FIG. 22, the corrected image creation processing unit 69 expresses the coordinates of point 256 (hereinafter referred to as point P6) where a straight line passing through point P and parallel to the x-axis intersects with a line segment P1P3 having points P1 and P3 as endpoints, as t × P3 + (1 − t) × P1. Note that in the formula, "P1" indicates the coordinates of point P1 (point 250), and "P3" indicates the coordinates of point P3 (point 252).
[0173]
Furthermore, if it is assumed that P = u × P6 + (1 − u) × P5 holds for point P, the corrected image creation processing unit 69 expresses point P as indicated in the following equation (8).
[0174]
[Equation 8]

$$P=uP_6+(1-u)P_5=u(tP_3+(1-t)P_1)+(1-u)(sP_2+(1-s)P_1) \quad \cdots (8)$$

[0175]
The corrected image creation processing unit 69 calculates the variables s, t, and u from the positional relationships between the points. Furthermore, similar to equation (8), the corrected image creation processing unit 69 calculates the position P', prior to image correction, of point P on the corrected image using the following equation (9).
[0176]
[Equation 9]

$$P'=u(tP_3'+(1-t)P_1')+(1-u)(sP_2'+(1-s)P_1') \quad \cdots (9)$$

[0177]
Based on the aforementioned relationship, the corrected image creation processing unit 69 performs image conversion by substituting the pixel value at the position of point P' before image correction with point P after image correction. However, the coordinate value of point P' calculated using equation (9) is not necessarily an integer (or in other words, there is not necessarily a pixel in the pre-corrected image that corresponds to each pixel in the corrected image), so the corrected image creation processing unit 69 uses an image interpolation method such as the Nearest Neighbor method or the bi-linear method, or the like, when calculating pixel values.
[0178]
The corrected image creation processing unit 69 sequentially applies the aforementioned image conversion processing to all polygons connecting the points determined as representative points, and obtains a final corrected image by performing the aforementioned image conversion on all pixels inside each polygon.
[0179]
In this manner, the corrected image creation processing unit 69 uses the representative points to perform rendering processing of the three-dimensional virtual model, so rendering of the three-dimensional face model can be easily performed, and this enables the DSP 16 to more accurately perform processing to reduce or exaggerate image distortion. Furthermore, this enables the camcorder 1 to provide a corrected image, in which image distortion has been more accurately reduced or exaggerated to a user by storing the corrected image on a storage medium and displaying the image on a display, and the like.
[0180]
FIG. 23 is a diagram for describing an example of image conversion to which the present invention is applied. In FIG. 23A, a photograph image 261 is a photograph image before correction.

In FIG. 23B, photograph image 262 is a composite image obtained by applying image conversion processing to photograph image 261 in FIG. 23A using the present invention, and virtually moving the camera focal point farther away from the photograph subject than when actually photographing the image.

[0181]

In the photograph image 261 depicted in FIG. 23A, the sense of depth of the face of the photograph subject photographed close-up is exaggerated, and compared to the photograph image 262 depicted in FIG. 23B, the image appears unnatural in that the center of the face of the photograph subject (or in other words, the center of the photograph image 261) is enlarged. In contrast, in the photograph image 262 depicted in FIG. 23B, unnaturalness caused by exaggerating the perspective is reduced compared to the photograph image 261 (original image before correction) depicted in FIG. 23A.

[0182]

In FIG. 23C, photograph image 263 is a composite image obtained by applying image conversion processing to photograph image 261 in FIG. 23A using the present invention, and virtually moving the camera focal point closer to the photograph subject than when actually photographing. The photograph image 263 depicted in FIG. 23C is an image in which the distortion due to the perspective depicted in the photograph image 261 (original image before correction) is further exaggerated.

[0183]

In this manner, the camcorder 1 to which the present invention is applied can correct the image to eliminate distortion by performing image conversion processing by applying the present invention, or conversely, can apply special effects to the image, such as intentionally distorting the face of the photograph subject to create an entertaining look, thereby increasing the entertainment value of the image.

[0184]

The forgoing describes the case where image correction processing is performed on a photograph image by the camcorder 1 depicted in FIG. 1, but the present invention is not limited to this case, and may of course also be applied to smaller mobile devices such as a digital mobile phone with a camera or a PDA. However, in the case of such a small mobile device, the computing power of the CPU, DSP, and the like may be lower than that of the camcorder 1. In such cases, it is desirable to limit the conditions for image correction or to prepare and use tables or the like in advance, thereby eliminating calculations that impose a heavy processing load from among the calculation processes described above, thereby enabling the image correction process to be executed quickly.

[0185]

An example of the application of the present invention to such a mobile device with low computational power will be described below.

[0186]

FIG. 24 is a diagram depicting an example of the configuration of a digital mobile phone with a camera that applies the present invention.

[0187]

As depicted in FIG. 24, the digital mobile phone with a camera 300 includes a power supply circuit unit 351, an operation input control unit 352, an image encoder 353, a camera interface unit 354, an LCD control unit 355, an image decoder 356, a multiplexing and demultiplexing unit 357, a recording and playback unit 362, a modulation and demodulation circuit unit 358 and an audio codec 359 which are mutually connected to a main control unit 350 which is adapted to comprehensively control each unit via a bus 360.

[0188]

When the end call and power key are turned on by the user, the power supply circuit unit 351 supplies power to each unit from a battery pack (not depicted) to startup the digital mobile phone with a camera 300 in an operable state.

[0189]

Under control of the main control unit 350 including a CPU, ROM, RAM, and the like, the digital mobile phone with a camera 300 converts an audio signal collected by a microphone 321 in voice call mode into digital audio data using an audio codec 359, which then undergoes spectrum spread processing in the modulation and demodulation circuit unit 358, digital-to-analog conversion processing and frequency conversion processing in a transmitting and receiving circuit unit 362, and is transmitted via an antenna 314.

[0190]
In addition, in the voice call mode, the digital mobile phone with a camera 300 amplifies the signal received by the antenna 314, performs frequency conversion processing and analog-to-digital conversion processing, performs spectrum despreading processing in the modulation and demodulation circuit unit 358, converts the signal into an analog voice signal by the voice codec 359, and outputs the signal via the speaker 317.
[0191]
Furthermore, when the digital mobile phone with a camera 300 is in data communication mode for sending an e-mail, the text data of the e-mail entered by operating the operation keys 319 and jog dial 322 is sent to the main control unit 350 via the operation input control unit 352.
[0192]
The main control unit 350 performs spectrum spreading processing on the text data in the modulation and demodulation circuit unit 358, performs digital-to-analog conversion processing and frequency conversion processing on the text data in the transmitting and receiving circuit unit 362, and then transmits the data via the antenna 314 to a base station (not depicted).
[0193]
On the other hand, when the digital mobile phone with a camera 300 receives an e-mail in the data communication mode, a signal received from a base station (not depicted) via the antenna 314 is subjected to spectrum despreading in the modulation and demodulation circuit unit 358 to restore the original text data, and then the data is displayed as an e-mail on the liquid crystal display 318 via the LCD control unit 355.
[0194]
Next, the digital mobile phone with a camera 300 can record the received e-mail in a memory stick 323 via the recording and reproducing unit 362 in response to a user operation.
[0195]
Furthermore, a DSP 371 which performs digital processing such as image correction processing for reducing or exaggerating image distortion on supplied image data is connected to the bus 360 of the digital mobile phone with a camera 300. The internal configuration of the DSP 371 is similar to that of the camcorder 1 described with reference to FIG. 2, and since FIG. 2 can be applied, a description thereof will be omitted.
[0196]
When the digital mobile phone with a camera 300 transmits image data in data communication mode, the image data captured by the CCD camera 316 is supplied to the DSP 371 via the camera interface unit (camera I/F unit) 354, and after digital processing is performed on the image data, the image data is supplied to the image encoder 353.
[0197]
Incidentally, if the digital mobile phone with a camera 300 is not transmitting image data, the image data photographed by the CCD camera 316 can be displayed on the liquid crystal display 318 via the camera interface unit 354, DSP 371, and LCD control unit 355 (supplying the image data to the LCD control unit 355 without passing through the image encoder 353, and displaying an image corresponding to the image data on the liquid crystal display).
[0198]
The image encoder 353 converts the image data supplied from the CCD camera 316 into encoded image data by compression-coding using a predetermined coding method such as MPEG (Moving Picture Experts Group) 2 or MPEG 4, and transmits this data to the multiplexing and demultiplexing unit 357.
[0199]
At the same time, the digital mobile phone with a camera 300 transmits the voice picked up by the microphone 321 while the CCD camera 316 is photographing to the multiplexing and demultiplexing unit 357 via the voice codec 359 as digital voice data.
[0200]
The multiplexing and demultiplexing unit 357 multiplexes the encoded image data supplied from the image encoder 353 and the audio data supplied from the audio codec 359 in a predetermined manner, and the resulting multiplexed data is subjected to spectrum spreading in the modulation and demodulation circuit unit 358, and then transmitted via the antenna 314 after undergoing digital-to-analog conversion processing and frequency conversion processing in the transmitting and receiving circuit unit 362.

[0201]
On the other hand, when the digital mobile phone with a camera 300 is in the data communication mode and is receiving, for example, data of a moving image file linked to a simple homepage or the like, the signal received from a base station (not depicted) via the antenna 314 is subjected to spectrum despreading in the modulation and demodulation circuit unit 358, and the resulting multiplexed data is sent to the multiplexing and demultiplexing unit 357.
[0202]
The multiplexing and demultiplexing unit 357 demultiplexes the multiplexed data into encoded image data and audio data, and supplies the encoded image data to the image decoder 356 and the audio data to the audio codec 359 via the bus 360.
[0203]
The image decoder 356 generates reproduced moving image data by decoding the coded image data using a decoding method corresponding to the predetermined coding method such as MPEG2 or MPEG4, and supplies this data to the liquid crystal display 318 via the LCD control unit 355, in order to display moving image data, for example, contained in a moving image file linked to a simple homepage.
[0204]
At the same time, the audio codec 359 converts the audio data into an analog audio signal and then supplies the signal to the speaker 317, whereby, for example, audio data contained in the moving image file linked to the simple homepage is reproduced.
[0205]
In this case, as in the case of an e-mail, the digital mobile phone with a camera 300 can record data linked to the received simple homepage or the like onto the memory stick 323 via the recording and playback unit 362 by an operation of the user.
[0206]
In addition to this configuration, in the digital mobile phone with a camera 300, a program (FIG. 3) for performing image correction processing similar to that of the first embodiment is stored in the ROM of the main control unit 350 or the DSP 371, and based on this program, the DSP 371 is able to perform processing for reducing or exaggerating image distortion.
[0207]
In the digital mobile phone with a camera 300 as described above, the DSP 371 basically performs processing to reduce or exaggerate image distortion in the same manner as the DSP 16 of the camcorder 1 described above.
[0208]
However, DSP 371 often has lower processing power than DSP 16, and in order to reduce the load of image correction processing, image correction processing is performed under the assumption that the position of the center of the face in the image coincides with the position of the optical axis of the CCD camera 316.
[0209]
The actual position of the optical axis is located at the center of the image, but in the case of a digital mobile phone with a camera 300, the imaging performance, such as the resolution of the CCD camera 316, is often lower than that of the camcorder 1 in FIG. 1, and the image quality obtained by photographing is often lower than that of the camcorder 1 in FIG. 1. Therefore, when capturing images using such a digital mobile phone with a camera 300, the user will often capture the photograph subject from a closer distance so as to include the photograph subject across the entire photographing range (so that the photograph subject is photographed across the entire image), and in photograph images obtained in such an environment, the face of the photograph subject will often be large and occupy the entire image, and the center of the face will usually be located approximately in the center of the image. Therefore, the DSP 371 performs image correction processing according to the assumptions described above. This allows the DSP 371 to reduce the load of image correction processing, and facilitates processing to reduce or exaggerate image distortion.
[0210]
Note that as in the case of the camcorder 1, the DSP 371 uses a three-dimensional face model representing the face of the photograph subject, which has a shape formed by combining two ellipsoids as depicted in FIG. 6.

[0211]
Furthermore, in the DSP 371 with low calculation processing power, calculations using sin and cos such as the aforementioned formulas (5) and (6), which impose a large processing load, may become a bottleneck. Therefore, the DSP 371 does not perform calculations of functions such as sin and cos, but prepares calculation results in advance as a table, and by referring to this table, calculation processing can be eliminated while providing equivalent calculation results. The DSP 371 can achieve high speed image correction processing by creating a table of the results of these complex calculations. Furthermore, the DSP 371 can achieve even greater speed by calculating in advance the value of variable k obtained by the calculation of equation (5) to create a table, and then using the table to approximate the calculation results of equation (5).
[0212]
Furthermore, the DSP 371 can achieve high speed processing by tabulating the results of calculations using functions of sine and cosine in equation (7), in the same manner as described above.
[0213]
As described above, the DSP 371 performs image correction processing at higher speeds by using tables and limiting the processing conditions, so a digital mobile phone with a camera 300 to which the present invention is applied can more accurately perform processing to reduce or exaggerate image distortion.
[0214]
With the aforementioned digital mobile phone with a camera 300, the present invention can also be applied to information processing devices having functions other than the photographing function. Therefore, the aforementioned camcorder 1 or digital mobile phone with a camera 300 may of course be provided with functions other than those described above. Conversely, the present invention can be applied to any information processing device having an image processing function, and can therefore also be applied to image processing devices such as personal computers that do not have a photographing function.
[0215]
FIG. 25 is a diagram depicting an example of the configuration of a personal computer to which the present invention is applied.
[0216]
In FIG. 25, a CPU 401 of a personal computer 400 executes various processes according to a program stored in ROM 402 or a program loaded from a storage unit 413 to RAM 403. The RAM 403 also stores data necessary for the CPU 401 to execute the various processes as appropriate.
[0217]
The CPU 401, ROM 402, and RAM 403 are connected to each other via a bus 405. The bus 405 is also connected to an image processing unit 404 that performs processing to reduce or exaggerate distortion of a supplied image, similar to the DSP 16 or DSP 371 described above.
[0218]
An input/output interface 410 is also connected to the bus 405. The input/output interface 410 is connected to an input unit 411 including a keyboard, mouse, or the like, an outputting unit 412 including a display such as a CRT or LCD and a speaker, a storage unit 413 including a hard disk and the like, and a communication unit 414 including a modem, or the like. The communication unit 414 performs communication processing via a network including the Internet.
[0219]
A drive 415 is also connected as necessary to the input/output interface 410, and removable media 421 such as a magnetic disk, optical disk, magneto-optical disk, or semiconductor memory are appropriately attached. Computer programs read therefrom are installed in the storage unit 413 as necessary.
[0220]
In the personal computer 400 described above, under the control of the CPU 401 and the like, the image processing unit 404 acquires, via the bus 405, image data stored in the RAM 403, the memory unit 413, or the removable media 421 connected to the drive 415, or image data acquired from the outside via the communication unit 414, and performs image correction processing on the image data to reduce or exaggerate the image distortion as described above.

[0221]
When the image correction process is completed, the image processing unit 404, under the control of the CPU 401 and the like, supplies the corrected image data via the bus 405 to the RAM 403, the memory unit 413, or the removable media 421 connected to the drive 415 for storage, to the outputting unit 412 for display on a display or the like, or to the communication unit 414 for supplying the image data to an external device outside the personal computer 400.
[0222]
In this manner, the image processing unit 404 can perform processing to reduce or exaggerate image distortion more accurately, similar to the aforementioned DSP 16 or DSP 371. Thereby, the personal computer 400 can provide the corrected image, in which image distortion has been reduced or exaggerated more accurately, to the user by recording the corrected image on a recording medium or displaying on a display.
[0223]
As described above, various information processing devices to which the present invention is applied can accurately remove or exaggerate "distortion that exaggerates the sense of depth caused by close-up photography" from an image by detecting the position of the face of the photograph subject using face detection processing.
[0224]
Furthermore, various information processing devices to which the present invention is applied reconstruct a three-dimensional face model from the image of the face of the photograph subject, thereby enabling accurate correction processing to be performed on the image to be corrected, which cannot be obtained by simply deforming the image in two dimensions.
[0225]
Furthermore, various information processing devices to which the present invention is applied use a shape that combines two ellipsoids as a three-dimensional face model, thereby constructing an "uncomplicated and accurate face model," so as to enable performing correction processing easily and more accurately without the need for complex calculations.
[0226]
Furthermore, various information processing devices to which the present invention is applied delete portions of the three-dimensional face model that are not visible in the image actually obtained by photographing (portions that are not included in the image) and perform deformation processing only on the portions that are visible, thereby enabling more accurate correction processing to be performed without causing a breakdown in the corrected image.
[0227]
Note that the various information processing devices to which the present invention is applied may, for example, detect the position of the face of the photograph subject using face detection processing by assuming that the position of the face is at the center of the image, and deform the face image by image deformation in two dimensions. Furthermore, for example, when photographing a face, in most cases the face is photographed at the center, so it is possible to assume that the face is at the center without performing face detection, reconstruct a three-dimensional face model from the photographed image of the face of the photograph subject, and remove or exaggerate distortion from the image.
[0228]
As described above, various information processing devices to which the present invention is applied can eliminate the unnaturalness of images obtained by close-up photographing of the face of a person, such as a nose appearing larger due to the proximity to the camera. Conversely, images can be synthesized to further exaggerate the distortion. Furthermore, various information processing devices to which the present invention is applied can perform accurate conversion by assuming three-dimensional virtual space as a conversion model, estimating the position of the camera and the photograph subject, and then changing the positional relationship therebetween. In other words, various information processing devices to which the present invention is applied can synthesize an image that appears as if the image was taken after moving the camera position as viewed from the photograph subject farther or closer.
[0229]
It should be noted that various information processing devices to which the present invention is applied can also perform image correction processing on still image data in the same manner as the aforementioned case of correcting moving image data.

[0230]
Furthermore, in the forgoing, the case where the face portion of the photograph subject contained in an image (photograph image) is detected and correction processing is performed on that face image is described, but the image to be corrected may be an object other than the face of the photograph subject, and may be any detectable image of the photograph subject such as eyes, hands, fingers, torso, and the like. Furthermore, the photograph subject may be anything other than a person or an animal, such as a plant or a building.
[0231]
The aforementioned series of processes can be executed by hardware or can be executed by software. When the series of processes is executed by software, programs including the software are installed from a network or a recording medium.
[0232]
As depicted in FIG. 1, FIG. 24, or FIG. 25, the recording medium not only includes magnetic disks (including floppy disks), optical disks (including CD-ROM (Compact Disk-Read Only Memory), DVD (Digital Versatile Disk)), optical magnetic disks (including MD (Mini-Disk)), or removable medium 51, memory card 323, or removable medium 421 made of a semiconductor memory or the like on which the program is recorded, which are distributed to the user separately from the device body in order to provide the program to the user, but also includes ROM 42 on which the program is recorded, a hard disk included in the storage unit 45, ROM included in the main control unit 351, ROM 402, or a hard disk included in the storage unit 413, which are provided to the user in a pre-installed state in the device body.
[0233]
Note that in this specification, the steps of describing a program to be recorded on a recording medium include not only processes that are performed chronologically in the order described above, but also processes that are not necessarily performed chronologically but are executed in parallel or individually.
[0234]
Furthermore, in this specification, the term "system" refers to an entire device containing a plurality of devices.
[Brief Description of Drawings]
[0235]
FIG. 1 is a block diagram depicting an example of a configuration of a camcorder using the present invention.
FIG. 2 is a block diagram depicting a detailed configuration example of the DSP depicted in FIG. 1.
FIG. 3 is a flowchart for describing an image correction process.
FIG. 4 is a diagram depicting an example of the state of a photograph image.
FIG. 5 is a flowchart for describing details of a three-dimensional face model position calculation process executed in step S4 of FIG. 3.
FIG. 6 is a diagram depicting an example of a three-dimensional face model.
FIG. 7 is a diagram depicting an example of three-dimensional virtual space.
FIG. 8 is a diagram for describing an example of specifying the position of a three-dimensional face model.
FIG. 9 is a flowchart for describing details of the distance calculation process executed in step S25 of FIG. 5.
FIG. 10 is a diagram for describing an example of calculating a distance of a three-dimensional face model.
FIG. 11 is a flowchart for describing the details of the texture setting process executed in step S5 of FIG. 3.
FIG. 12 is a diagram for describing an example of setting the texture.
FIG. 13 is a diagram for describing an example of specifying a necessary portion of the three-dimensional face model.
FIG. 14 is a diagram depicting an example of deleting unnecessary parts of a three-dimensional face model.
FIG. 15 is a flowchart for describing details of the corrected image creation process executed in step S6 of FIG. 3.

FIG. 16 is a diagram depicting an example of adjusting the virtual screen size.
FIG. 17 is a diagram depicting an example of moving the camera focal point on the xy plane.
FIG. 18 is a flowchart for describing details of the rendering process executed in step S83 of FIG. 15.
FIG. 19 is a diagram for describing an example of obtaining the coordinates of a representative point.
FIG. 20 is a diagram for describing an example of determining a representative point.
FIG. 21 is a diagram depicting an example of change in the coordinates of a representative point.
FIG. 22 is a diagram for describing an example of image conversion in a polygon.
FIG. 23 is a diagram for describing an example of image conversion.
FIG. 24 is a diagram depicting an example of the configuration of a digital mobile phone with a camera that applies the present invention.
FIG. 25 is a diagram depicting an example of the configuration of a personal computer that applies the present invention.
[Description of Reference Signs]
[0236]
1. Camcorder; 11. Lens; 12. Aperture; 13. CCD; 14. Pre-processing circuit; 15. A/D conversion unit; 16. DSP; 17. Codec unit; 18. Image storage unit; 19. D/A conversion unit; 20. Video encoder; 21. Video monitor; 61. Image data input unit; 62. Internal bus; 63. Storage control unit; 65. Setting value acquisition unit; 66. Face detection processing unit; 67. Three-dimensional face model position calculation processing unit; 68. Texture setting processing unit; 69. Corrected image creation processing unit; 70. Image data outputting unit; 81. Image data storage unit; 82. Setting value storage unit; 83. Virtual data storage unit; 100. Face image; 120. Three-dimensional face model; 140. Camera focal point; 142. Virtual screen; 300. Digital mobile phone with a camera; 316. CCD camera; 371. DSP; 400. Personal computer; 404. Image processing unit

[FIG. 1]

FIG. 1

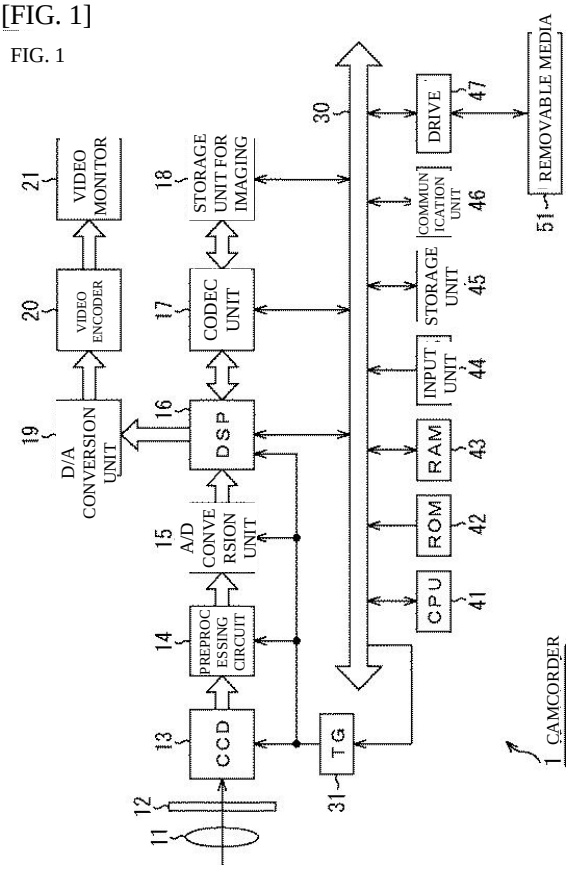

[FIG. 2]

FIG. 2

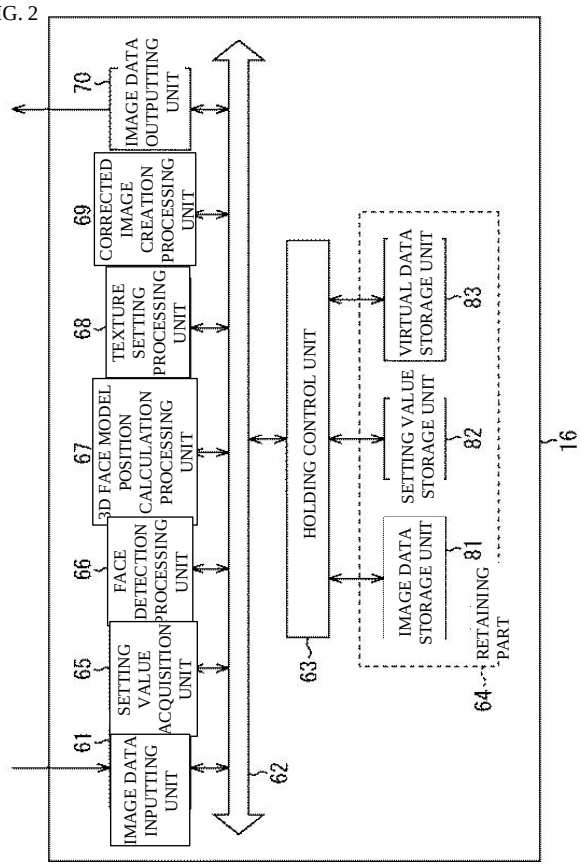

[FIG. 3]

FIG. 3

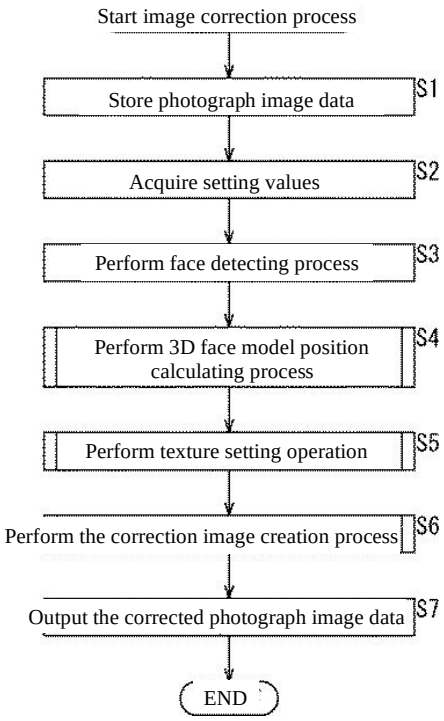

[FIG. 4]

FIG. 4

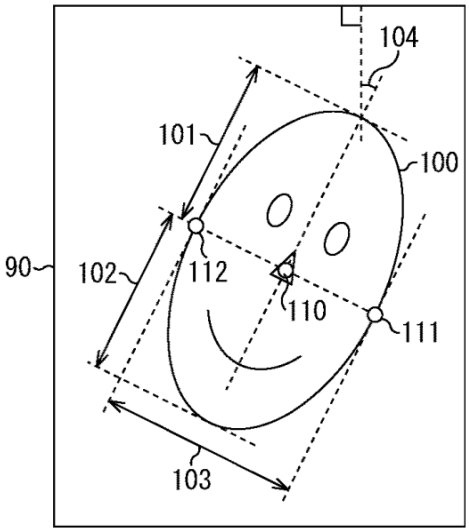

[FIG. 5]

FIG. 5

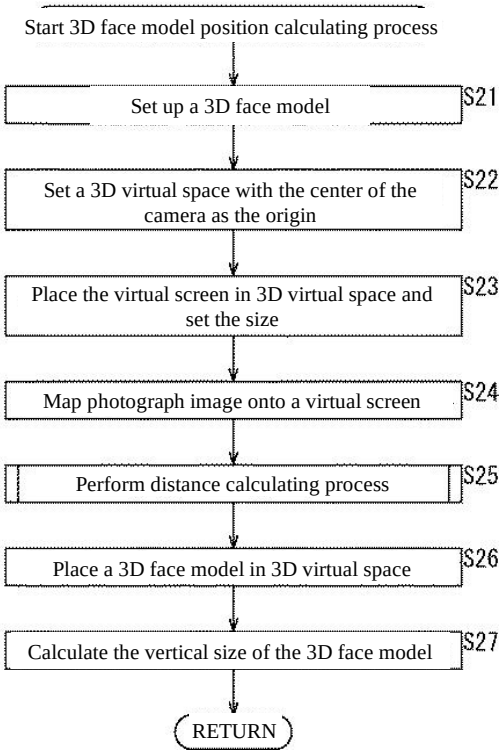

[FIG. 6]

FIG. 6

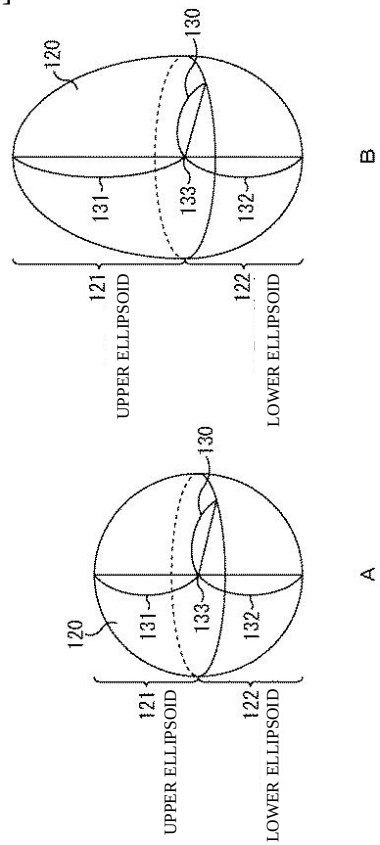

[FIG. 7]

FIG. 7

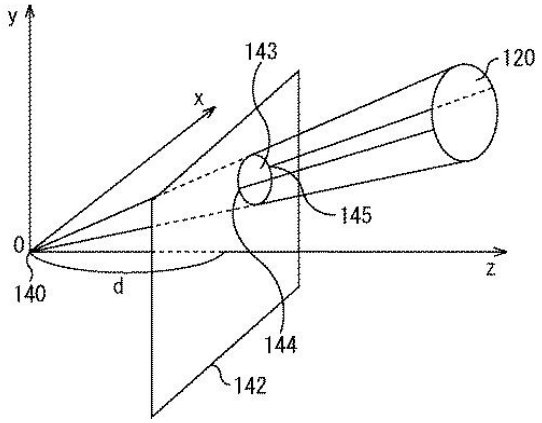

[FIG. 8]

FIG. 8

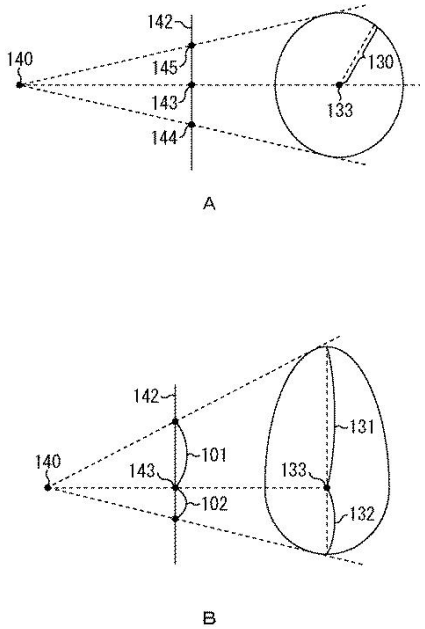

[FIG. 9]

FIG. 9

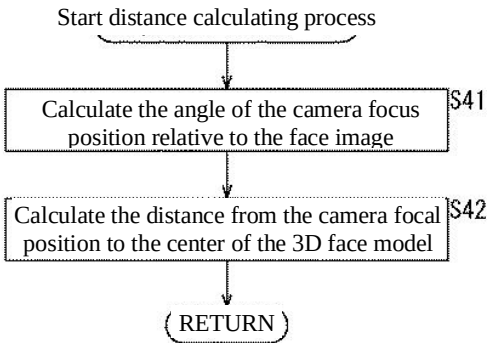

[FIG. 10]

FIG. 10

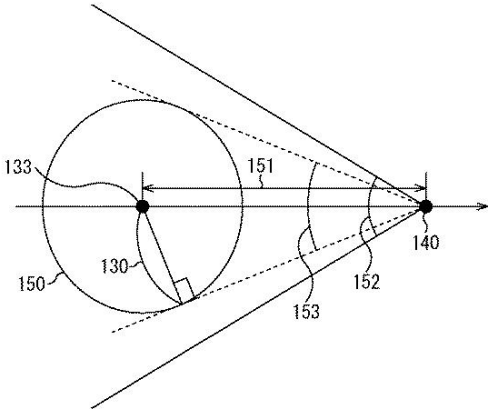

[FIG. 11]

FIG. 11

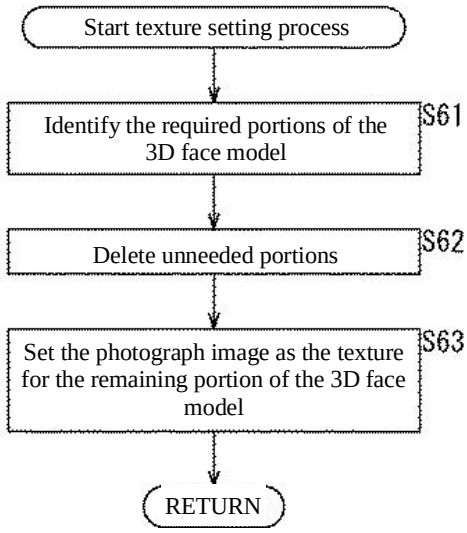

[FIG. 12]

FIG. 12

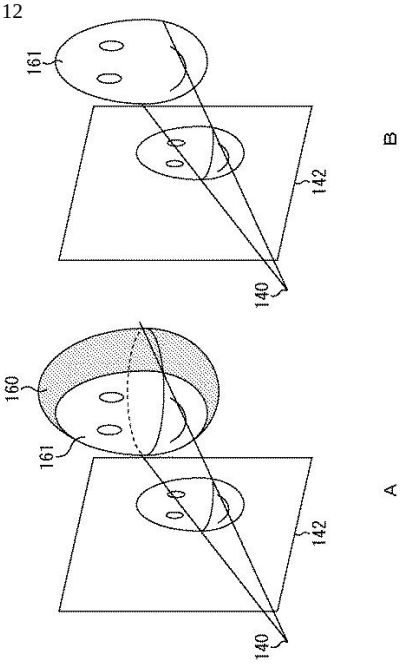

[FIG. 13]

FIG. 13

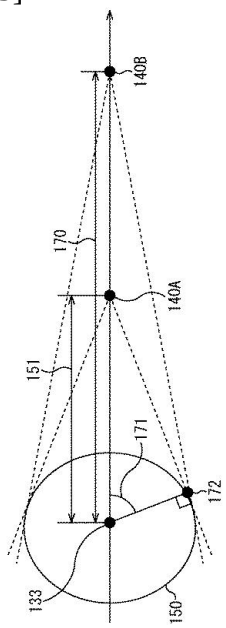

8

[FIG. 14]

FIG. 14

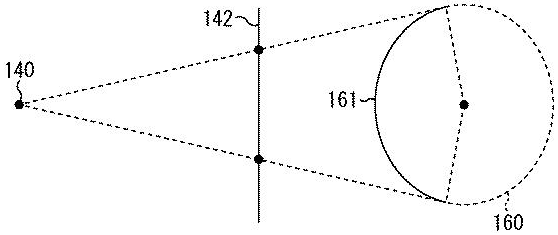

[FIG. 15]

FIG. 15

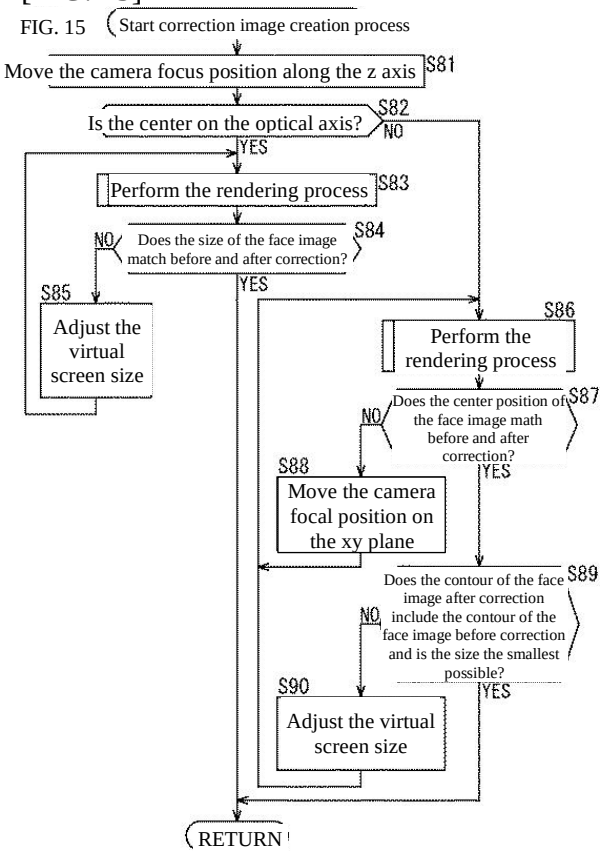

[FIG. 16]

FIG. 16

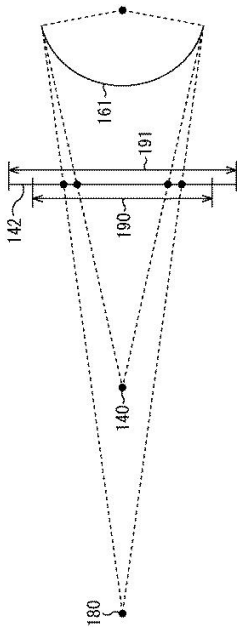

[FIG. 17]

FIG. 17

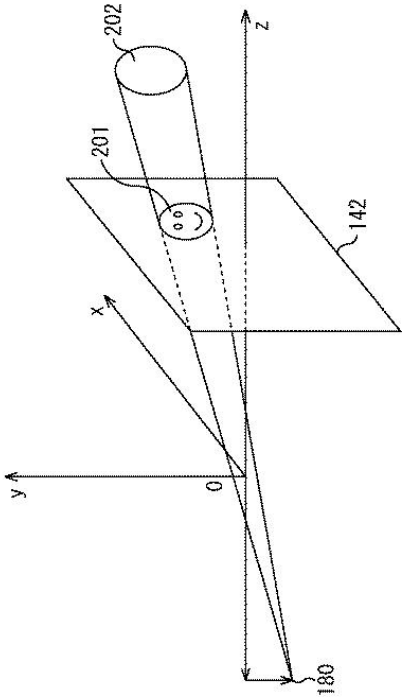

[FIG. 18]

FIG. 18

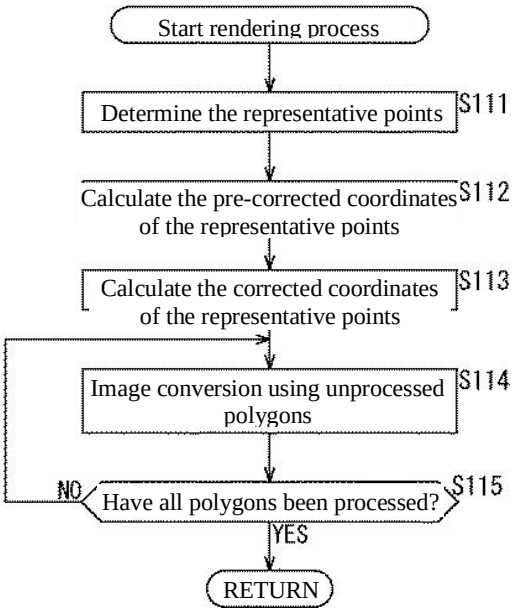

[FIG. 19]

FIG. 19

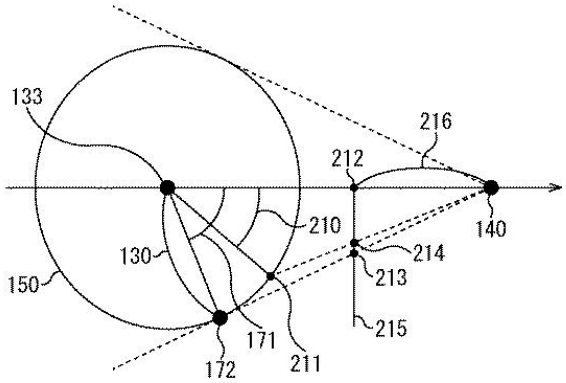

[FIG. 20]

FIG. 20

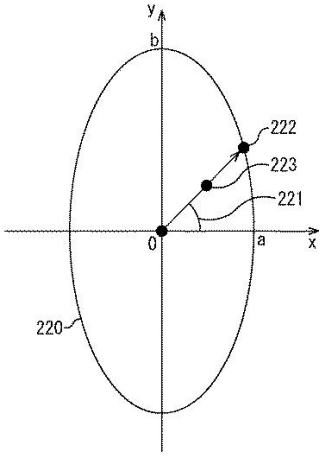

[FIG. 21]

FIG. 21

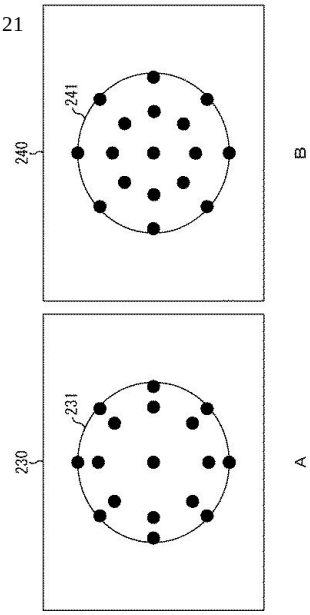

[FIG. 22]

FIG. 22

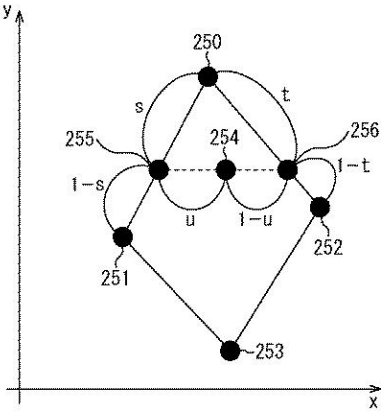

[FIG. 23]

FIG. 23

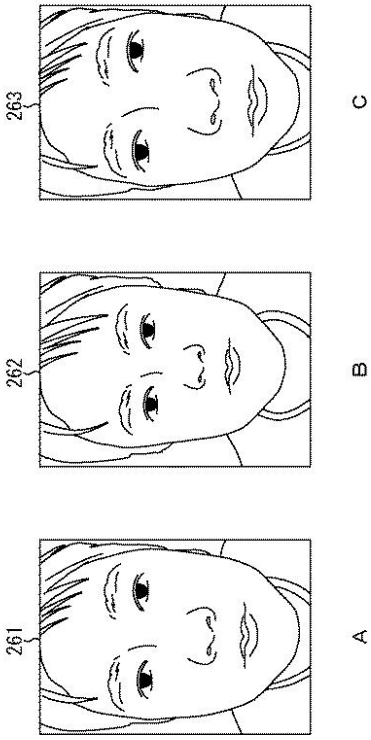

[FIG. 24]

FIG. 24

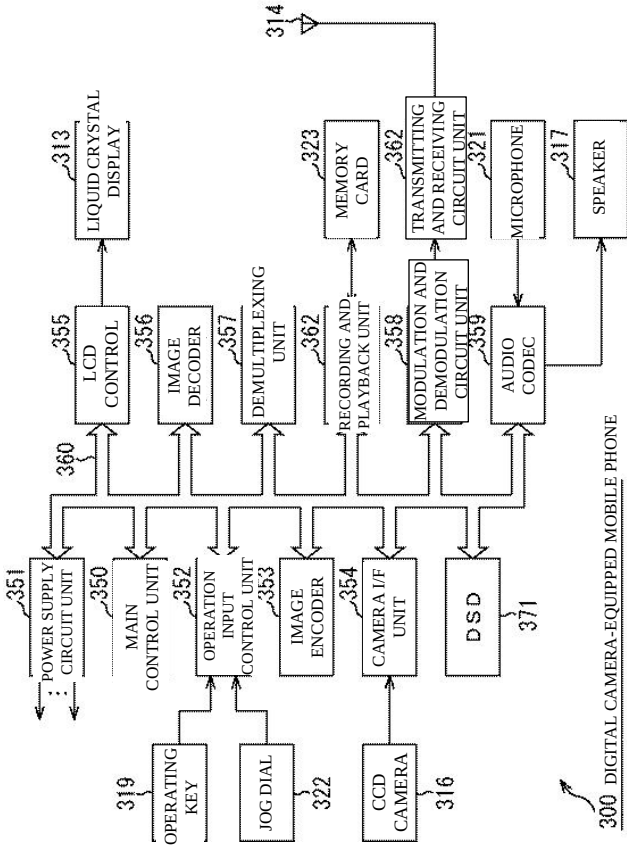

[FIG. 25]

FIG. 25

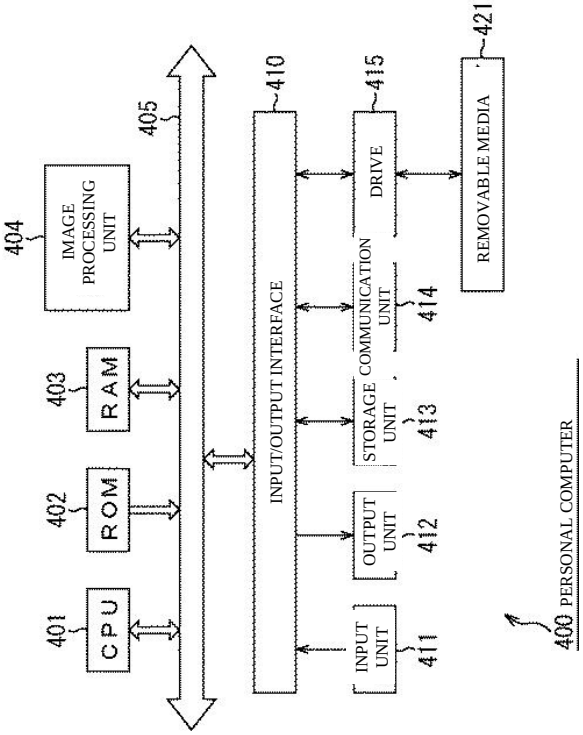

CONSORTRA
TRANSLATIONS

100 Park Avenue, 16th Fl
New York, NY 10017
www.consortra.com

STATE of TEXAS)
) ss:
COUNTY of HARRIS)

CERTIFICATE OF ACCURACY

This is to certify that the attached document, "JP2005025703A - Yamada"-- originally written in *Japanese* -- is, to the best of our knowledge and belief, a true, accurate, and complete translation into *English*.

Dated: 7/18/2024

Susannah Smith
Susannah Smith
Project Manager
Consortra Translations

Sworn to and signed before ME
This 18th day of July, 2024

Notary Public

JEFFREY MAMERA
Notary Public, State of Texas
Comm. Expires 12-07-2026
Notary ID 134094816

Your legal translation partner