US 20030217005A1

(19) United States

(12) Patent Application Publication

(10) Pub. No.: US 2003/0217005 A1

(43) Pub. Date: Nov. 20, 2003

Drummond et al.

(54) AUTOMATED BANKING MACHINE SYSTEM AND METHOD

(75) Inventors: **Jay Paul Drummond**, Massillon, OH (US); **Mark D. Smith**, North Canton, OH (US); **Michael A. Meffie**, North Canton, OH (US); **Daniel D. Wasil**, Wellington, OH (US)

Correspondence Address:
RALPH E. JOCKE
231 SOUTH BROADWAY
MEDINA, OH 44256 (US)

(73) Assignee: **Diebold Self Service Systems, division of Diebold, Incorporated**

(21) Appl. No.: **10/430,123**

(22) Filed: **May 5, 2003**

Related U.S. Application Data

(63) Continuation-in-part of application No. 09/638,848, filed on Aug. 14, 2000.
Continuation-in-part of application No. 09/578,291, filed on May 25, 2000.
Continuation-in-part of application No. 09/193,787, filed on Nov. 17, 1998.
Continuation-in-part of application No. PCT/US97/21422, filed on Nov. 25, 1997.

(60) Provisional application No. 60/378,705, filed on May 7, 2002. Provisional application No. 60/423,756, filed on Nov. 5, 2002. Provisional application No. 60/149,765, filed on Aug. 19, 1999. Provisional application No. 60/144,761, filed on Jul. 20, 1999. ERROR - said-application ERROR - application-number ERROR - is-a Provisional application No. 60/095,626, filed on Aug. 7, 1998. Provisional application No. 60/091,887, filed on Jul. 7, 1998. Provisional application No. 60/098,907, filed on Sep. 2, 1998. ERROR - said-application ERROR - application-number ERROR - is-a Provisional application No. 60/031,956, filed on Nov. 27, 1996.

Publication Classification

(51) **Int. Cl.**[7] **G06F 17/60**

(52) **U.S. Cl.** **705/43**

(57) **ABSTRACT**

A system and method of providing an electronic transaction receipt from a cash dispensing ATM. A bank host computer is operable to submit the receipt to a system address of record with the bank. The address of record corresponds to an e-mail address, phone number or other address associated with an account involved in the transaction. The receipt may include an image or images associated with the transaction. Thus, a user of an ATM is able to receive an electronic receipt corresponding to the ATM transaction. The system may also operate to image deposited checks deposited at an ATM. Copies of the imaged checks and other information can be electronically sent to a maker, payee, a clearinghouse or banks involved with the transaction. The system may also operate to provide the user with blank checks in hard copy or virtual checks for transactions.

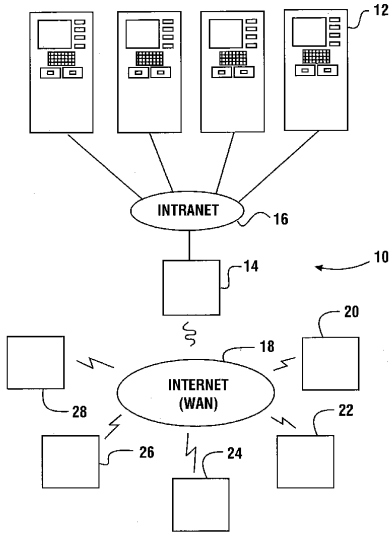

Early Warning
IPR2024-01221
Ex. 1008-1

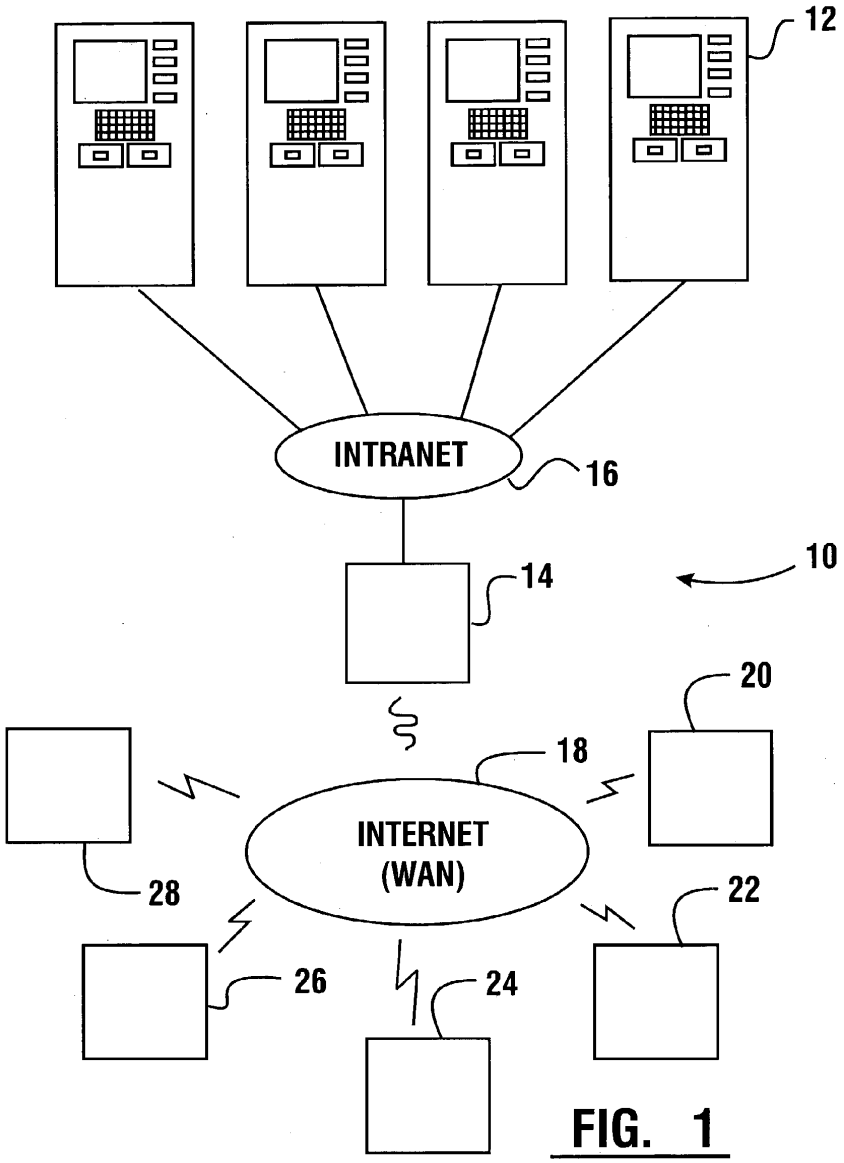

FIG. 1

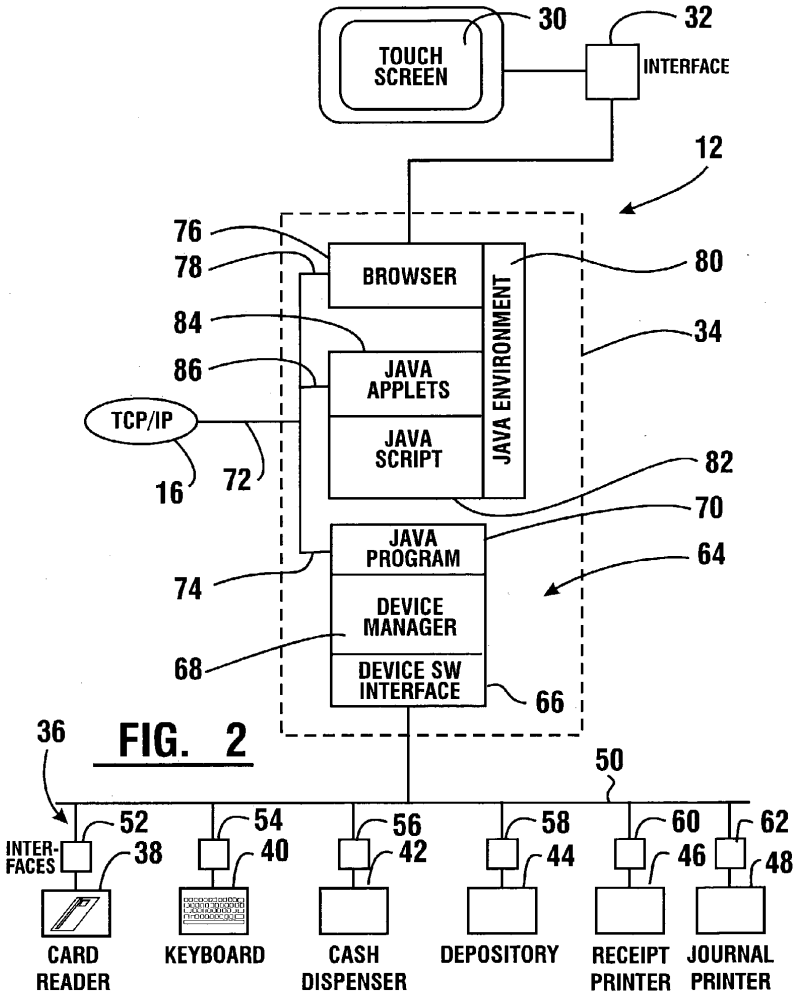
TOUCH SCREEN
30
32
INTERFACE
12
76
78
BROWSER
80
84
34
86
JAVA APPLETS
JAVA ENVIRONMENT
TCP/IP
JAVA SCRIPT
82
16
72
70
JAVA PROGRAM
64
74
DEVICE MANAGER
68
DEVICE SW INTERFACE
66
36
50
52
54
56
58
60
62
INTER-FACES
38
40
42
44
46
48
CARD READER
KEYBOARD
CASH DISPENSER
DEPOSITORY
RECEIPT PRINTER
JOURNAL PRINTER

FIG. 2

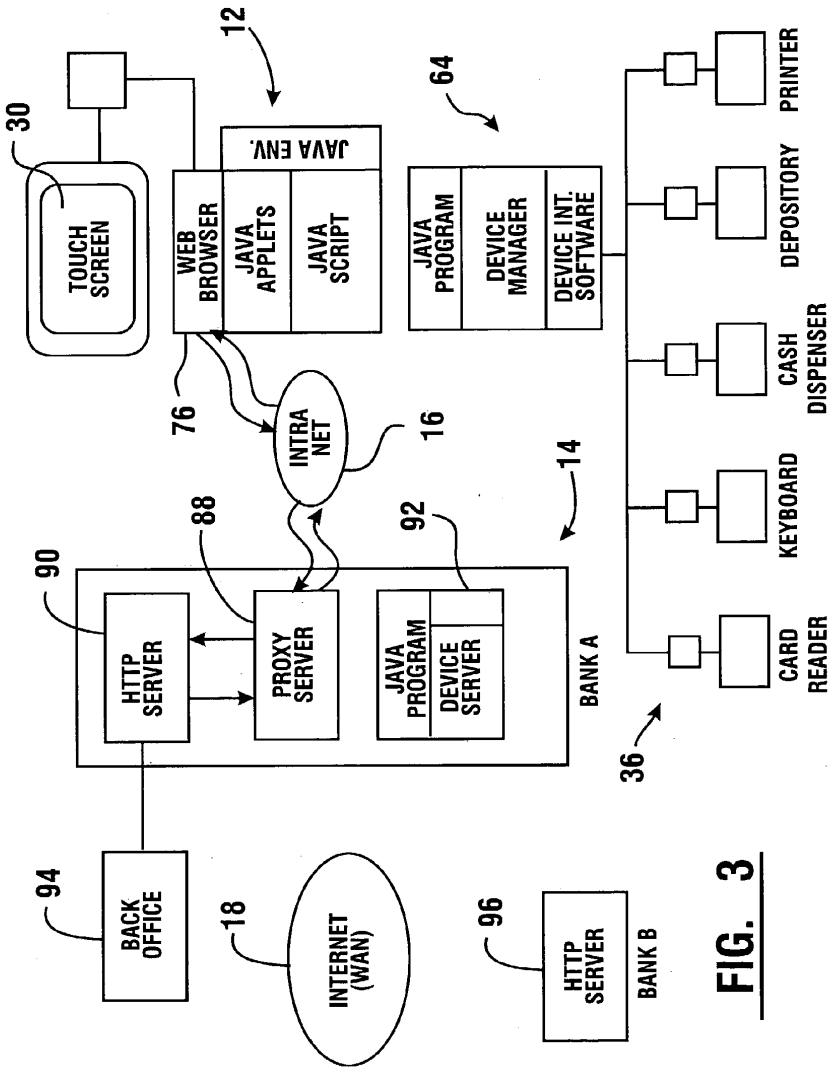
12
30
TOUCH SCREEN
JAVA ENV.
WEB BROWSER
JAVA APPLETS
JAVA SCRIPT
64
JAVA PROGRAM
DEVICE MANAGER
DEVICE INT. SOFTWARE
PRINTER
DEPOSITORY
CASH DISPENSER
KEYBOARD
CARD READER
76
INTRA NET
16
14
88
92
90
HTTP SERVER
PROXY SERVER
JAVA PROGRAM
DEVICE SERVER
BANK A
36
94
BACK OFFICE
18
INTERNET (WAN)
96
HTTP SERVER
BANK B

FIG. 3

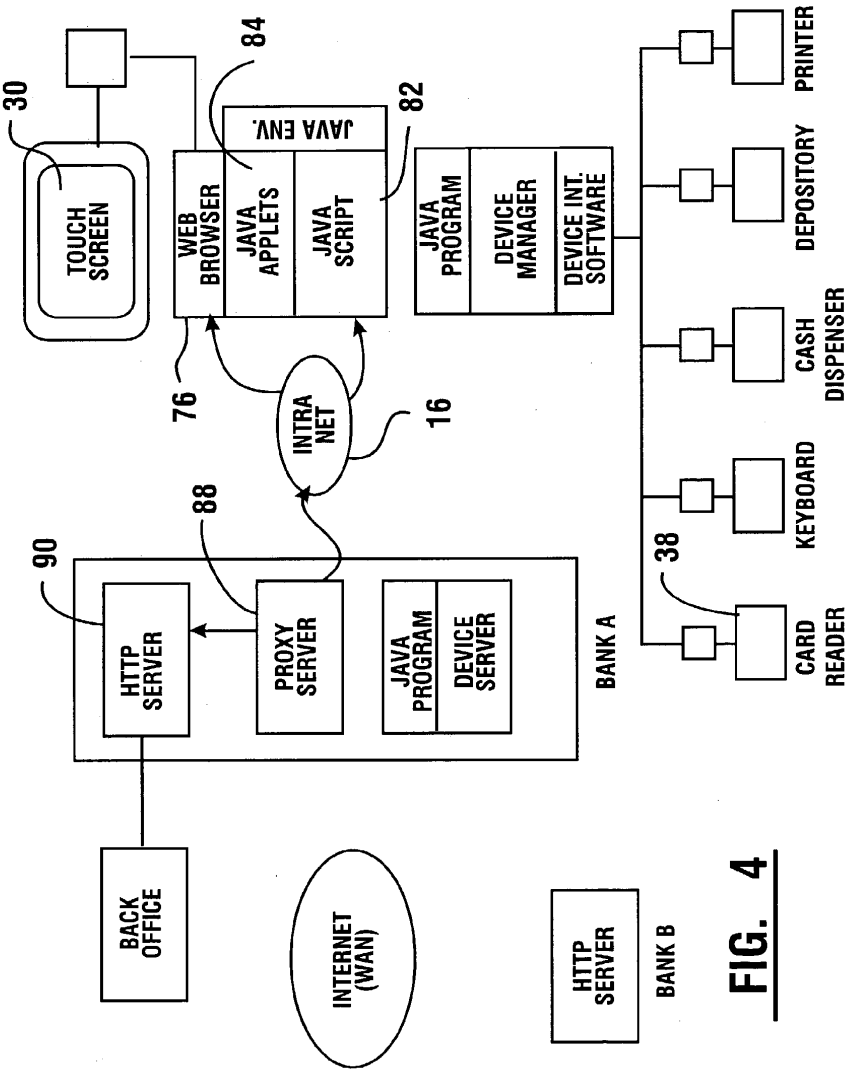
30
TOUCH SCREEN
84
JAVA ENV.
WEB BROWSER
JAVA APPLETS
JAVA SCRIPT
82
76
INTRA NET
16
JAVA PROGRAM
DEVICE MANAGER
DEVICE INT. SOFTWARE
PRINTER
DEPOSITORY
CASH DISPENSER
KEYBOARD
CARD READER
38
90
88
HTTP SERVER
PROXY SERVER
JAVA PROGRAM
DEVICE SERVER
BANK A
BACK OFFICE
INTERNET (WAN)
HTTP SERVER
BANK B

FIG. 4

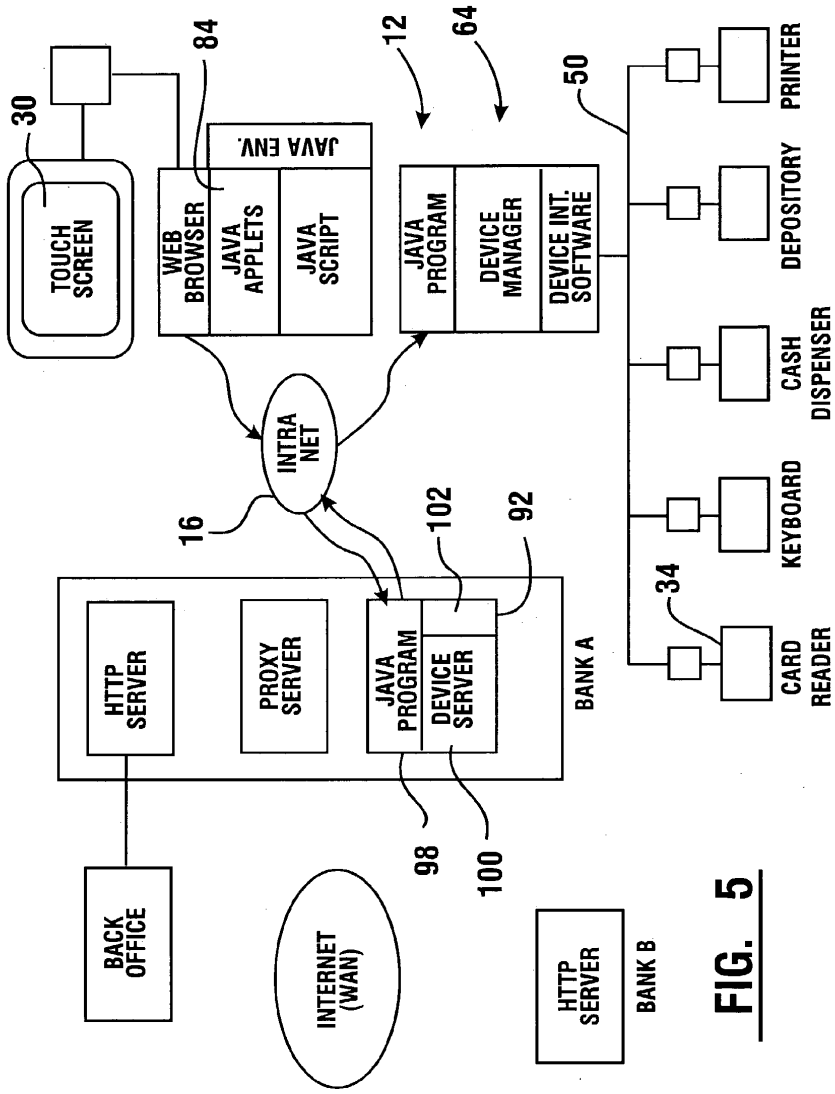
30
TOUCH SCREEN
84
WEB BROWSER
JAVA APPLETS
JAVA SCRIPT
JAVA ENV.
12
64
JAVA PROGRAM
DEVICE MANAGER
DEVICE INT. SOFTWARE
50
PRINTER
DEPOSITORY
CASH DISPENSER
KEYBOARD
CARD READER
34
INTRA NET
16
102
92
HTTP SERVER
PROXY SERVER
JAVA PROGRAM
DEVICE SERVER
BANK A
98
100
BACK OFFICE
INTERNET (WAN)
HTTP SERVER
BANK B

FIG. 5

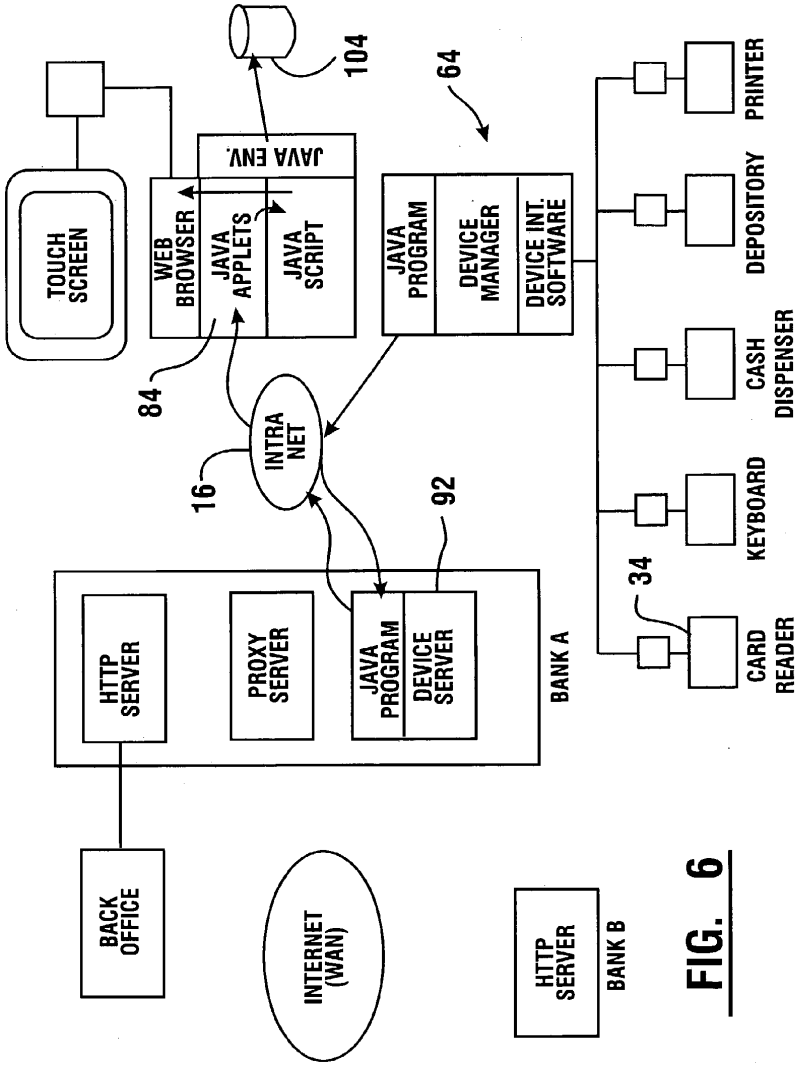
TOUCH SCREEN
WEB BROWSER
JAVA APPLETS
JAVA SCRIPT
JAVA ENV.
104
84
16
INTRA NET
64
JAVA PROGRAM
DEVICE MANAGER
DEVICE INT. SOFTWARE
92
HTTP SERVER
PROXY SERVER
JAVA PROGRAM
DEVICE SERVER
BANK A
BACK OFFICE
INTERNET (WAN)
HTTP SERVER
BANK B
34
CARD READER
KEYBOARD
CASH DISPENSER
DEPOSITORY
PRINTER

FIG. 6

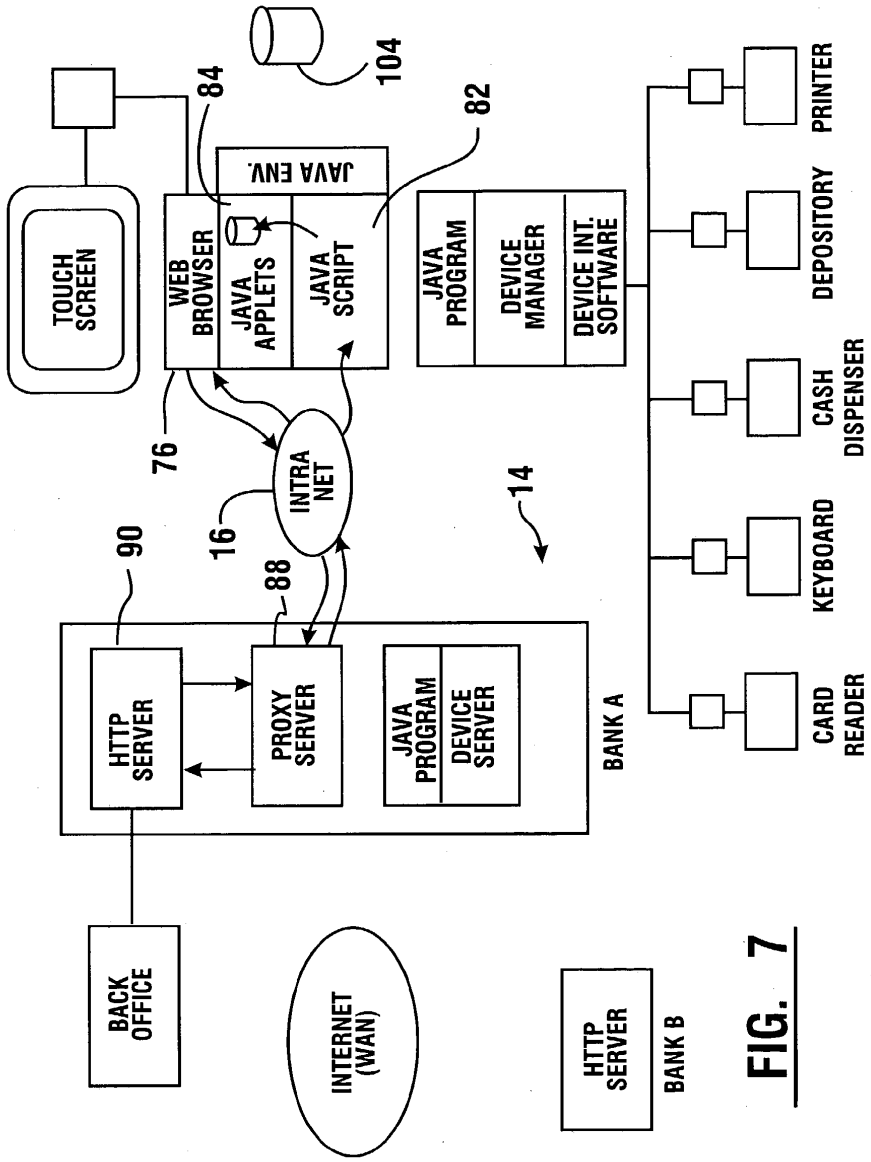
TOUCH SCREEN
WEB BROWSER
JAVA APPLETS
JAVA SCRIPT
JAVA ENV.
84
104
82
76
16
INTRA NET
14
JAVA PROGRAM
DEVICE MANAGER
DEVICE INT. SOFTWARE
PRINTER
DEPOSITORY
CASH DISPENSER
KEYBOARD
CARD READER
90
88
HTTP SERVER
PROXY SERVER
JAVA PROGRAM
DEVICE SERVER
BANK A
BACK OFFICE
INTERNET (WAN)
HTTP SERVER
BANK B

FIG. 7

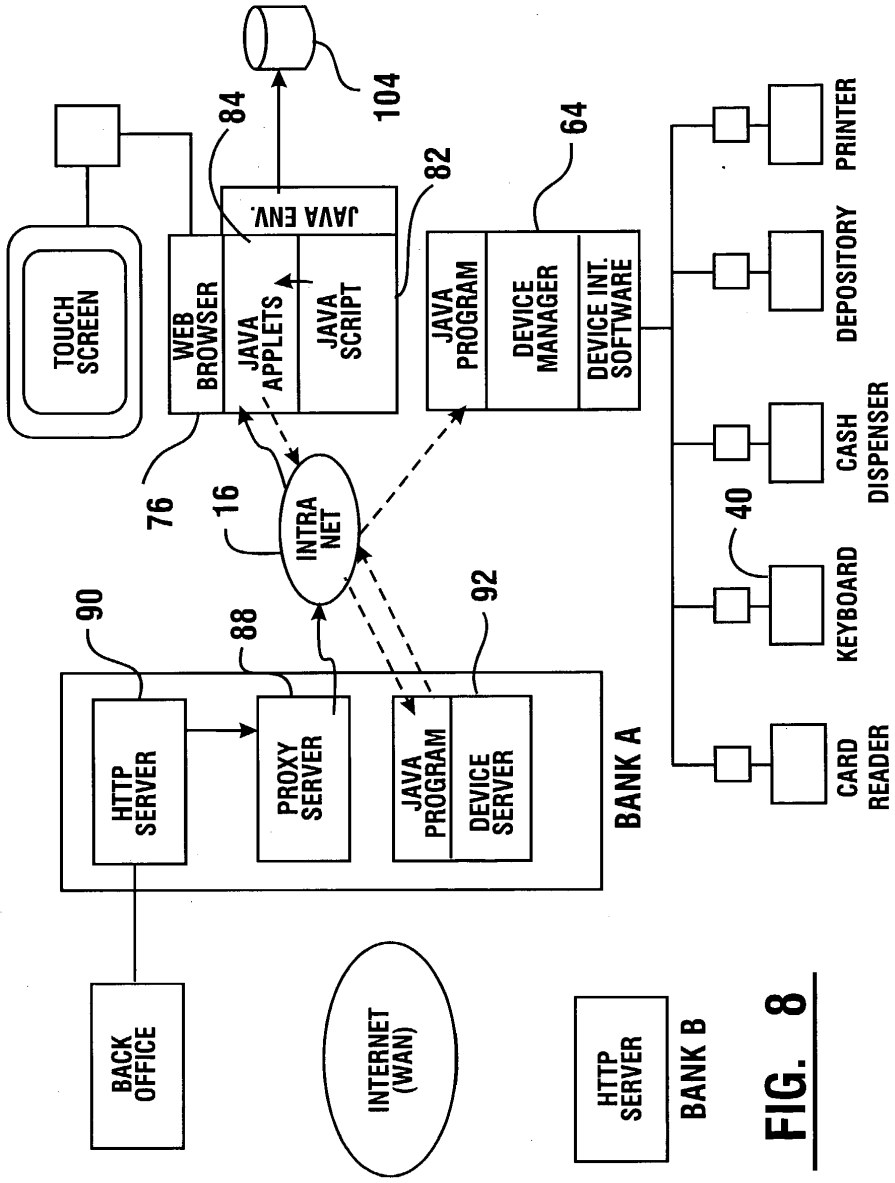
TOUCH SCREEN
WEB BROWSER
JAVA APPLETS
JAVA SCRIPT
JAVA ENV.
JAVA PROGRAM
DEVICE MANAGER
DEVICE INT. SOFTWARE
INTRA NET
HTTP SERVER
PROXY SERVER
JAVA PROGRAM
DEVICE SERVER
BANK A
BACK OFFICE
INTERNET (WAN)
HTTP SERVER
BANK B
PRINTER
DEPOSITORY
CASH DISPENSER
KEYBOARD
CARD READER
104
84
82
64
76
16
90
88
92
40

FIG. 8

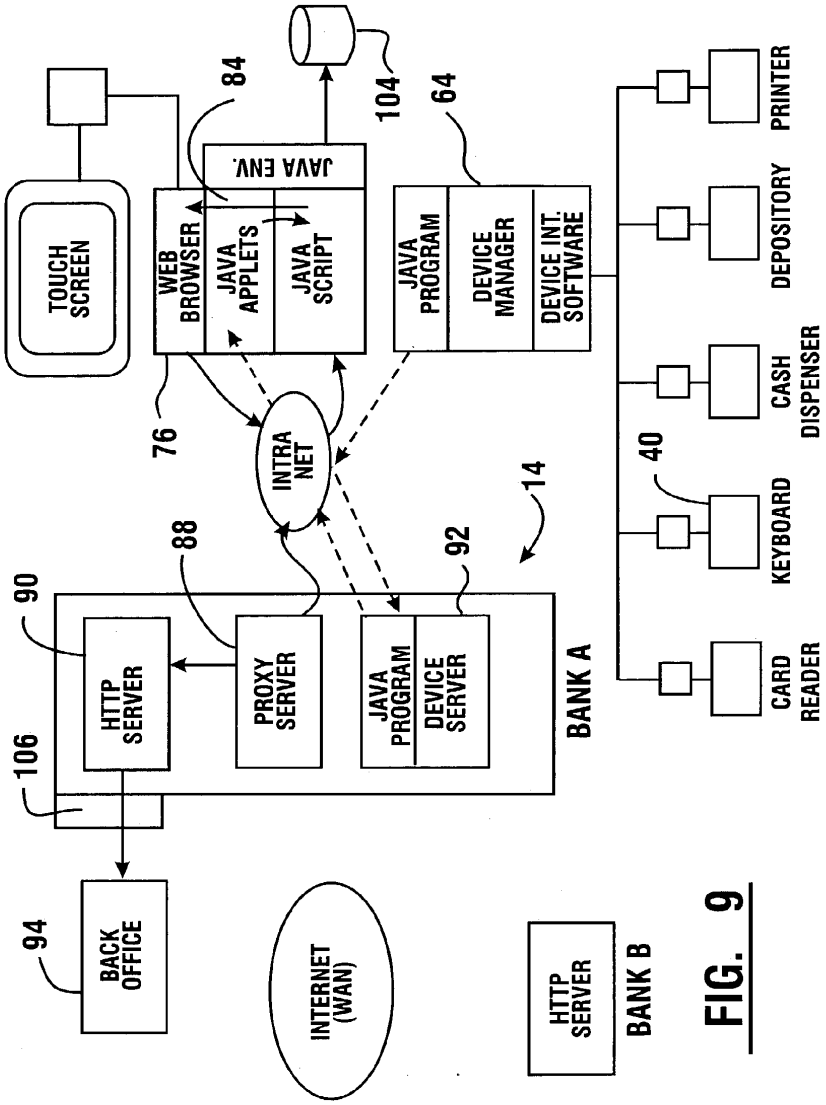
TOUCH SCREEN
WEB BROWSER
JAVA APPLETS
JAVA SCRIPT
JAVA ENV.
JAVA PROGRAM
DEVICE MANAGER
DEVICE INT. SOFTWARE
INTRA NET
HTTP SERVER
PROXY SERVER
JAVA PROGRAM
DEVICE SERVER
BANK A
BACK OFFICE
INTERNET (WAN)
HTTP SERVER
BANK B
PRINTER
DEPOSITORY
CASH DISPENSER
KEYBOARD
CARD READER
84
104
64
76
88
90
92
14
40
106
94

FIG. 9

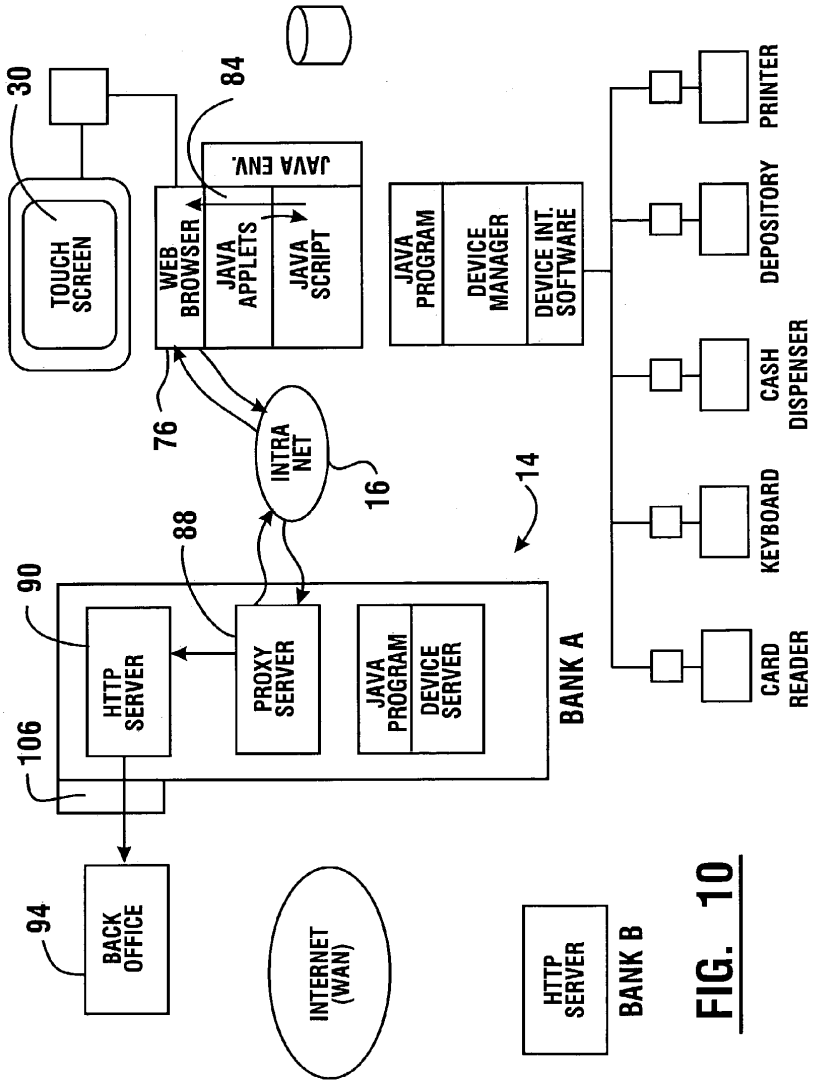
30
TOUCH SCREEN
84
JAVA ENV.
WEB BROWSER
JAVA APPLETS
JAVA SCRIPT
JAVA PROGRAM
DEVICE MANAGER
DEVICE INT. SOFTWARE
PRINTER
DEPOSITORY
CASH DISPENSER
KEYBOARD
CARD READER
76
INTRA NET
16
14
88
90
HTTP SERVER
PROXY SERVER
JAVA PROGRAM
DEVICE SERVER
BANK A
106
94
BACK OFFICE
INTERNET (WAN)
HTTP SERVER
BANK B

FIG. 10

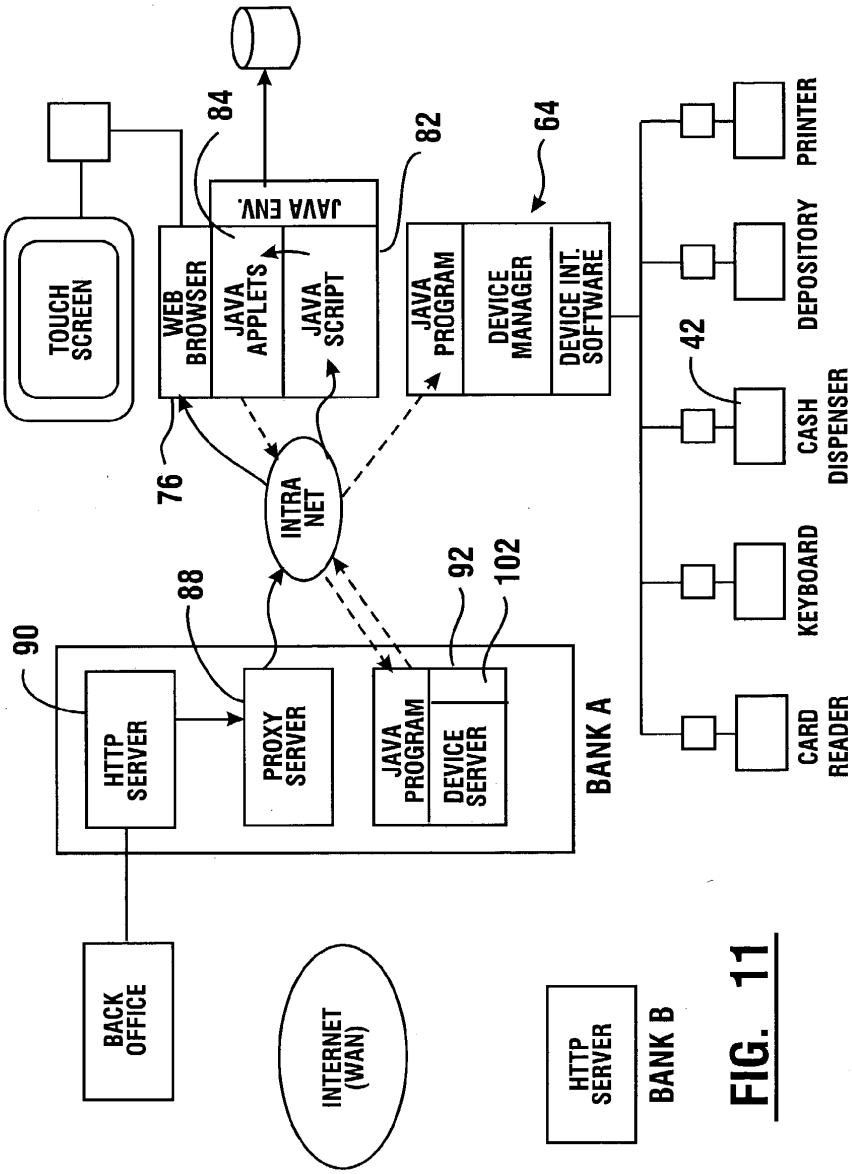
TOUCH SCREEN
WEB BROWSER
JAVA APPLETS
JAVA SCRIPT
JAVA ENV.
JAVA PROGRAM
DEVICE MANAGER
DEVICE INT. SOFTWARE
INTRA NET
HTTP SERVER
PROXY SERVER
JAVA PROGRAM
DEVICE SERVER
BANK A
BACK OFFICE
INTERNET (WAN)
HTTP SERVER
BANK B
PRINTER
DEPOSITORY
CASH DISPENSER
KEYBOARD
CARD READER
84
82
64
76
88
90
92
102
42

FIG. 11

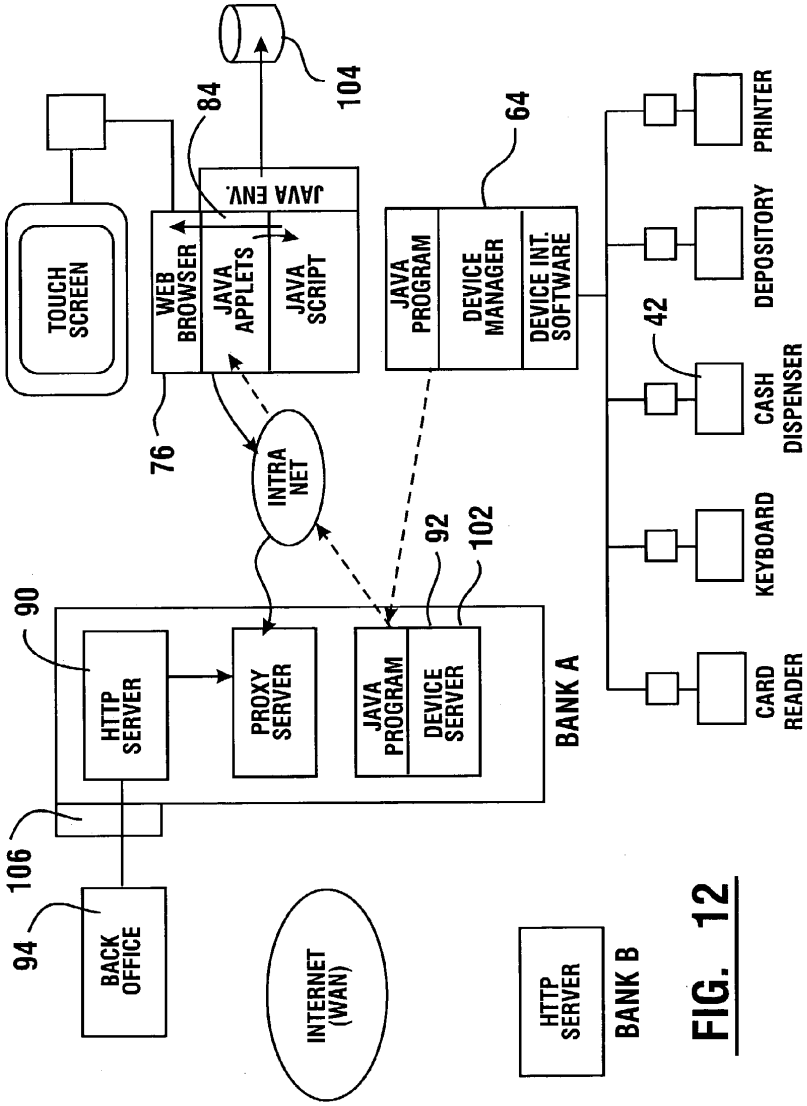
TOUCH SCREEN
WEB BROWSER
JAVA APPLETS
JAVA SCRIPT
JAVA ENV.
84
104
76
INTRA NET
JAVA PROGRAM
DEVICE MANAGER
DEVICE INT. SOFTWARE
64
PRINTER
DEPOSITORY
CASH DISPENSER
42
KEYBOARD
CARD READER
90
HTTP SERVER
PROXY SERVER
JAVA PROGRAM
DEVICE SERVER
92
102
BANK A
106
94
BACK OFFICE
INTERNET (WAN)
HTTP SERVER
BANK B

FIG. 12

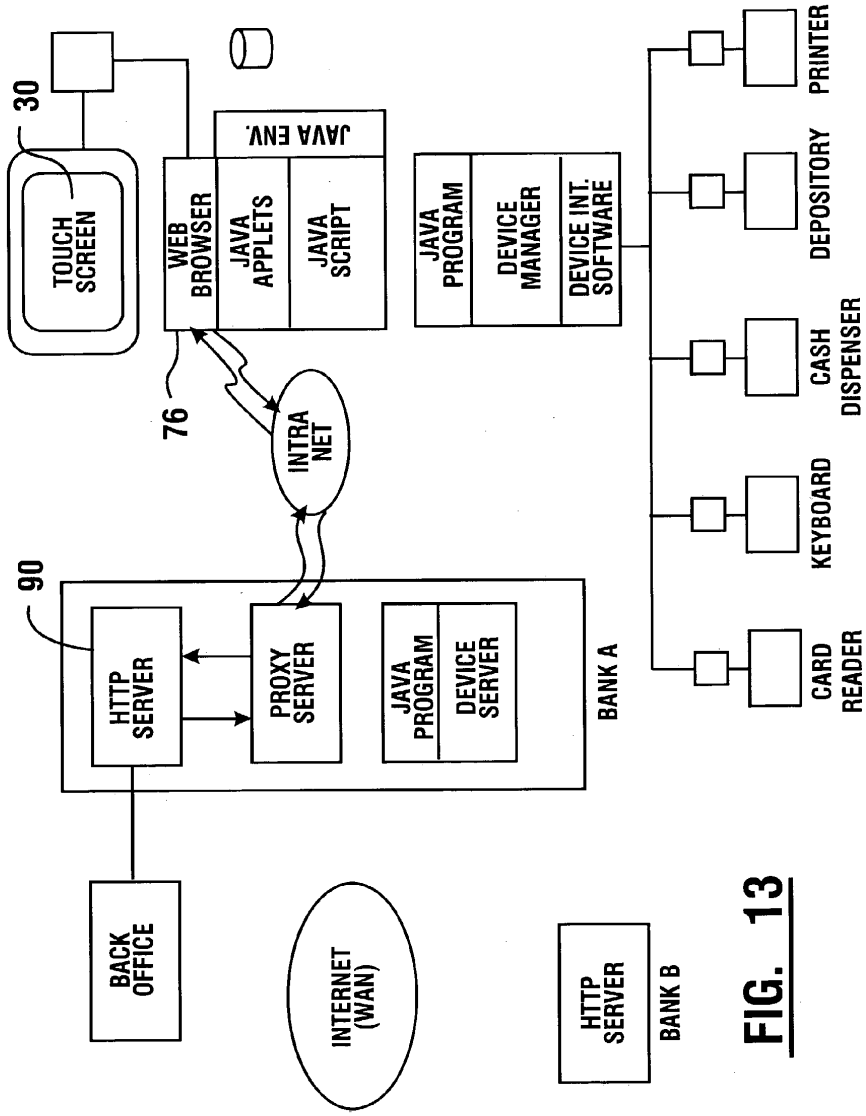
30
TOUCH SCREEN
WEB BROWSER
JAVA APPLETS
JAVA SCRIPT
JAVA ENV.
76
INTRA NET
JAVA PROGRAM
DEVICE MANAGER
DEVICE INT. SOFTWARE
PRINTER
DEPOSITORY
CASH DISPENSER
KEYBOARD
CARD READER
90
HTTP SERVER
PROXY SERVER
JAVA PROGRAM
DEVICE SERVER
BANK A
BACK OFFICE
INTERNET (WAN)
HTTP SERVER
BANK B

FIG. 13

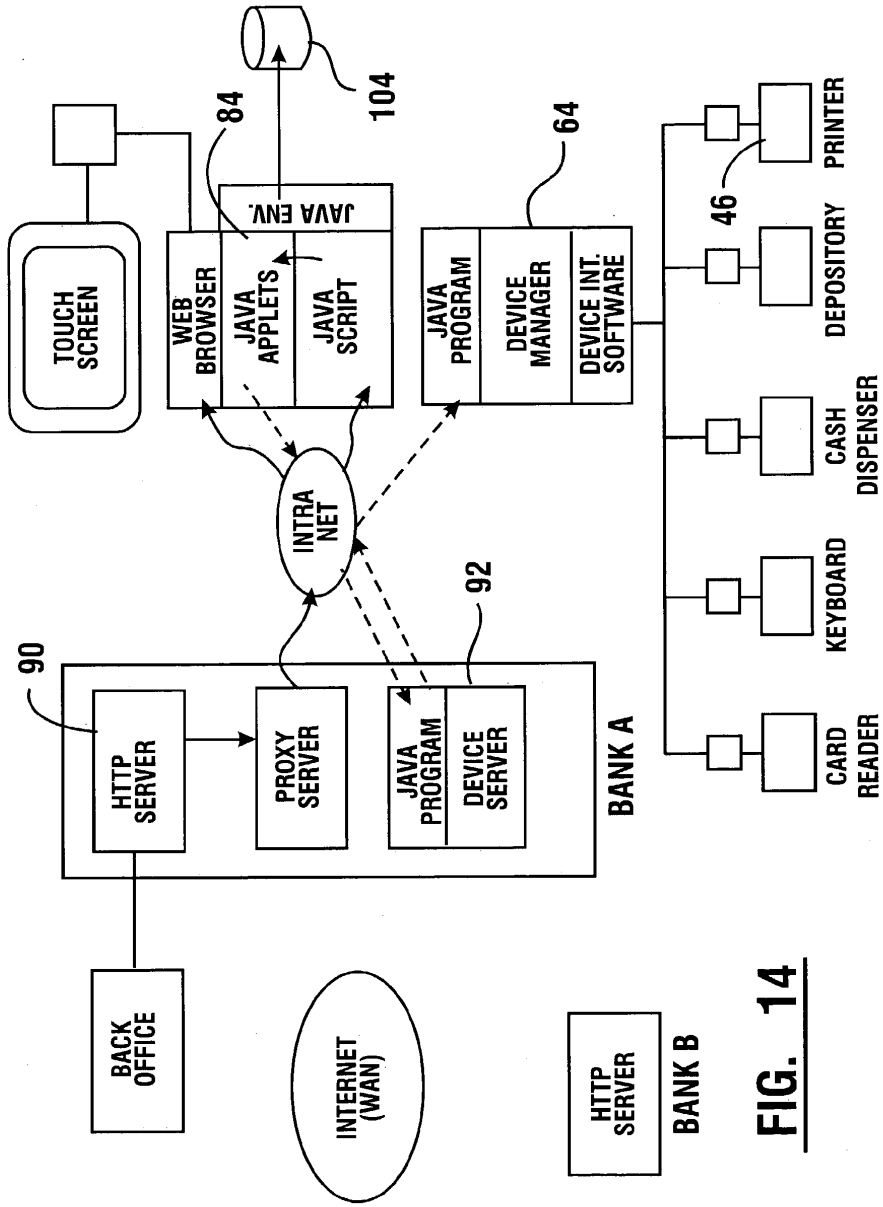
TOUCH SCREEN
WEB BROWSER
JAVA APPLETS
JAVA SCRIPT
JAVA ENV.
84
104
JAVA PROGRAM
DEVICE MANAGER
DEVICE INT. SOFTWARE
64
INTRA NET
92
90
HTTP SERVER
PROXY SERVER
JAVA PROGRAM
DEVICE SERVER
BANK A
BACK OFFICE
INTERNET (WAN)
HTTP SERVER
BANK B
46
PRINTER
DEPOSITORY
CASH DISPENSER
KEYBOARD
CARD READER

FIG. 14

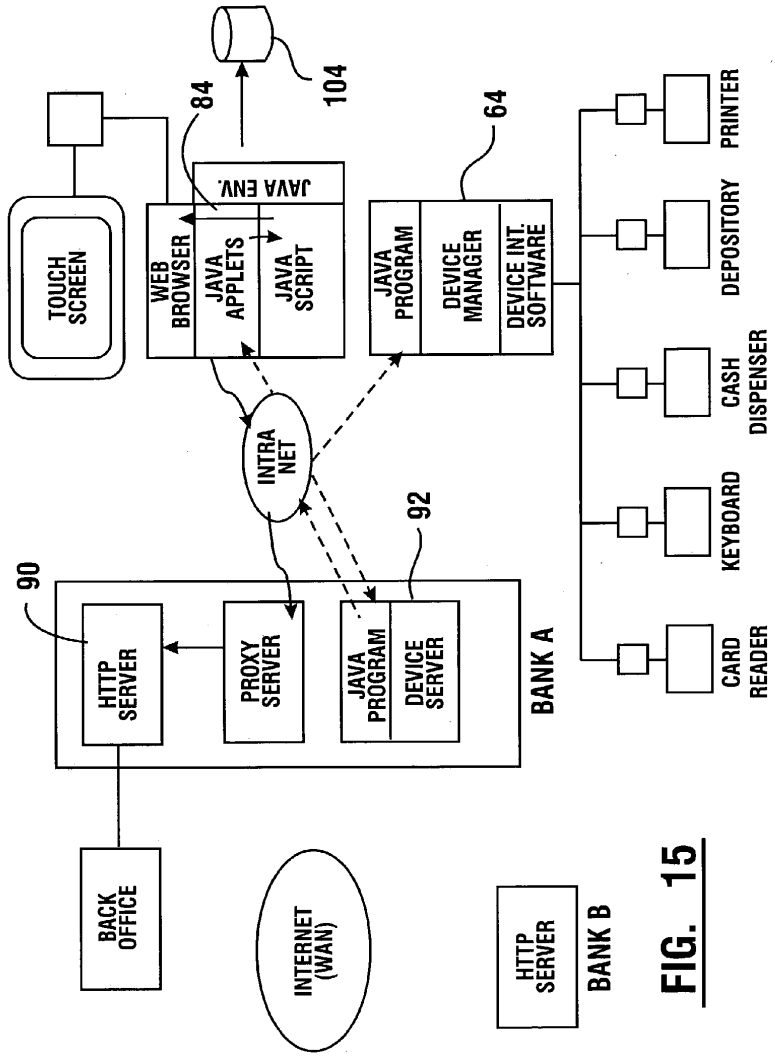
TOUCH SCREEN
WEB BROWSER
JAVA APPLETS
JAVA SCRIPT
JAVA ENV.
84
104
JAVA PROGRAM
DEVICE MANAGER
DEVICE INT. SOFTWARE
64
PRINTER
DEPOSITORY
CASH DISPENSER
KEYBOARD
CARD READER
INTRA NET
92
90
HTTP SERVER
PROXY SERVER
JAVA PROGRAM
DEVICE SERVER
BANK A
BACK OFFICE
INTERNET (WAN)
HTTP SERVER
BANK B

FIG. 15

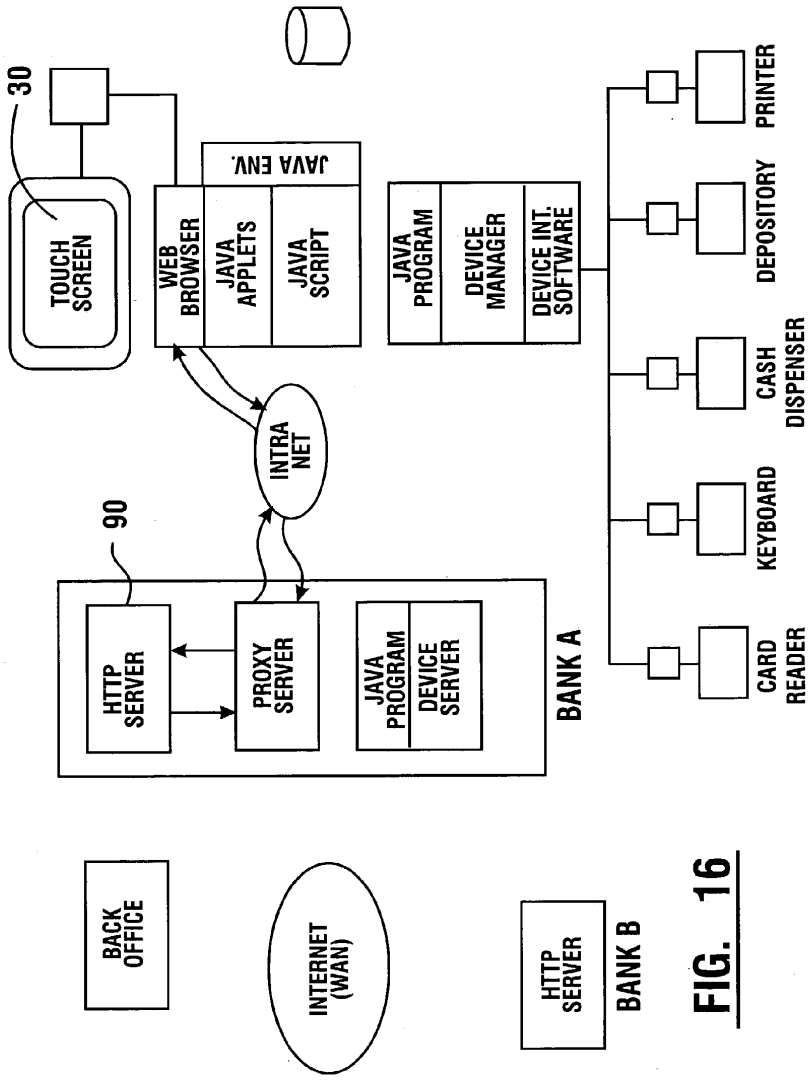
30
TOUCH SCREEN
WEB BROWSER
JAVA APPLETS
JAVA SCRIPT
JAVA ENV.
JAVA PROGRAM
DEVICE MANAGER
DEVICE INT. SOFTWARE
PRINTER
DEPOSITORY
CASH DISPENSER
KEYBOARD
CARD READER
INTRA NET
90
HTTP SERVER
PROXY SERVER
JAVA PROGRAM
DEVICE SERVER
BANK A
BACK OFFICE
INTERNET (WAN)
HTTP SERVER
BANK B

FIG. 16

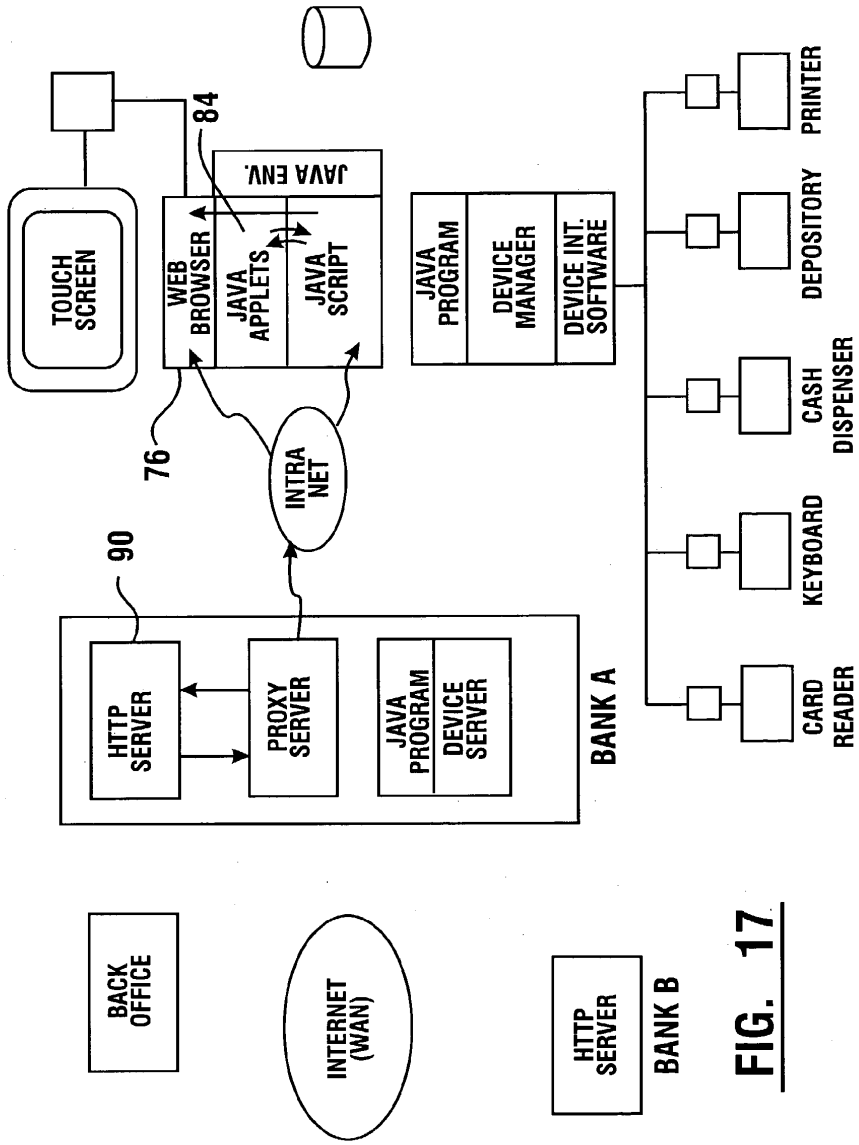
TOUCH SCREEN
WEB BROWSER
JAVA APPLETS
JAVA SCRIPT
JAVA ENV.
84
76
INTRA NET
90
HTTP SERVER
PROXY SERVER
JAVA PROGRAM
DEVICE SERVER
BANK A
JAVA PROGRAM
DEVICE MANAGER
DEVICE INT. SOFTWARE
PRINTER
DEPOSITORY
CASH DISPENSER
KEYBOARD
CARD READER
BACK OFFICE
INTERNET (WAN)
HTTP SERVER
BANK B

FIG. 17

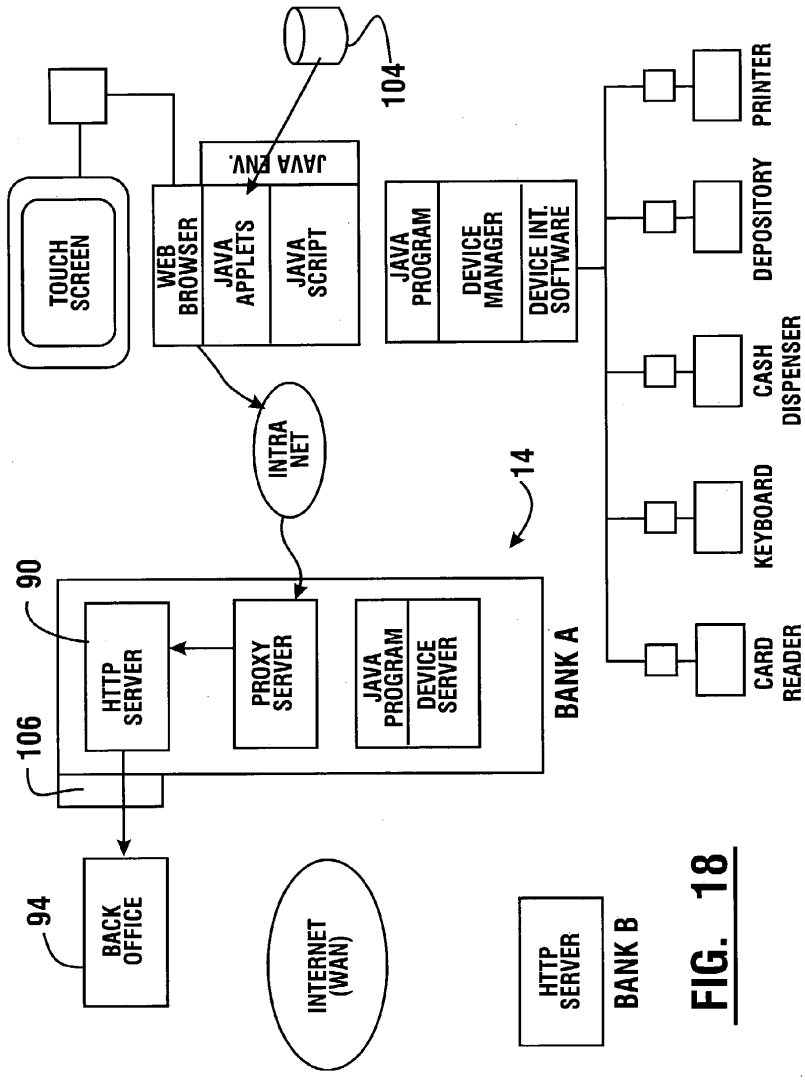
TOUCH SCREEN
WEB BROWSER
JAVA APPLETS
JAVA SCRIPT
JAVA ENV.
104
JAVA PROGRAM
DEVICE MANAGER
DEVICE INT. SOFTWARE
PRINTER
DEPOSITORY
CASH DISPENSER
KEYBOARD
CARD READER
INTRA NET
14
90
106
HTTP SERVER
PROXY SERVER
JAVA PROGRAM
DEVICE SERVER
BANK A
94
BACK OFFICE
INTERNET (WAN)
HTTP SERVER
BANK B

FIG. 18

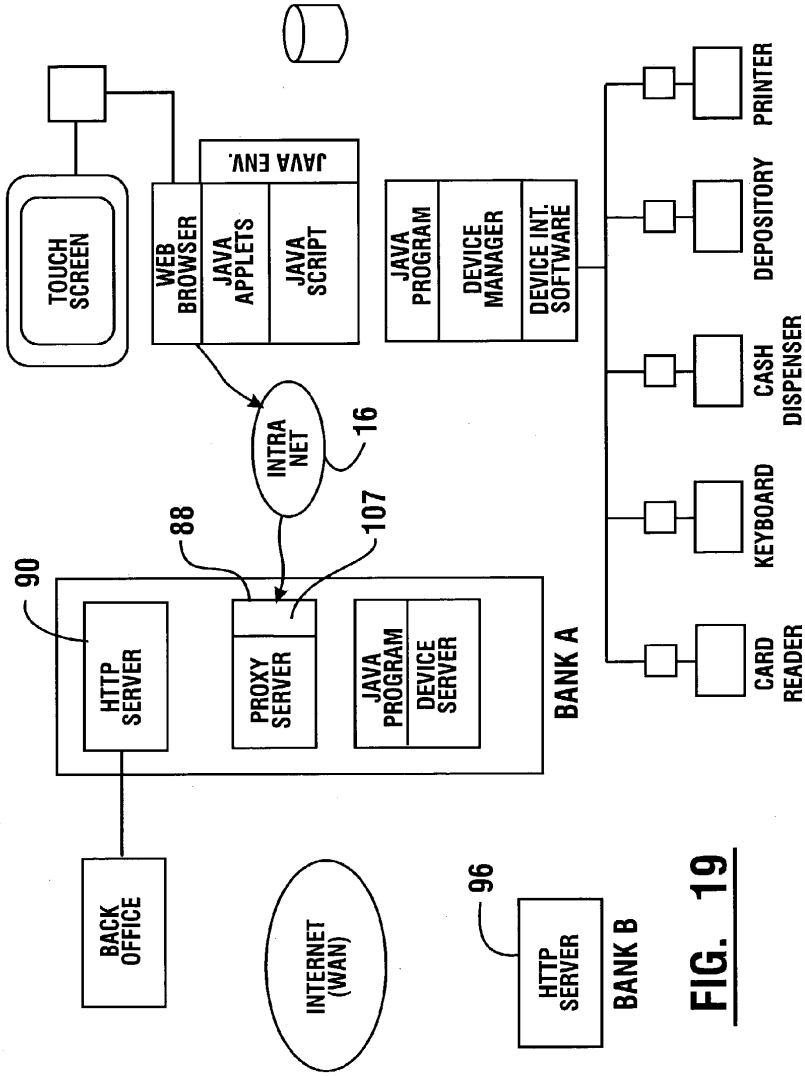
TOUCH SCREEN
WEB BROWSER
JAVA APPLETS
JAVA SCRIPT
JAVA ENV.
JAVA PROGRAM
DEVICE MANAGER
DEVICE INT. SOFTWARE
PRINTER
DEPOSITORY
CASH DISPENSER
KEYBOARD
CARD READER
INTRA NET
16
88
107
90
HTTP SERVER
PROXY SERVER
JAVA PROGRAM
DEVICE SERVER
BANK A
BACK OFFICE
INTERNET (WAN)
96
HTTP SERVER
BANK B

FIG. 19

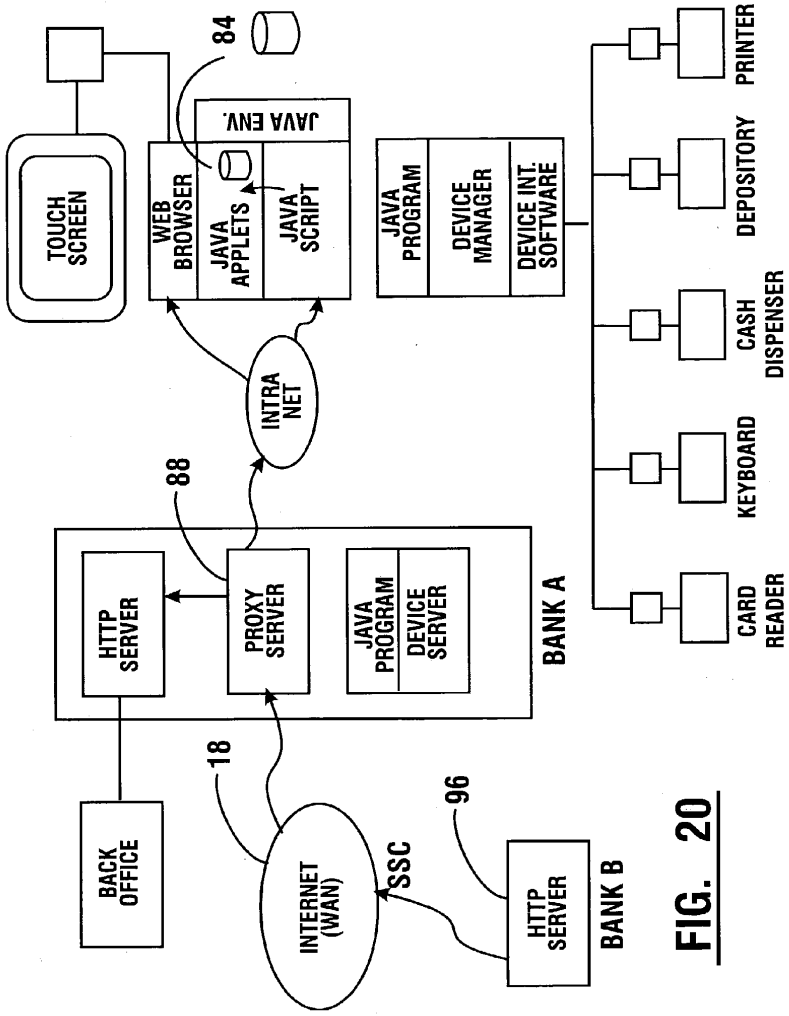
TOUCH SCREEN
84
JAVA ENV.
WEB BROWSER
JAVA APPLETS
JAVA SCRIPT
JAVA PROGRAM
DEVICE MANAGER
DEVICE INT. SOFTWARE
PRINTER
DEPOSITORY
CASH DISPENSER
KEYBOARD
CARD READER
INTRA NET
88
HTTP SERVER
PROXY SERVER
JAVA PROGRAM
DEVICE SERVER
BANK A
18
BACK OFFICE
INTERNET (WAN)
SSC
96
HTTP SERVER
BANK B

FIG. 20

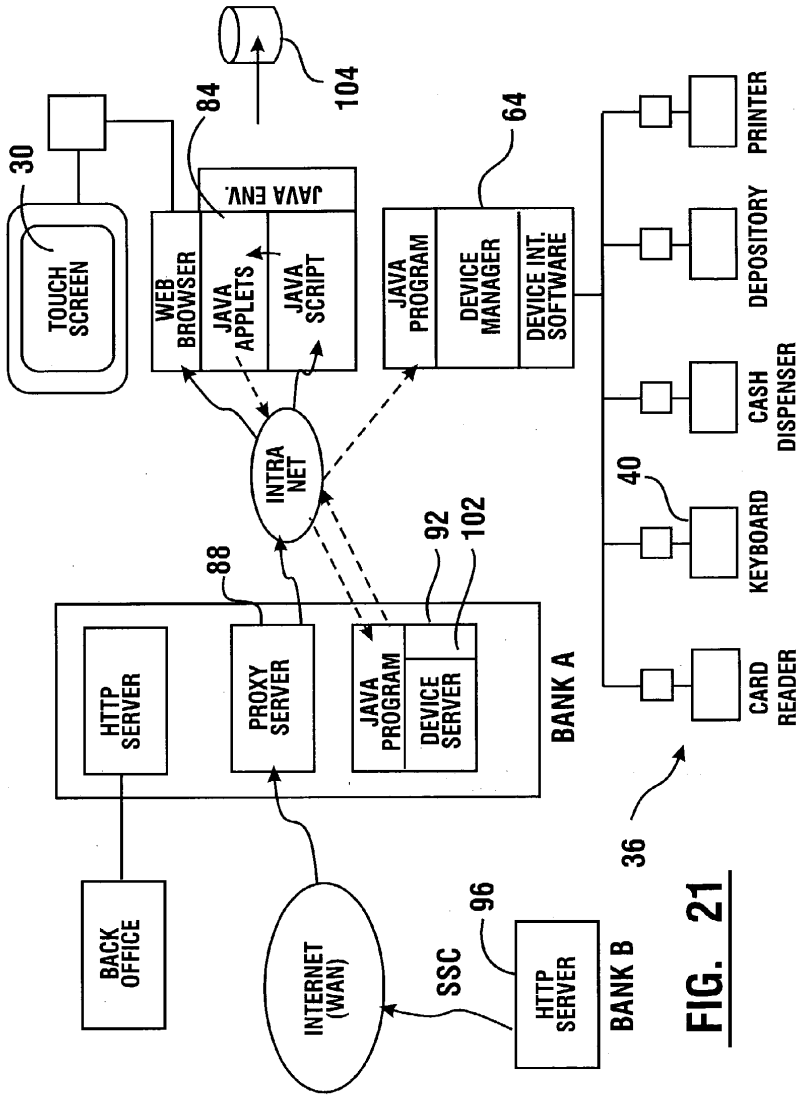
30
TOUCH SCREEN
84
WEB BROWSER
JAVA APPLETS
JAVA SCRIPT
JAVA ENV.
104
64
JAVA PROGRAM
DEVICE MANAGER
DEVICE INT. SOFTWARE
PRINTER
DEPOSITORY
CASH DISPENSER
KEYBOARD
CARD READER
40
36
INTRA NET
88
92
102
HTTP SERVER
PROXY SERVER
JAVA PROGRAM
DEVICE SERVER
BANK A
BACK OFFICE
INTERNET (WAN)
SSC
96
HTTP SERVER
BANK B

FIG. 21

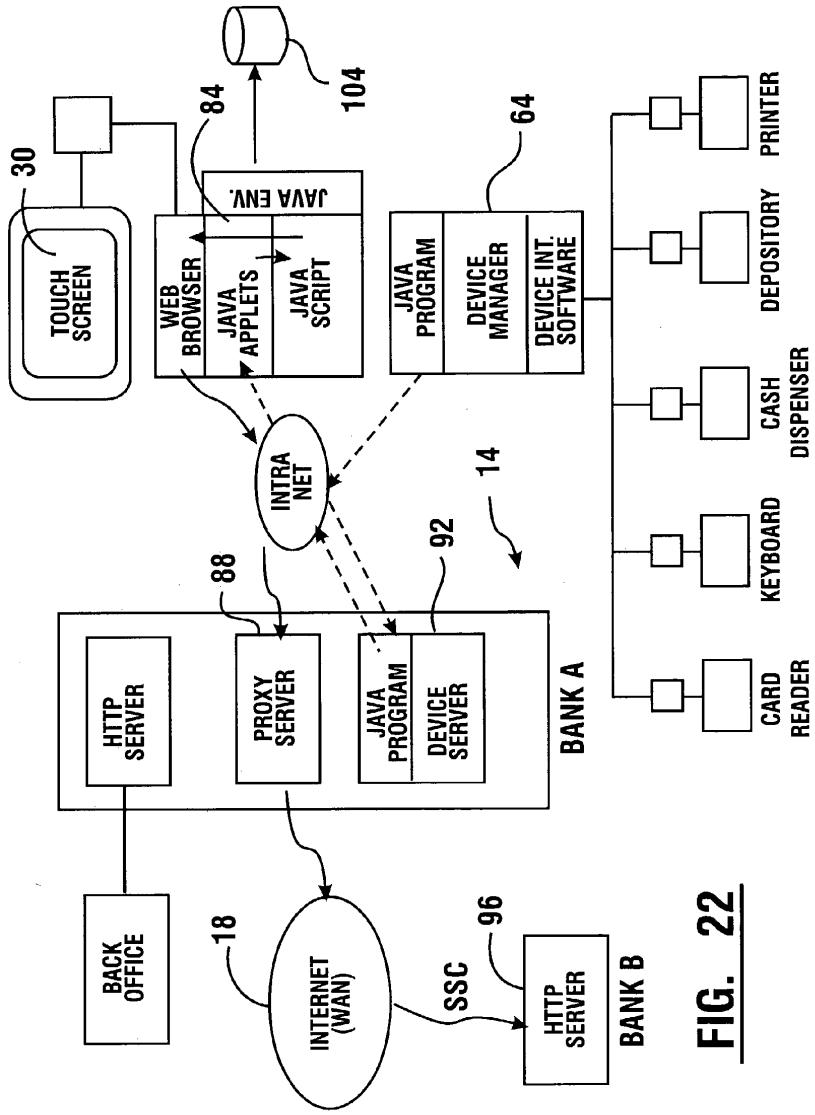
30
TOUCH SCREEN
84
WEB BROWSER
JAVA APPLETS
JAVA SCRIPT
JAVA ENV.
104
64
JAVA PROGRAM
DEVICE MANAGER
DEVICE INT. SOFTWARE
PRINTER
DEPOSITORY
CASH DISPENSER
KEYBOARD
CARD READER
INTRA NET
14
88
92
HTTP SERVER
PROXY SERVER
JAVA PROGRAM
DEVICE SERVER
BANK A
BACK OFFICE
18
INTERNET (WAN)
SSC
96
HTTP SERVER
BANK B

FIG. 22

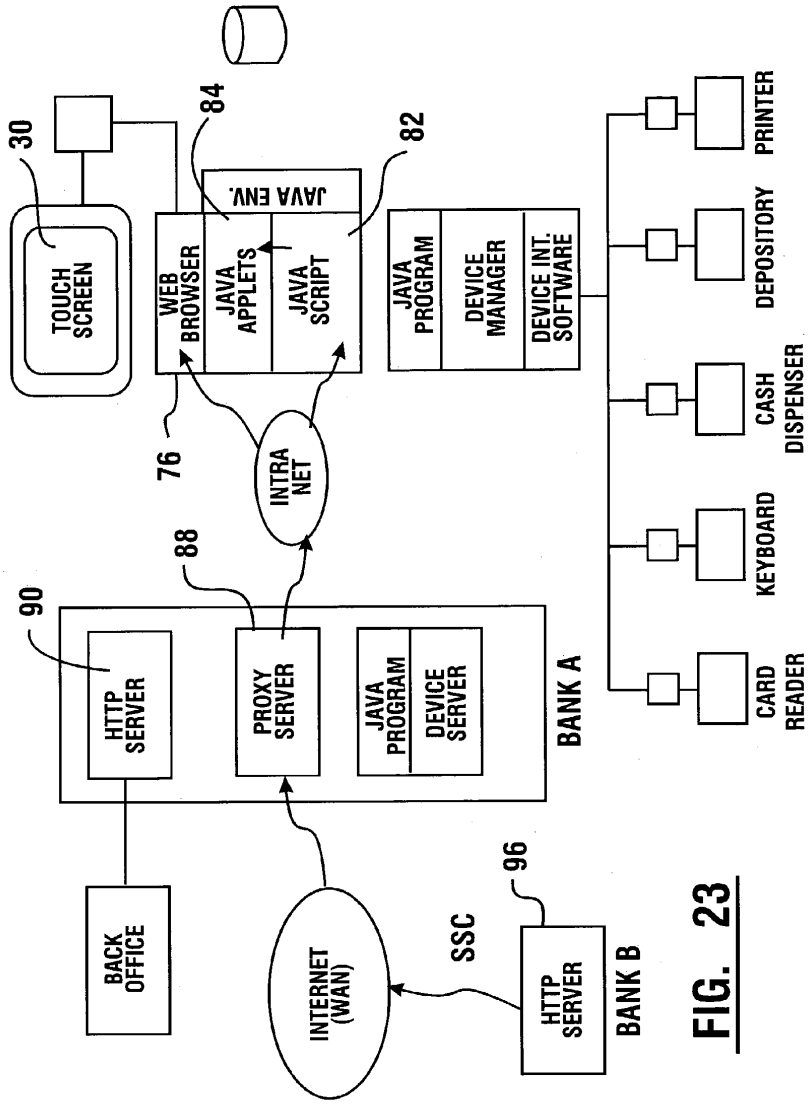
30
TOUCH SCREEN
84
JAVA ENV.
WEB BROWSER
JAVA APPLETS
JAVA SCRIPT
82
JAVA PROGRAM
DEVICE MANAGER
DEVICE INT. SOFTWARE
PRINTER
DEPOSITORY
CASH DISPENSER
KEYBOARD
CARD READER
76
INTRA NET
88
90
HTTP SERVER
PROXY SERVER
JAVA PROGRAM
DEVICE SERVER
BANK A
BACK OFFICE
INTERNET (WAN)
SSC
96
HTTP SERVER
BANK B

FIG. 23

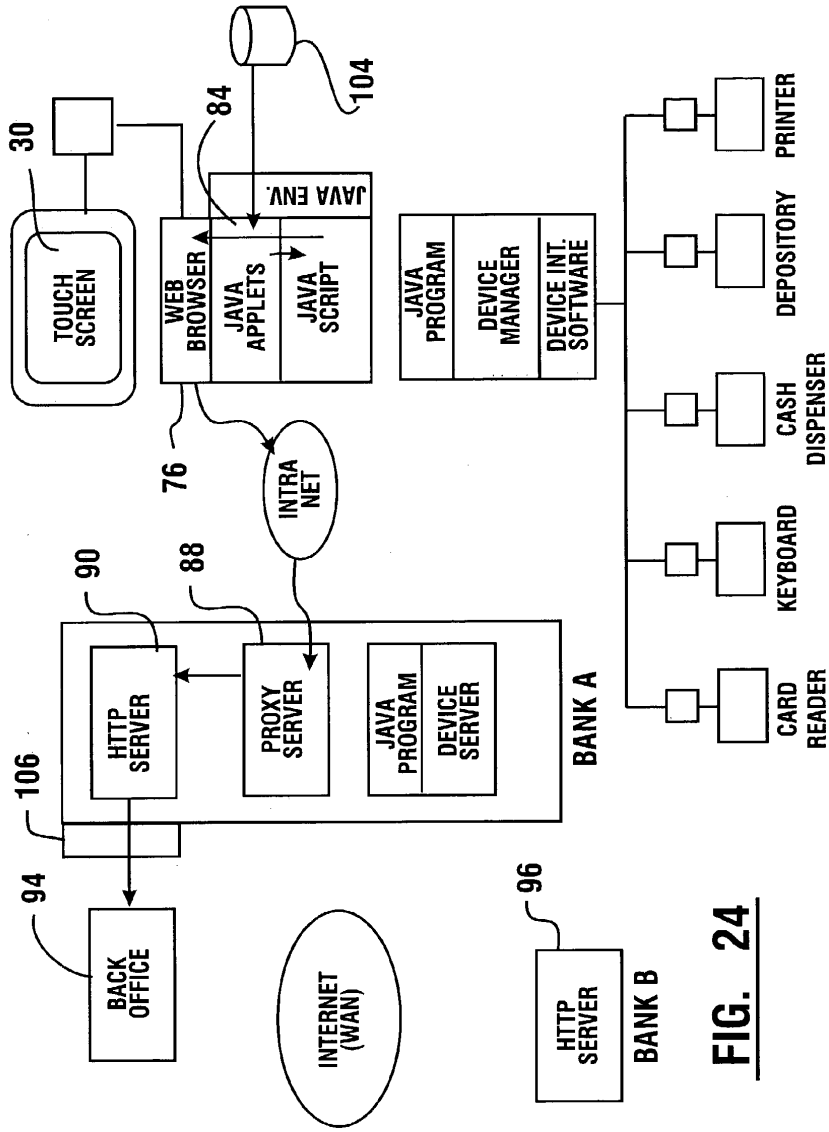
30
TOUCH SCREEN
84
104
JAVA ENV.
WEB BROWSER
JAVA APPLETS
JAVA SCRIPT
76
INTRA NET
JAVA PROGRAM
DEVICE MANAGER
DEVICE INT. SOFTWARE
PRINTER
DEPOSITORY
CASH DISPENSER
KEYBOARD
CARD READER
90
88
106
HTTP SERVER
PROXY SERVER
JAVA PROGRAM
DEVICE SERVER
BANK A
94
BACK OFFICE
INTERNET (WAN)
96
HTTP SERVER
BANK B

FIG. 24

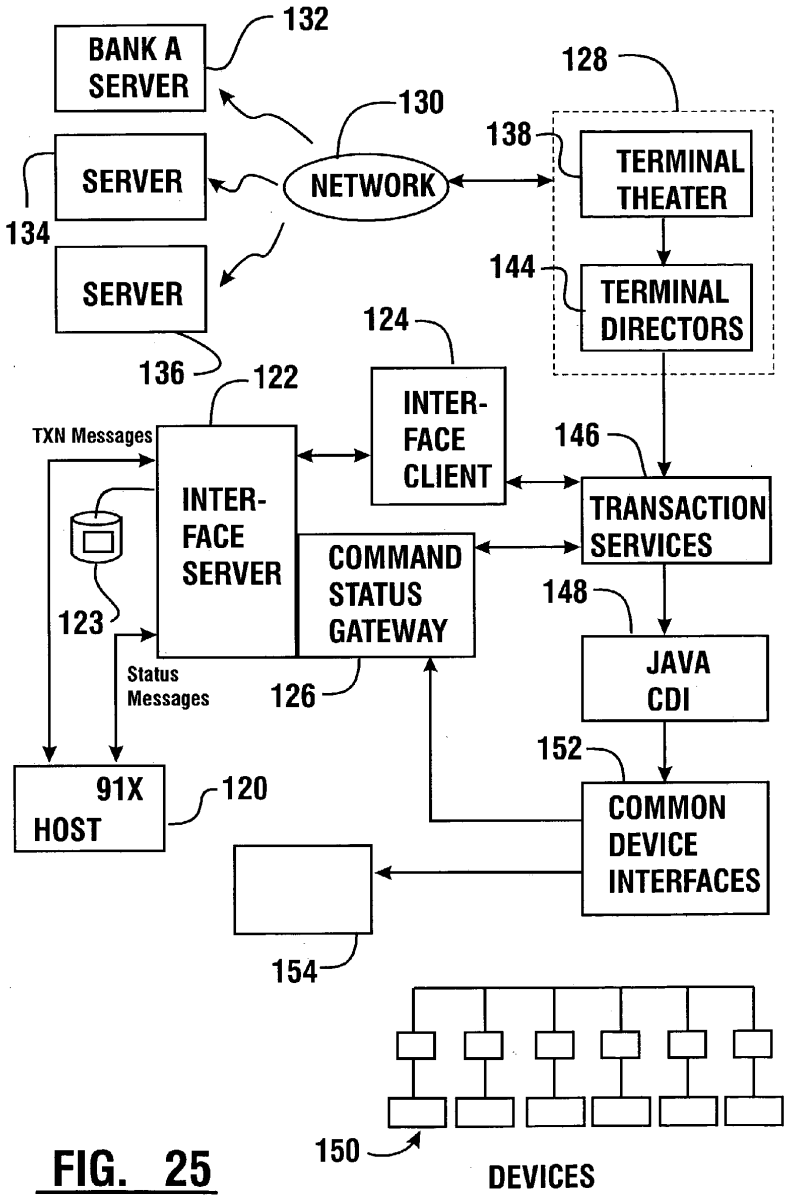
BANK A SERVER
132
128
130
138
TERMINAL THEATER
SERVER
NETWORK
134
SERVER
144
TERMINAL DIRECTORS
124
136
122
INTER-FACE CLIENT
TXN Messages
146
INTER-FACE SERVER
TRANSACTION SERVICES
COMMAND STATUS GATEWAY
123
148
JAVA CDI
Status Messages
126
152
91X HOST
120
COMMON DEVICE INTERFACES
154
150
DEVICES

FIG. 25

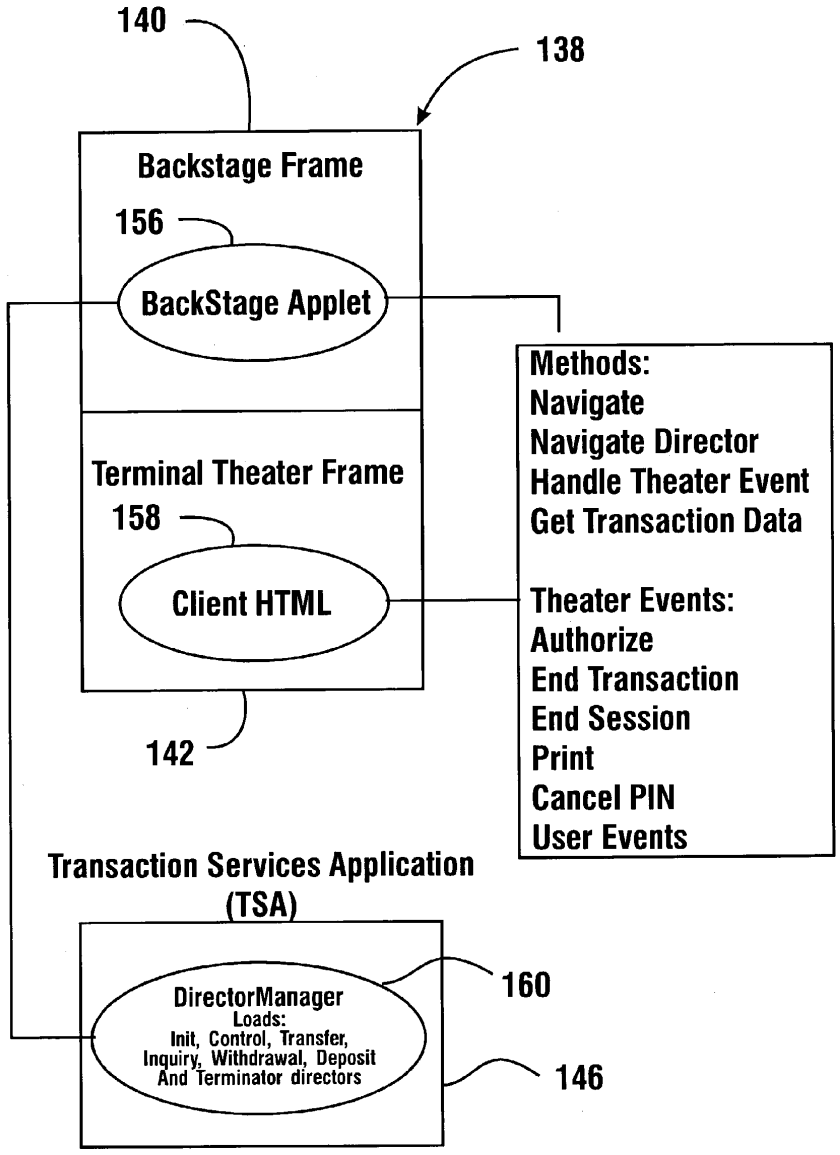
140
138
Backstage Frame
156
BackStage Applet
Terminal Theater Frame
158
Client HTML
142
Methods:
Navigate
Navigate Director
Handle Theater Event
Get Transaction Data
Theater Events:
Authorize
End Transaction
End Session
Print
Cancel PIN
User Events
Transaction Services Application
(TSA)
DirectorManager
Loads:
Init, Control, Transfer,
Inquiry, Withdrawal, Deposit
And Terminator directors
160
146

FIG. 26

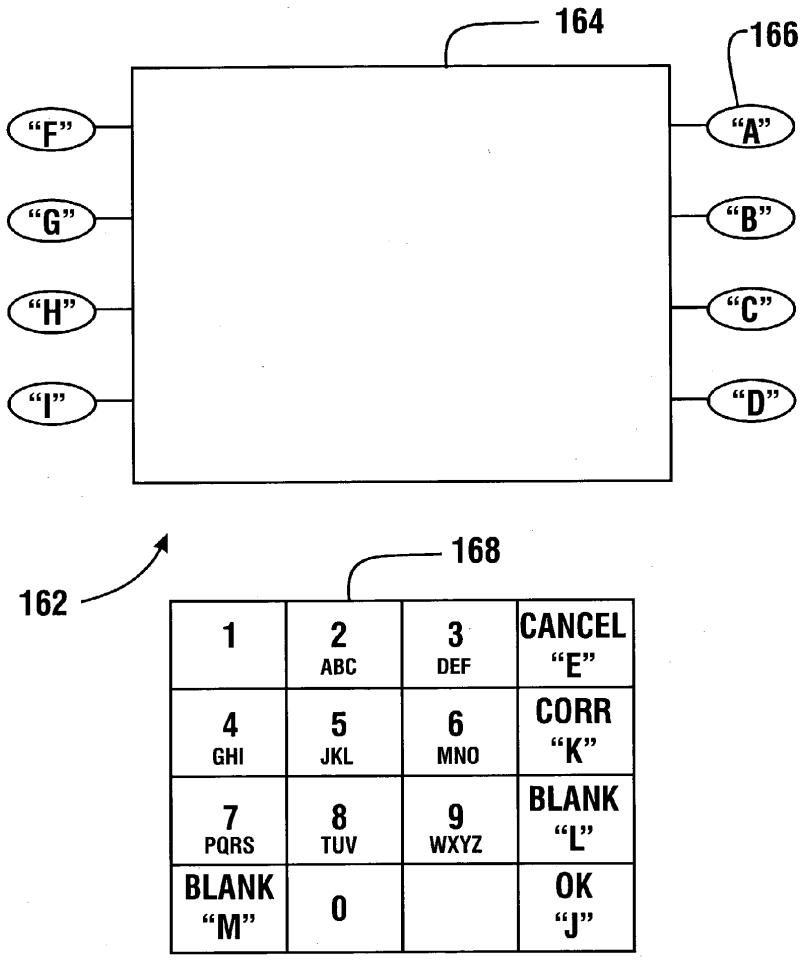
164
166
"F"
"G"
"H"
"I"
"A"
"B"
"C"
"D"
162
168
1
2 ABC
3 DEF
CANCEL "E"
4 GHI
5 JKL
6 MNO
CORR "K"
7 PQRS
8 TUV
9 WXYZ
BLANK "L"
BLANK "M"
0
OK "J"

FIG. 27

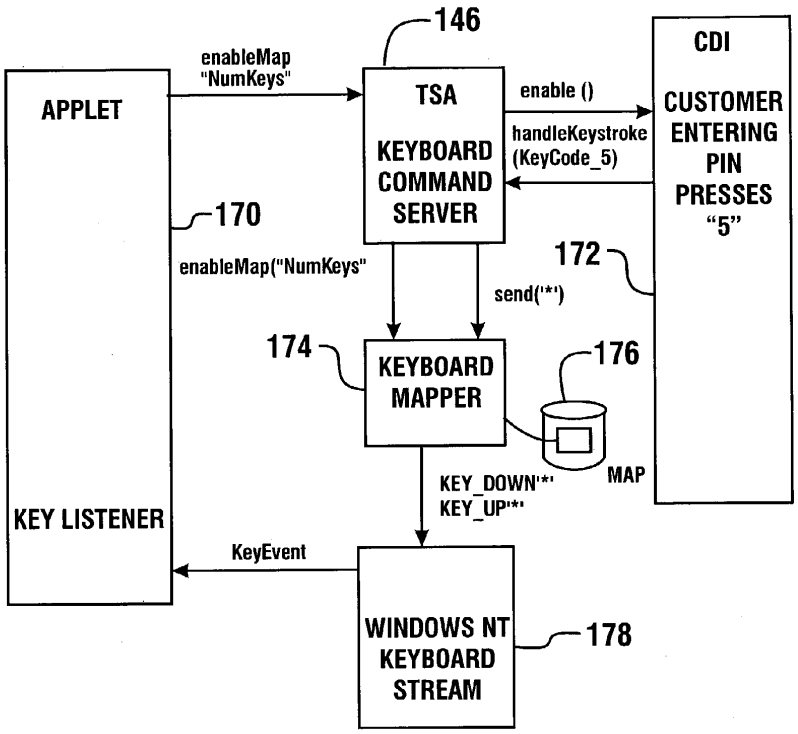
146
enableMap
"NumKeys"
APPLET
TSA
KEYBOARD
COMMAND
SERVER
enable ()
handleKeystroke
(KeyCode_5)
CDI
CUSTOMER
ENTERING
PIN
PRESSES
"5"
170
enableMap("NumKeys"
172
send('*')
174
KEYBOARD
MAPPER
176
MAP
KEY_DOWN'*'
KEY_UP'*'
KEY LISTENER
KeyEvent
WINDOWS NT
KEYBOARD
STREAM
178

FIG. 28

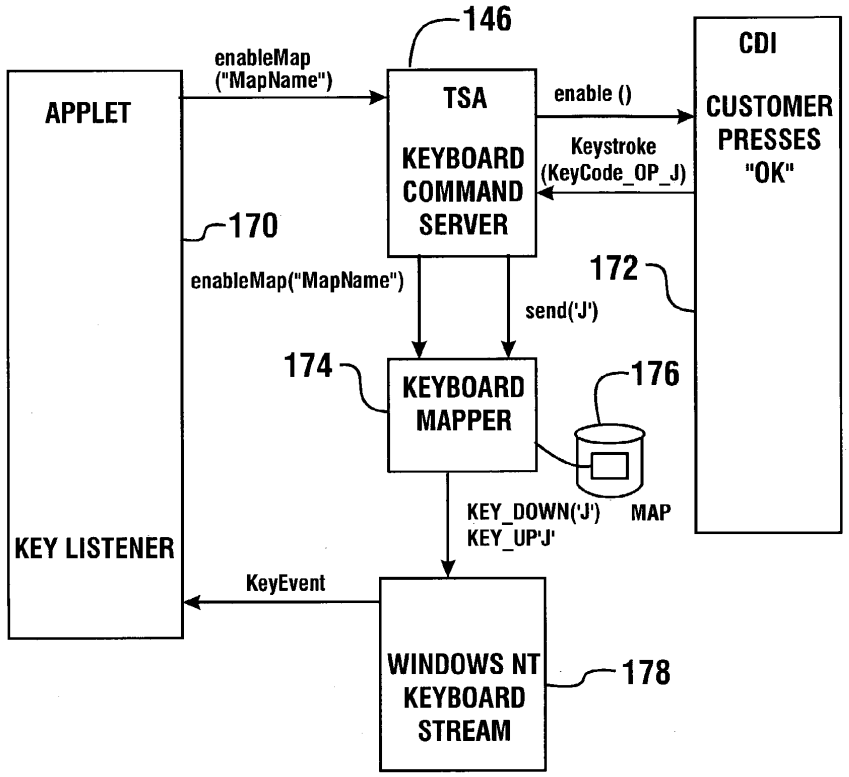
146
enableMap
("MapName")
APPLET
TSA
KEYBOARD
COMMAND
SERVER
enable ()
CDI
CUSTOMER
PRESSES
"OK"
Keystroke
(KeyCode_OP_J)
170
enableMap("MapName")
172
send('J')
174
KEYBOARD
MAPPER
176
KEY_DOWN('J')
KEY_UP'J'
MAP
KEY LISTENER
KeyEvent
WINDOWS NT
KEYBOARD
STREAM
178

FIG. 29

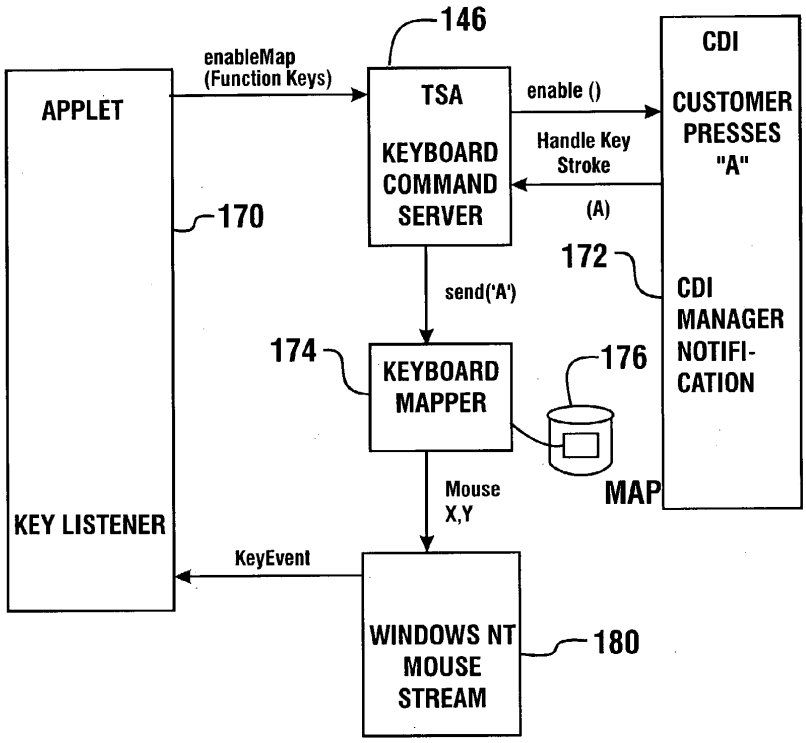
146
enableMap
(Function Keys)
APPLET
TSA
KEYBOARD
COMMAND
SERVER
enable ()
Handle Key
Stroke
(A)
CDI
CUSTOMER
PRESSES
"A"
170
172
send('A')
CDI
MANAGER
NOTIFI-
CATION
174
KEYBOARD
MAPPER
176
MAP
Mouse
X,Y
KEY LISTENER
KeyEvent
WINDOWS NT
MOUSE
STREAM
180

FIG. 30

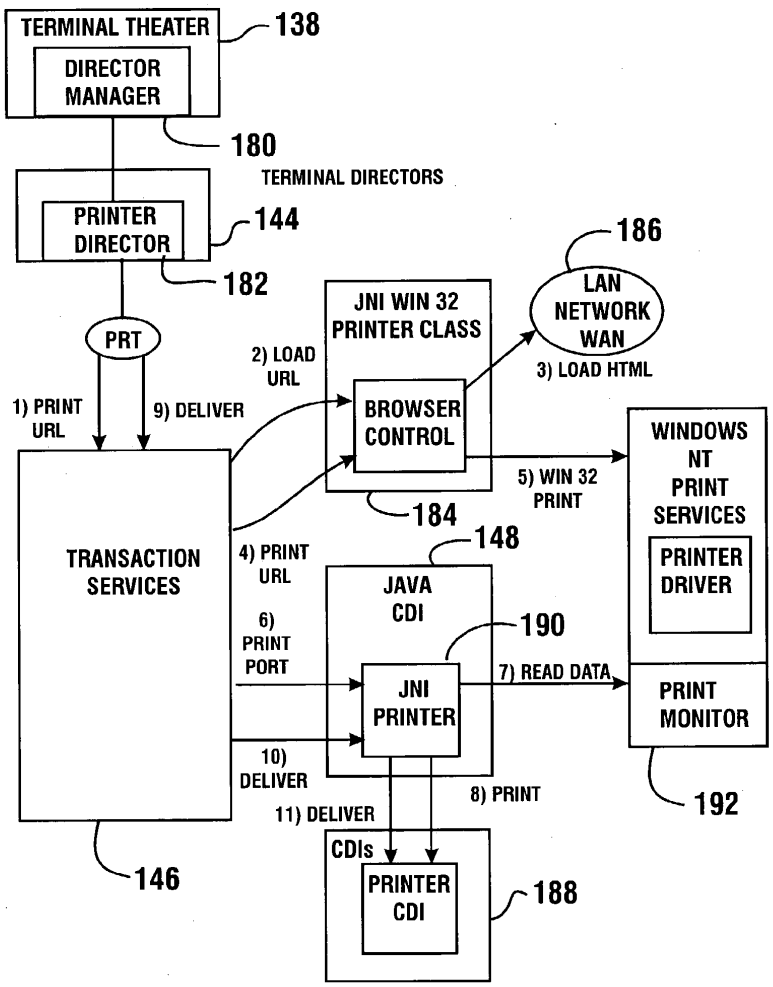
TERMINAL THEATER
138
DIRECTOR MANAGER
180
TERMINAL DIRECTORS
PRINTER DIRECTOR
144
182
PRT
1) PRINT URL
9) DELIVER
TRANSACTION SERVICES
146
JNI WIN 32 PRINTER CLASS
2) LOAD URL
BROWSER CONTROL
184
186
LAN NETWORK WAN
3) LOAD HTML
5) WIN 32 PRINT
WINDOWS NT PRINT SERVICES
PRINTER DRIVER
PRINT MONITOR
192
4) PRINT URL
148
JAVA CDI
190
6) PRINT PORT
JNI PRINTER
7) READ DATA
10) DELIVER
8) PRINT
11) DELIVER
CDIs
PRINTER CDI
188

FIG. 31

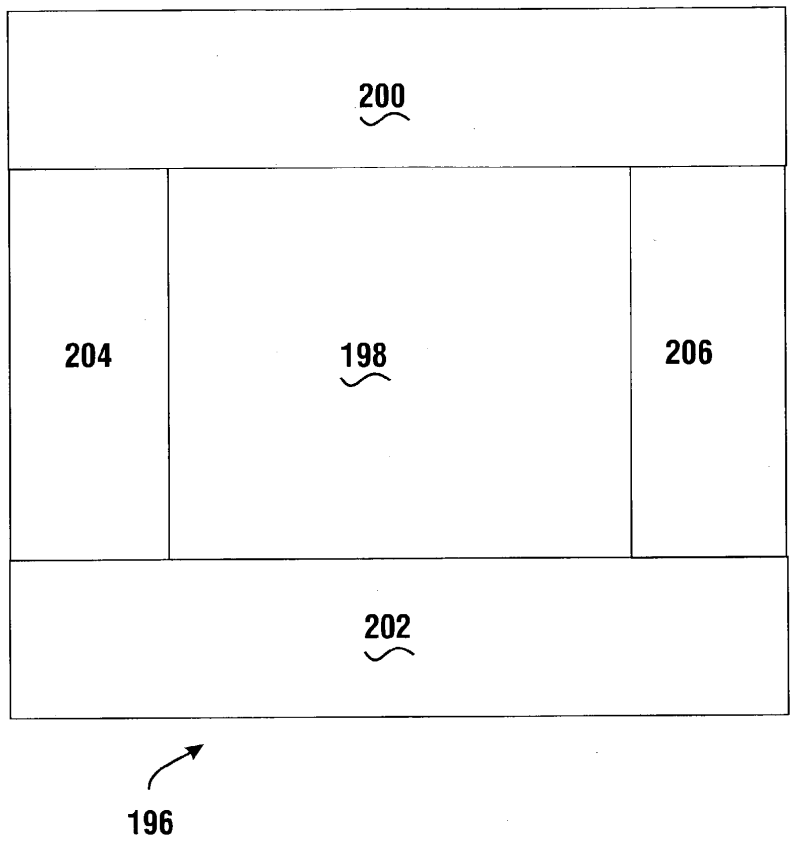

FIG. 32

Early Warning
IPR2024-01221
Ex. 1008-33

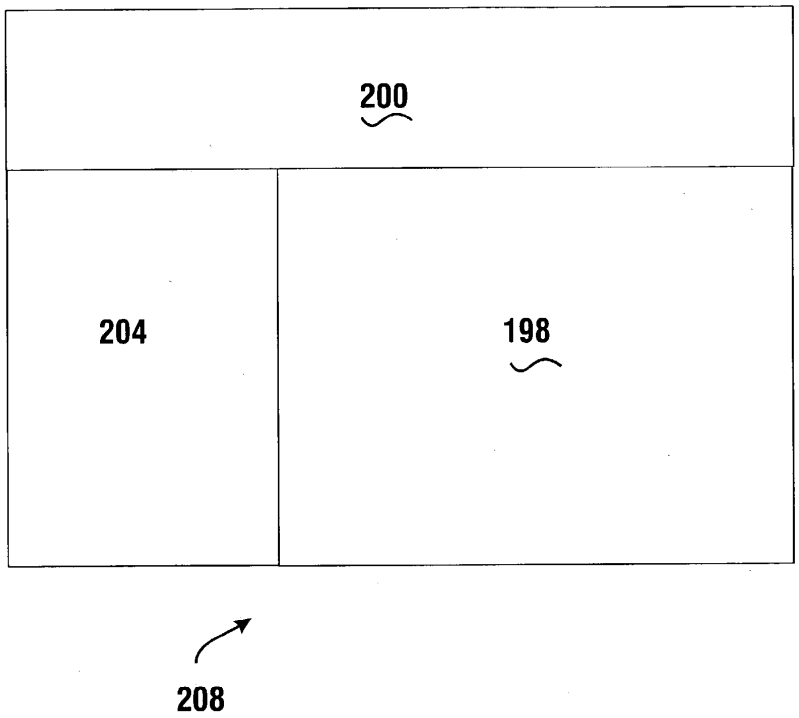

FIG. 33

Early Warning
IPR2024-01221
Ex. 1008-34

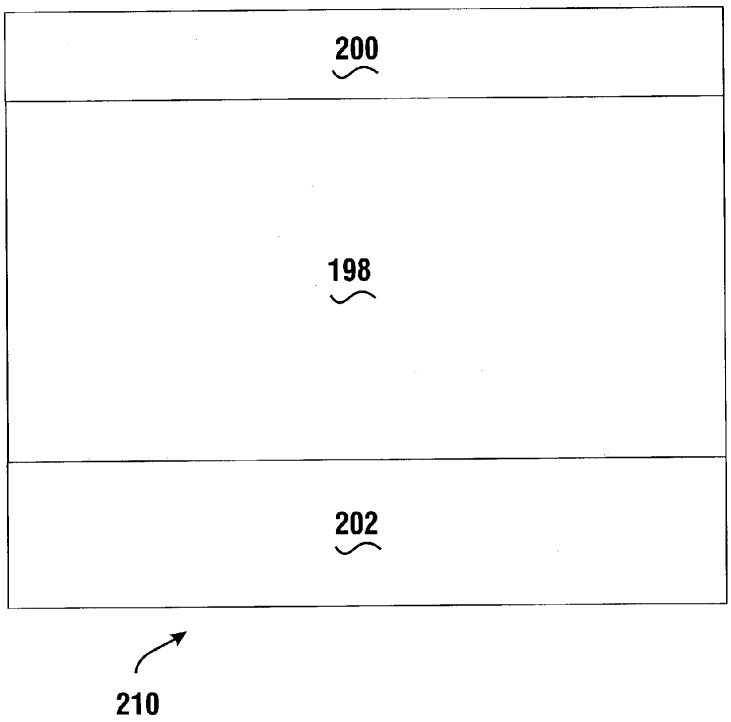

FIG. 34

Early Warning
IPR2024-01221
Ex. 1008-35

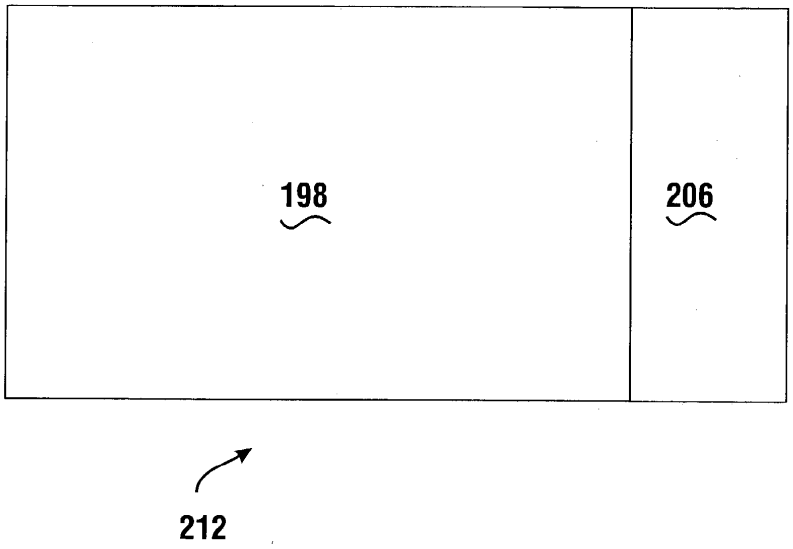

FIG. 35

Early Warning
IPR2024-01221
Ex. 1008-36

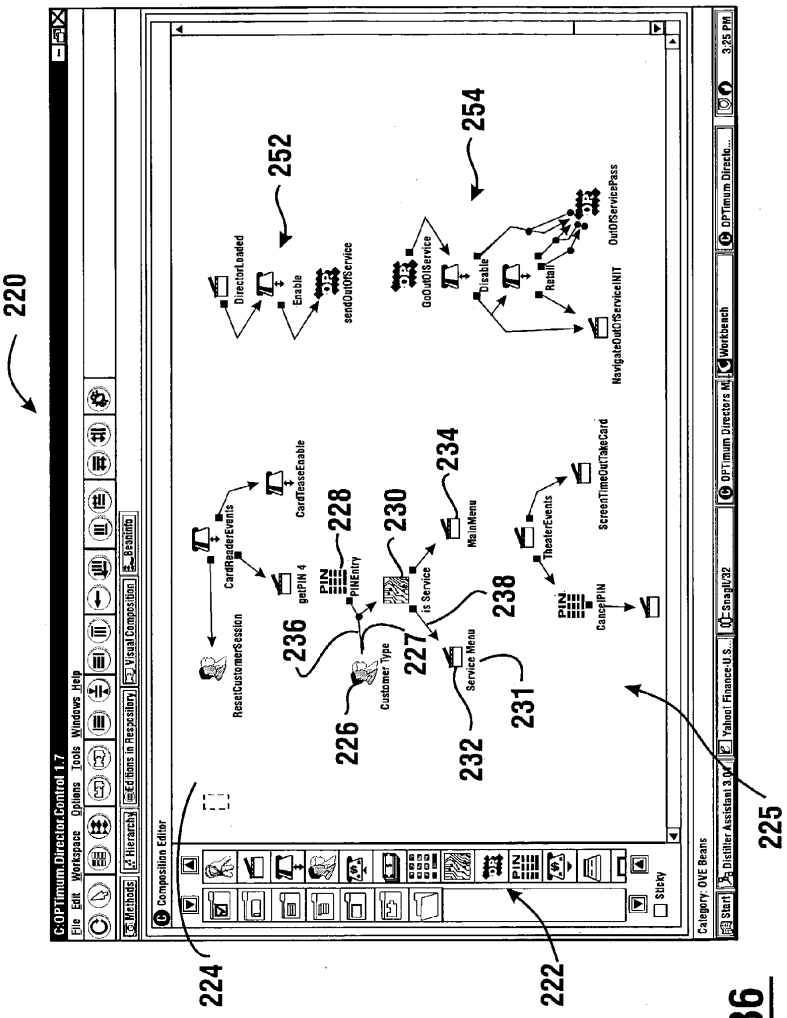
220
224
222
225
226
227
228
230
231
232
234
236
238
252
254
Composition Editor
ResetCustomerSession
CardReaderEvents
CardTraceEnable
getPIN 4
PINEntry
Customer Type
is Service
Service Menu
MainMenu
TheaterEvents
ScreenTimeOutTakeCard
CancelPIN
DirectorLoaded
Enable
sendOutOfService
GoOutOfService
Disable
Retail
NavigateOutOfServiceINIT
OutOfServicePass

FIG. 36

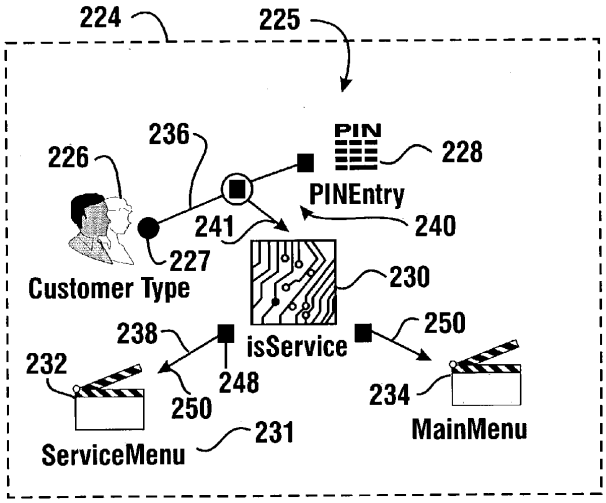
224
225
236
226
PIN
228
PINEntry
240
241
227
Customer Type
230
238
isService
250
232
248
250
234
231
ServiceMenu
MainMenu

FIG. 37

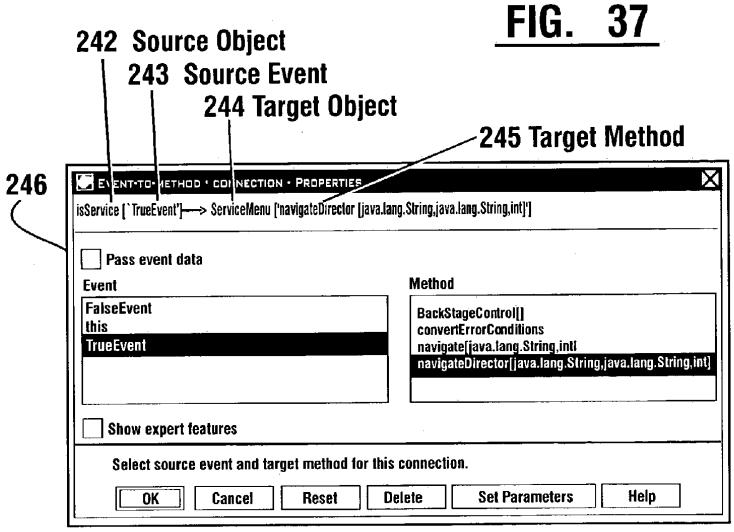
242 Source Object
243 Source Event
244 Target Object
245 Target Method
246
EVENT-TO-METHOD CONNECTION PROPERTIES
isService ["TrueEvent"] ⟶ ServiceMenu ["navigateDirector [java.lang.String,java.lang.String,int]"]
Pass event data
Event
FalseEvent
this
TrueEvent
Method
BackStageControl[]
convertErrorConditions
navigate[java.lang.String,int]
navigateDirector[java.lang.String,java.lang.String,int]
Show expert features
Select source event and target method for this connection.
OK
Cancel
Reset
Delete
Set Parameters
Help

FIG. 38

258 256

	Icon	OPTinet bean	Description
260		Authorize	Interacts with Authorization Plug-in to manage Authorization, Commit, and Reverse requests to the authorization agent.
262		BackStageControl	Uses the services of DirectorManager to control the URL property of the browser, to load directors, and to receive events from the browser.
264		CardRead	Device Control
266		Customer Profile	Interacts with the CustomerProfile Plug-ins to capture and retrieve information about a customer.
268		Depositor	Device Control
270		Dispenser	Device Control
272		Keypad	Device Control
274		Logic bean	Determines the truth value of comparisons between two operands.
276		OCS bean	Interacts with the OCS Server and the Command/Status Plug-in so that host commands and host command responses can be processed by directors.
278		Presenter	Device Control
280		PINEntry	Interacts with the PINEntryEvent Server to manage the PIN Entry mode.
282		Printer	Device Control
284		Sync	Synchronizes two forked processing paths and provides a timer for one or two processing paths.
286	NAME: ACCT: ADDR: AMOUNT: DATE:	TransactionData	Provides a repository of data that can be shared among directors, the browser, and the authorization agent.

FIG. 39

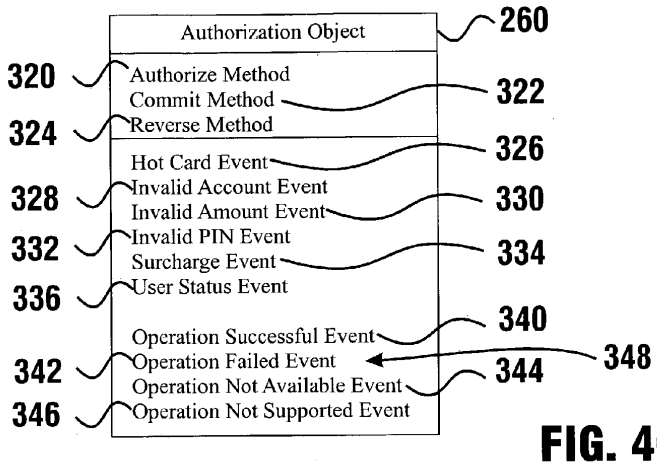
Authorization Object
260
320
Authorize Method
Commit Method
322
324
Reverse Method
Hot Card Event
326
328
Invalid Account Event
Invalid Amount Event
330
332
Invalid PIN Event
Surcharge Event
334
336
User Status Event
340
Operation Successful Event
342
Operation Failed Event
348
Operation Not Available Event
344
346
Operation Not Supported Event

FIG. 40

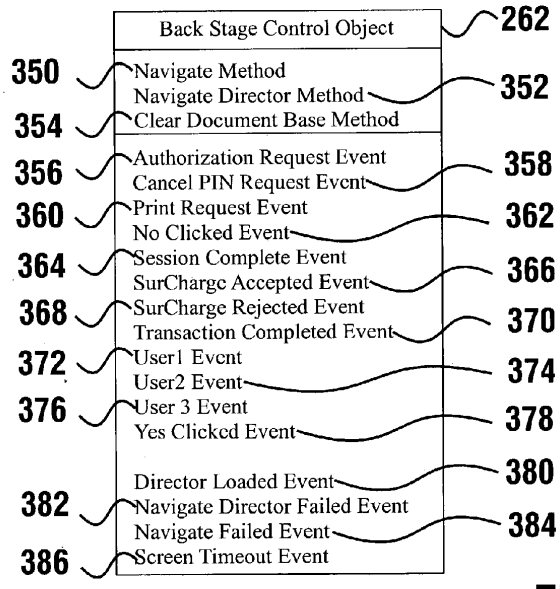
Back Stage Control Object
262
350
Navigate Method
Navigate Director Method
352
354
Clear Document Base Method
356
Authorization Request Event
Cancel PIN Request Event
358
360
Print Request Event
No Clicked Event
362
364
Session Complete Event
SurCharge Accepted Event
366
368
SurCharge Rejected Event
Transaction Completed Event
370
372
User1 Event
User2 Event
374
376
User 3 Event
Yes Clicked Event
378
Director Loaded Event
380
382
Navigate Director Failed Event
Navigate Failed Event
384
386
Screen Timeout Event

FIG. 41

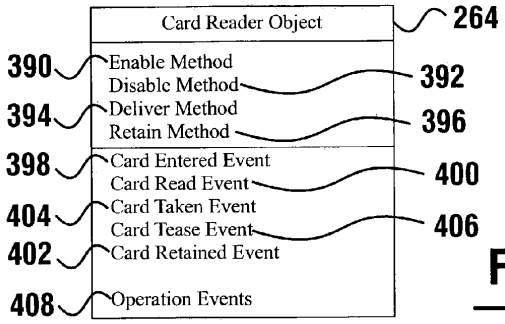

FIG. 42

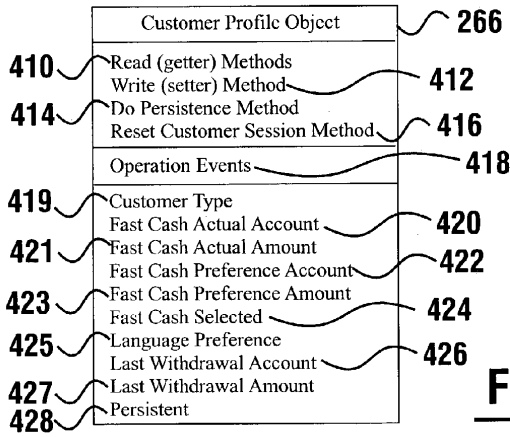

FIG. 43

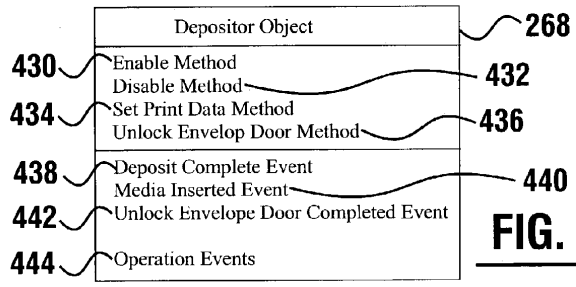

FIG. 44

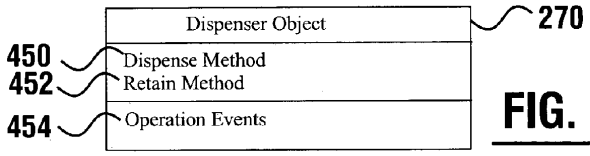

FIG. 45

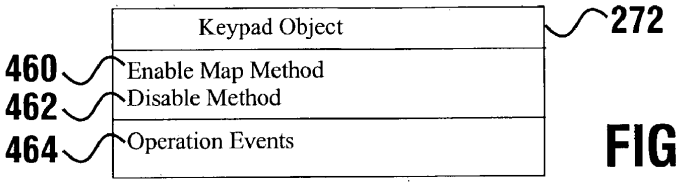

FIG. 46

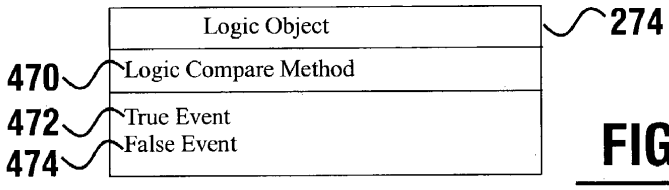

FIG. 47

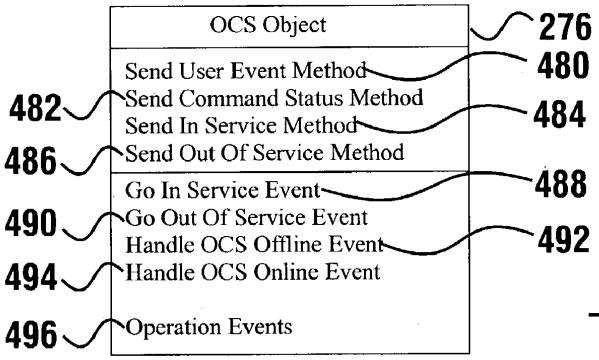

FIG. 48

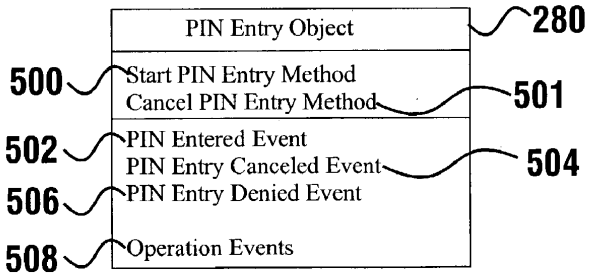

FIG. 49

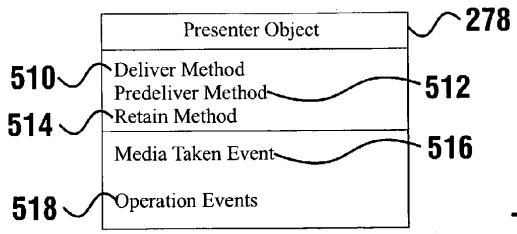

FIG. 50

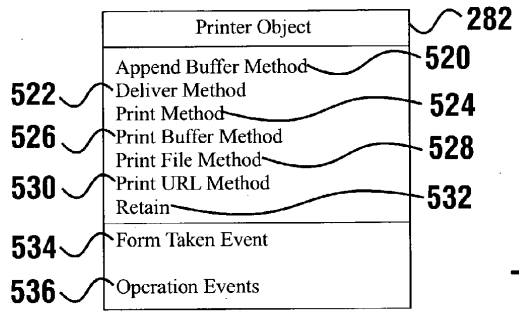

FIG. 51

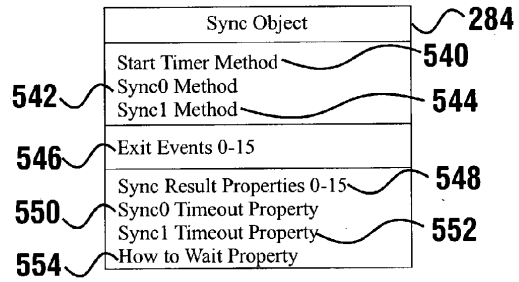

FIG. 52

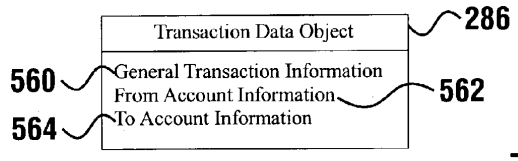

FIG. 53

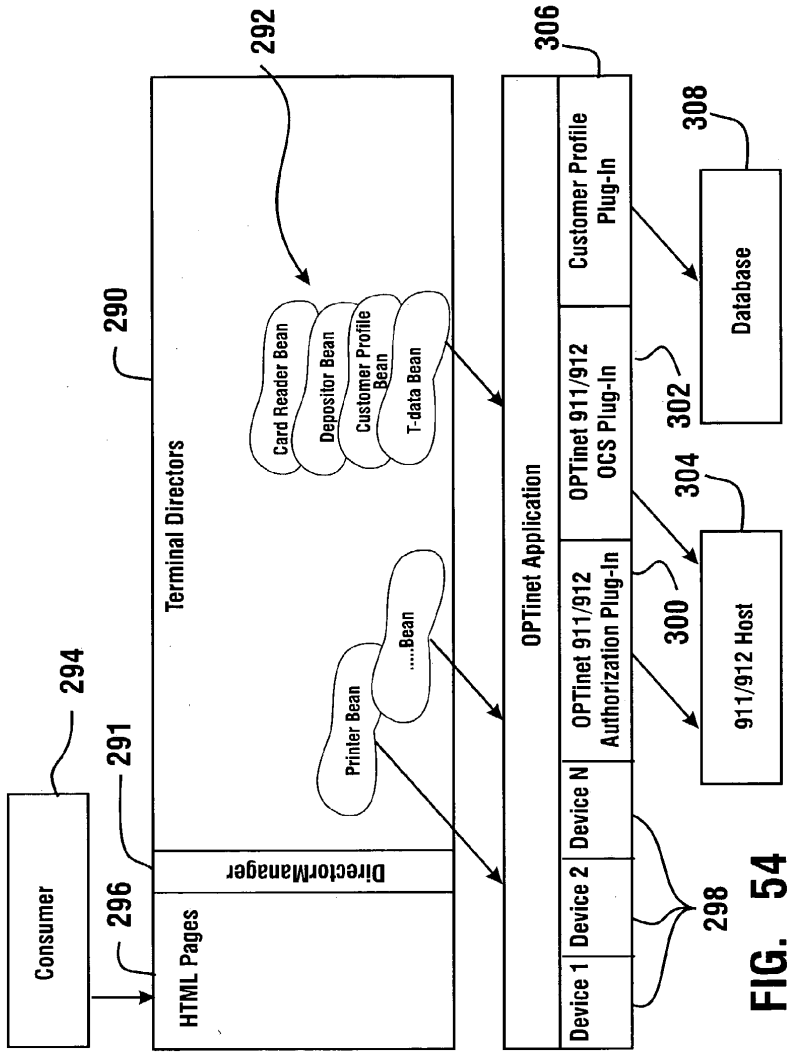
Consumer
294
296
291
HTML Pages
DirectorManager
Terminal Directors
290
292
Card Reader Bean
Depositor Bean
Customer Profile Bean
T-data Bean
Printer Bean
.....Bean
OPTinet Application
Device 1
Device 2
Device N
OPTinet 911/912 Authorization Plug-In
OPTinet 911/912 OCS Plug-In
Customer Profile Plug-In
306
300
302
304
298
Database
308
911/912 Host

FIG. 54

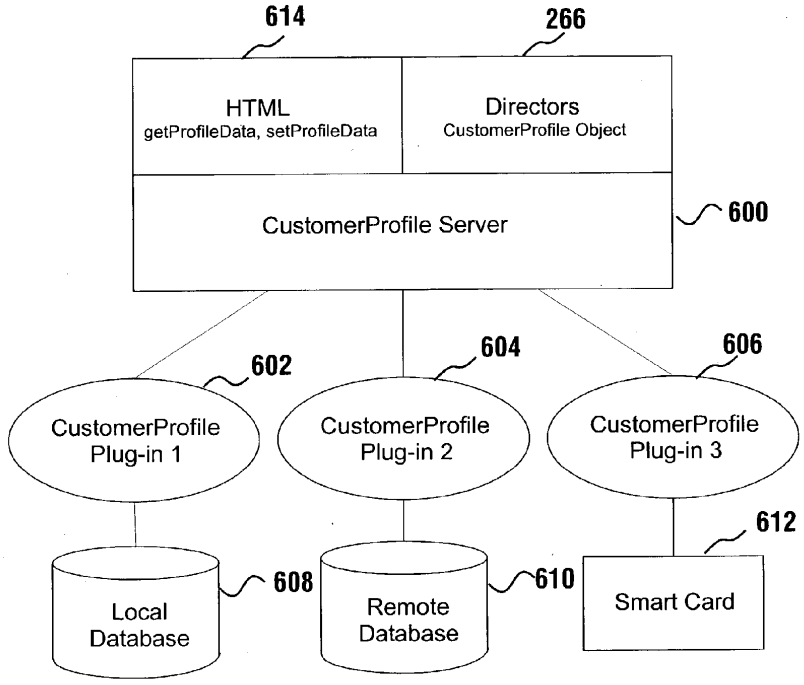
614
266
HTML
getProfileData, setProfileData
Directors
CustomerProfile Object
CustomerProfile Server
600
602
604
606
CustomerProfile
Plug-in 1
CustomerProfile
Plug-in 2
CustomerProfile
Plug-in 3
612
608
610
Local
Database
Remote
Database
Smart Card

FIG. 55

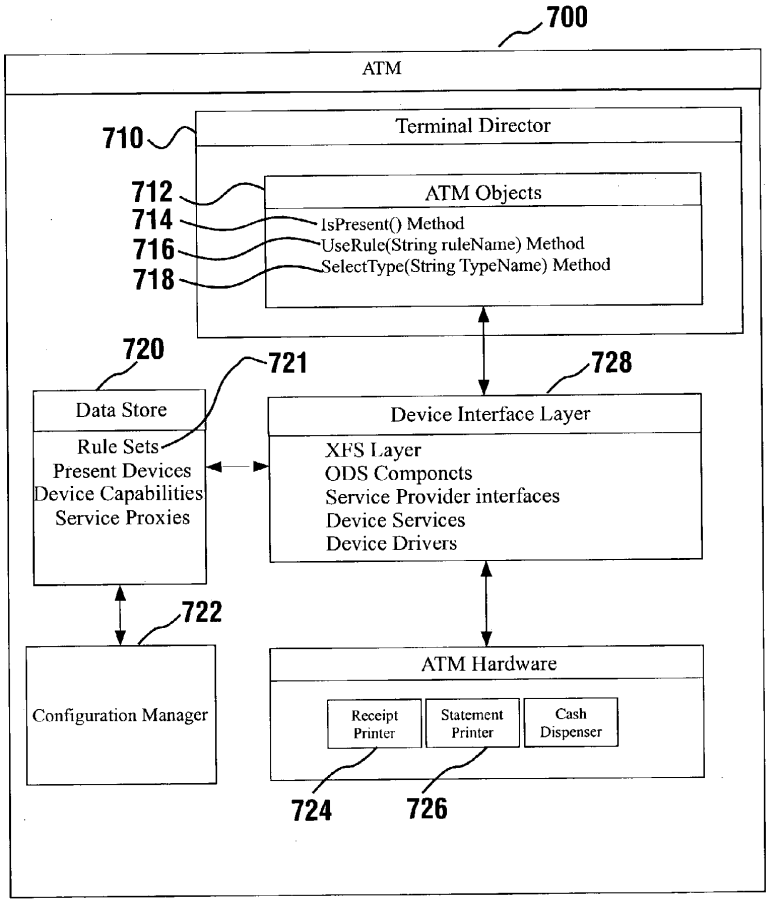
700
ATM
710
Terminal Director
712
ATM Objects
714
IsPresent() Method
716
UseRule(String ruleName) Method
718
SelectType(String TypeName) Method
720
721
728
Data Store
Rule Sets
Present Devices
Device Capabilities
Service Proxies
Device Interface Layer
XFS Layer
ODS Components
Service Provider interfaces
Device Services
Device Drivers
722
Configuration Manager
ATM Hardware
Receipt Printer
Statement Printer
Cash Dispenser
724
726

FIG. 56

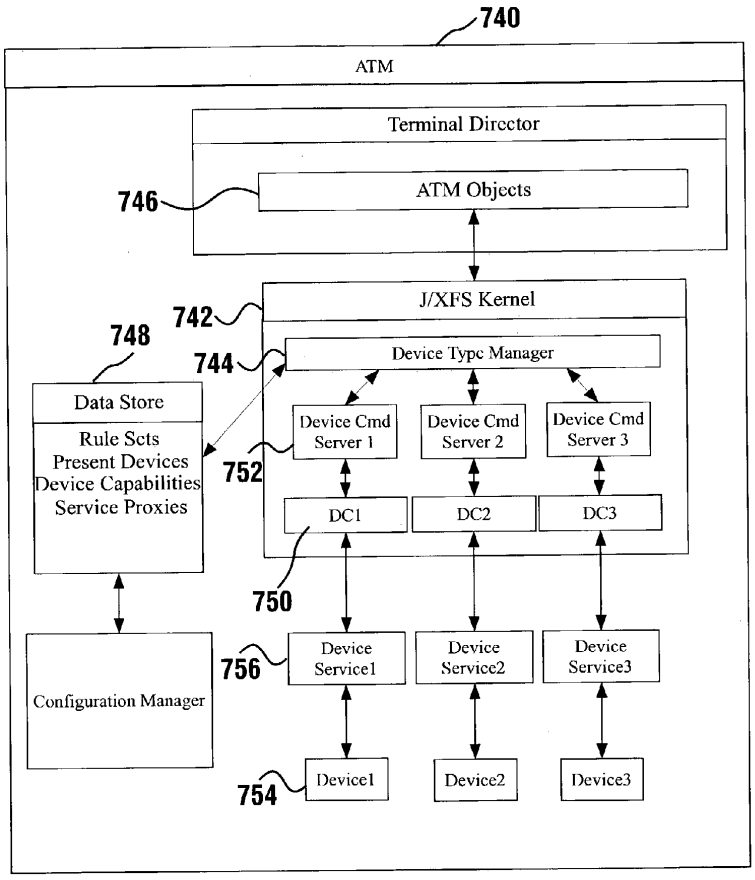
740
ATM
Terminal Director
ATM Objects
746
J/XFS Kernel
742
748
744
Device Type Manager
Data Store
Rule Sets
Present Devices
Device Capabilities
Service Proxies
Device Cmd Server 1
Device Cmd Server 2
Device Cmd Server 3
752
DC1
DC2
DC3
750
Configuration Manager
756
Device Service1
Device Service2
Device Service3
754
Device1
Device2
Device3

FIG. 57

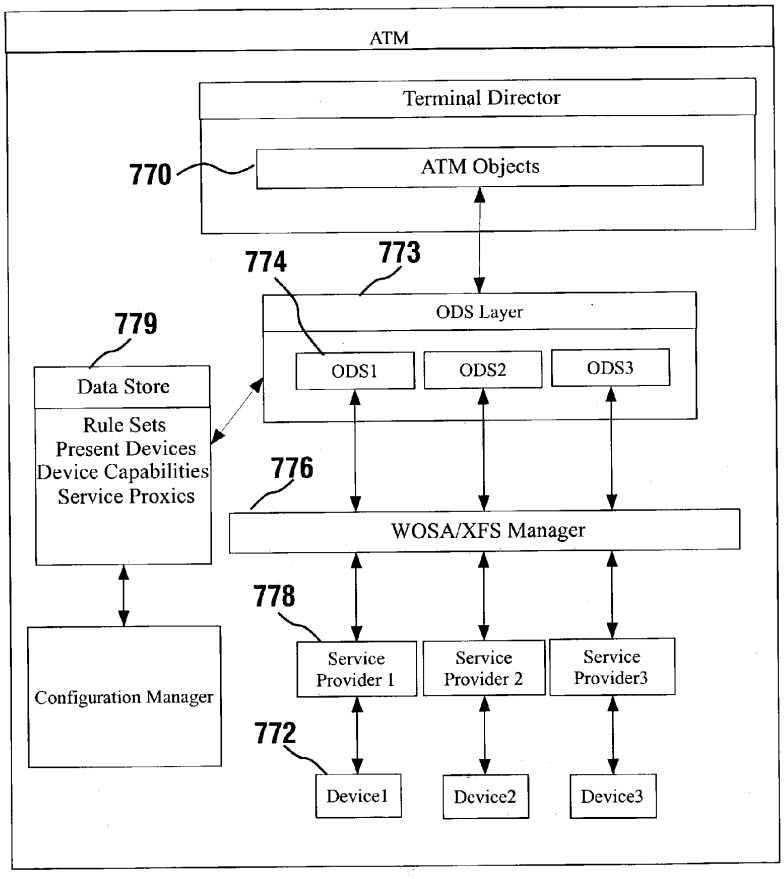
ATM
Terminal Director
770
ATM Objects
774
773
ODS Layer
779
ODS1
ODS2
ODS3
Data Store
Rule Sets
Present Devices
Device Capabilities
Service Proxies
776
WOSA/XFS Manager
778
Service Provider 1
Service Provider 2
Service Provider3
Configuration Manager
772
Device1
Device2
Device3

FIG. 58

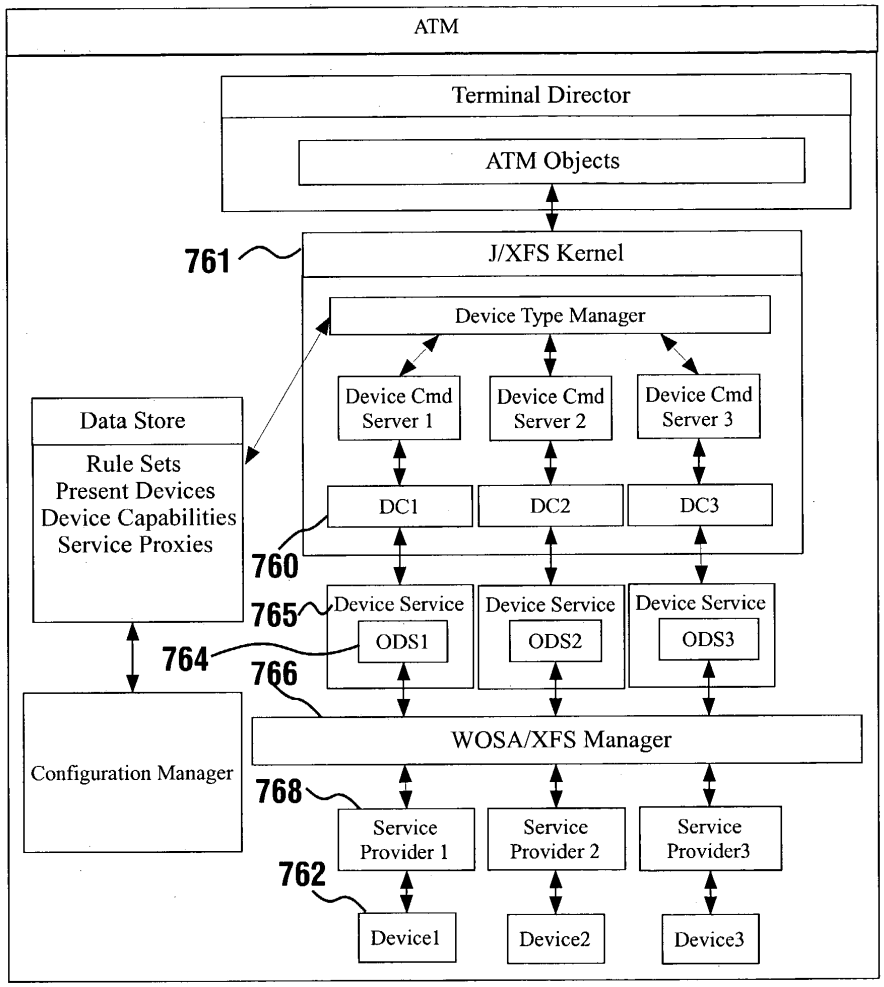
ATM
Terminal Director
ATM Objects
761
J/XFS Kernel
Device Type Manager
Device Cmd Server 1
Device Cmd Server 2
Device Cmd Server 3
Data Store
Rule Sets
Present Devices
Device Capabilities
Service Proxies
DC1
DC2
DC3
760
765
Device Service
Device Service
Device Service
ODS1
ODS2
ODS3
764
766
Configuration Manager
WOSA/XFS Manager
768
Service Provider 1
Service Provider 2
Service Provider3
762
Device1
Device2
Device3

FIG. 59

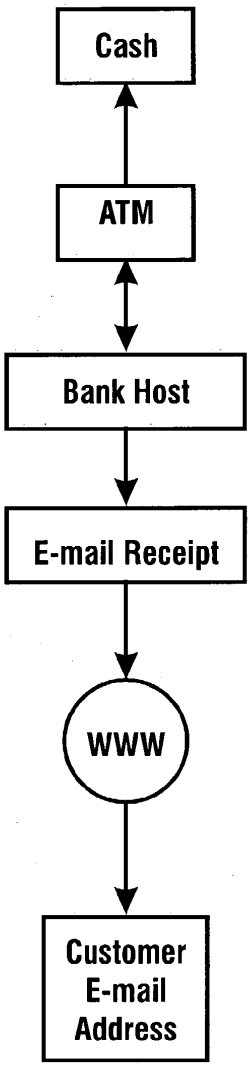
Cash
ATM
Bank Host
E-mail Receipt
WWW
Customer E-mail Address

Fig. 60

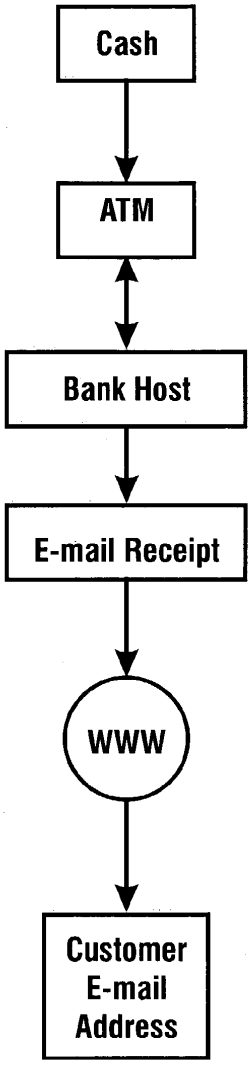
Cash
ATM
Bank Host
E-mail Receipt
WWW
Customer E-mail Address

Fig. 61

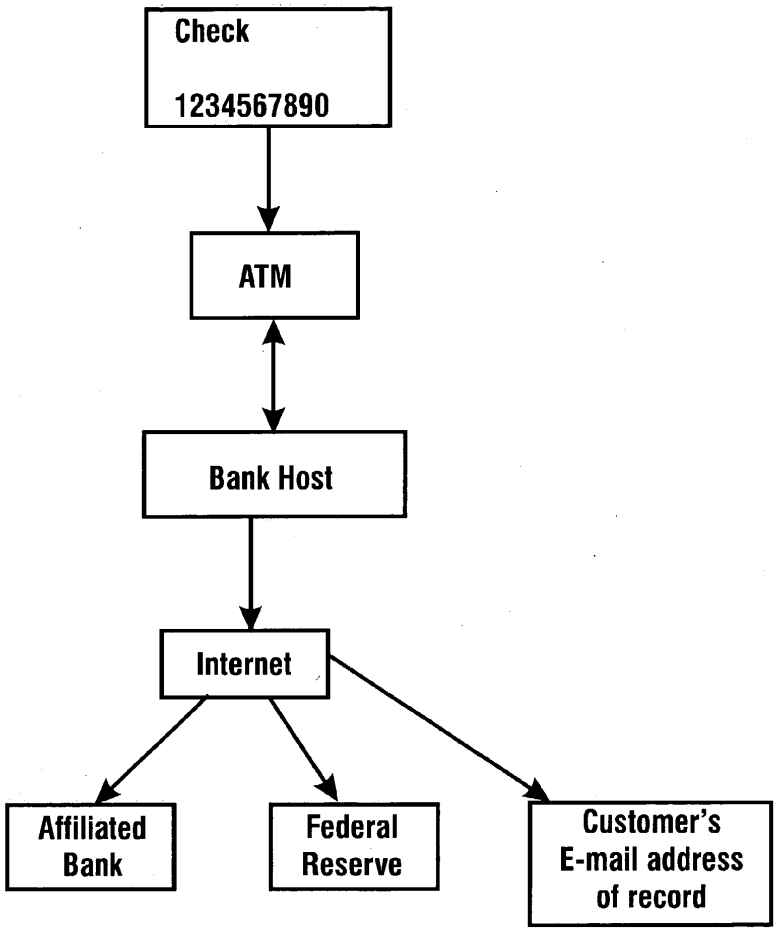
Check
1234567890
ATM
Bank Host
Internet
Affiliated Bank
Federal Reserve
Customer's E-mail address of record

Fig. 62

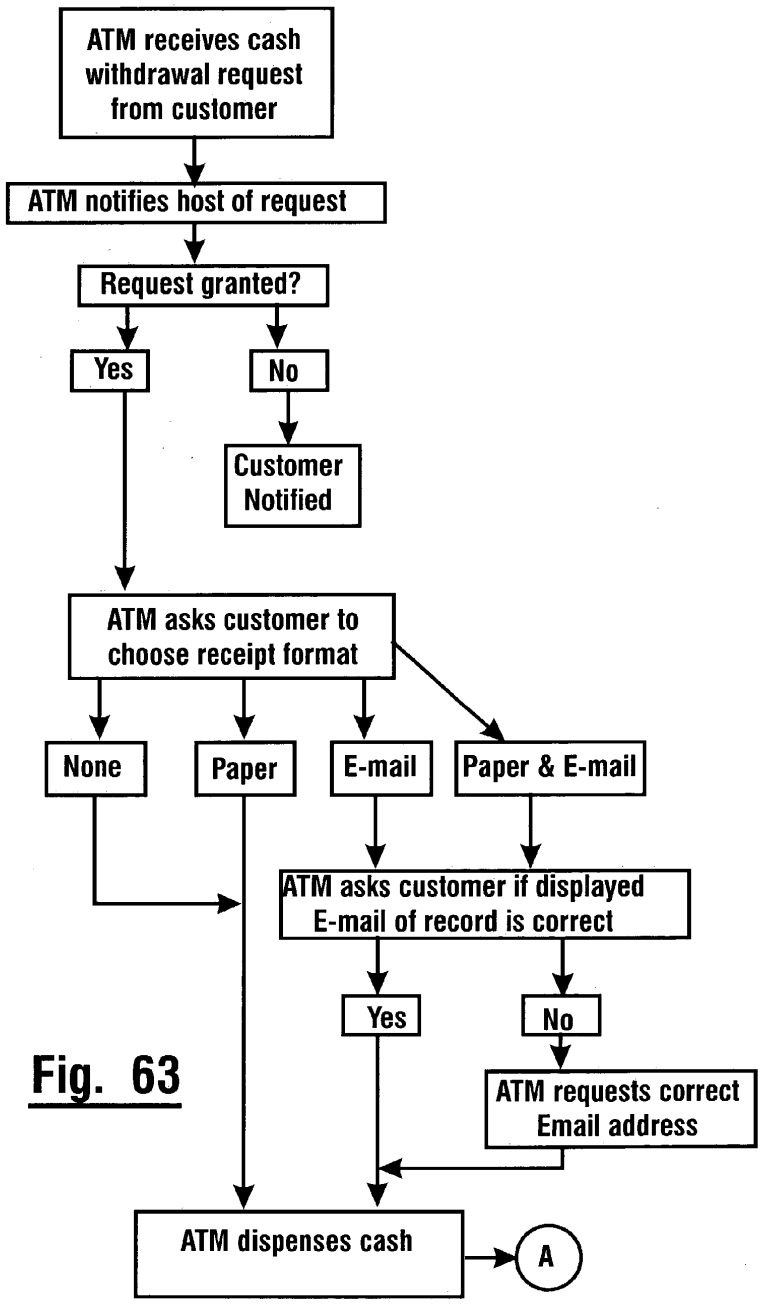
ATM receives cash withdrawal request from customer
ATM notifies host of request
Request granted?
Yes
No
Customer Notified
ATM asks customer to choose receipt format
None
Paper
E-mail
Paper & E-mail
ATM asks customer if displayed E-mail of record is correct
Yes
No
ATM requests correct Email address
ATM dispenses cash
A

Fig. 63

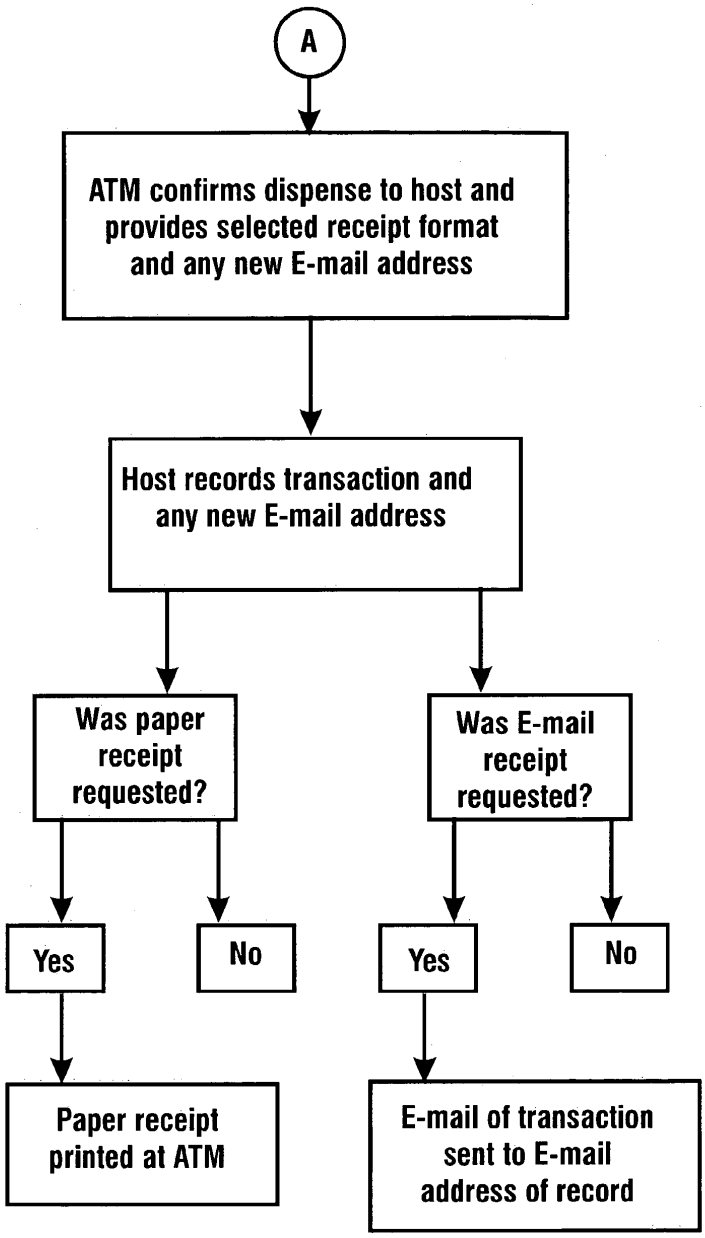
A
ATM confirms dispense to host and provides selected receipt format and any new E-mail address
Host records transaction and any new E-mail address
Was paper receipt requested?
Was E-mail receipt requested?
Yes
No
Yes
No
Paper receipt printed at ATM
E-mail of transaction sent to E-mail address of record

Fig. 64

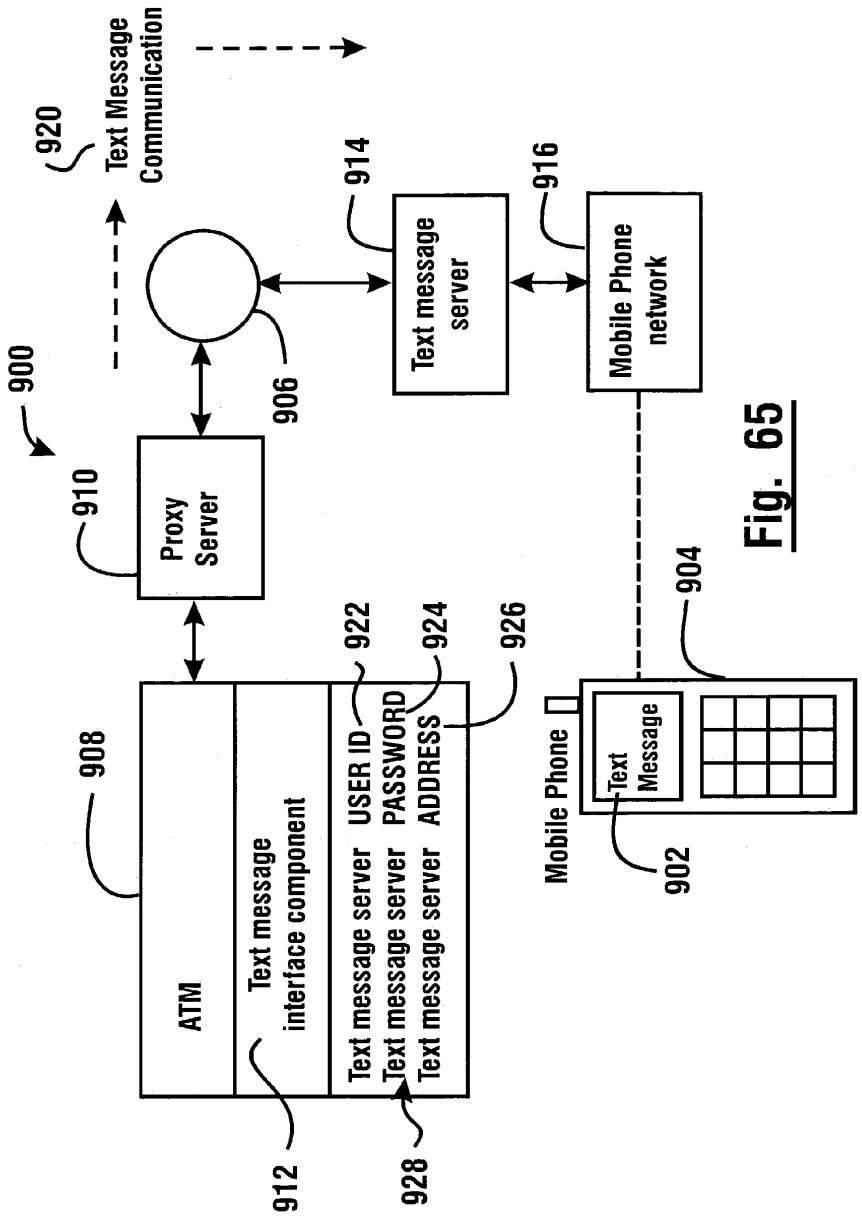
900
920
Text Message Communication
910
Proxy Server
906
914
Text message server
916
Mobile Phone network
908
ATM
Text message interface component
912
Text message server USER ID
Text message server PASSWORD
Text message server ADDRESS
922
924
926
928
Mobile Phone
Text Message
902
904

Fig. 65

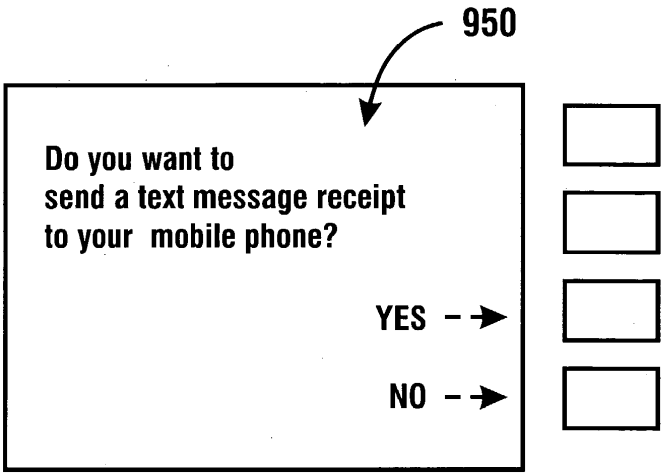
950
Do you want to
send a text message receipt
to your mobile phone?
YES
NO

Fig. 66

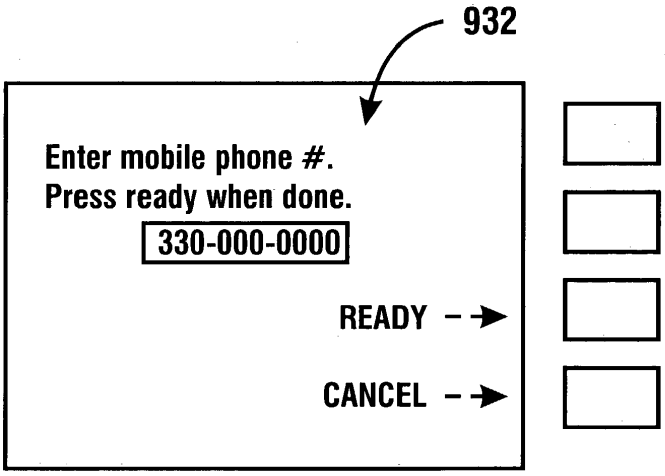
932
Enter mobile phone #.
Press ready when done.
330-000-0000
READY
CANCEL

Fig. 67

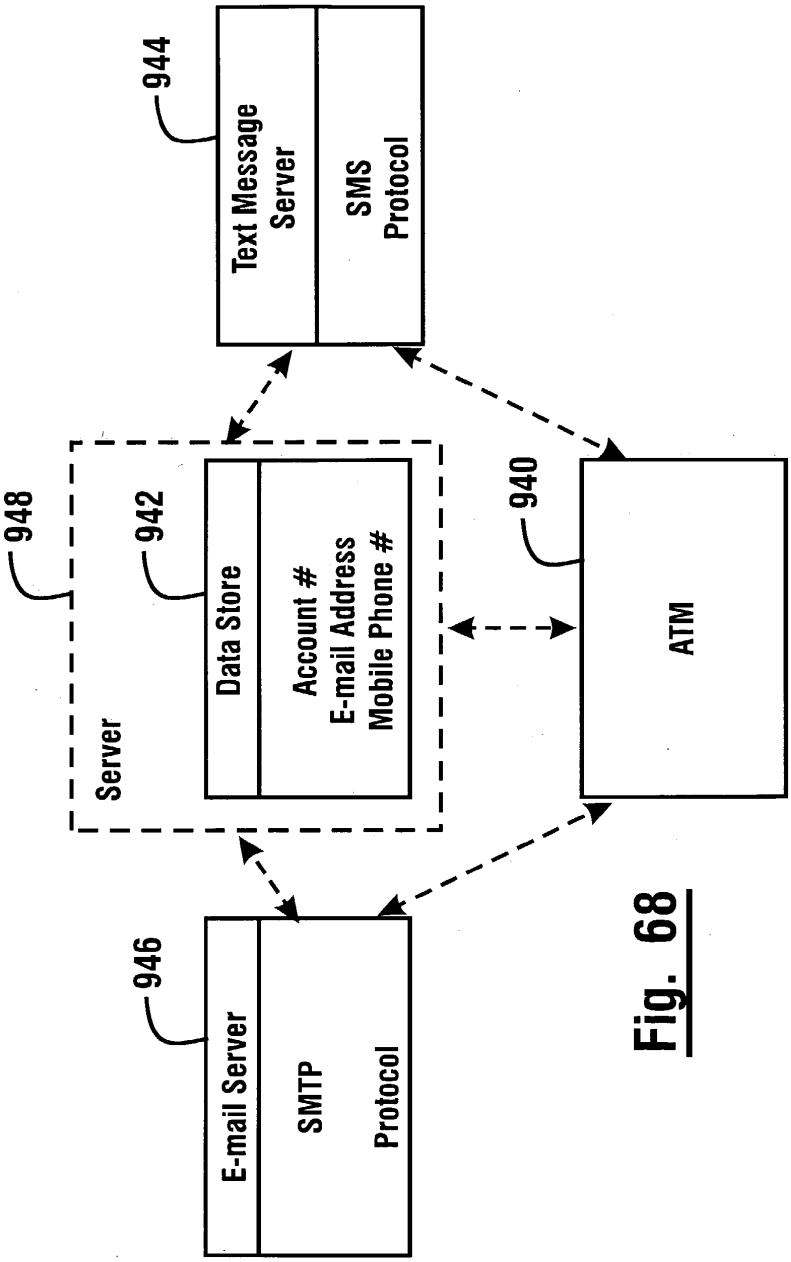
944
Text Message Server
SMS Protocol
948
Server
942
Data Store
Account #
E-mail Address
Mobile Phone #
940
ATM
946
E-mail Server
SMTP Protocol

Fig. 68

AUTOMATED BANKING MACHINE SYSTEM AND METHOD

CROSS REFERENCE TO RELATED APPLICATIONS

[0001] This application claims priority pursuant to 35 U.S.C. §119(e) of Provisional Applications No. 60/378,705 filed May 7, 2002 and No. 60/423,756 filed Nov. 5, 2002. This application is also a continuation in part of copending application Ser. No. 09/638,848 filed Aug. 14, 2000 which claims priority of Provisional Application No. 60/149,765 filed Aug. 19, 1999. this application is also a continuation in part of copending application Ser. No. 09/578,291 filed May 25, 2000 which claims priority of provisional No. 60/144, 761 filed Jul. 20, 1999. This application is also a continuation-in-part of copending application Ser. No. 09/193,787 filed Nov. 17, 1998 which claims benefit of Provisional Applications No. 60/091,887 filed Jul. 7, 1998, No. 60/095, 626 filed Aug. 7, 1998 and No. 60/098,907 filed Sep. 2, 1998; and which is a continuation-in-part of PCT/US97/21422 filed Nov. 25, 1997 (U.S. Ser. No. 09/077,337) which claims priority of Provisional Application No. 60/031,956 filed Nov. 27, 1996.

TECHNICAL FIELD

[0002] This invention relates to automated banking machines. Specifically this invention relates to an automated banking machine apparatus and system that are capable of use in a wide area network, and which provides a user with a remote electronic receipt or other record related to a transaction performed at the machine.

BACKGROUND ART

[0003] Automated banking machines are well known. A common type of automated banking machine used by consumers is an automated teller machine ("ATM"). ATMs enable customers to carry out banking transactions. Common banking transactions that may be carried out with ATMs include the dispensing of cash, the receipt of deposits, the transfer of funds between accounts, the payment of bills and account balance inquiries. The type of banking transactions a customer can carry out are determined by capabilities of the particular banking machine and the programming of the institution operating the machine. Other types of automated banking machines may limit customers to particular transactions, such as a bank depository not permitting the dispensing of cash. Other types of automated banking machines may allow customers to charge against accounts or to transfer funds. Other types of automated banking machines may comprise self-service machines at self-service facilities. For example, a self-service machine may be located at a checkout area of a store, such as a grocery store. Other self-service machines may comprise vending machines. Other types of automated banking machines may print or dispense items of value such as coupons, tickets, wagering slips, vouchers, checks, food stamps, postage stamps, money orders, scrip, or travelers checks. Some types of automated banking machines, such an ATMs, typically permit customers to receive a printed sheet which is a receipt indicating the particulars of the transactions they have conducted at the machine. In addition customers may request and receive from some ATMs a more detailed statement of transactions conducted on their account or a related account. For purposes of this disclosure an automated banking machine or automated transaction machine shall encompass any device which carries out transactions including transfers of value.

[0004] Currently most ATMs are operated in proprietary communications networks. These networks interconnect ATMs operated by financial institutions and other entities. The interconnection of the networks often enables a user to use a banking machine operated by another institution if the foreign institution's banking machine is interconnected with the network that includes the user's institution. However when the customer operates the foreign institution's machine the customer must operate the machine using the customer interface that has been established by the foreign institution for its banking machines. In addition the user is limited to the transaction options provided by the foreign institution.

[0005] A customer may encounter difficulties when using a foreign institution's machine. Problems may occur because the user is not familiar with the type of machine operated by the foreign institution. Confusion may result because the customer does not know which buttons or other mechanisms to actuate to accomplish the desired transactions. The transaction flow for a customer at a foreign institution machine may be significantly different from machines operated by the user's home institution. This may be particularly a problem when the user is from another country and is not familiar with the type of banking machine or the language of the interface provided by the foreign institution. Likewise, the documents which are printed by printers in an automated banking machine are generally limited to a limited group of defined formats in a single language.

[0006] A foreign institution may also provide different types of transactions than the user is familiar with at their home institution. For example the user's home institution may enable the transfer of funds between accounts through their automated banking machines, to enable the user to maintain funds in higher interest bearing accounts until they are needed. If the foreign institution does not provide this capability, the user will be unable to do this when operating the foreign machine. The inability of a user at a foreign machine to conduct the transactions that they are accustomed to may present problems.

[0007] The networks that operate automated teller machines and other types of automated banking machines generally operate proprietary networks to which access is restricted. This is necessary to prevent fraud or tampering with the network or user's accounts. Proprietary networks are also generally used for the transmission of credit card messages and other financial transaction messages. Access to such credit card processing systems is also restricted primarily for purposes of maintaining security.

[0008] Communication over wide area networks enables messages to be communicated between distant locations. The best known wide area network is the Internet which can be used to provide communication between computers throughout the world. The Internet has not been as widely used for financial transaction messages because it is not generally regarded as a secure system. Messages intended for receipt at a particular computer address may be intercepted at other addresses without detection. Because the

messages may be intercepted at locations that are distant in the world from the intended recipient, there is potential for fraud and corruption.

[0009] Companies sometimes provide approaches for more secure transmission of messages on the Internet. Encryption techniques are also being applied to Internet messages. However the openness of the Internet has limited its usefulness for purposes of financial messages, particularly financial messages associated with the operation of automated banking machines.

[0010] Messages in wide area networks may be communicated using the Transmission Control Protocol/Internet protocol ("TCP/IP"). U.S. Pat. No. 5,706,422, which is incorporated herein by reference, shows an example of a system in which financial information stored in databases is accessed through a private wide area network using TCP/IP messages. The messages transmitted in such networks which use TCP/IP may include "documents" (also called "pages"). Such documents are produced in Hypertext Markup Language ("HTML") which reference to mark up language herein being to a type of programming language used to produce documents with commands or "tags" therein. The tags are codes which define features and/or operations of the document such as fonts, layout, imbedded graphics and hypertext links. Mark up language documents such as HTML documents are processed or read through use of a computer program referred to as a "browser." The tags tell the browser how to process and control what is seen on a screen and/or is heard on speakers connected to the computer running the browser when the document is processed. HTML documents may be transmitted over a network through the Hypertext Transfer Protocol ("HTTP"). The term "Hypertext" is a reference to the ability to embed links into the text of a document that allow communication to other documents which can be accessed in the network.

[0011] Thus there exists a need for an automated banking machine and system that can be used in a wide area network such as the Internet while providing a high level of security. There further exists a need for an automated banking machine and system which provides a user with the familiar interface and transaction options of their home institution when operating foreign institution machines. There further exists a need for a machine which may provide more transaction options and types of promotional and printed materials to users.

DISCLOSURE OF INVENTION

[0012] It is an object of an exemplary form of the present invention to provide an automated banking machine at which a user may conduct transactions.

[0013] It is a further object of an exemplary form of the present invention to provide an automated banking machine that may be operated through connection to a wide area network.

[0014] It is a further object of an exemplary form of the present invention to provide an automated banking machine and system that provides a user with a familiar interface and transaction options of their home institution at machines operated by foreign institutions.

[0015] It is a further object of an exemplary form of the present invention to provide an automated banking machine that communicates using mark up language documents and TCP/IP messages.

[0016] It is a further object of an exemplary form of the present invention to provide an automated banking machine that enables the connection of the banking machine to a user's home institution through mark up language documents and TCP/IP messages generated responsive to indicia on a card input by a user.

[0017] It is a further object of an exemplary form of the present invention to provide an automated banking machine and system that accomplishes transactions over a wide area network while maintaining a high level of security.

[0018] It is a further object of an exemplary form of the present invention to provide an automated banking machine and system that controls connection of the banking machine to foreign addresses through a proxy server.

[0019] It is a further object of an exemplary form of the present invention to provide an automated banking machine that limits the operation of devices in the machine through a local device server.

[0020] It is a further object of an exemplary form of the present invention to provide an automated banking machine and system that is operable through connection to the Internet.

[0021] It is a further object of an exemplary form of the present invention to provide an automated banking machine that may be used to provide a user with more types of messages including messages targeted to particular users.

[0022] It is a further object of an exemplary form of the present invention to provide an automated banking machine which is capable of providing users with a wider variety of printed documents.

[0023] It is a further object of an exemplary form of the present invention to provide an automated banking machine which provides additional options for identifying authorized users.

[0024] It is a further object of an exemplary form of the present invention to provide an automated banking machine that can be used in connection with existing transaction systems while providing enhanced functionality.

[0025] It is a further object of an exemplary form of the present invention to provide an automated banking machine which provides enhanced diagnostic and service capabilities.

[0026] It is a further object of an exemplary form of the present invention to provide an automated banking machine which performs transactions at a rapid pace.

[0027] It is a further object of exemplary forms of the present invention to provide improved systems in which automated banking machines are used.

[0028] It is a further object of exemplary forms of the present invention to provide improved methods of operation for automated banking machines and systems.

[0029] It is a further object of exemplary forms of the present invention to provide an electronic transaction receipt or other electronic messages to a user of an automated banking machine.

[0030] Further objects of exemplary forms of the present invention will be made apparent in the following Best Modes for Carrying Out Invention and the appended claims.

Early Warning
IPR2024-01221
Ex. 1008-58

[0031] The foregoing objects are accomplished in an exemplary embodiment by an automated banking machine that includes output devices such as a display screen, and input devices such as a touch screen and/or a keyboard. The banking machine further includes devices such as a dispenser mechanism for sheets of currency, a printer mechanism, a card reader/writer, a depository mechanism and other transaction function devices that are used by the machine in carrying out banking transactions.

[0032] The banking machine is in operative connection with at least one computer. The computer includes at least one processor and is in operative connection with the output devices and the input devices, as well as with the sheet dispenser mechanism, card reader and other physical transaction function devices in the banking machine. The computer includes software programs that are executable therein. The software includes a document handling portion for handling HTML or other documents. The document handling portion operates to send and receive HTML documents and HTTP messages. The HTML document handling portion is preferably in operative connection with the output device to display screens including hypertext link indicators. The document handling portion is also preferably in operative connection with the input device which enables user selection and the generation of response messages from the computer. The document handling portion may operate in connection with a JAVA or Net software environment and may have the capability of executing instructions in JAVA, VB script or other scripting language transmitted with documents.

[0033] The software in the computer of the exemplary embodiment further preferably includes a device application portion. The device application portion includes software that is operative to control the sheet dispenser and other devices. In the exemplary form of the invention the device application portion includes a plurality of JAVA applets or Net objects for operating devices in the machine.

[0034] The computer in the exemplary automated banking machine further includes a device interfacing software portion. The device interfacing software portion operates to receive messages from the device application portion and to cause the devices to operate through appropriate hardware interfaces. In one exemplary form of the automated banking machine, the document handling portion, device application portion and device interfacing software portion each reside on the same computer and communicate at different IP ports.

[0035] The automated banking machine of one exemplary configuration communicates using TCP/IP messages in an intranet which includes a plurality of such machines. The intranet is in turn connected to at least one computer which is operated by a home institution. The home institution is the entity that operates the banking machines.

[0036] The computer of the home institution preferably includes a home HTTP server, a proxy server and a device server. The proxy server communicates through the intranet with the document handling portion of the software in each of the banking machines. The proxy server is also connectable to a wide area network, such as the Internet, to which foreign servers are connected. The device server is operative to pass messages between the device application portion and the device interfacing software portion of the banking machines. The device server may include monitor software which monitors and selectively limits the use and operation of the devices in the banking machine. This provides a level of security.

[0037] The automated banking machine and system of an exemplary embodiment is operative to place a user in connection with the institution where they have their accounts. This can be either the home institution that operates the banking machine where the user is present, or a foreign institution which is connected to the wide area network. To operate the banking machine a user provides inputs which correspond to an address, such as a URL address, through an address input device. The document handling portion operates to cause the banking machine to be connected to the server corresponding to that address. This may be accomplished in an exemplary embodiment by the user having indicia representative of the address on a card that is read by a card reader in the banking machine, or other input device which identifies the user or an institution or entity with which the user has accounts.

[0038] The document handling portion is responsive to the address on the card or other input data to connect through the proxy server to the user's institution. If the user's home institution address corresponds to the home server, the banking machine operates responsive to messages from the home server. If however the user's input address corresponds to an address of a foreign server, the proxy server is operative to communicate through the wide area network with the foreign server at the customer's home institution. If the customer causes the machine to connect a server operated by a foreign institution, the documents sent from the foreign institution correspond to those normally provided by the foreign institution. As a result the customer is familiar with the interface produced by these documents and will be able to more readily operate the banking machine.

[0039] The foreign server or home server operates the banking machine by sending documents that include instructions which enable operation of the devices in the banking machine. The instructions are transmitted from the document handling portion to the device application portion of the software, which operates the devices in response to the instructions. The instructions from the device application portion to the devices in the automated banking machine are passed through the device server of the home institution. This helps to maintain security. In addition, the proxy server may include screening software which limits the foreign servers which may connect to and operate the banking machine. This is referred to as, a "fire wall."

[0040] The automated banking machine and system of an exemplary embodiment is also operative to provide electronic evidence relating to the transaction to a customer of the machine.

[0041] Embodiments of the present invention also provide enhanced user interfaces and for the printing of a wide variety of documents with the banking machine. The invention also enables achieving enhanced functionality while utilizing existing transaction networks and automated transaction machines.

BRIEF DESCRIPTION OF DRAWINGS

[0042] **FIG. 1** is a schematic view of a network configuration including an exemplary embodiment of the automated banking machine apparatus and system.

Early Warning
IPR2024-01221
Ex. 1008-59

[0043] **FIG. 2** is a schematic view of the exemplary embodiment of an automated banking machine.

[0044] **FIGS. 3 through 24** show schematic views of the automated banking machine, an intranet connecting the banking machine to a computer system of a home bank and a wide area network connecting the computer system of the home bank to a foreign bank.

[0045] **FIGS. 3 through 18** schematically represent steps in a transaction carried out at the banking machine with the computer system of the home bank.

[0046] **FIGS. 19 through 24** schematically represent steps in a transaction carried out at the banking machine with the computer system of the foreign bank.

[0047] **FIG. 25** is a schematic view of a network configuration including an alternative embodiment of the automated banking machine.

[0048] **FIG. 26** is a schematic view of frames in the HTML document handling portion of the alternative embodiment of the automated banking machine shown in **FIG. 25**.

[0049] **FIG. 27** is a schematic view of a customer interface of an automated banking machine and the function keys and keypad keys included in the interface.

[0050] FIGS. **28-30** schematically represent exemplary steps in converting function key and keypad key inputs to keyboard stream and mouse stream inputs.

[0051] **FIG. 31** schematically represents exemplary steps in printing documents with the automated banking machine.

[0052] **FIG. 32** is a screen output representing combined outputs from five browsers operated in an automated banking machine.

[0053] **FIG. 33** is a screen output representing outputs from three browsers operating in an automated banking machine.

[0054] **FIG. 34** is a screen output representing outputs from nine browsers operating in an automated banking machine.

[0055] **FIG. 35** is a screen output representing outputs from two browsers operating in an automated banking machine.

[0056] **FIG. 36** is a screen output representing a visual programming environment for creating terminal directors.

[0057] **FIG. 37** is a portion of the visual workspace representing event to method connections and parameter connections between ATM objects.

[0058] **FIG. 38** is a screen output representing a window for creating, viewing or modifying an event to method connection.

[0059] **FIG. 39** is a chart representative of ATM objects and associated visual icons.

[0060] FIGS. **40-53** schematically represent exemplary ATM objects with associated methods, events and properties.

[0061] **FIG. 54** schematically represents the interaction between a consumer, a terminal director, a database, a host, and a plurality of ATM devices.

[0062] **FIG. 55** is a schematic view representative of the interaction between the customer profile object and a plurality of data stores.

[0063] **FIG. 56** is a schematic view representative of an exemplary ATM that enables ATM objects to determine the capabilities of devices and to specify rules for using fallback devices when an original device becomes inoperative.

[0064] **FIG. 57** is a schematic view representative of an alternative embodiment of an ATM that includes a modified J/XFS kernel for enabling ATM objects to determine the capabilities of devices and to specify rules for using fallback devices.

[0065] **FIG. 58** is a schematic view representative of an alternative embodiment of an ATM that includes an enhanced ODS Layer for enabling ATM objects to determine the capabilities of devices and to specify rules for using fallback devices.

[0066] **FIG. 59** is a schematic view representative of an alternative embodiment of an ATM that includes an ODS layer for providing an interface between a modified J/XFS kernel and a WOSA/XFS Manager.

[0067] **FIG. 60** is a schematic view representative of a cash withdrawal at an automated banking machine and providing a remote electronic transaction receipt.

[0068] **FIG. 61** is a schematic view representative of a cash deposit at an automated banking machine providing a remote electronic transaction receipt.

[0069] **FIG. 62** is a schematic view representative of a check deposit at an automated banking machine and with plural messages reflecting the transaction.

[0070] FIGS. **63-64** schematically represent exemplary steps in a cash withdrawal with an automated banking machine having remote electronic transaction receipt capability.

[0071] FIGS. **65-68** schematically represent the process of sending a text message from an ATM.

BEST MODES FOR CARRYING OUT INVENTION

[0072] Referring now to the drawings and particularly to **FIG. 1**, there is shown therein a network configuration schematically indicated **10**, which includes an exemplary automated banking machine apparatus and system. Network **10** includes a plurality of automated banking machines **12** which in the exemplary system are ATMs. ATMs **12** are connected to a computer system of a home bank schematically indicated **14**. Home bank computer system **14** is the computer system that is operated by the bank or other institution which has primary responsibility for the ATMs **12**. Home bank computer system **14** is connected to the ATMs **12** through an intranet **16**. Intranet **16** is preferably a local or proprietary network that provides communication between the computer system **14** and the banking machines **12** using messages in the transmission control protocol/internet protocol ("TCP/IP") format.

Early Warning
IPR2024-01221
Ex. 1008-60

[0073] The messages that are communicated through the intranet **16** in the exemplary embodiment are preferably TCP/IP messages and hypertext mark up language ("HTML") documents. In one exemplary embodiment of the invention the HTML documents sent through intranet **16** include embedded object oriented programming instructions, in the JAVA® format which has been developed by Sun Microsystems or an application designed to operate according to Microsoft's Net platform. The messages sent through intranet **16** may be sent in an encrypted or unencrypted form depending on the nature of the system and the security needs of the home bank.

[0074] It should be understood that embodiments of the invention may process other forms of documents which include tags or instructions therein. For example a form of "extended" HTML ("XML") has been developed which may be used in embodiments of the invention. For purposes of the invention all such forms of languages and variants which include documents, which documents include instructions therein shall be referred to as mark up language documents. Likewise, while JAVA® is used in the described embodiment, other programming languages may be used. For example, Net or Active-XTM developed by Microsoft Corporation or other languages may be used in other embodiments. Further it should be understood that the instructions included in documents may be operative to cause a computer to access other documents, records or files at other addresses to obtain a program to carry out an operation.

[0075] Home bank computer system **14** is also connectable as shown to a wide area network **18**. In some embodiments of the invention the wide area network **18** is the Internet. In other embodiments of the invention, other wide area networks may be used. The wide area network preferably communicates messages in TCP/IP between numerous computer systems connected to the wide area network. These foreign computer systems are schematically represented by servers **20**, **22**, **24**, **26** and **28**. It should be understood that servers **20** through **28** may be operated by or connected to other financial institutions throughout the world. Servers **20** through **28** preferably operate by communicating mark up language documents and other HTTP messages.

[0076] **FIG. 2** shows a schematic view of the ATM **12** used in connection with one exemplary embodiment. ATM **12** includes a touch screen **30**. Touch screen **30** includes a display screen which serves as an output device for communication with a user of the machine. Touch screen **30**, because it is a touch screen, also serves as an input device for receiving input instructions from a user. Touch screen **30** is connected through an interface **32** to at least one computer **34** which is preferably housed within the machine. Alternative embodiments may include other types and/or additional output devices such as audio speakers.

[0077] Computer **34** is also in connection with a plurality of transaction function devices **36** which are included in ATM **12**. Devices **36** include for example, a reader such as a card reader/writer mechanism **38** and a keyboard **40**. Devices **36** further include a sheet dispenser mechanism **42** which is operative to dispense sheets, which in some embodiments are currency or bank notes. Devices **36** also include a depository **44** for accepting deposits into a secure location in the machine. Deposits in some embodiments may include sheets such as notes and checks, and/or items of value housed in containers such as deposit envelopes. A receipt printer **46** for providing transaction receipts to customers is also included among devices **36**. A journal printer **48** is also included among the devices for keeping a hard copy record of transaction information. In other embodiments other or additional transaction function devices which carry out other transaction functions may be used. Other embodiments may include fewer transaction function devices. It should be further understood that while the described embodiment is an automated banking machine, the principles may be employed in many types of transaction machines that do not necessarily carry out banking transactions.

[0078] Each of the devices is operatively connected to an internal control bus **50** within the banking machine **12**. The control bus **50** outputs the internal messages to the particular devices. Each device has an appropriate hardware interface which enables the particular device to operate to carry out its respective function in response to the messages transmitted to it on control bus **50**. Card reader/writer **38** has a hardware interface schematically shown as **52**. Hardware interfaces **54**, **56**, **58**, **60** and **62** are respectively operative to connect keyboard **40**, sheet dispenser mechanism **42**, depository mechanism **44**, receipt printer mechanism **46** and journal printer mechanism **48** to the control bus **50**.

[0079] Computer **34** has several software programs that are executable therein. In the exemplary embodiment these software programs include a device interfacing software portion generally indicated **64**. Device interfacing software portion **64** preferably includes a software device interface **66** that causes the computer to communicate electronic messages through the control bus **50**. The device interface software portion **64** also preferably includes a device manager **68**. The device manager is preferably operative to manage the various devices **36** and to control their various states so as to be assured that they properly operate in sequence. The device manager is also preferably operative to communicate with software device objects so as to enable operation of the devices responsive to at least one object-oriented program **70**. Device interfacing software portion **64** also includes the object oriented program portion **70**, which in one exemplary embodiment is an application written in the JAVA language. Program **70** works in conjunction with the device manager to receive messages which cause the devices to operate, and to transmit device operation messages indicative of a manner in which devices are operating and/or are receiving input data.

[0080] The device interfacing software portion **64** in the described embodiment operates on computer **34** and communicates through a physical TCP/IP connection **72** with the intranet **16**. The physical connection may be analog dial-up, serial port, ISDN connection or other suitable connection. In the configuration of the system as shown, device interfacing software portion **64** communicates at the IP address of computer **34** and at an IP port or socket indicated **74** that is different from the other software applications. In other embodiments device interfacing software portion **64** may operate in a different computer than the other software applications.

[0081] It should further be understood that although in the exemplary embodiment the device interfacing portion **64** is

Early Warning
IPR2024-01221
Ex. 1008-61

software, in other embodiments of the invention all or portions of the instruction steps executed by software portion **64** may be resident in firmware or in other program media in connection with one or more computers, which are operative to communicate with devices **36**. For purposes of the invention all such forms of executable instructions shall be referred to as software.

[**0082**] Other software also operates in computer **34**. Computer **34** includes at least one processor in operative connection with at least one data store. This software includes document handling software which includes a browser, schematically indicated **76**. In one exemplary embodiment the document handling software includes a Netscape Navigator® browser provided by Netscape Communications. However in other embodiments other document handling and communicating software and browser software, such as Hot JAVA® by Sun Microsystems or Internet Explorer™ from Microsoft, may be used. Browsers used in embodiments may be operative to process documents and cause a computer to produce outputs that can be used to produce visible outputs on a screen, as well as other types of signals or messages. In the exemplary embodiment browser **76** communicates in computer **34** at an IP port indicated by **78**.

[**0083**] Browser **76** is in operative connection with JAVA environment software **80** which enables computer **34** to run JAVA language programs. JAVA language programs have the advantage that they may operate the same on a variety of hardware platforms without modification. This "write once\run anywhere" capability makes the JAVA environment well-suited for the described embodiment of the invention. However, other embodiments may use different types of software programs.

[**0084**] The JAVA environment software **80** enables computer **34** to execute instructions in JAVA script, schematically indicated **82**. The instructions that are executed by the computer in JAVA script are preferably embedded JAVA script commands that are included in HTML documents which are received through the browser **76**. In this exemplary embodiment the browser **76** in connection with the JAVA environment software **80** which executes instructions in the embedded JAVA script **82**, serve as an HTML document handling software portion for transmitting and receiving HTML documents and TCP/IP messages through the IP port indicated by **78**. In other embodiments other browsers and/or software may be used for handling HTML documents.

[**0085**] Computer **34** also has software executable therein having a device application portion **84**. The device application portion **84** contains executable instructions related to operation of the devices **36**. In the exemplary embodiment, the device application portion includes a plurality of JAVA applets. In the described embodiment the applets are also preferably programs operable to control and keep track of the status of the devices with which they are associated. Certain applets are also preferably operable to configure the browser to communicate messages. Certain applets manage security and authenticate entities that use the ATM.

[**0086**] In the described embodiment, JAVA applets are associated with functions such as enabling the card reader mechanism, notifying the browser when a user's card data has been entered, operating the receipt printer mechanism, operating the journal printer mechanism, enabling the customer keyboard and receiving data input through the keyboard, operating the sheet dispenser mechanism, operating the depository, navigating to document addresses, timing device functions, verifying digital signatures, handling encryption of messages, controlling the mix of bills dispensed from multiple sheet dispenser mechanisms, calculating foreign exchange, and ending a transaction and instructing the browser to return to communication with the home server. Of course in other embodiments, other applets may be used to control devices and use data to carry out various desired functions with the machine. The device application portion **84** communicates in the computer **34** at an IP port indicated **86**.

[**0087**] In the described embodiment, the device application portion **84** of the software does not communicate its messages directly to the device interfacing software portion **64**. As later explained, this is one approach to providing heightened security. However it should be understood that embodiments may provide for the device application portion **84** to directly communicate device operation messages to the device program **70**. This may be done either internally using TCP/IP, by delivery of messages in a conventional manner through a queue established in the operating system of the computer that is associated with the software that interfaces with the devices, or by direct call to this software.

[**0088**] From the foregoing discussion it will also be appreciated that certain applets in the device application **84** may correspond to devices which are not present in all automated teller machines. For example an automated teller machine that operates only as a cash dispenser does not include a depository mechanism like depository **44**. To accommodate the situation where a user requests a transaction that is not physically possible with the ATM **12**, the device interfacing software portion **64** may be programmed to provide an appropriate response message to indicate that the function is not available.

[**0089**] Alternatively, the device interfacing software portion may include a function which checks for the presence or absence of each type of physical device within the ATM. Information indicative of the devices present in the ATM may be included as part of the messages generated by the ATM. For example, information indicative of the devices which are operative in the ATM may be included as a portion or several parts of the URL addresses to which messages are directed by the ATM. In this way, the URL in the server to which the ATM connects may be configured for providing only documents which correspond to the types of transactions that the ATM is capable of performing. As a result the browser avoids displaying documents which include references to transaction types that the machine is not capable of performing. Thus for example, a machine may avoid producing a display in response to a document which includes a reference to a deposit transaction if the machine does not include a depository.

[**0090**] Alternatively the machine may include in memory, data representative of the functional devices included in the machine. This may include for example data representative of a plurality of devices in the machine and the configurations of such devices, or alternatively, a designator such as a machine number sufficient to identify the capabilities of the machine. The device data indicative of the functional devices in the machine is communicated to a server and the

Early Warning
IPR2024-01221
Ex. 1008-62

server is operative to deliver the appropriate documents for the devices present in the machine. This may be done based on the data corresponding to the device data from the machine or may be resolved from a memory which holds data representative of the functional devices in a machine associated with a particular designator. Documents selectively delivered by the server to the browser of the machine will include the appropriate references to the functional devices present in the machine. In alternative embodiments messages from the machine may indicate the type of transaction being requested or other information which corresponds to devices or transaction capabilities available at the particular machine where a transaction is requested by a customer. Documents accessed may be static documents or may be generated at run time from sub-documents or other data, to provide the appropriate outputs and instructions to the output devices of the transaction machine.

[**0091**] **FIG. 3** shows the ATM **12** in communication through the intranet **16** with the home bank computer system **14**. Computer system **14** includes a proxy server **88**. System **14** further includes a home HTTP server **90**. Computer system **14** further includes a device server **92**. The proxy server, home HTTP server and device server may be included in a single computer as shown, or in other embodiments may be separate computers. Additional servers may be operative in other embodiments.

[**0092**] The home HTTP server **90** is preferably in communication with a data store and is in electronic communication with a back office computer system, schematically indicated **94**. Back office computer system **94** is operative to keep track of debiting or crediting customers' accounts when they conduct transactions at the automated banking machines. In addition back office **94** is also preferably operative to track transactions for purposes of accomplishing settlements with other institutions who are participants in the system and whose customers conduct transactions at the ATMs **12**.

[**0093**] As later explained, proxy server **88** is also operative in the described embodiment to communicate through the wide area network **18** with foreign servers such as foreign server **96**. Foreign server **96** is an example of a server operated by an institution or entity other than the institution which operates computer system **14**. It should be understood that while foreign server **96** is indicated as operated by a "foreign" institution, this is not necessarily indicative that the institution is located in another country from the institution that operates computer system **14**. However, it is possible that foreign server **96** could be located in such a foreign country, including a country in which the language spoken is different from that generally used in the country where ATM **12** is located.

[**0094**] The conduct of transactions using the ATM **12** is now explained with reference to FIGS. **3-24**. It should be understood that the following described transaction flows are merely examples of the operation of the apparatus and system, and the apparatus and system may be configured and operated in numerous ways to carry out transactions.

[**0095**] At the start of an exemplary transaction, as schematically represented in **FIG. 3**, the browser **76** communicates through the intranet **16** with the proxy server **88**. The communication is established preferably in a manner so that HTML documents intended to attract customers to the ATM **12** are processed and produce outputs displayed on the touch screen **30**. This is referred to as the "attract mode." These HTML documents which are processed in the browser to produce the outputs in the form of screens on the touch screen **30** (and/or outputs through other output devices included in the machine) may originate from home HTTP server **90** which is operative to deliver the HTML documents to the proxy server. The home HTTP server sends the messages addressed to the IP port associated with browser **76**, so as to cause their display at the proper ATM machine. It should be understood that while in this example, home server **90** is described as communicating with the ATMs through the proxy server **88**, the server **90** may in other systems encompassed by the invention communicate directly with the ATMs.

[**0096**] An advantage of the system is that home HTTP server **90** may deliver documents selectively to the ATMs **12** connected to the intranet **16**. These documents may include messages or material tailored to the particular location in which an ATM **12** is located. Examples of particularly tailored screens may include bilingual messages in certain neighborhoods or information concerning currency exchange at various ports of entry. The material or messages could include advertising for various products or services or other material targeted to particular machine locations. The JAVA applets and JAVA script are loaded from a central location providing selective software distribution in the ATMs which may also be used to tailor the ATM to its environment by causing it to access documents which include material intended to be useful in that location, and which is not provided in documents delivered to at least some other machines in the system.

[**0097**] Systems of the present invention may be configured to have selected machines access HTML documents at different addresses, so that the particular documents accessed include the material targeted to users of the particular machine. Alternatively, a machine may communicate machine data indicative of its identity and/or location to a server. From the machine data, and data stored in a data store in connection with the server, the server may operate to deliver the documents including the targeted material. This may be accomplished by assembling subdocuments, or otherwise, to generate the documents that will be delivered to the browser of the particular machine. In addition it should be understood that while in the embodiment shown the HTML documents are accessed through a server of an institution associated with the machine, the documents used for the attract mode may be accessed from other servers operated by other entities.

[**0098**] The touch screen **30** in this exemplary transaction sequence displays a screen which includes an icon which indicates in one or more languages that to commence a transaction a user should touch the screen. If a user touches the screen in the area of the icon an input signal is generated. The input signal or HTTP message is transmitted through the browser **76** to the home address of the home HTTP server **90** to which the ATM **12** is currently in communication. The message generated back to the home HTTP server is represented by the arrows directed from the browser **76** to the intranet **16**, from the intranet **16** to the proxy server **88**, and from the proxy server to the HTTP server **90** in **FIG. 3**.

[**0099**] In response to the home HTTP server **90** receiving the message indicating that a customer has touched the icon

Early Warning
IPR2024-01221
Ex. 1008-63

on the screen, the home server is operative responsive to the address accessed to send a message through the proxy server **88** (or in other embodiments directly) to the browser **76**. This message preferably includes an HTML document which when processed through the browser produces a screen instructing the customer to insert their card into the card reader mechanism **38**. The HTML document flow which is represented graphically in **FIG. 4**, preferably also includes embedded JAVA script or other instructions which operate in the JAVA environment to communicate a message to the JAVA applet responsible for enabling the card reader in the device application portion **84**. In one exemplary embodiment the instructions provide a pointer or tag to the applet which executes responsive to receipt of the document instructions. Of course in other embodiments other software and approaches may be used.

[0100] As schematically represented in **FIG. 5**, in response to the embedded JAVA script activating the JAVA applet associated with the enable card reader function, the JAVA applet in the device application portion **84** communicates with the device server **92**. The device server **92** includes a device server program **98** which in the exemplary embodiment is a JAVA program that enables communication with the JAVA applets and the device server application **100**. The device server **92** further preferably includes a monitor software application **102** which is operative to monitor device operation instructions. The monitor software minimizes the risk of fraud or abuse in a manner later explained.

[0101] Returning to the sample transaction, as represented in **FIG. 5**, in response to receiving the enable card reader message from the device application portion **84**, the device server **92** is operative to generate a message through the intranet **16** to the device interfacing software portion **64** of the ATM **12**. This message which comprises an HTTP record including instructions for operating the card reader, is directed to the IP port indicated **74** where the device interfacing software portion **64** communicates. In response to receiving this message, the software portion **64** is operative to send a message or messages on the control bus **50** which enables card reader mechanism **38**.

[0102] Continuing with the exemplary transaction, as represented in **FIG. 6**, the input of the card by the customer to the card reader **38** is operative to cause the card data to be read and the device interfacing program portion **64** to send a message to the device server **92** indicating the card data has been read. This message is transmitted by the device server through the intranet **16** to the device application portion **84**. The device application portion then sends a message to the device server requesting the card data. The device server **92** transmits a message with instructions to deliver the card data from the device interfacing software portion **64** which responds with a message sending the card data through the intranet to the device server. The device server, if there is no basis for stopping the transaction, transmits an HTTP record including card data back through the intranet **16** to the device application portion **84**.

[0103] In one exemplary embodiment, the card input by a user or customer includes indicia which corresponds to an address associated with the user in the network. In such an embodiment the indicia corresponds to a uniform resource locator ("URL") address which provides information on the computer where the user information resides, as well as a directory or subdirectory which includes the user information and the name of the document or resource that includes the user information. The URL address may be encoded on a customer's card. The address may be encoded on track **3** of a magnetic stripe, in other locations within the magnetic stripe data or through encoding other readable indicia on the card. Alternatively, if the customer's card is a "smart" card which includes semiconductor storage thereon, the URL address associated with the customer may be included as part of the stored data on the integrated circuit chip on the customer's card.

[0104] Alternatively, a URL could be derived from other data on the card by accessing a database in which address data is correlated with other data read from the card. For example, conventionally encoded magnetic stripe cards include as part of the encoded account information identifying indicia which indicates the institution or entity with which the customer's account is associated. For example, in the use of debit cards the card data includes a "bank identification number" (BIN). Exemplary embodiments may include in operative connection with the computer, a data store which includes data corresponding to BIN number or other entity data identifying associated network address data. The machine may operate to resolve a network address for the customer's "home" institution in response to the identifying data. The machine may use the resolved address information from the card data, access the server operated by the entity with which the user has an account relationship. As later explained, this feature can be used to present a customer with HTML documents or other type documents which provide interface screens and transaction flows from their familiar home institution or entity, even though the machine they are operating is not controlled by that entity.

[0105] As can be appreciated from the following disclosure, the entity owning the banking machine may be a totally independent entity from the entity with which the customers have accounts. Nonetheless the customer is provided with interface outputs which suggests that the machine is one operated by "their" particular bank or entity with whom they have an account relationship. The customer may be charged a transaction fee for the convenience of using the banking machine. In exemplary embodiments, at least a portion of this fee will be shared between the customer's institution and the entity operating the banking machine which provides this capability.

[0106] The data necessary to derive the address for accessing documents associated with a customer could also be derived from inputs to readers or other input devices other than or in addition to card data, including for example biometric data which is input by a customer through a biometric reading device. Such biometric data may include for example, data corresponding to one or more fingerprints, data from the user's appearance such as face or iris scan, inputs from a user's voice, including voice prints or spoken passwords, or combinations thereof.

[0107] For example and without limitation, data input by a customer such as through a card input to a card reader may correspond to or otherwise be useable to determine an address for accessing an HTTP record, which may be a file or document which includes information which can be used for verifying the identity of a user. This record could include data corresponding to a PIN number. The information may

include biometric data corresponding to the authorized user of the card. The browser may access the record and use the contents of the record such as data and/or instructions to verify that the indicia corresponding to biometric data in the record corresponds to the biometric data of the user entering the card. Alternatively, input data representative of appearance, voice, other features (or combinations thereof) or other input data, may be used to generate one or more addresses which correspond to a user, and the content of the record at the accessed address used to verify that the user at the machine corresponds to the user associated with the record. Numerous approaches within the scope of the invention may be used. The information in the record corresponding to a user may likewise be used to authorize certain functional devices on the machine to operate for the user while other devices may not. For example, a user who is overdrawn may have information in the record accessed that prevents them from actuating the cash dispenser, while users who are not overdrawn may include information which enables such operation. Alternatively, the absence of information in a corresponding record may enable operation, while the inclusion of information selectively limits the operation of devices.

[0108] Alternatively or in addition, in some embodiments the information which is useable to determine the identity of the customer and/or their accounts may be usable by a computer in connection with the machine to generate documents such as XML documents. Such documents may be used to generate outputs from the machine presented to the customer. Such documents may alternatively or additionally include information corresponding to one or more network addresses. Such network addresses may be used to access documents appropriate for the particular customer or their transaction.

[0109] Returning to an exemplary transaction, the card data from a successfully read card is delivered responsive to the programming of the device application portion **84** to a JAVA applet associated with notifying that the card data has been entered. In response, the JAVA applet operates to generate JAVA script which configures the browser with the URL address corresponding to the data read from the card. The JAVA applet is also preferably operative to open a record schematically indicated **104** concerning the transaction, which includes the user's network address, the time and other card data. This record in the exemplary embodiment may be stored in memory as data in an object in software. The object is preferably used to accumulate data as the transaction proceeds. The data stored in the transaction data object preferably includes data input through input devices by the user as well as data representative of operations carried out by transaction function devices.

[0110] The record or transaction data object provides persistence through what may be several different transaction steps executed by the customer. The ability to use and share the data in a number of different operations avoids the need to derive it or obtain it from a customer more than once in the course of a user session involving a number of transaction steps. The use of a transaction data object enables applets to run largely independently, obtaining needed data from the transaction object. The transaction data object can be instantiated or accessed from various documents. Its content can also be instantiated and used to populate forms presented in HTML documents. The record or data object may also be used to produce an appropriate record at the end of the transaction session. This record may be stored, collected into a batch or delivered to selected addresses in a local or wide area network.

[0111] In alternate embodiments the customer's card or other article presented by the customer to the banking machine may include additional personal data concerning the customer. Such personal data may include demographic and/or marketing preference data related to the customer. This personal data may also be read by the card reader and stored in the transaction data object or other suitable storage. Such data may be used by the system to make targeted marketing presentations and/or to present other material specifically for the particular customer. The inclusion of personal data on the customer's card enables the customer to exercise greater control over their personal data that is made available to the machine and to third parties who make marketing presentations to the customer. Such an approach may be used as an alternative or as an adjunct to systems that utilize a central repository of customer personal information. The approach of allowing the customer to control what information about them is made available to others may be more acceptable to customers from a privacy protection standpoint.

[0112] As schematically represented in **FIG. 7**, in the exemplary transaction in response to the browser **76** receiving the URL network address data, the browser is operative to transmit a message through the intranet **16** to the proxy server **88**. For purposes of this example, the network address associated with the card data is that of a customer associated with the home bank which operates system **14**. As a result, the customer's address will cause the message to be directed from the proxy server **88** to the home HTTP server **90** and to access the address corresponding thereto. Alternatively, in other systems the connection may be made directly with server **90** without the intervening proxy server **88**. As previously discussed, the network address may also include portions indicative of data representative of the devices which are operative in the ATM.

[0113] In the exemplary transaction in response to receiving the message, home HTTP server **90** finds the data corresponding to the customer's address data (or other data) in its associated memory and delivers to the browser at its IP port one or more HTML documents. These HTML documents may include a screen acknowledging the particular customer by name as well as the name of the banking institution or other entity which operates the home bank computer system **14**.

[0114] In addition, the HTML document preferably includes embedded JAVA script which has a digital signature or a means to obtain a digital signature associated with the home HTTP server **90**. The script instruction included in the document in certain embodiments causes the device application portion to access an HTTP address on a server, which in the described embodiment is server **90**. The HTTP address corresponds to an HTTP record which includes at least one instruction and preferably includes a program such as a JAVA applet or Active-X file. The instruction is used to operate the appropriate transaction function device. The HTTP record preferably includes data representative of a signature, such as a digital signature. This digital signature is received responsive to the JAVA script **82** and processed

Early Warning
IPR2024-01221
Ex. 1008-65

in the device application portion **84**. A JAVA applet processes the digital signature to authenticate it, and if it is an acceptable signature authorizes operation of the banking machine. In certain embodiments the applet may compare the signature to signature data stored in memory for a predetermined relationship, such as a match. Of course other approaches of verifying the authority of servers, documents or instructions to operate the machine or particular devices therein may be used in embodiments of the invention.

[0115] After the applet verifies that HTTP server **90** or other accessed HTTP record has sent a proper digital signature, or other authorization, the transaction will be allowed to continue. If for some reason a proper digital signature has not been sent, the JAVA applet will stop the transaction and return banking machine **12** back to the condition prior to the start of the transaction by connecting the ATM to the address associated with the attract mode in home server **90**. The use of signed instructions may be used to assure that the various transaction function devices are only operated in response to appropriate messages. The use of signed instructions may be particularly appropriate for instructions that run the sheet dispenser or otherwise provide value to the user of the machine.

[0116] For purposes of this example it will be assumed that the digital signature received is a proper signature, in which case a message is returned from the browser **76** to home server **90** indicating that the transaction may proceed. As shown in **FIG. 8**, in this exemplary transaction the HTTP home server **90** then operates to deliver at least one HTML document to the browser **76**. This document includes instructions which when processed produce a visible page or screen which instructs the customer to enter their personal identification number or PIN. This HTML document preferably includes embedded JAVA instructions or other instructions which operate to cause the device application portion **84** enable the keyboard **40** of the ATM so the machine may receive the PIN number. Such a message is schematically shown in **FIG. 8** with the JAVA script **82** signaling the JAVA applet responsible for the keyboard that it has been requested to enable the keyboard. In response the JAVA applet in the device application portion **84** sends a message through the intranet **16** to the device server **92**. The device server **92** sends a message through the intranet to the device interfacing software portion **64** in the ATM. The instructions in this message cause the device software to enable keyboard **40**. The JAVA applet responsible for enabling the keyboard is also preferably operative to update the transaction record **104** to indicate that the PIN was requested.

[0117] As shown in **FIG. 9**, the PIN entered through the keyboard **40** is transmitted in a message from the device interfacing software portion **64** to the device server **92**. The device server **92** returns a message to the responsible JAVA applet in the device application portion. The JAVA applet then operates to send a message back through the HTML document handling portion and the browser **76** to the HTTP address of home server **90**. This message includes data representative of the PIN input by the customer. In some embodiments it is not desirable to display the customer's PIN on the screen. In such embodiments the keyboard applet may be operative to display a default character on the screen such as a "*" symbol or other symbol in lieu of the PIN digits. Further as later discussed it may be desirable to avoid transmission of PIN or other data through the browser, in which case PIN data may be handled as a separate HTTP message or in other manner to reduce the risk of detection.

[0118] The software operating in connection with HTTP server **90** is then operative to either verify the PIN itself or to verify the customer's PIN number and account number by sending it to the back office **94** and waiting for a response. Alternatively, customer PIN verification may be carried out in the ATM through an appropriate applet. This can be done in situations where data on a customer's card, such as an account number, or portions thereof can be correlated to the customer's PIN number through an algorithm. The embedded JAVA script in the HTML messages may include or point to an address to obtain the data and/or instructions which the applet may use to perform this verification function, including certain encryption key data. This may include user information in the HTML document or other record data that was accessed in response to the user's card data. The BIN number read from the customer's card may alternatively be used as an indicator of the approach to be used in verifying PIN data. As shown schematically in **FIG. 9**, the transaction data object **104** is also appropriately updated by the applet to indicate the entry of the customer's PIN.

[0119] In alternative embodiments the machine may include a biometric reader device or other reader type input device to accept data from a user. The user may input data through such a device which may be used in lieu of, or in addition to, PIN data to verify that the user is an authorized user. This may be done for example by comparing the user data input to information corresponding to the authorized user of the card included in a record or a document which has an HTTP address and is accessed by a browser or by an HTTP client application through an HTTP server in response to card data. Alternatively input data may be used to generate addresses for documents or records which are accessed by the browser or client, and which records or documents contain information that is used to verify the user's identity. For example, data concerning users may be stored in a data store in connection with an HTTP server, which delivers data from a record responsive to the user data, which data is used to verify the user's identity.

[0120] It should be noted that the page or screen which requests the customer to enter their PIN is shown generated from the home HTTP server **90**. This is preferably a screen that is associated with the particular URL address associated with the customer. This will be the interface of the customer's home bank and will be familiar to the customer. Alternatively, the customer address may access what may be essentially the customer's personal "home page" with the institution that operates computer system **14**. As such, it is not only something the user is familiar with, but is ideally tailored to the user's particular transaction needs.

[0121] Alternatively, the document(s) or record(s) which contain the customer data may be used to generate the addresses for other documents. The information may also be used by the computer to dynamically generate a document for the particular customer in the particular circumstances. This approach may be useful to reduce the effort associated with developing in advance a personal visual page or document for each customer.

[0122] Approaches for accomplishing this may involve including various types or categories of user information in

Early Warning
IPR2024-01221
Ex. 1008-66

the document(s) or record(s) that pertain to a particular customer. This may include information such as gender, related persons, account types, permitted transactions, customer preferences, customer interests, account balances, previous offers declined or accepted and other information. This customer information can be used by an appropriate applet among applets **86** to address and/or generate an appropriate document for the browser to access based on the customer "profile." In addition, the profile applet may take into consideration the transaction devices present in the particular machine, information on which is stored in a data store in the machine or elsewhere in the system, as well as other factors such as the day of the week and time of day based on a system clock. In this way the machine determines the appropriate document to access or generate for the particular customer under the particular circumstances. As previously discussed some personal data may be obtained from information encoded on the customer's card.

[0123] The logic used in the profile applet may act to cause documents to be built or accessed for the customer which include transaction options based on the customer information, information about the terminal and other factors. The profile applet may operate to offer transaction options or information selectively based on the customer information. For example, the operator of the machine may offer incentives, premiums, additional transaction options or advertising information selectively to customers. Certain types of customers of the institution operating the machine may receive screen outputs with options that encourage them to do more business or different types of business with the institution. Likewise, customers that are identified as customers of foreign institutions may be provided with incentives to do business with the institution operating the machine.

[0124] The profile applet may operate to cause the computer to access other documents in other servers, such as stock market data, and selectively provide it to customers. It should be understood that the profile applet may operate to determine an address or generate documents to produce initial display screens of a transaction sequence. The profile applet may also operate to provide information or access or produce documents which generate visual outputs to the customer at other points in a transaction or between transactions. This may further be used in systems in which the operator of the machine is able to sell paid advertising to third parties and then access the HTTP records such as HTML files corresponding to those third parties' products or services. Such accessing may be done based on a periodic or other basis, but may be done effectively by selecting the HTTP record to access in response to the profile of the particular customer. As later described, advertising documents may be accessed from advertising servers connected to the network. Advertising materials may be delivered to customers from the machine at various times during transactions, such as between steps controlled by documents from the server operated by the customer's institution. Advertising materials may be displayed when transaction function devices, such as a sheet dispenser are operated. The operator of the machine and/or a system in which the machine is connected, may also require payment from advertisers for presenting the advertising materials.

[0125] The continuation of the transaction flow from the point represented in **FIG. 9** for this exemplary transaction by a customer of the institution that operates computer network **14**, is schematically represented in **FIG. 10**. The home HTTP server **90** is operative in response to the customer inputting the correct PIN to send HTML documents to the HTML document handling portion of the software in the computer which operates the ATM. These messages may include information and instructions used to generate screens which prompt the customer to select a transaction. For purposes of this example, it will be assumed that the customer inputs at the touch screen **30** a selection which corresponds to the dispense of cash, which is a common transaction at an automated banking machine.

[0126] The selection of the customer through the input device of the touch screen is communicated back through the HTML document handling portion which communicates an HTTP message to the home HTTP server **90**. Server **90** then responds by sending another HTML document to the banking machine which prompts the customer to select an amount. Again the customer may input a selection on the touch screen which indicates the amount of cash requested by the customer. This HTTP message passes through the HTML document handling portion and the browser **76** to the home server **90**.

[0127] In response to the receipt of amount data from the customer, the home server **90** is preferably operative to communicate electronically with the back office **94** to verify that the customer has the amount requested in their account. This may be accomplished through a Common Gateway Interface (CGI) **106** which is in operative connection with the home server **90**. For purposes of this transaction it will be assumed that the back office **94** indicates that the money is available in the customer's account and sends a message through the CGI **106** to the home server **90** indicating that it may proceed.

[0128] As schematically represented in **FIG. 11**, the home server **90** then operates to send a document back to the HTML document handling portion in the ATM software. This message when processed by the browser preferably will cause information to be displayed on the screen which advises the customer that the transaction is being processed. In addition the HTML document returned preferably includes JAVA script which includes embedded instructions which are executed and communicated to a JAVA applet associated with the operation of the sheet dispensing mechanism **42**.

[0129] The document returned from the home server **90** may include advertising or other information instead of or in addition to the customer message. The document returned may also include an instruction which causes the machine to access or generate another document. These instructions may invoke methods in the profile applet which depend on the properties associated with the customer, the machine, the current time and/or other circumstances. This enables accessing documents that provide promotional messages such as advertising or other information to the customer while the customer is waiting for the sheet dispenser or other transaction function device in the machine to operate. It should be understood that these documents may be accessed from servers connected to the system anywhere, including servers connected to the Internet. This makes it possible to selectively present a wide range of materials to customers. It also enables operators of ATMs and other transaction

Early Warning
IPR2024-01221
Ex. 1008-67

machines to present advertising to customers, on a broad basis, or targeted to categories of customers or even targeted to individual customers on a segment of one basis. This could be advertising of the machine operator such as a bank, or advertising pertaining to virtually any type of goods or services. The advertising may also be selectively presented based on the particular transaction device being operated, the amount of funds involved or other parameters. The documents may also enable the presentation of video and sound to the customer which may enhance the effectiveness of promotions. Access to advertising documents may be tracked and payments made to the customer's institution, the operator of the system and/or the owner of the machine, by the entity associated with the advertising materials presented to the customers.

[0130] In the exemplary embodiment, the message to the JAVA applet in the device application portion **84** of the software to enable operation of the sheet dispenser results in generation of a message to the device server **92**. The message to the device server **92** to dispense cash is preferably analyzed by the monitor software **102** to check to see if the message is appropriate. For example the monitor software **102** is preferably operative to assure that the amount of cash being requested does not exceed a preset amount. It can also optionally check to verify that the amount provided to this customer within a prior period has not exceeded an amount. This may be done by the device server sending a message to the back office which includes the card data or other data it has previously received from or resolved concerning this customer. This message may pass through server **90** and its associated CGI, or other connection. Assuming that the dispense instruction is not prevented by a message from the back office or the monitor software, the device server **92** is operative to send a dispense message to the device interfacing software portion **64** in the ATM. The software portion **64** is thereafter operative responsive to the message to operate the sheet dispensing mechanism **42** to dispense the amount of cash requested by the customer.

[0131] The monitor software **102** preferably performs additional functions in the device server. For example, government regulations or good business practice may require limiting the size and amounts of deposits which may be made into an ATM. This may be advisable to prevent "money laundering" or other suspicious activities. The monitor software preferably operates to limit the amount of any single deposit to below a set limit. It may further operate by communicating with the home bank back office system **94** to prevent a series of deposits within a preset time from exceeding a certain limit. The monitor software may also work in connection with the proxy server to limit certain transactions that may be carried on at the banking machine responsive to instructions from foreign servers as later discussed.

[0132] It should be noted that in this exemplary embodiment, the JAVA applet which is operative to send the message which causes cash to be dispensed, works in connection with another applet which controls the mix of bills dispensed to a customer. Many automated teller machines have the ability to dispense two or more denominations of currency bills. It is desirable to control the mix of bills dispensed to a customer to suit that which is available in the machine and to avoid running out of one denomination of bills before the other. The bill mix applet is preferably operable to control the bill mix in accordance with the desires of the institution operating the ATM machine as well as is in accordance with the ATM machine's capabilities. Alternatively, a JAVA applet for controlling bill mix may reside in device program **70** in device interfacing software portion **64**.

[0133] As will be appreciated by those skilled in the art, the particular JAVA applets and/or configuration data in the machine may be selectively loaded from the home server **90** at machine start up or at other times. Because the applets and configuration data may be selectively delivered to particular machines, the machines may be tailored specifically to the particular currency dispensing and other capabilities of the ATM. For example, the ATM may be configured so that certain applets or groups of applets must be present to enable the machine to operate. One approach to loading such data or programs is to provide address values in the terminal software to indicate where the needed instructions to acquire the applets or data may be obtained. If the applets or groups of applets are not already present in memory of the ATM terminal at start up, the software is operative to access the system addresses for the documents which contain the required records or instructions which will cause the machine to load the required records. A browser may be used to access the addresses, and the software loads data corresponding to the instructions from the accessed documents into a memory in the ATM terminal so that the terminal has the required applets and data. Such document addresses may be accessible through the home server **90**.

[0134] Alternatively the addresses may be on a separate development server connected to the intranet **16**. In this way each transaction machine is able to load the applets and data which include the operative code needed to operate the transaction devices in the machine. Alternatively, the documents may be provided through a development server or other server that is accessible to the machine through a wide area network. The documents may be provided on the development server to provide the machine with instructions on how to acquire the operating code to carry out a wide variety of functions. The instructions may direct the machine to acquire the necessary data and code from addresses accessible through HTTP servers by an HTTP client in the machine. The data and code can be acquired responsive to instructions in one or several documents. The machine may also require that the applets loaded in this manner be signed applets including digital signatures or other authenticating features to achieve operation of certain devices in the machines.

[0135] Alternatively, embodiments may acquire the necessary applets and data from a remote data store. The data store preferably includes the data and/or programs that enable the machine to operate as desired, or have instructions on where the machine may acquire the necessary instructions and data for operation. The data may be accessible from a database server. The transaction machine addresses a query to the database server. The query includes or is accompanied by indicia from the machine which identifies the machine. This may be the particular machine such as a machine number, and/or may include indicia representative of the type or functional device capabilities of the machine.

[0136] The data store preferably includes records which have the data or programs that are to be transmitted to the

Early Warning
IPR2024-01221
Ex. 1008-68

machine. In response to the query to the server, the server retrieves records from the data store and responsive thereto delivers one or more messages to the HTTP client in the transaction machine. The message(s) includes the configuration data or applets to enable the machine to operate in the manner desired or may include instructions which indicate how the machine is to acquire such programs from servers connected in the system.

[0137] In the example shown the configuration server and data store may operate on the same computer as home bank server **90**. In other embodiments the database server may reside elsewhere in the networks to which the machine is operatively connected.

[0138] An advantage of the machines and systems which employ such features is the flexibility to change the operation and customer interface of the machine to respond to changing conditions. This may include a change in a transaction function device. Conditions may change so that certain transactions are limited or are not available. For example, a machine may normally accept deposits but its depository is full. In that situation the machine may change the documents it accesses to present messages to users through its output devices so that the deposit option is no longer offered. This can be accomplished by the applets and data loaded into the machine initially, which provide for instructions when such event is sensed. Alternatively, the machine programming may be modified by loading new applets and/or data from an HTTP server responsive to its then current status. This may be done responsive to a query to a database server which includes or is accompanied by data representative of the changed conditions or capabilities of the machine. In response the server delivers the applet(s), data and/or instructions which will operate the machine in the modified mode.

[0139] This approach eliminates the situation with conventional transaction machines where the static interface presentation on output devices offers a transaction option to a customer. Sometimes, after the customer has made the selection an indication is given that the selected transaction option is not available. The approach described herein may be used with numerous transaction options and variations of transactions. The transaction options can be readily changed from the database server on a machine by machine basis or even a customer by customer basis as previously discussed, based on the desires of the entity operating the transaction machine.

[0140] The discussion of the exemplary transaction will now be continued from the point schematically represented in **FIG. 11**. In response to the cash dispenser **42** dispensing the requested amount of cash, device interfacing software program **64** preferably operates to send a dispense operation message confirming the dispense back to the JAVA applet responsible for the dispense in the device application program **84**. As represented in **FIG. 12**, the particular applet is operative to update the transaction record **104** to indicate the dispense of currency to the customer in the particular amount. The embedded JAVA script instructions which were operative to cause the dispense of currency to the customer, also preferably include instructions to send a confirming message back to the home server **90** that the dispense is complete. The receipt of the dispense operation message indicating the cash was dispensed causes the JAVA applet to configure the HTML document handling portion to send a device response message back to the home server. The home server then is preferably operated in accordance with its programming to indicate to the back office **94** that the customer received the amount of funds dispensed. This amount is deducted from the customer's account in the records maintained by the back office system.

[0141] Generally during a transaction it is common to ask the customer if they wish to have a receipt for the transaction. This may be done at various times during the transaction flow. In the present example, after the cash has been dispensed the customer operating the machine is sent such a message as reflected in **FIG. 13**. The home server **90** is operative to send an HTML document which when processed by the browser produces a screen asking the customer if they would like a receipt. This message is displayed as part of a page on the touch screen **30** responsive to receipt of the message through the browser **76**. Alternatively the document may be generated by the machine. In response to the customer indicating that they either do or do not want a receipt, a message is returned to the home server. Again it should be understood that the screens displayed to the customer are preferably those that the customer is accustomed to from his or her home institution, and may be a part of his or her unique home page.

[0142] Assuming that the customer wishes to receive a transaction receipt, the home server **90** in the exemplary embodiment operates as shown in **FIG. 14** to send a document back to the ATM with embedded JAVA script indicating that a transaction receipt is to be printed. These instructions in JAVA script are communicated to the device application portion **84** which sends a TCP/IP message through the intranet to the device server **92**. The device server **92** in turn communicates a message with instructions to the device interfacing software portion **64** in the ATM. In response to receiving the message, software portion **64** is operative to cause the printer **46** to print the customer's transaction receipt. The JAVA applet responsible for enabling the printer is also preferably operative to update the transaction data object or record **104**. As later discussed, the applet which controls the printing of the receipt may obtain the data used in printing the receipt from the transaction data object.

[0143] It should be understood that even if the customer does not wish to have a receipt it may be desirable to print a record of the transaction in hard copy through the journal printer **48**. This may be accomplished in response to imbedded instructions which are part of the same document from the home server **90** which causes the transaction receipt for the customer to be printed, or may be part of a separate document which indicates that the customer has declined the option to receive a transaction receipt. Alternatively, the journal printer may be actuated responsive to other applets such as the applet which causes the dispense of cash, or in another manner chosen by the operator of the ATM. Alternatively or in addition, an electronic record of the information concerning the transaction may be stored in a data store. Such information may later be recovered remotely from the machine, from other system addresses. As will be appreciated from the foregoing description, the operation of the exemplary embodiment of the ATM is inherently flexible and programmable to meet the needs of the system operator.

Early Warning
IPR2024-01221
Ex. 1008-69

[0144] As shown in **FIG. 15** upon completion of the printing of the transaction receipt, the software portion **64** is preferably operative to send a device operation message to the device server **92** which is indicative that the requested device function was carried out successfully. The device server **92** is operative to send a corresponding device operation message to the device application portion **84**, and in the exemplary embodiment to the particular JAVA applet responsible for the printing of the receipt. The JAVA applet in turn configures the HTML document handling portion to generate a message back to the home server in the form of a device response message to indicate that the receipt was printed for the customer.

[0145] Having received cash and a receipt, the customer is then prompted by a display screen generated from an HTML document from the home server **90**, to indicate whether they wish to conduct another transaction. The visual page or screen prompting the customer in this regard is displayed on the touch screen **30**. For purposes of this example it will be assumed that the customer does not want another transaction and a message to that effect is returned through the HTML document handling portion back to the home server **90**.

[0146] As shown schematically in **FIG. 17** in response to receiving a message that the customer is done, the home server **90** is operative to send a "go home" message to the ATM. This message preferably includes an HTML document which when processed by the browser produces a screen display thanking the customer. This message also preferably includes embedded JAVA script which calls the JAVA applet which eventually returns the HTML document handling portion of the ATM back into connection with the URL address on the home server **90** or other network address which provides the documents that are used to output the messages for the so called "attract mode." It should be remembered that the script or instructions included in documents used in some embodiments may operate to cause a message to be sent from the document handling portion to an address on the home server which causes a corresponding HTTP record including the instructions comprising the desired applet to load.

[0147] As schematically indicated in **FIG. 18**, the "go home" command applet is operative to configure the browser **76**. After the HTML document handling portion is configured by the JAVA applet to return home, the JAVA applet may be configured to deliver to home server **90** information from the transaction record **104** concerning the transaction that was just completed. Because the exemplary transaction was with a customer of the institution that operates the computer system **14**, all the data concerning that transaction should already be recorded in the back office **94**. However it will be appreciated that this will not be the case if the transaction was conducted in response to messages from a server operated by a different institution. Also this may not be the case with certain types of transactions such as some credit card transactions, where an authorization is provided during the transactions, and at a later time transaction details are sent for purposes of settlement. Thus, all or a portion of the information from the transaction record **104** may be delivered in response to a "go home" command to the home server **90** and through the CGI to the back office system **94** where it can be identified as duplicate information and discarded. This may be done using remote method invocation (RMI) to pass or deliver the object to server **90** and then transmitting the data through messages from the server to the back office, or through messages or other techniques.

[0148] Of course in other embodiments transaction information may be stored in a database for extended periods rather than being returned after each transaction. Alternatively the ATM **12** of the present invention may include applets which are operable to deliver transaction record information to addresses other than that of the home server, if that is desired by the operator of system **14**. The computer may be configured through an appropriate applet or other instructions to deliver the stored transaction record data to selected network addresses in the system. Such record data may be delivered in encrypted form as appropriate for the particular system. Such record data may be delivered through the document handling portion of the banking machine. In alternative embodiments such data may be delivered through a separate server component operating in a computer associated with an automated banking machine. By accessing this record data the machine operator or other settlement authority may recover record data relating to transactions. Such data may also be used for recovering data that is used for determining the number and types of transactions conducted at the machine involving other institutions and/or transaction fees associated therewith. Such information may also include information on advertising materials presented to customers. Such information may be processed and used as the basis for sharing transaction fees or receiving payment from advertising entities.

[0149] The operation of an exemplary computer system when a "foreign" user uses the ATM **12** is graphically represented with regard to **FIGS. 19 through 24**. A transaction with a foreign user who is not a customer of the institution that operates ATM **12** and computer system **14**, will be operated under the control of the home server **90** and will proceed in the manner of the prior example through the point where the customer inputs their card. The customer inputs a card having indicia corresponding to a network address that does not correspond to the home server **90**. The HTML document handling portion is operative to configure a message addressed to access a URL address that corresponds to the indicia on the customer's card or other address responsive to such indicia. For example, the network address may be based on the BIN number encoded on a customer's card. The BIN number can be correlated with an entry in a Financial Institution Table (FIT) or similar cross reference for determining network address data and/or other parameters. This message is delivered to the proxy server **88** which in turn passes the message to the wide area network **18**. From the wide area network the message proceeds to the foreign server corresponding to the customer's URL address. For purposes of this example the foreign server corresponds to server **96** which is connected to the Internet.

[0150] In the exemplary embodiment of the invention proxy server **88** includes screening software graphically indicated **107**. Screening software is preferably operable to check addresses to which messages are being directed by the ATM and to selectively prevent the sending of messages to particular addresses. This serves as a "fire wall" and is desirable for purposes of preventing fraud in the system.

[0151] As shown in **FIG. 20**, the foreign server **96** is preferably operable to communicate HTTP messages,

including HTML documents, to the ATM **12** back through the wide area network **18**. This may be done using a secure socket connection such as a secure socket layer connection ("SSL") so as to minimize the risk of interception of the messages. Of course other techniques, including message encryption techniques may be used to minimize the risk of interception of the messages.

[0152] As schematically represented in **FIG. 20** the response document from foreign server **96** preferably includes embedded JAVA script is representative of or corresponds to a digital signature which identifies the foreign server **96**. This may be accomplished by loading an HTTP record including a signed applet, as previously discussed. An applet in application portion **84** in the ATM preferably operates to verify the digital signature in the manner described in the prior example, and sends a message indicating that the transaction has been authorized. The digital identity of the foreign institution will be stored in memory in the ATM for example in the transaction record data, and eventually is recorded in the back office **94**.

[0153] It should be noted that the HTML documents from the foreign server **96** include instructions so that when they are processed by the browser, the visual pages or screens of the foreign institution which the foreign customer is accustomed to seeing are output. These pages may correspond to a foreign user's "home page" which are tailored specifically to the needs of the particular user.

[0154] **FIG. 21** shows a schematic example of a document accessed through the foreign server **96** and delivered to the ATM **12**. The document from the foreign server may include embedded JAVA script which enables operation of the JAVA applets in the manner previously discussed to operate the devices **36** in the ATM. As shown in **FIG. 21** the TCP/IP messages to the devices from the JAVA applets pass from the device application portion **84** to the device server **92**, and the instructions therefrom are passed to the device interfacing software portion **64** in the ATM. Device operation messages take a reverse path. As these messages pass through the device server **92**, monitor software **102** monitors them to minimize the risk of fraud or abuse.

[0155] As indicated in **FIG. 21**, the documents from the foreign server **96** may be operative to output through the touch screen **30** a request for the customer to input their PIN. The embedded JAVA script instructions would, as in the sample transaction previously discussed, include instructions that enable the keyboard **40** to accept the customer's PIN. As in the prior example, a transaction record **104** which includes a shared data object concerning this transaction would be opened by the device application software portion. As previously discussed, provisions may be made to prevent the passage of PIN data through the browser if desired.

[0156] **FIG. 22** indicates the return of the device operation message and PIN data to the JAVA applet, which in turn transmits the data back to the foreign server **96** through the wide area network **18** using the secure socket connection. From this point the transaction proceeds generally as previously described, except that the foreign server **96** sends the HTTP records, including HTML documents, and receives the messages from the document handling portion of the ATM. The foreign server **96** includes the JAVA application software necessary to include the embedded JAVA script in the documents that are sent to the ATM to operate the devices **36** in the machine.

[0157] As the foreign server **96** operates the machine, the monitor software **102** in the device server **92** is operative to monitor the messages in the manner previously discussed. Such monitoring would for example, operate to prevent the dispense of unduly large amounts of currency out of the machine. The monitoring software may also operate to restrict certain foreign institutions to a subset of the transaction machine devices or capabilities. This is done based on data stored in memory which limits the devices or activities that can be carried out from documents at certain addresses. This may be achieved for example through the use of code plug-ins which implement a class of the transaction objects which limits the operations that can be performed. For example, the operations which enable connection to the foreign server may instantiate the objects which provide specified limited capabilities for messages received from the foreign server. This may for example limit the amount of money dispensed, prevent operation of a check acceptance device, limit the dispense to printed documents such as tickets, prevent operation of the cash dispenser or limit use of the machine in other appropriate ways. This may be done based on the addresses or portions of addresses for documents.

[0158] If the capabilities of the machine exposed to the foreign customer are limited, the foreign customer may be provided with a visual interface from the foreign bank based on the transactions the machine can perform and that the owner of the machine will allow. As a result the documents accessed at the foreign bank server may be a variation of what the customer would be provided at a machine operated by the foreign bank. This could be based on documents specifically developed for operating foreign machines, or could be a variant of the usual foreign bank interface with visual indications that certain transactions are not available. In some instances the interface may indicate that some transactions are available with an associated service charge.

[0159] The ATM of the described embodiment may enhance security by limiting the addresses that the browser may access. This may be done by maintaining a list in the memory of the machine. This list may be maintained in HTTP record(s) (including documents) accessible through the home bank's intranet. The machine may access the record periodically and update the memory data. This record may itself require a digital signature corresponding to a signature in the terminal memory before the data will be loaded into terminal memory. This information may also include the instructions and information for the ATM to verify that the messages it receives by accessing documents on the foreign server are genuine. This may include digital signatures which when transferred using public key or private key encryption techniques verify the messages as genuine. The machine checks to be sure the signature in the records accessed from the foreign server corresponds to the digital signature for that address stored in memory, and enables operation of transaction devices, such as the cash dispenser, only when such correspondence is present. Of course various approaches to verifying and encrypting messages may be used in various embodiments. As used herein signatures or signed records encompass any indicia which is included in or is derivable from a record which is indicative that it is authorized.

[0160] As can also be appreciated from the foregoing disclosure, the foreign server **96** may communicate to the

Early Warning
IPR2024-01221
Ex. 1008-71

user with outputs through the touch screen in a language that is different from that normally used by the customers of the institution that operates the computer system **14**. As a result the HTML documents may cause the display of requests to dispense currency of a type or in an amount which is not included in the ATM. To accommodate this situation an applet may be included in the device application portion **84** to deal with requests for foreign currency. The foreign currency applet causes the ATM to send a message back to its home server for purposes of calculating a closest amount which may be provided to the customer in the available currency in the ATM which corresponds to what the customer requested. As will be appreciated, this applet will be operative to call the particular function address within the home server **90** that is capable of providing this function. When the dispense is made, the applet is also operative to indicate to server **96** that the amount dispensed differs somewhat from the amount the customer requested. Of course in other embodiments, other approaches may be used. Alternatively an applet in the machine may generate visual displays that show equivalents in local currency when foreign currency amounts are displayed or processed. This may include presenting both amounts on visual displays presented to a user. Alternatively additional browsers operating in the bank machine as later discussed may produce visual outputs that advise the user of information such as exchange rates or other information pertinent to the customer's transaction.

[0161] As represented in **FIG. 23**, when the foreign customer has completed their transactions as indicated through the touch screen **30**, the foreign server **96** is operative to send the "go home" message back to the ATM. The receipt of this message is operative in the manner previously described to cause the device application portion **84** to operate responsive to the embedded JAVA script instructions to configure the HTML document handling portion to cause the browser **76** to reestablish communication with the home server **90**, or other designated document address.

[0162] As indicated in **FIG. 24** the applet in the device application portion **84** which processes the "go home" message is preferably operative to reconnect to the home server **90** as well as to send the transaction record information in record **104**. This transaction record information which in an exemplary embodiment is packaged in a data object, includes the customer name, the foreign institution name, digital identifier, amount information concerning amounts dispensed, transferred or deposited, and all other pertinent transaction data. The transaction data is used by applets in performing transaction steps in which any portion of the data is required. At the completion of the customer's activity at the machine an applet provides a transaction data message which includes at least a portion of the collected data. This data is communicated from server **90** through the CGI **106** to the home bank's back office **94**. This information is stored in the back office for later use for purposes of settlement with the foreign bank operating the foreign server **96**. Alternatively or in addition, transaction data may be recorded in the terminal in memory such as in an electronic journal as well as in hard copy on a journal printer. Transaction data may be stored for downloading in a batch or by passing objects including data from many transactions. Objects can be instantiated from a remote server such as by remote method invocation. Batch data may be communicated at times and to addresses as may be stored in memory in the terminal configuration data.

[0163] An advantage of some embodiments is that transaction data may be delivered to addresses in a local area network or in a wide area network such as the Internet. This facilitates conducting wide varieties of transactions and enables directing messages related to tracking use (such as for electronic purse type smart cards) or for settlement of various transaction types to a selected system address.

[0164] It will be appreciated that the described embodiment of the automated banking machine and system provides the advantage that when the machine is connected to a wide area network such as the Internet, customers are able to carry out their banking transactions virtually anywhere in the world. Further, despite the broad capabilities of the system, because the machine may be monitored locally, both in terms of connection and activity, the risk of fraud is minimized.

[0165] Embodiments may include a further feature to facilitate access to documents in the network to which the machine is connected. This feature is operative to determine if an HTTP record such as an HTML document or other item is accessible at an address for downloading before the computer will attempt to access the record. This avoids transaction time outs that might otherwise occur as a result of inability to access a record due to the server through which the record is normally accessed being down. Other embodiments may consider both the size of the record and the transfer rate and determine that a transfer speed for the record is not sufficiently rapid, so that an alternative record should be transferred.

[0166] In one embodiment this feature is achieved through use of a separate program or applet which checks to see if a server that the computer will subsequently want to access is alive. The applet operates responsive to receiving an address or portion thereof, to which a connection will be made. The applet operates to make a socket connection to the address and loads a small but sufficient amount of the record or otherwise operates to determine that the server through which the record must be accessed is alive. In response to the applet verifying the operation of the remote server, or otherwise determining that conditions indicative that the record may be accessed or loaded, the computer then operates so that the browser or similar software component is enabled to navigate to the address at the appropriate time in the transaction sequence. If the applet is unable to detect that the remote server is alive, or determines that it does not appear the record may be successfully accessed or loaded, steps may be taken to access alternative addresses, generate another output or to discontinue the transaction. Alternative addresses to access may be based on data stored in the memory of the terminal or may be obtained by accessing documents either locally or remotely which include data from which alternative addresses may be obtained or derived. Alternative addresses are similarly checked to make a determination that the records can be accessed before attempts are made to access the alternative records. This approach avoids delays in carrying out transactions.

[0167] Alternative embodiments may employ other approaches to determine if desired HTTP records such as HTML documents may be successfully accessed and/or downloaded adequately before the browser providing the

Early Warning
IPR2024-01221
Ex. 1008-72

customer interface attempts to access the document. Such embodiments may consider in determining whether the document can be successfully accessed, the transfer speed or other conditions related to system operation or document content. For example, the applet which tests to determine that the HTTP record can be accessed, or a further applet, may determine the transfer rate at which the record can be transferred to the computer. The rate at which the data can be transferred may be compared to data stored in memory, and if the rate is slower than the data representative of the desired stored rate an alternative record is accessed. This may be for example an HTML document stored or generated locally in the machine. Other embodiments may include programs which consider the size of the HTTP record and the transfer rate in determining a transfer speed. Such programs then determine if the record can be transferred fast enough to suit the parameters established in the configuration in memory, and if not, alternative addresses are accessed. Such alternative records may be similarly tested for transfer speed before being transferred.

[0168] Programs may also consider other factors in deciding to access a particular address, such factors may include for example day and time information, or information from sensors such as sensors in a floor or video imaging systems indicating that other persons are waiting to use the machine. In this way access to documents that have extensive outputs which may tend to prolong transactions can be avoided even when records can be loaded at an adequate speed.

[0169] In alternative embodiments multiple browsers may be operated in the computer(s) of the ATM for purposes of processing instructions in documents. Some browsers may operate to process instructions and may not provide outputs that may be perceived by users of the machine. Such browsers may be operated to provide instructions that are used for operating transaction function devices. For example, a browser which does not produce an output which is visible on a display, may process documents which produce outputs that are operative to cause a printer to produce printed documents.

[0170] Other embodiments may operate multiple browsers which provide outputs which can be perceived by customers operating the machine. For example, multiple browsers which are each capable of providing visual (and/or audio) outputs may be operated in respective servers in the machine simultaneously to process documents and provide simultaneous outputs to the user. Such browsers may also process instructions for operating transaction function devices. This may provide the capability for a machine to conduct simultaneous transaction types.

[0171] In an exemplary embodiment an ATM has operating therein five (5) visible browsers. Each of these browsers is capable of providing a visible output on the screen of the ATM. **FIG. 32** shows an exemplary output screen **196** in which each of the browsers produces a visible output. The main browser output **198** is shown centered on the screen. The main browser output **198** is flanked vertically by a top browser output **200** and a bottom browser output **202**. The main browser output is flanked horizontally by a left browser output **204** and a right browser output **206**. Each of these browsers are capable of processing documents and communicating with network addresses in the manner previously discussed. Some or all of the browsers may also be operative to pass instructions so as to control transaction function devices in the machine. Alternatively, some browsers may be used primarily to provide outputs to the customer and may not be configured to utilize instructions in accessed documents to operate certain devices in the machine.

[0172] In the exemplary embodiment, all five (5) browsers are operated although they may not all provide visible outputs. Initially only the output **198** from the main browser is made visible. The other browsers are made visible using a "show" method which identifies the browser output size. This is done in response to show and size instructions included in documents such as HTML documents. Such instructions are preferably included in documents accessed by the main browser, but may be in documents accessed by other browsers. In the exemplary embodiment browser size is defined by a single thickness indicator. In the case of the "top" and "bottom" browsers, thickness refers to a vertical dimension from the adjacent top or bottom edge of the display, respectively. In the case of the "left" and "right" browsers, the thickness is a horizontal thickness from the respective adjacent edge of the screen. In the exemplary embodiment the output of the main browser is resited automatically to fill the remaining visible space on the screen not occupied by the outputs of the other browsers. In this embodiment the top and bottom browsers when activated occupy the entire width of the screen, while the left and right browsers occupy the space between the top and bottom browser outputs if visible. Other approaches may be used in alternative embodiments.

[0173] The use of multiple visible browsers provides the capabilities of providing multiple simultaneous visible outputs based on different documents accessed at different network addresses. This also enables the development of applications providing a series of documents that enable making outputs produced from documents visible at various selected points in a transaction sequence. Such capabilities may be particularly useful in presenting advertising or promotional materials to customers during a transaction. Such capabilities may also be useful for displaying messages in multiple languages for operating the machine. Such capabilities may also be useful in presenting exchange rate information in transactions involving a cardholder from a different country or in conducting currency exchange transactions. The outputs of multiple browsers might also be useful in displaying to the customer documents generated for the customer or documents including information of particular interest to the customer such as the current status of particular stocks or investment opportunities.

[0174] **FIGS. 33 through 35** show examples of screens generated in the exemplary embodiment when certain different browsers are used to produce visible outputs on a screen. **FIG. 33** shows a screen **208** in which the left browser output **204** and the top browser output **200** are visible with the main browser output. **FIG. 34** shows a screen **210** in which the top browser output **200** and the bottom browser output **202** are visible with the main browser output **198**. **FIG. 35** shows a screen **212** which the right browser output **206** and the main browser output **198** are visible. It should be understood that many variations of screens are possible and that such screens may include configurations in which the main browser output is not visible.

Early Warning
IPR2024-01221
Ex. 1008-73

[0175] As can be appreciated, the operation of multiple browsers in the machine enables carrying out simultaneous transactions. For example, a user may be provided with the opportunity to acquire goods or services through documents processed by one of the browsers while a banking transaction is in progress. Such a browser may work in connection with the other components or the machine as previously discussed, to enable operation of and to receive inputs through various transaction function devices. Such inputs may include inputs accepting or declining offers to purchase goods or services. The transaction data object may also be invoked by the applications operating the other browsers to make such offers. This enables delivery of account data associated with the user which was previously obtained in connection with a banking transaction. This also enables the customer to conveniently elect to pay using the account currently involved in a transaction. Each browser may also develop its own transaction data object or records to use for purposes of accomplishing settlement, as well as for storing data concerning what occurred during a transaction.

[0176] While the exemplary embodiment of the invention has been described in connection with using multiple browsers to display information in the course of a banking transaction and to enable multiple transactions to be ongoing simultaneously, it should be understood that the use of multiple browsers providing visible and non visible outputs may be used for numerous and varied purposes that are within the scope of the present invention.

[0177] While the described embodiment of the automated banking machine and system is shown with regard to a particular type of machine that is made specifically for connectibility to local or wide area networks, conventional automated banking machines may also be adapted to include such capability. Specifically the document handling portion and device application portion may be included with other conventional software which operates within one or more computers in operative connection with an automated banking machine. This enables such ATMs to operate either in the conventional proprietary network or as part of a wide area network. In addition, automated banking machines may be configured to operate their devices through the device interfacing software portion of the invention or through a different software interface when operating in a conventional network. Such machines may switch to requiring device messages to be passed through a device server when operating under the control of a server within the wide area network to maintain security within the system. In this way a single ATM could operate in proprietary networks in the manner of current ATMs as well as in the network configuration of the system of the invention.

[0178] Alternative embodiments operate to communicate transaction messages used in a proprietary ATM network. This may be accomplished by using an interface such as a CGI in connection with either the document handling portion of the ATM or the HTTP home server or other server. The CGI operates in connection with a message conversion program and database to cull the necessary data from the documents and response messages and generate the defined transaction request messages appropriate for the proprietary transaction network. Likewise, the message conversion program and CGI operate to receive function command messages from the proprietary network and convert them and generate appropriate documents and/or TCP/IP messages for use by the ATM. Because these proprietary network formats are defined and the data necessary to produce and interpret the messages are known, the use of the ATM **12** directly in a conventional proprietary ATM network is achieved.

[0179] Conventional ATM transaction messages are defined layout messages that do not include documents such as mark up language document or HTTP messages. An example of known conventional messages used to operate ATMs are Diebold 91X messages, NCR PAS messages and IBM 473X messages. Such messages generally involve transmission of a request message from an ATM in a defined layout including customer input data (account/pin) and an indication of the type and amount of transaction requested. The request message is received by an ATM host computer which sends back a response message with a defined layout which includes an indication whether the transaction is authorized. The ATM then returns another message to the host computer indicating whether the machine was able to carry out the transaction. The messages used in such conventional proprietary networks generally occupy relatively little bandwidth.

[0180] In connecting the ATM to such a network, a server is provided. The server is in operative connection with a memory which includes a relational database or other data store which holds the message conversion and document creation data. In one configuration, the server is connected to the document handling portion through a network, or may reside on the computer of the ATM. The server produces the documents which the browser accesses and which include the transaction device instructions. The server (or a connected server) communicates the conventional messages with the host. One server may provide an interface for several ATMs connected to it in a LAN, or alternatively, each ATM may have its own server operating therein.

[0181] The ability of ATM **12** to communicate in a proprietary network also enables operation of the ATM in a manner in which the interface is generated by a user's home institution in the manner previously described, but in which transactions are authorized through messages directed through a proprietary ATM network. This achieves the security of using the proprietary network while providing the customer with the advantages of the familiar home bank interface and/or "personal home page" interface.

[0182] In such a configuration the ATM transaction function devices may be operated in a conventional manner in response to conventional ATM transaction messages such as Diebold 91X messages, NCR PAS messages or IBM 473X messages, in the proprietary network. The customer output devices, such as the display (and speakers if provided) communicate outputs responsive to documents processed through a browser connected to a local or wide area network. The browser accesses documents to prompt a customer through operation of a transaction, but the documents do not include instructions which enable operation of devices such as the cash dispenser absent authorization from the proprietary network.

[0183] In one configuration the browser may be operated by the computer in response to the status of devices in the machine, as the devices are operated in response to conventional ATM messages. In this manner the browser may be navigated to selected addresses, including addresses which are associated with the customer based on customer input

Early Warning
IPR2024-01221
Ex. 1008-74

data. However, as the documents received by the browser will not independently operate the transaction function devices, there is less need for security measures in accessing documents. As a result, the customer may still operate the machine in response to a familiar and unique interface, and marketing information such as advertising or other material may be presented in the transaction sequence using the techniques previously discussed.

[0184] In other embodiments machines may perform some device functions based on conventional messages, while others may be performed in response to instructions in HTML documents or other HTTP messages. For example HTML documents may provide considerable data for use by printers or other output devices. Some embodiments may access documents with instructions, but may ignore some and act in response to others. The approach may be selected by the systems operator by configuring the software based on their requirements.

[0185] It should be understood that embodiments may also provide for the generation of the appropriate documents which are processed by the document handling software. Such documents may be dynamically generated responsive to information delivered through messages from the ATM that include instructions and data which are indicative of customer or transaction related information. This enables messages to and from the ATM to be communicated with a much more limited number of network addresses. The dynamic generation of various documents such as XML documents may be accomplished by one or more computers based on data stored in one or more data stores. A plurality of documents may be generated corresponding to a number of entities from a single server. Such documents may be tailored to the transaction options or promotional information provided by each such entity. The documents may include the graphics, icons, prompts, trademarks and other visible features and/or embedded instructions corresponding to non-visible outputs as appropriate for the corresponding entity. In this way documents corresponding to a plurality of banks, service providers, advertisers and other entities may be generated by one or more computers and delivered through one or more servers as appropriate responsive to the information in messages form the ATM and information stored in one or more data stores operatively connected to the computers.

[0186] A further advantage of a system configuration of the exemplary embodiment is that it has enhanced flexibility for communicating messages associated with the ATM. The device manager **68** preferably generates status messages associated with the status of devices **36**. These status messages may commonly represent information about conditions which exist at the devices. Such messages may indicate that supplies of paper for printers or currency, are low or are depleted. Other messages may indicate that devices are not functioning properly. Often such messages indicate that the ATM requires servicing. All such types of messages are referred to herein interchangeably as either status or fault messages.

[0187] The device interfacing software portion **64** in the exemplary embodiment communicates through the intranet **16** using TCP/IP messages. While the messages associated with exemplary transactions previously described are directed to the device server **92**, the software portion **64** may include a server and be configured to address fault and status messages to other addresses in the intranet or the Internet. For example, such fault or status messages may be directed to a software application which delivers messages to a service provider. Further, fault messages may be selectively directed based on the nature of the fault indicated. For example, fault messages indicative of a need to replenish currency or supplies may be directed to an address in the intranet associated with an entity who has responsibility for replenishing supplies. Alternatively, fault messages which indicate a need for other types of servicing may be directed to an address associated with an entity who can provide the type of servicing required.

[0188] Alternatively, the selective dispatching of fault messages to addresses in the intranet **16** may be accomplished by appropriately configuring device server **92**. In addition, either software portion **64** or device server **92** may direct fault messages from the ATMs to a fault handling system such as to a computer operating Event Management System™ software available from Diebold, Incorporated. Such software is operative to resolve the nature of the fault condition and to notify appropriate personnel of the corrective action to be taken. Examples of fault handling system approaches are described in U.S. Pat. No. 5,984,178 the disclosure of which is incorporated herein by reference.

[0189] The ATM **12** may further include a software function to assist in diagnosing problems and providing remedial service. As graphically represented in **FIG. 2**, alternative embodiments of the ATM **12** may include a mini-HTTP server **109** which is in communication with the device interfacing software portion **64**. Server **109** is configured to receive device status messages and to produce HTTP records including documents in response thereto, which provide data representative of device status to a diagnostic device **110** such as a hand-held computer terminal. Server **109** includes a CGI for interfacing with the device software so that a technician may access the information in the records accessible at the HTTP addresses related to status messages, and input test and corrective instructions through diagnostic device **110**. The HTTP records and/or documents generated by server **109** may preferably include graphic and/or audio instructions indicative of conditions such as problems, as well as corrective action data and repair instructions.

[0190] In alternative embodiments the functions of the mini-HTTP server **109** may reside in device server **92**. This may be particularly appropriate where the function of the device server resides on the computer in the ATM. Regardless of where the function resides the use of the visual and audio output components generated from processing documents associated with maintenance and diagnostic messages, facilitates servicing of the ATM.

[0191] The records or documents delivered through the mini-HTTP server may include instructions that correspond to the status or fault conditions. Such records or documents may be accessed locally as previously discussed, or may be accessed remotely. A technician using a hand-held computer which includes a browser or other software operative to access the HTTP records may access the documents locally for purposes of maintenance, diagnosis and servicing. In some situations the customer interface and browser associated therewith may be used to access the mini-HTTP server, or a separate browser, display and input devices on the

Early Warning
IPR2024-01221
Ex. 1008-75

machine and intended for use servicing activity may be used. Alternatively, the fault and status messages may be monitored from terminals at locations anywhere that are connected in the network. The mini-HTTP server handling status and fault messages may also be configured to send an e-mail or other message to a selected network address or a group of addresses whenever a particular condition or group of conditions exist. Additional examples of sending an electronic message with a server are later discussed in greater detail in other exemplary embodiments.

[0192] A further useful aspect of the exemplary embodiment is that HTTP messages may also be sent to the mini-HTTP server to attempt to correct problems. Such messages may include instructions that are operative to cause the running of diagnostic tests and the delivery of messages indicating results. It may also include messages which cause devices to operate to test or attempt to clear jams and other malfunctions. This can often be done from remote locations. Of course, when there is a significant risk of unauthorized access to the server handling fault or status messages, appropriate security measures such as the type previously discussed, should be taken.

[0193] The HTTP records which indicate the status of the transaction function devices may have different forms depending on the software configuration and the needs of the system operator. In some embodiments the device status information for one or more devices may be represented by indicia contained within a data object. The data object may be transferred to other connected computers to provide the status data. The transfer of the data object may be accomplished by remote method invocation (RMI) for example. The data in the transferred data object may then be used to generate message and/or outputs desired by the system operator. This technique may be particularly useful when the operator wishes to connect the machine to an existing monitoring system and indicia included in the data object can be used to generate outputs or messages indicative of device status that can be processed by the existing system. Plug-ins may further be used to achieve communication between existing monitoring systems and transaction machines which have different types of status conditions or different types of message formats. This includes machines which have different types of transaction function devices and capabilities.

[0194] The technique of transferring a data object may also be used to conduct testing or modification of transaction function devices. For example, indicia in the data object may be modified by a servicer and the object passed back to the machine. The software in the machine may cause the transaction function devices to operate or change conditions or programming in response to the modified data object. This may include for example clearing a fault indication or causing a device to operate to clear a jam or to conduct a test. The results of such activity may be reflected in modified indicia in the data object which may then be transferred to the computer in the diagnostic terminal. Of course, the approaches discussed herein are exemplary and other approaches will be apparent to those skilled in the art from the description herein.

[0195] **FIG. 25** shows a schematic view of a network configuration for an alternative embodiment of an automated banking machine. The embodiment shown in **FIG. 25** includes an automated banking machine specifically adapted for operating in connection with conventional automated banking machine systems such as systems which operate using Diebold 91X ATM message formats or other non-HTTP conventional format. A host computer **120** in this exemplary embodiment is a conventional ATM host which communicates using such messages. The host communicates with an interface server schematically indicated **122**. Interface server **122** operates in the manner previously discussed and is in operative connection with a memory that includes the information necessary to convert HTTP messages that pertain to a transaction request to a 91X request message or other conventional message, which can be handled by host computer **120**. Likewise interface server **122** and the instructions and data stored in memory are operative to convert a conventional 91X command message or other conventional command message from the host **120** into HTTP messages which can be used by the automated banking machine to carry out the command. Similarly interface server **122** is operative to receive the HTTP messages which correspond to the response of the automated banking machine to the commands and to produce a 91X response message or other conventional response message to the host.

[0196] In accomplishing these functions the interface server communicates with an interface client **124** which in the exemplary embodiment is a COMM plug-in which operates on the banking machine terminal under a Windows NT® operating environment. Interface server **122** also includes a command/status gateway **126**. The command/status gateway is operative to receive command and status messages from the software portions handling the functional devices within the machine. The messages concerning the devices are used in producing transaction messages to send back to host **120**. In addition, the command status gateway portion also produces status messages indicative of the status of devices which may also be communicated to the host.

[0197] The interface server **122**, command status gateway portion **126** and interface client **124** may reside in software on the automated banking machine terminal. In this configuration the terminal appears to the host computer to be a conventional machine. Alternatively interface server **122** and command status gateway portion **126** may reside on a separate server, while the interface client portion **124** may reside on the terminal. This enables the interface server **122** to handle a number of automated banking machines by connecting the machines to the interface server through a network.

[0198] The alternative configuration of the automated banking machine system shown in **FIG. 25** is particularly adapted for use in connection with existing ATM system. The machine includes a computer with a document handling portion **128** which includes one or more visible or non-visible browsers which operate in the manner of the embodiments previously described. The document handling portion is alternatively referred to as a browser herein for purposes of simplicity. The document handling portion operates in connection with a network **130** to access HTTP records in the form of documents through servers **132**, **134** and **136**. For purposes of this example server **132** will be considered the server of the home bank which operates the automated banking machine. The browser portion **128** is enabled to access documents of its home bank for purposes of obtaining

Early Warning
IPR2024-01221
Ex. 1008-76

content and instructions for purposes of outputting information to customers as well as for operating devices on the machine. Servers **134** and **136** are representative of other servers which the automated banking machine may be instructed to access for purposes of downloading documents which include information or instructions. Often such documents from non-home bank servers will include information which is to be presented to customers such as advertising, promotional material, stock quotations or other types of information. It should be understood that the servers **134** and **136** may be directly connected to network **130** or may be accessed through other networks and servers. In some embodiments such servers may be accessed through the Internet for purposes of providing documents to the automated banking machine.

[**0199**] Document handling portion **128** in this exemplary embodiment includes a terminal theater software portion schematically indicated **138**. Terminal theater portion **138** is schematically shown in greater detail in **FIG. 26**. Terminal theater portion **138** includes a back stage frame **140** and a theater frame **142**. The back stage frame **140** although it resides in the browser, is not visible on the screen of the automated banking machine. The theater frame **142** is a visible frame and controls what is shown to the customer.

[**0200**] As schematically represented in **FIG. 25** the HTML document handling portion also includes a terminal director portion **144**. The terminal director portion includes directors which are related instances of applets which are used in carrying out particular types of transactions. The terminal directors generally correspond to the operation of the JAVA applets in the previously described embodiment.

[**0201**] The automated banking machine of the exemplary alternative embodiment further includes a transaction services application (TSA) schematically indicated **146**. The transaction services application provides security, terminal condition, terminal authorization and key management services within the automated banking machine. The transaction services application includes a function for communicating HTTP messages with the interface server **122**. The transaction services application may also communicate through a network such as network **130** in a manner later explained. The transaction services application also provides a server function which enables the transaction services application to carry out the functions of the device server **92** in the previously described embodiment.

[**0202**] The automated banking machine of the alternative embodiment further includes JAVA common device interfaces schematically indicated **148**. The JAVA common device interfaces in the exemplary embodiment are related instances of applets which control and coordinate the operation of the functional devices **150** of the machines which perform transaction functions. The functional devices may include devices of the types described in connection with the previous embodiment or other types of devices which operate to carry out a function related to a transaction. The JAVA common device interfaces **148** communicate with the functional devices through common device interfaces schematically represented **152**. The common device interfaces (CDIs) provide an interface that controls the electromechanical modules in the functional devices included in the automated banking machine. The common device interfaces are schematically shown in connection with a diagnostic server **154**. The diagnostic server operates in a manner similar to server **109** of the previously described embodiment. The diagnostic server **154** is useful in diagnosing status and in correcting problems with the devices in the automated banking machine.

[**0203**] Referring again to **FIG. 26** the backstage frame **140** within the terminal theater portion **138** is a component called the backstage applet **156**. The backstage applet **156** is preferably a relatively thin component. Instructions referred to as script included in documents accessed by the browser selectively cause the backstage applet to notify a terminal director when an action is to take place in response to the instructions included in the accessed document. The backstage applet also operates to request that a new document be accessed. The backstage applet also provides access to the shared transaction data object previously discussed which holds transaction data.

[**0204**] The theater frame **142** controls the user interface as seen by the user of the automated banking machine terminal. Client HTML schematically represented **158** in the theater frame **142** defines the identifying indicia associated with events sent to a director manager through the backstage applet and provides an interface to the director manager's public methods. The director manager schematically indicated **160** in **FIG. 26**, has a class which resides in the transaction services application (TSA) **146** as shown. The director manager class residing in the TSA process is operative to load the terminal directors **144** to the document handling portion. The director manager also includes a backstage applet class that resides in the backstage frame **140**. The backstage applet class of the director manager provides an interface for the client HTML to make requests on the director manager. Instructions in documents can pass events through the backstage applet **156** to the director manager. Such events include a request to authorize a transaction. Such requests may also include indications that the customer has completed a transaction or that a document loaded by the browser includes instructions requesting that the session be terminated. Other events which can be passed through the director manager include print events. Other events in this exemplary embodiment which can be passed through the backstage applet to the director manager include an indication that an entry was canceled, or other defined user events.

[**0205**] In response to receiving events the director manager of the embodiment shown responds to instructions in documents accessed by the browser to perform functions which include changing the content of the theater frame **142**. The director manager responsive to such instructions, also changes the active terminal director class. The director manager also caches terminal director classes for later use or loads terminal director classes and documents from a list of available servers. The director manager also provides access to the shared transaction data object holding transaction data for a particular transaction. The director manager also sends terminal theater events to the backstage control class of the current terminal director and provides a screen timeout timer. Of course in other embodiments the terminal director may carry out other functions.

[**0206**] In operation of the alternative embodiment shown in **FIG. 25** the terminal directors **144** in the transaction services application **146** enables selectively accessing docu-

Early Warning
IPR2024-01221
Ex. 1008-77

ments with the document handling portion **128**. The documents accessed may include instructions which are used to operate the automated banking machine and the functional devices thereon. The transaction services application **146** is further operative to communicate the HTTP messages which are passed to the interface server **122** and which are used to generate conventional ATM messages which can be handled by the host **120**. The dispensing of currency and other transfers of value are carried out in response to approval from the host **120**, while the interface and other functions are controlled through instructions in documents accessed through the browser.

[**0207**] In an exemplary embodiment the ATM or other transaction machine communicates with the conventional ATM host by passing the transaction data object between the computer in the ATM and the interface server. This transfer is preferably accomplished by the remote message invocation (RMI) feature of software such as JAVA. Of course other methods for transferring the data object file using HTTP may be used.

[**0208**] As previously discussed, the transaction data object holds transaction data and perhaps other data pertinent to the customer or the transaction. The machine acquires data pertinent to the transaction such as account data from a card, a customer's PIN number, requested transaction(s) and amount(s), and includes this data among the transaction data.

[**0209**] Once the data needed to generate a conventional ATM transaction message is represented in the transaction data, the data object is transferred to the interface server. The interface server is in operative connection with a database **123** or other item holding conversion data as schematically indicated. The conversion data is used by the software associated with the server to generate a conventional ATM transaction request message to the host **120**. The conventional message may be formatted as a conventional 91X message or other type of conventional non-HTTP transaction message.

[**0210**] After processing the host **120** responds with a conventional response message. The components of the response message are received at the server and processed responsive to the conversion data to produce modified transaction data in the data object. This modified transaction data preferably includes data indicative of whether the requested transaction is authorized or denied, as well as other data. For example, if the transaction is denied it may include data which is indicative of the reason for the denial.

[**0211**] The transaction data object with the modified transaction data is then transferred to the computer operating the ATM by RMI or other transfer method. The transaction services application **146** operating in software receives the data object and operates the transaction function devices responsive to the modified transaction data. The transaction data object has the transaction data therein further modified by the inclusion of information concerning operation of the devices. After the devices have operated, the transaction data object with the further modified transaction data is passed back to the interface server **122**. The modified transaction data is then used to generate a message to the ATM host. The message to the host includes data corresponding to the modified transaction data. Usually this message is a conventional non-HTTP completion message indicating whether the transaction was successfully carried out by the transaction function devices.

[**0212**] The format of the non-HTTP conventional transaction messages may be readily changed in the described embodiment. This can be achieved through the use of plug-ins. The plug-ins are operative to put data into, and to extract data from, the transaction data object. The plug-ins achieve conversion between the transaction data and desired conventional non-HTTP messages. The use of plug-ins enables more readily using the ATM of the described embodiment in connection with varied types of conventional transaction networks.

[**0213**] Transaction data in the transaction data object is also preferably operative to have the computer operate the browser or multiple browsers, to access selected documents. This may be done to indicate that the transaction is authorized or denied, as well as to access specific documents responsive to components of the message. For example, customers of banks other than the one operating the ATM may be given certain promotions not presented to the bank's existing customers. The transaction data indicative of why a transaction is denied can be used to access documents which provide an explanation, or can encourage the customer to take other action, such as to take a cash advance on a credit card or to apply for a loan.

[**0214**] The system schematically shown in **FIG. 25** is an example of an automated banking machine system that achieves the wide variety of interface options available through the use of an HTML interface while preserving compatibility with existing banking machine systems and the security techniques associated therewith. Of course in other embodiments alternative approaches and configurations may be used.

[**0215**] A further advantage incorporated into the system schematically represented in **FIG. 25** is the ability to operate the software components of the described embodiment in existing automated banking machines. As will be appreciated, the handling of HTML or other types of documents in conventional computers requires inputs through a QWERTY type keyboard as well as mouse clicks in locations corresponding to icons or other features on documents to successfully navigate and use such documents. Conventional automated banking machines generally do not include a mouse or full keyboard. Rather, conventional automated banking machines generally include an alphanumeric keypad similar to that used on telephones, as well as function keys. Embodiments enable the operation of the system with terminals which have such interfaces operate in a manner which attains benefits of the invention.

[**0216**] **FIG. 27** shows an example of a conventional automated banking machine interface **162**. Interface **162** includes an output device which includes a screen **164**. Screen **164** may be a CRT, LCD or other conventional display screen. In the embodiment shown screen **164** is not a touch screen as in the previously described embodiment. A plurality of function keys **166** are disposed at locations adjacent to the screen **164**. A keypad **168** is also included in the interface **162**. Keypad **168** includes alphanumeric keys as well as certain other dedicated keys such as "cancel, ""correct" and "ok." Other keys on the keypad are generally blank but in some instances may be used.

Early Warning
IPR2024-01221
Ex. 1008-78

[0217] In the operation of a conventional automated banking machine, screen data which is generated from information stored in the terminal memory produces defined transaction screens which are presented graphically on the screen **164**. The screens appear in a sequence in response to the transaction function selected by the customer. Conventional screens also generally include text or graphics representative of selections that can be made by a customer. These text or graphic options generally include lines or other indicia which extend to the edges of the screen adjacent to one of the function keys **166**. A user is enabled to select the options by pressing the function key which is pointed to by the selection. Likewise in the operation of the automated banking machine a user is enabled to input the alphanumeric characters which comprise the PIN number as well as numeric amount information and other instructions by pressing the keys in the keypad **168**.

[0218] In an exemplary embodiment the software operated in the automated banking machine operates to convert standard ATM key inputs to operating system events such as a mouse click in a desired location or an input from a QWERTY type keyboard. The software components which enable carrying out this function are shown in FIGS. **28-30**. These functions include a keypad applet **170**. The keypad applet **170** in the described embodiment is included among the applets in the terminal directors **144**. The keypad applet **170** supports a subset of the keyboard common device interface (CDI) functionality.

[0219] The keypad applet **170** coordinates with a keyboard command server which operates in the transaction services application **146**. The server in the transaction services application communicates with the common device interface for the keypad and function keys, schematically indicated **172**. The key CDI in the described embodiment is a JAVA program which is referred to as a wrapper for the common device interface associated with the function keys and the keypad.

[0220] The software further includes a keyboard mapper program schematically indicated **174**. The keyboard mapper in the exemplary embodiment is in connection with a database **176** which stores a plurality of map sets. In the exemplary embodiment the keyboard mapper is an extension of the keyboard class of objects used for operating the keyboard. The keyboard mapper operates to store sets of keymaps in the database **176**. This is accomplished by reading information in a configuration database for the ATM to obtain the keymaps that are operated in the particular machine. During operation, the keyboard mapper selects one of the keymaps as the current set. This is done in response to the keypad applet and is based on instructions in HTTP records which are selectively accessed. The keyboard mapper may select keymaps responsive to instructions in documents processed through the browser. The keyboard mapper is also operative to enable the keypad and function keys appropriate for the particular mapset selected. The keyboard mapper is further operative responsive to the selected mapset to translate a keypad input signal or a function key input signal into a respective keyboard or mouse input signal which is then delivered to the keyboard input stream or the mouse input stream of the operating system of the computer in which the software operates.

[0221] In the exemplary embodiment the mapsets are each comprised of hash tables. Keymap objects are stored as values in the hash tables such that each object includes the values and operations necessary to convert any appropriate ATM key event to an operating system input event.

[0222] As can be appreciated in the case of function keys adjacent to the ATM screen it may be desirable to provide a mouse input to the mouse input stream that corresponds to a particular coordinate location for the mouse input. This is provided by the keyboard mapper using the selected keymap set. The various keymap sets enable the different function keys to provide different types of inputs to the computer operating system responsive to the document processed by the browser to produce the output displayed to the user. Further the keyboard mapper causes the pressing of a selected key to produce an input corresponding to a mouse click at a selected x,y coordinate position on the screen. It should be understood that either keypad keys or function keys can be used to produce mouse inputs. Likewise function key inputs may be converted to keyboard inputs. In some embodiments however it will be desirable to disable the mouse indicator on the screen such that the user does not notice a usual mouse icon. Such disabling may include in some embodiments reducing the size of the mouse icon such that it is so small that it cannot be readily seen by a user of the machine.

[0223] During portions of some transactions it may be unnecessary for the user to press any keys. In such situations some embodiments operate to disable the keypad keys and/or function keys. Because resources of the computer are used in polling such keys for inputs, the cessation of such polling during appropriate times enables the computer resources to be devoted to carrying out other functions. This will increase the speed at which other activities may be carried out. This may be accomplished in some embodiments by the keypad applet operating to remove the key devices from a poll list.

[0224] FIGS. **28-30** include schematic depictions of examples of the operation of the keyboard mapper and the keypad applet. **FIG. 27** shows an example of an input to the keypad **168**. In this example the keypad applet **170** generally in response to instructions in an HTTP record such as an HTML document or other events, transmits and enables events to the transaction services application **146**. In response a mapset is selected from the database **176** corresponding to the particular map name. The keyboard command server is further operative to enable the appropriate keys of the ATM.

[0225] In this example, in response the customer pressing the "OK" key on the keypad the CDI generates an appropriate signal to the transaction services application. As will be noted from **FIG. 27 a**"OK" key is referred to by convention as the "J" key of the ATM interface. The transaction services application transmits the signal generated from the pressing of the "J" key by the customer to the keyboard mapper **174**. In response to receiving the signal, the keyboard mapper operates to resolve the object in the mapset corresponding to the map name which will convert the function key input signal to a keyboard input signal which is recognized by the operating system. By calling the selected object from the mapset, a keyboard input signal is produced and delivered into the keyboard stream of the computer. This is represented by keyboard stream **178**. In the embodiment shown the keyboard stream is an input to the

Early Warning
IPR2024-01221
Ex. 1008-79

Windows NT® operating system. The keypad applet **170** operates to sense the input through its corresponding key listener. Applet **170** is also operative to receive the event and may operate to display an icon or other graphic corresponding to what the customer has input.

[**0226**] **FIG. 28** shows operation of the keyboard mapper in situations where the transaction services application operates to prevent transmitting the data input by the customer to the applet **170**. This may be desirable for example, in situations where the input by the customer is the customer's PIN or other data which is not to be displayed. In these circumstances the transaction services application **146** operates to hold the data input by the customer and to send only a signal representative of a holding character, in this case a "*" symbol back to the browser. This is done selectively in response to the instructions contained in documents accessed by the browser or in other HTTP records accessed by the computer which indicates that the input by the customer corresponds to their PIN or other data which is not to be sent to the browser. In the example shown in **FIG. 28** only the holding character is passed through the keyboard mapper to the browser. In situations where the HTTP record accessed invokes methods in which numerical values are to be sent to the browser and/or displayed on the screen (such as the amount of a withdrawal transaction) the signal sent by the transaction services application to the browser is indicative of the numerical value associated with the key pressed.

[**0227**] **FIG. 30** is a further example of the operation of the keyboard mapper in this case the input corresponds to a function key **166**. In this case the input is caused by pressing the function key "A" which is shown adjacent to the upper right hand corner of the screen as shown in **FIG. 27**. The signal generated in response to pressing the function key is passed to the keyboard mapper which in response to the data obtained from the data store **176** outputs a mouse input corresponding to a mouse click. The mouse input includes data representative of the x and y coordinates on the screen where the mouse click is to be provided. This mouse input signal is passed to the mouse stream input schematically represented **180**.

[**0228**] As will be appreciated, to enable the automated banking machine which processes documents to operate using a conventional ATM interface the mouse input will generally include coordinate locations which correspond to a location on the screen adjacent to the particular function key. This is because the icon, line, text or other indicia which the customer is selecting by pressing the key will preferably appear or extend on the screen adjacent to the key. In this way the customer is aware through the visual presentation what key to press to make a corresponding selection. A number of function keys adjacent to the screen may be operative at any one time. The customer may make selections by pressing a function key at one location and then a function key at another location disposed from the first location. This will result in signals being sent to the mouse stream corresponding to mouse clicks at coordinates on the screen adjacent to the function buttons pressed by the customer. During transactions various combinations of function and keypad keys may be operative and mapped to various keyboard and mouse inputs as determined by the selected mapsets. In addition developers may develop special mapsets corresponding to the particular graphics in documents which are displayed.

[**0229**] In the foregoing manner keypad inputs to a conventional ATM or other automated banking machine keypad can be translated into conventional keyboard or mouse inputs which can be identified and processed in a conventional keyboard input stream or mouse input stream to a computer. Likewise function keys may be translated into mouse inputs at selected locations and delivered into the mouse input stream for processing by the computer or may be converted into keyboard inputs and delivered to the keyboard input stream. A further advantage of the described terminal configuration is that keys may be selectively disabled except when they are needed. This may reduce instances of attempts to improperly access the machine by pressing keys on the keyboard. Further as previously discussed steps may also be taken to disable keys when they are not needed to increase transaction processing speeds.

[**0230**] A further advantage of some embodiments is the ability of the automated banking machine to provide printed documents based on instructions in HTML or other types of documents. Such printed items may include tickets, travelers checks, money orders, bank checks, scrip or other types of documents. The ability of embodiments to access and process documents enables the printing of graphics and other indicia which can produce printed documents having selected appearance features and selected ornamental designs. This can reduce the need to utilize preprinted forms and also enables the printing of a greater variety of printed formats. Further the configuration of some embodiments of the machine enable printing only selected portions of transaction information for record keeping purposes within the machine while providing versions including enhanced graphics or other attractive features to customers.

[**0231**] **FIG. 31** is a schematic representation of the operation of the system in printing forms using a printer in an automated transaction machine. The exemplary form of the invention uses the WIN32 printer services which operate under Windows NT® 4.0. In the exemplary transaction shown, the director manager class **180** operating in the terminal theater portion **138** initiates a print receipt transaction by requesting a printer director **182** to print a receipt. The printer director in the exemplary embodiment is a collection of instances of related JAVA beans which operate to carry out printing activities, and is one of the directors among the terminal directors **144**. The printer director includes a print class which is schematically shown separately which is operative to invoke a print URL method. The printer class in the exemplary embodiment includes access to the shared transaction data object which includes the customer specific information concerning the transaction that includes indicia representative of information to be printed. In the case of an automated banking machine this may include for example indicia representative information which is read from a customer's card input to the machine and read by a card reader. This would include for example the customer's name and account number. The other transaction information may include the types of transactions conducted such as a deposit, withdrawal or inquiry as well as the amount involved in each respective transaction.

[**0232**] The transaction services application **146** receives the print request and passes the URL string to the WIN printer object **184** by the print URL method. The URL address in an exemplary embodiment is the address of an HTTP record such as an HTML document that will be used

Early Warning
IPR2024-01221
Ex. 1008-80

to format the document to be printed, in this case a receipt. This HTML document contains the embedded JAVA script that processes transaction data from the transaction data object. The URL address of the document may be on a local machine or may be retrieved from another server such as through a network schematically indicated **186**. Network **186** may be a local area network or a wide area network depending on the configuration of the machine.

[**0233**] The WIN printer object **184** next navigates to the address of the document to be accessed. This is done in one embodiment using Microsoft's C Web Browser2 ActiveX control. When the HTML document has been loaded the ActiveX control automatically begins processing the content of the accessed document. The transaction services application **146** invokes the print URL method of the WIN printer object **184**. The WIN printer object uses the ActiveX control to print the current HTML document. This printing is processed by the Windows NT® print spool and graphics components.

[**0234**] The JAVA CDI receives an event from the print monitor component **192** that indicates the completion of print spooling. This indicates that a file is now available to be read and sent to the common device interface (CDI) **188** of the receipt printer.

[**0235**] Next a printer object **190** invokes a read data function in the print monitor **192** to determine the location and size of the print data file. The print object **190** sends the data or the path name of the data file to the printer CDI **188**. The printer CDI **188** then passes the print data to the printer hardware. This results in printing of the receipt.

[**0236**] Once the receipt is printed the app let from the printer di rector **182** issues a request to deliver the printed receipt. The delivery request is passed through the transaction services application **146** to the printer object **190**. The printer object **190** invokes the delivery method on the printer CDI **188** to cause the receipt to be delivered to the user of the machine. The operation of the software components enables selectively accessing document formats as well as using instructions contained in the documents to include transaction data within the printed documents. This enables producing documents of varied types. In addition it enables providing printing different types of documents for different customers. This may be desirable when providing marketing information, coupons or similar indicia on transaction receipts. This approach further simplifies providing printed formats in various languages by developing HTML documents which provide printed forms in different languages. As can be appreciated numerous types of form documents may be established which include instructions which instantiate and/or process certain data in the transaction data object to produce printed forms. In addition similar methods may be used for providing marketing to customers by profile or types of customer categories, as well as on a segment of one basis.

[**0237**] While the printing method previously described is discussed in connection with delivering transaction receipts, similar methods may be invoked for the printing of statements for customers as well as for printing a transaction journal within the automated banking machine. Further by accessing selected documents controlling the format of printing the information, journal records may be provided with consolidated information in a manner which enables conserving journal paper within the machine by not printing promotional or other types of information that is provided on customer documents.

[**0238**] The printing method of the exemplary embodiment also enables printing various types of optical indicia such as bar code or other types of machine readable indicia which can be used for printing coupons, checks or similar articles. Such coding may facilitate tracking the use of such items by customers for purposes of evaluating the effectiveness of various marketing efforts. In addition machine readable indicia may be used for printing on items such as deposit envelopes and/or in transaction journals. Such printing may facilitate reading such items by machine to verify the contents of deposits.

[**0239**] The printing capabilities achieved through the methods described also enables the printing of selected graphical materials. This may include for example materials which include embedded digital signatures which can be used to verify the genuineness of the items printed. This may be particularly useful for example in situations where the transaction machine is used to print scrip, travelers checks, betting slips or other items having independent value. In addition printed documents in full color may be produced by including a color printer in the transaction machine.

[**0240**] The principles associated with printing forms from the automated banking machine are also applicable to the development of other electronic and hard copy forms. As previously discussed, in some embodiments the transaction data may be delivered to the home bank as an HTML document or other HTTP message. Such documents may include instructions which when processed by a browser, operate to extract or manipulate the data therein so it may be further processed and/or stored in a different format. Such processing may include for example, the conversion of the data in the document to a non-HTTP format such as a Diebold 91X, NCR PAS or IBM 473X format.

[**0241**] In some circumstances customers at the automated banking machine may be presented with promotional offers or offers to purchase goods or services. These offers may come from vendor entities not associated with the institution with which the customer has their account. Such offers to be accepted may require the customer to provide information to the vendor. Such information may commonly include data accumulated in the transaction record or transaction data object. For example, the vendor of the goods or services will often need the customer name and account number data for charging for the goods or services. As previously discussed, the transaction data object may also hold personal data about the customer that is stored on the customer's card or other article and read by a reader in the machine. In exemplary embodiments, the vendors of such goods or services may have applications accessible on a server. These applications may include documents which have instructions therein for instantiating and/or processing the information in the transaction data object to provide the information the vendor needs to consummate the transaction. This may be accomplished by navigating one of the visible or non-visible browsers in the banking machine to the network address at which the vendor document(s) are accessible in response to input of instructions by the customer that they wish to accept an offer or conduct such a transaction.

[**0242**] In exemplary embodiments, a vendor form may be viewed on the display and printed by the customer at the

Early Warning
IPR2024-01221
Ex. 1008-81

automated banking machine. If there is a need for further information from the customer or for the customer to make selections, the vendor application comprised of HTML, other type mark up language or other documents may elicit such information through the customer interface of the banking machine. The vendor application may also have the customer acknowledge limitations of disclaimers related to the goods or services being offered. The printing capabilities of the exemplary embodiment further enables providing a customer with a printed version of a computer generated form or contract reflecting information concerning the transaction and terms associated therewith. Further any special provisions such as a printed notice that the customer has a right to rescind the transaction for a period of time and the steps the customer must take to rescind may be provided in printed hard copy format.

[0243] In alternative embodiments the offers or transactions provided through the automated banking machine by vendors of goods or services may utilize the same or at least some of the documents comprising an application which is used to conduct transactions electronically when the customer is not operating an automated banking machine. For example, similar form type documents may have data therein populated through a user's home computer when the transaction is conducted away from an automated banking machine. When the transaction is conducted at a banking machine the information in the transaction data object or other transaction record is used to provide the necessary data.

[0244] This capability provides opportunities for vendors to develop applications that can be used over the Internet for home PCs as well as for customers who use automated banking machines. Such capabilities further enable vendors and banking institutions to develop applications such as home banking applications, applications for making purchases and bill payment applications that can be utilized from both home PCs and automated banking machines. Because automated banking machines have access to data which is stored in a bank office, database personal data stored on a card or accessible from another data store, exemplary systems may be configured so that additional information may be included in the transaction data object without the need for input by a customer at the banking machine. This enables processing transactions at the banking machine more quickly than may be possible on the customer's home PC. Further utilizing the banking machine for conducting transactions enables the customer to conduct the transactions utilizing the security associated with the banking machine system.

[0245] The use of automated banking machines to conduct transactions that could be carried out through a home PC has an advantage in that it includes the capability of providing the customer with hard copy receipt forms documenting transactions conducted. The use of the banking machine may also provide customers with greater confidence that transactions have been recorded as the bank may also maintain information which documents the transaction even through the transaction is between the customer and a third party. Banking machines may also provide receipt forms that are deliberately made more difficult to counterfeit or which have capabilities of being verified as genuine. The use of image recording systems in connection with banking machines also may be used to verify that a transaction was conducted by an authorized person. Such features also enable the institution having the customer's account to offer promotions such as premiums, extended warranties or prizes for conducting transactions with the involvement of the institution. Numerous advantages within the scope of the concepts disclosed may also be achieved.

[0246] Alternatively or in addition, customer confidence may also be maintained by the customer receiving electronic evidence of the transaction.

[0247] The automated banking machine, such as an ATM, may be operative to initiate the sending of a non paper transaction receipt to the customer. The receipt can reflect a transaction performed at the automated banking machine, such as the dispensing of cash, deposits, the transfer of funds between accounts, and the payment of bills. The receipt may be sent using a wide area network, such as the Internet. The receipt may be an electronic receipt, for example a receipt in the form of an e-mail message sent to one or more e-mail addresses. The electronic receipt may also be a text message sent to a phone number of a mobile phone, pager, PDA, or other portable computing device. The receipt may be an audio receipt in the form of voice data (analog or digital). The receipt may be generated and/or sent from the ATM itself or from another computer associated with the ATM, such as a bank host computer. The receipt may include graphic information such as an image of a check or other instrument or item. The customer can receive (or convert) the electronic receipt in a format that permits a hard copy to be printed.

[0248] The customer may have various options regarding where to receive the receipt and the content of the receipt. The customer may choose the desired options when initially setting up an account, such as a bank account. For example, the e-mail address, mobile phone number, or other system or electronic address may already be known by the bank from the customer's bank account. Thus, an electronic receipt can be sent to the e-mail address, mobile phone number, or other system address which is associated with the customer's account. The customer may also be able to change the options, such as the e-mail address or mobile phone number, through use of the ATM such as by providing inputs thereto through the input devices thereon. Alternatively, the desired options may be originally selected at the ATM with initial use thereof.

[0249] By providing an e-mail address, mobile phone number, or other system address, the customer may choose to receive the receipt at a computer, such as their home computer (e.g., pc), work computer, mobile phone, pager, PDA, other hand-held or portable computing device, or another device capable of receiving a message. The customer may also choose to receive the receipt as a voice message on their voice mail or a phone answering machine.

[0250] The customer may also have the option of determining the level of information in the receipt. Some customers may desire basic information without any personal information. That is, a customer may be concerned about private or confidential information. A customer concerned about the security of e-mailed transaction information may elect to receive a simple email without any worry if the e-mail should be intercepted or sent to a wrong address. For example, their electronic receipt may be an e-mail stating that "This is a reminder that you withdrew $100". Other

customers may desire much more detailed information in which their receipt includes the transaction date, the type of transaction, the amounts involved in the transaction, the financial institutions involved, the account numbers, and the account balances. Of course other customer receipts may contain more or less information content. Furthermore, security and/or verification technology, e.g., encryption technology, digital certificates, secure socket connections, etc. may be used to ensure secure receipts.

[0251] The customer may also have the option of sending additional receipt copies to additional selected systems and system addresses. For example, a receipt may be sent to an associate or a party to a business transaction as an indication that a deposit or payment on a loan was made. A receipt may also show that payment was made to a particular account, such as the account of a utility company. A co-signer of an account, such as a parent, may also receive their own electronic receipt. Additionally, the electronic receipts corresponding to the same transaction may not be identical in information content. For example, a parent's receipt may include more (or a different type of) information (e.g., withdrawal amount, date/time of cash withdrawal, location of withdrawal, etc.) than the receipt their child receives.

[0252] The electronic receipt may include security coded information. Software, which may be installed on a customer's pc, may be required to decipher the coding to permit reading of the receipt.

[0253] Other receipts may be formatted so that the transaction indicated thereon can be easily read or even downloaded into a financial program, such as Quicken or Microsoft Money. Still other receipts may be formatted in a manner compatible with a financial program such that when the financial program is opened by the customer the customer is prompted as to whether receipts should be searched for and automatically downloaded. Still other receipts may include instructions which initiate the running of a financial program (such as Quicken) which automatically enters the receipt transaction into the account records. For example, a cash withdrawal electronic receipt may contain instructions embedded therein enabling the opening of the customer's Quicken program and automatically inserting the transaction information in the correct ledger of the customer's check book account.

[0254] The ATM system may also be able to send the customer an account statement, such as a mini statement. The statement may be sent in a manner similar to a receipt. The statement may also be compatible with a financial program for automatic downloading of the statement information for correcting and/or updating the customer's financial program information.

[0255] A receipt may include video or image data content (such as a video file, film, picture frames, digital images, or other digital content) of a transaction. The video content (still or moving images) may be provided by one or more cameras outside and/or inside the ATM. For example, the receipt may include video content of a customer receiving a cash withdrawal or making a deposit. The video content may also include the date and time of a deposit. The time may include the hour, the minutes, and the seconds covering the entire time period in which a transaction was carried out. The starting and ending times of the transaction may be determined by the ATM owner. For example, for a deposit the starting time may be when the ATM determines a customer request for deposit, and the ending time may be when a secured deposit is sensed as received by the machine. Another example of a deposit accepting device is described in U.S. Pat. No. 6,230,928 the disclosure of which is incorporated herein by reference.

[0256] For a cash withdrawal, the information in the receipt may be used as evidence by the customer if the entire requested amount of withdrawal was not presented to the customer. The customer can later use the evidence, or notify the bank to review their copy of the video, in order to receive the missing amount. The customer may have the option of requesting the video receipt after receiving the cash withdrawal. If the customer is pleased with the cash withdrawal then the customer may deny choosing to receive a receipt. However, if the customer did not receive the requested amount of cash, e.g., because of a machine malfunction, then a receipt may be desired and requested. The video may also be used by the ATM owner to assist in determining the cause of the malfunction. Of course a copy of the video receipt can be electronically sent to an ATM technician facility for machine assessment.

[0257] Furthermore, cameras associated with an automated banking machine may be used to provide images for self diagnostic operations. For example, images may be generated at a set frequency (or randomly) for comparison with previously created standard images. A computer system can compare images to check for several factors, such as machine part wear (e.g., using an inside image) or a security breach (e.g., using an outside image). Of course additional cameras may be used which are not attached to the automated banking machine, especially cameras that can provide an exterior view of the outer surfaces of the machine. The cameras may also have a programmable control to provide different magnifications and camera movement.

[0258] For a deposit, the receipt may include image (e.g., video) content showing evidence that a deposit transaction was actually carried out. The electronic receipt may be associated with an ATM depository or with some other type of deposit accepting machine, such as a stand-alone depository. As previously discussed, the depository may have one or more cameras outside and/or inside the machine for providing receipt material content. A depositor customer may have receipt options similar to the previously discussed receipt options. Since the video receipt provides the depositor a record of what has been deposited, disputes as to whether the deposit actually occurred can be quickly settled or avoided.

[0259] A receipt may also provide proof of payment of a bill at an automated banking machine. The machine may permit payment by cash, check, credit card, debit card, smart card, balance transfer, etc. The bill may be a bank loan, a credit card bill, a utility bill, merchant invoice, or some other type of bill involving due payment. For example, a customer may be able to deposit cash into the automated banking machine with instructions (either text or electronic) as to bill payment, e.g., which bill is being paid, amount of payment, etc. The customer's received digital (e.g., image file) receipt would show evidence that the bill was timely paid.

[0260] It should be understood that an automated banking machine as discussed herein may comprise a self service machine. For example, the self service machine may be a

part of checkout system at a merchant facility, such as a grocery store. That is, a customer can use an automated banking machine to perform a self checkout of a grocery purchase. The self service machine may permit the transaction functions discussed herein, including cash withdrawal, deposits, and bill payment. The self service machine may also have access to the information relating to the grocery items available for purchase, such as their identification and prices, in order to permit a customer to perform a self checkout.

[0261] Furthermore, an automated banking machine may have a check acceptor device capable of receiving and reading a check. A check, like currency, can be accepted by the machine for a variety of transactions as discussed herein, such as a deposit or as bill payment. A check, in order to be accepted by a machine for bill payment involving another bank, may require machine readable indicia thereon pertaining to the particular payor, payee and/or amount. For example, a check may have printed thereon the account information of the payor or maker of the check. This information may be printed in the form of micr or other indicia which can be read by the banking machine and used to communicate the account information along with the check amount and/or other information to the payor's bank or a clearing house. Alternatively or in addition, a payee such as a utility company, may have indicia such as a number on the check which the machine can recognize for use in processing the check. The number may include information corresponding to the payee's bank that enables the host bank to locate and communicate with the payee's bank to confirm information. Thus, the host bank can send necessary information to the payee's bank or a clearing house to complete the transaction. Examples of a check imaging device and its operation is described in U.S. Pat. Nos. 5,540,425 and 6,474,548 the disclosures of which are incorporated herein by reference.

[0262] An image of a received check can be generated by the automated banking machine. Other information, such as the payor, payee, amount indicia, receiving bank's identifier or other indicia, may be included in the image. The image may include the previously discussed video or image data content formats. Other devices for providing check images may also be used, such as a scanner. The check image can be sent, e.g., by electronic message such as e-mail to the owner of the checking account from which the funds are drawn.

[0263] Checks may have indicia corresponding to the e-mail address printed, mobile phone number, or other system address encoded thereon. Alternatively a person making or cashing the check may print or write an e-mail address or other system address on the check (for example on the front side for the maker and on the backside for the payee). The automated banking machine can read an e-mail address, mobile phone number, or other system address located on a check. Alternatively or in addition, the e-mail address, mobile phone number, or other system address may be stored in a data store in correlated relation with the indicia corresponding with the payor information on the check, such as with the maker's checking account. Thus, an e-mail address, mobile phone number, or other system address may be obtained by a bank, clearing house (or other party) by associating check information (e.g., account number on the check) with the e-mail address, mobile phone number, or other system address associated with that customer's checking account.

[0264] The automated banking machine may be programmed to display the system address information for sending the information to the customer prior to initiating sending of the receipt. The machine may then prompt the customer to provide one or more inputs through input devices on the machine to confirm whether the displayed address is the correct address to which the electronic receipt should be sent. Again, the customer may have the option of correcting and/or updating the address information at the machine by providing inputs through input devices on the machine. The host connected to the ATM can then store the new address information for future use by associating it with that customer's transaction account, e.g., checking account or with other customer information. Alternatively or in addition the ATM may read the notification data on the check associated with the maker (or an endorser) and operate to provide such entity a receipt and/or a copy of the check.

[0265] Alternatively or in addition, a bank host may automatically compare indicia corresponding to an address for sending an electronic receipt or other message read from a check with a database to determine if the address has been updated. If the address has been updated, then the bank's customer records can be updated to reflect the new e-mail address, mobile phone number, or other system address and the check image or other message is sent to the updated system address. The database may be public or proprietary. For example, a database may show the customer having a newly listed Internet e-mail address. The comparison with a database may involve the use of an Internet search engine. Again, the customer may be requested to input or provide one or more inputs to confirm the correct e-mail address, especially if there are inconsistencies in the search results.

[0266] In other embodiments the customer may be requested to confirm the correct system address after a predetermined period of time. For example, to provide enhanced security, after each six-month period a customer may be prompted at the automated banking machine to confirm the correct e-mail address, mobile phone number or other system address by providing at least one input. Of course, other factors may require a customer to confirm a correct an system address. For example, system address confirmation may be needed if the check is old or suspicious.

[0267] The e-mail address, mobile phone number, or other system address of record so as to indicate that it is associated with a customer's checking account may also be used by the bank to help determine whether to accept or reject a check at the machine. That is, a system address may be a factor considered in deciding whether to accept a check for deposit. For example, a third party check may not be accepted for deposit in a customer's account if the owner of the checking account from which the funds will be drawn does not have an associated e-mail address to which to send the image of the check, or if the e-mail address is not in conformance with certain criteria.

[0268] In exemplary embodiments at least one digital image of a check received for deposit is generated at the automated banking machine. As previously discussed, a check scanner or other imaging device may be used to capture the image. The check image may be forwarded or

Early Warning
IPR2024-01221
Ex. 1008-84

otherwise made accessible to a remote computer, such as the host bank. A data store in operative connection with the remote computer may store a copy of the imaged check or selected portion(s) thereof, and possibly other information associated therewith. The other information may include information enabling a bank to have proper record keeping and retrieval of the check image, such as the checking account, check number, payor, payee, date, time, amount, etc. The remote computer may be used to produce copies of the check image either electronic or hard copy as may be requested. The remote computer or other computer connected to the data store can be used to e-mail an image of the check to the e-mail address associated with the account listed on the check as associated with the payor. Alternatively the remote computer may resolve an address associated with the maker or payor and/or other entity who is to receive an image corresponding to the check, and may operate to cause the controller in the machine to forward the image or to make the image data stored at the machine accessible to such system address. Image data corresponding to the check can be electronically sent or made accessible to financial institutions, clearing houses or other entities which may require knowledge of the information associated with the check and/or one or more images thereof. For example the check image may be electronically sent to the bank on which the funds are withdrawn, the Federal Reserve, other government agencies, outsourcing facilities, and/or other organizations. The check image may also be sent or made accessible to law enforcement agencies. Of course the host can also print a hard paper copy of the check and mail the paper copy to a financial institution or to the customer.

[0269] Alternatively or in addition, instead of having the individual images of checks e-mailed as individual receipts to the check user, a user can view or download check images corresponding to that user's checking account online from a system address such as the bank's web site. A user may have different options for viewing the checks at the bank's web site, for example individually or as a batch. The combination of checks may be viewable as a batch in an order corresponding to check number, clearing date, date of acceptance, amount, etc. The checks and/or corresponding data, whether presented individually or in a batch, may be downloaded into a user's computer. This may be done in some embodiments in a format that permits their information to be directly loaded into a finance program, such as a checking account in Quicken. Alternatively or in addition, downloaded checks or certain data thereon or instructions associated therewith, may be converted by a software program into a compatible format permitting their usage with a finance program.

[0270] Furthermore, a customer, instead of receiving many individual e-mail receipts, may choose to receive an e-mail containing a single batch of deposited checks over a predetermined time period, such as every month. Alternatively or in addition the maker and/or payee may be advised that check images are posted on a site for viewing, and such entities may or may not choose to download image data. For example a maker or payee may be satisfied with receiving summary data such as check number and amount (or other data) in lieu of the entire image. In some embodiments a maker and/or payee may access electronic statements that reference checks that each has issued or deposited. The statement data may each include links to the system and/or data storage address that contains the image data. In this way multiple entities who may wish to have image data do not need to access different data. Further, image data such as images from the ATM security camera showing the person presenting the check may be stored in associated relation with the image data and other data related to the transaction. Of course these approaches are exemplary.

[0271] Other embodiments may include a bank or other entity keeping a virtual checking account on behalf of a customer. The images of a customer's checks would be electronically stored by the bank on behalf of the customer. Thus, a customer would be able to view their checking account information online in real time or near real time. Furthermore, a customer's checking account information, including the images of checks, could be sent to a desired address at any time as authorized by a customer. Thus, the customer could have a virtual bank.

[0272] As previously discussed, a check image may include other information. For example, the image of a check may also include an authorization indicia or code. The authorizing indicia would be evidence that the check was accepted for deposit by the machine or bank. The machine which accepts the checks may physically mark or imprint the authorizing indicia directly on the check. Alternatively, the authorizing indicia may only be electronically presented in a generated image of the check. For example, the authorizing indicia may be electronically produced and included with the check image. The check image may be shown appearing to have the generated authorizing indicia stamped thereon, or it may be shown with the generated authorizing indicia located outside of the check border area. Still, other data may be included with a check image. For example, the other data may include the date, time, amount read, and/or machine location that the check was presented or accepted by a machine. Thus, the check image may include the check area defined by the paper check border and an additional area outside of the check area. Of course the check image may be stored in a predetermined viewing size and format at the discretion of the bank. Links may be included in the image data. For example a link may be provided to ATM security camera footage by clicking on the endorser's signature. The images may further be made to include by the banking machine or other connected computers to include digital watermarks of visible and/or nonvisible types that may be used to verify genuineness of the image.

[0273] Alternative embodiments may include using the captured images, which contain images of customers, for comparison with individuals wanted by law enforcement agencies. The automated banking machine or host system may include software operable to segregate facial images from the captured images and place them into a separate facial image file. Of course, imaging software may be used to originally capture facial images or image features for placement into a facial image file. The comparison and analysis of facial images may be conducted at the machine. Alternatively, the facial image files may be electronically sent to the law enforcement agencies for analysis. Of course other body images, including full body images, may be captured by the machine for use. The automated banking machine of some embodiments may further be able to quickly notify law enforcement that a wanted individual is currently using the machine.

[0274] In some embodiments the ATM or connected systems may be operative to capture facial image data, finger-

print data or other biometric data associated with a user of the ATM and may use such data for other purposes. For example, the identifies of persons cashing checks may be compared and analyzed to assure that such persons are within the country legally. Alternatively or in addition, identity data may be used for purposes of verifying that the person depositing the check has a valid work permit. This may be useful for example, in situations where temporary workers are employed and are issued paychecks, vouchers or scrip that can be exchanged for cash at the ATM.

[0275] Alternatively or in addition checks as well as other documents such as currency bills that are accepted at an ATM may be correlated with image or other biometric data associated with a person depositing such items. This may enable documents that are determined to be counterfeit, fraudulent or suspect by analysis at the ATM or through a related system, to be traced back to the particular individual who deposited the document. This may be done based on check numbers or bill serial numbers in some embodiments. In other embodiments other approaches for identifying individuals and correlating individuals and deposited items may be used.

[0276] Other embodiments may include using software in a local or host computer that recognizes when a customer is nearing the end of their available batch of checks. For example, the bank host may be programmed such that when a customer's check number of a particular value read by the automated banking machine or is otherwise processed for payment, that event is correlated with the need for more checks. Thus, a customer may be notified of the situation during a subsequent transaction session at the ATM and then asked if the user wishes to place a new check order at the machine. Payment for the new checks could be assessed to the customer's account responsive to customer inputs and operation of the processor in the ATM. The customer could then receive the new check order by regular mail or other delivery method responsive to messages sent from the ATM.

[0277] In some embodiments a computer of the ATM which may be alternatively referred to as a controller, may be operative to enable the user of the machine to select indicia that appear on the checks as well as other aspects of the checks such as style features. These may include for example color and design. In some embodiments the ATM responsive to the user providing an input indicative of a check order may communicate with one or more remote computers to obtain record data concerning the current address that is associated with the user or their account which corresponds to the data on the card used to conduct the transaction. The controller in the ATM may be operative to output this address through an output device such as the screen on the ATM along with text prompting the user to provide at least one input to an input device to indicate whether the address output is correct. If the user provides an input indicating that the address is not correct the user may be provided with outputs requesting that the user provide inputs corresponding to an address to be printed on the checks. The user may then provide inputs to the ATM to indicate the new address which is displayed by the machine and the user may be asked to provide at least one confirming input through at least one input device.

[0278] In some embodiments the user may be asked to provide additional inputs to the banking machine before a change of address will be accepted. Such additional identifying inputs may help to assure the user's identity. The ATM may provide an output requesting one or more inputs corresponding to information previously known to be associated with the user who is indicated as operating the machine. Such inputs may include the maiden name of the user's mother or the last several digits of the user's social security number. Alternatively or in addition, the user may provide a biometric input. Such inputs may be communicated through operation of the computer in the ATM to a remote computer in operative connection with one or more data stores containing such information. A comparison of input data to stored data may then be made. A failure to achieve a valid comparison may suggest that the user at the machine is not who they are indicated to be and the banking machine and/or connected computers may operate to prevent the user from changing their address data and/or from ordering checks. Other steps may be taken as well in some embodiments, such as invalidating or capturing the user's card at the ATM, putting a hold on the user's account, attempting to contact the user through other contact methods such as by phone, or other steps.

[0279] In some embodiments the user requesting to order checks at the banking machine may be provided with the opportunity to select style features of the checks being ordered. This may include colors, patterns, pictures or other features of the checks. In some embodiments the machine may be operative to provide the user with outputs corresponding to various styles of checks. The user may provide inputs selecting style features and the computer in the banking machine may be operative to provide the user with outputs showing check style information responsive to such user inputs. The user may also be provided with graphical outputs corresponding to style information options as well as pricing options associated with style options. In some embodiments the user's personal information may be used and inserted in the graphical representations of the check formats so the user may preview the appearance of their checks with given style features. In response the user may provide one or more style inputs to the machine which are operative to select style features for the checks being ordered. The checks are then produced in accordance with the inputs provided by the user.

[0280] In some embodiments checks ordered at the machine may include security features produced responsive to inputs provided by the user at the machine. Such inputs may include for example, an image of a portion of the user. An image of the user's face captured through operation of a camera operatively connected to the ATM may be included on the checks. Such an image included on the checks may help to assure that the person presenting the checks is the proper maker. Alternatively or in addition, data or indicia corresponding to other user features may be included on the check. For example, indicia corresponding to a user's facial, hand or fingerprint topography may be included on the checks. Such indicia may be compared to indicia resolved for a person presenting the check to assure that the person presenting the check is the authorized maker of the check. Such identifying indicia may be capable of being validated in an off-line mode by using a sensing device to sense the feature of the person presenting the check to the data on the check. Alternatively or in addition the data may be stored in a remote database so as to be accessible at the location at

which a user presents a check. Of course these approaches are exemplary of many approaches that may be used.

[0281] In some embodiments the ATM may operate responsive to the computer therein to receive inputs from the user indicating a system address to which image and/or other data corresponding to checks received for payment are to be sent. For example, a remote computer associated with a bank at which the user has their account may have associated with the user or their account, one or more e-mail addresses. The bank may provide the user with images of cancelled checks by sending or making such images accessible at such e-mail address. The ATM may operate in conjunction with one or more remote computers to provide an output indicative of a remote system address for sending images of cancelled checks. The ATM may output prompts asking the user to indicate if the output e-mail address is correct, and if the user provides an input indicating the system address is not correct, or if there is no system address for the user, the user may be prompted to provide inputs corresponding to a new systems approach. Approaches may be implemented to assure that the system address is bona fide. Such approaches may include approaches of the type discussed in connection with assuring that the user is authorized to provide a change in the address to which checks are to be sent. Of course other approaches may be used.

[0282] In some embodiments indicia corresponding to the system address for the user may be included on the checks. For example a check may include the maker's e-mail address for sending images of cancelled checks either in a clear or encoded form on the check. This may enable an ATM or other device receiving such a check the ability to read or resolve the system address for sending an image of the check and/or other data regarding the check cashing transaction to a user. Alternatively or in addition, remote system address data for the user may be stored in correlated relation with account data that is printed on the checks, in one or more data stores. Thus for example, the indicia on the check used to charge the amount of the check against the user's account may correspond to system address data for sending image data to the maker of the check.

[0283] In addition or in the alternative, indicia on the check may also correspond to other systems addresses to which images of the check and/or other data concerning the check may be sent. For example, such indicia on the check may either directly or through association in one or more data stores, be representative of a system address for a bank holding the account upon which the check is drawn, a Federal Reserve Bank, a clearinghouse operation and/or other entities. In some embodiments the image data or other data may be delivered in a manner that enables such data to be used by other computer programs operated in computers which receive such data for purposes of accounting, settlement, analysis of possible illegal activity and/or verifying genuineness of the check. Of course these approaches are exemplary.

[0284] In some embodiments the programming of the ATM may enable a user to access image data associated with a check through a system address associated with a bank on which the check is drawn or other remote address. Some embodiments a user may be provided with access codes or other information that enables accessing such data. In some embodiments the user may be able to select an access code through inputs to the ATM. Alternatively or in addition the user's cancelled checks may be accessible through a particular web site provided for the user or their account. Further in some embodiments the personal web site may enable the user to access the check images at an ATM and/or through a home PC. The ability to access such check images at the ATM may further include transaction options for the user to print copies of cancelled checks at the ATM. This may provide for example the ability for a person who does not have access to a home PC to have access to check images and hard copies of cancelled checks. This may enable such persons to avoid costs associated with having cancelled checks or facsimiles thereof sent to them by mail, which may be assessed by banks in some instances. Further in some embodiments the ATM may be operative to offer the user the option to select delivery of cancelled checks and/or facsimiles thereof by means other than printing at the ATM. The ATM may be operative to enable a user to provide inputs to pay for such a service by assessing a charge against their account. Of course such approaches are exemplary.

[0285] Some ATMs of exemplary embodiments may be capable of providing a user with blank checks from the machine or from a printer or other device that is in or otherwise adjacent to the ATM. Such capabilities may be useful particularly where the user only wants a limited number of checks. The features discussed as associated with ordering remotely produced checks may be implemented with locally produced checks. In some embodiments an ATM may be provided with an internal or adjacent printer device suitable for producing checks or other types of financial instruments adjacent to the ATM. In some embodiments users may be provided financial incentives to obtain checks locally at the ATM and avoid printing and shipping costs. Alternatively or in addition ATM customers may be assessed greater charges for locally produced checks because of the associated convenience. Of course various approaches may be used.

[0286] Additionally, the automated banking machine may be capable of printing paper checks or money orders for immediate or later use by a customer. Thus, a customer needing more checks could receive a one or a plurality of new blank paper checks, beginning with the proper check number, at the machine. In some embodiments the ATM may include a suitable printer and paper stock to enable the user to receive one or more checks from the machine. Such an approach may enable a user to receive a limited number of checks until a quantity of checks is printed at a remote location and mailed to the customer. Alternatively, some users may require checks only occasionally, and may obtain checks as required at the machine. Such machine generated checks may have the advantage of being lower in cost than preprinted checks. Further such ATM generated checks may include system address data thereon, perhaps responsive to customer inputs at the ATM indicating a system address for sending an image of the cancelled check.

[0287] In addition in some embodiments a user may be able to establish a checking account through operation of the ATM. This may include for example, the user providing a check or cash for deposit to establish the account, and the ATM issuing to the user one or more checks that can be used to draw on the account. In addition, input and output devices on the ATM may be used by the individual to agree to account terms. In some embodiments a digitizing tablet on

the ATM may be used to receive data corresponding to the user's signature. Alternatively, an electronic representation of the user's signature may be produced by the user using a finger to produce a two-dimensional scan of their signature by movement of the finger across the face of a touch screen (with the controller producing lines on the screen showing the signature responsive to finger movement). Alternatively the user may choose or be assigned a numerical or alpha numeric code or a graphical symbol or combination thereof to use as their signature to use when endorsing the checks. Of course these approaches are exemplary of many that may be used.

[0288] Furthermore, the automated banking machine, such as an ATM, may be capable of producing checks or money orders for deposit by a customer. The customer may request the printing of one or more paper checks for current use at the machine. That is, the machine could print a paper check for the customer and then the customer could physically fill out all or portions of the printed check and deposit it into the machine. The machine would then image the deposited check. The machine may then analyze the check for check number, legal amount, courtesy amount and perhaps other data using character recognition software operating in the machine, such as character recognition software available from A2iA Corp. or Carreker Corp. for example. The computer in the banking machine may then operate to cause the check data, check image data and/or other information to be communicated to the check payor, drawee bank, payee, clearing house or other system addresses in accordance with the programming of the particular system.

[0289] Alternatively, a customer may request the machine to produce and deposit a check for the customer. The bank host could have the customer's digital signature on file, or the customer could physically or electronically sign the check at the machine. For example, the machine could print the paper check, accept the check into the depository section of the machine, and record images relating to the entire transaction. Thus, a check image is generated and stored. Payment for the check amount, and any other fee, could be deducted from the customer's account. The banking arrangement structure and operation permit a customer to pay bills by check, obtain cash for a check or perform other transactions without the customer requiring initial (or possibly any) possession of any paper checks.

[0290] Alternatively, instead of the machine actually printing a check for deposit on behalf of the customer, the machine may generate only an electronic image of a virtual check for deposit. A check image may still be generated and stored. That is, the banking machine generates, the customer electronically signs and then the machine stores a virtual check. Again, the check image may be electronically sent or made accessible to the bank on which the funds are withdrawn, the Federal Reserve, the payor customer, the payee and/or other entities. If necessary, the virtual check can be converted into a paper check at any or all of the organizations that require a paper copy of the check. Therefore, time and costs associated with the shipping and handling of paper checks may be reduced with the use of electronic checks.

[0291] In some embodiments an automated banking machine may generate a check, other instrument or item for the customer. The banking machine may receive the check, instrument or item, and then dispense cash to the customer in exchange for the check, instrument or item. Such a system may find particular applicability in situations where the customer has reached their daily limit on allowed cash withdrawals on a debit card account or daily cash advance limit on a credit card account. Because daily limits are generally much higher for purchases on such accounts than for cash withdrawals, the banking machine may be programmed to enable the customer to purchase a check, or other instrument or item at the banking machine.

[0292] The banking machine may be configured so that a customer may be presented with the option of issuing a check, or purchasing a check, item or instrument, if they request a transaction after they reach or after they request a transaction which would put them above their daily cash withdrawal limit for their account. In some embodiments a check or other instrument may be produced in either hard copy or virtual form by the machine. The customer may sign the instrument (physically if in hard copy, or electronically if virtual) and then deposit the instrument in the machine. In the case of a virtual instrument the user would provide one or more inputs meeting the legal requirements of an electronic signature, and would provide one or more inputs through input devices on the machine to indicate the deposit of the instrument. This may include for example, one or more inputs through keys, biometric inputs, touch screen inputs and combinations thereof. The banking machine would then accept or otherwise process the instrument and provide the user with the cash. The value of the instrument, plus transaction fee surcharges if any, would be charged against the user's account. In this way a user could avoid the inconvenience of low daily cash withdrawal limits. Of course the hard copy or virtual instrument could be delivered as part of a message to various entities at system addresses by e-mail or otherwise as previously described.

[0293] Alternatively or in addition, in some embodiments the ATM may issue/generate the check or other instrument or item, and the cash may be provided from another source. This other source may be another machine that accepts the instrument or item. For example the item may be a document, voucher or token which when presented to another machine causes that machine to dispense cash. Alternatively, the source for the cash may be a human cashier. The cashier may receive the tangible check or item, and/or receive data corresponding to the virtual instrument, and provide the user with cash. The user entitled to the cash may be correlated with the virtual check through various processes, such as data encoded on a card the user used to initiate the transaction, a biometric identifier read at the banking machine, on the user's card or otherwise, or other forms of identification. Various approaches may be used depending on the requirements of the particular system.

[0294] It should be recognized that exemplary forms of the automated banking machines discussed herein permits their use at merchant facilities. For example, an automated banking machine at a merchant facility may be used to capture images related to the financial transaction at that facility, including goods purchased and credit/debit card payments. An electronic receipt of the purchase could be sent to the purchaser at a corresponding system address in response to operation of the banking machine. For example, electronic receipts and/or images of checks may be provided where bill payments are made either through an ATM or other attended or self service facility. Such capabilities may also be pro-

Early Warning
IPR2024-01221
Ex. 1008-88

vided in situations where users purchase goods or services such as a self service check out station. Of course, these approaches are merely exemplary.

[0295] It should be recognized that exemplary forms the automated banking machines discussed herein may comprise retrofitting or modification of existing automated banking machines, such as ATMs. For example, an existing ATM and/or bank host computer could be modified to include the capability to submit an electronic receipt of transactions conducted at the ATM.

[0296] **FIG. 60** is a schematic view representative of a cash withdrawal transaction at an ATM which provides the user with a remote electronic receipt. The manner of communication between ATMs and a remote computer such as a bank host computer has been discussed and need not be discussed again in detail. In this example the customer has an account at the host bank. The host bank authorizes the ATM to dispense the cash to the customer. A record of the cash withdrawal transaction is generated and stored at or submitted to the host bank. A text-based e-mail receipt corresponding to the withdrawal is sent to the customer's e-mail address of record. For example, the electronic receipt may be an e-mail stating that "This is a reminder that you withdrew $100 from your checking account." Alternatively or in addition, if the customer requested a receipt which includes images, such as images of aspects related to the transaction such as images of the user, the card, the dispensed cash, etc. then the electronic receipt including such images or including links to such images is sent responsive to operation of the computer in the machine and/or other connected computers to the customer's e-mail address of record. The electronic receipt may include sound files or links to sound files such as a synthesized voice message. The electronic receipt may also include multiple related images and/or full motion video. The customer may receive the receipt through a wide area network, such as the Internet.

[0297] **FIG. 61** is a schematic view representative of a cash deposit at an automated banking machine and with e-mail transaction receipt. In this example the customer has an account at the host bank. The cash is received for deposit through operation of the ATM. The machine operation associated with receiving of the cash for deposit may include counting the cash, prompting the customer concerning input of the amount, prompting the customer concerning confirmation of the e-mail address, etc. Images of features or items involved in the deposit transaction is generated and submitted to the host bank. The host bank then e-mails a copy of the imaging receipt to the customer's e-mail address of record.

[0298] **FIG. 62** is a schematic view representative of a check deposit at an automated banking machine and with plural e-mails reflecting the transaction. In this example the check is drawn on an account at another bank by a different party. That is, in this example the payor does not have the checking account with the host bank. The ATM receives the check and operates to determine whether it is valid for acceptance. This may include reading the numerical or other indicia on the check and analyzing it through operation of a computer at the ATM or located remotely to determine which bank which has the checking account on which the check is drawn. The ATM controller can communicate with the host bank computer. The host bank may also communicate with the other bank or a clearing house to confirm that funds in the amount of the check are available in the payor's checking account and request a transfer thereof. The communication may be through a proprietary network, through the Internet or other network. The other bank confirms that funds have been transferred from the payor's account and credited or transferred to the host bank. The depositor's account is then credited the value amount of the check. An image of the check and/or other information is produced through operation of the ATM. Information regarding the check may be attached to or correlated with the check image and sent electronically to the ATM host bank or other computer. The host bank or other computer stores a record of the information and image and sends a copy thereof to the customer, the payor's bank, an appropriate clearing house and/or the Federal Reserve. If the check is determined not to be acceptable for deposit, then the check is returned to the customer. The check and/or other information may nonetheless be stored for various purposes. In addition the ATM may be operative to produce a receipt for the customer at the machine and to print an image on the receipt of the check or other image data related to the transaction.

[0299] FIGS. **63-64** schematically represent exemplary steps in an example of a cash withdrawal from an automated banking machine having e-mail transaction receipt capability. The steps may correspond to the cash withdrawal schematically represented in **FIG. 60**. The steps show the customer having several receipt options. The steps also show the capability to update the e-mail address of record. Of course it should be understood that more receipt options could be included as previously discussed, such as enabling the customer to select having plural e-mail receipts sent to plural system addresses, and permitting the customer to change e-mail options (such as e-mail content, links to images and other data or access) at the machine.

[0300] It should be understood that although in the exemplary embodiments the messages to entities at various system addresses are shown as being dispatched from a computer associated with a host bank, in other embodiments other approaches may be used. For example, messages may be dispatched directly from the banking machine, or from another connected computer such as a clearing house.

[0301] **FIG. 65** shows a schematic view of an exemplary system **900** for sending a text message **902** corresponding to electronic transaction receipt from an ATM **908** to a mobile phone **904**. Here the ATM **908** is operatively programmed to send and receive messages through a public network **906** such as the Internet. In the exemplary embodiment, the system **900** may include a fire wall such as a proxy server **910** which is operative to limit access to the ATM from the Internet. In an exemplary embodiment, the ATM **908** may include terminal control software which includes a text messaging interface component **912**. The text messaging interface component **912** is operative in a computer of the ATM to cause the ATM to generate and send a text message communication **920** through the Internet **906** to a text messaging server **914**. In one exemplary embodiment, the text message server **914** may correspond to a short message service (SMS) server which is operative to accept text messages delivered through the Internet, and send those messages using the SMS protocol to the appropriate mobile phone network **916**. The mobile phone network **916** is

Early Warning
IPR2024-01221
Ex. 1008-89

operative to send the text message **902** to a mobile phone **904** or other SMS compatible device.

[**0302**] In an exemplary embodiment, the text messaging interfacing component **912** may be operatively programmed to communicate with the text messaging server **914** using the required protocols and interface methods of the text messaging server **914**. For example the text messaging server may communicate using HTTP over TCP/IP, SOAP over HTTP over TCP/IP, or another protocol over TCP/IP. The exemplary text messaging interface component **912** of the ATM **908** may be operative to generate and send at least one communication **920** to the text messaging server **914** which includes the text message corresponding to the electronic transaction receipt and a mobile phone number to deliver the text message.

[**0303**] In the exemplary embodiment the text messaging server **914** may require authentication from the ATM **908** prior to enabling the communication of text messages received from the ATM. Thus, the text messaging interface component **912** may further be operative to include a UserID **922** and/or Password **924** for the text messaging server **914** in the at least one communication **920**. The UserID **922** and/or Password **924** may be stored on the ATM **908** in a local data store of configuration parameters **928** for use by the text messaging interface component **912**. The configuration parameters **928** may also specify the network address **926** of the text messaging server **914**.

[**0304**] In the exemplary embodiment, the menu screens displayed by an ATM through a display device of the ATM, may further prompt the user if they would like to send an electronic transaction receipt to an e-mail address or mobile phone number. **FIG. 66** includes an example of an ATM menu screen **930** that the ATM **908** may produce which includes indicia that prompts a user to select whether they wish to have a text message sent to a mobile phone. The user may provide an input representative of either "Yes" or "No" regarding the sending of a text message receipt to their mobile phone. If the user provides an input representative of "Yes," the ATM **908** may be operative to produce a further menu screen **932** as shown in **FIG. 67**. The further menu screen **932** may include indicia which prompts a user to enter their mobile phone number through a numeric keypad or other input device of the ATM. When the user has finished entering the mobile phone number, the user may provide a further input to the ATM such as pressing a keypad key or a function key corresponding to the user being finished with entering the mobile phone number.

[**0305**] Once the user has completed entering the mobile phone number, the ATM **908** is operative to form a text message which includes information representative of the transaction performed by the ATM. Such text may include for example, the information representative of the type of transaction performed at the ATM, the amount of value involved in the transaction, a date and time the transaction was performed, a location of the ATM, an account number, other information typically found on a printed receipt, and/or any other information regarding the transaction that would be useful to the user. The text message interface component **412** may then encapsulate the text message corresponding to the transaction receipt into the appropriate format or object for sending through the Internet to the text messaging server **914**.

[**0306**] In the described exemplary embodiment, an existing ATM without the described text messaging capabilities may be upgraded with new software to include text messaging capabilities without modifying existing host banking system software or the interaction between the ATM and host banking system. The new software for example may include the previously described text message interface component and the user interface software components which provide the menu screens **930**, **932** for prompting and receiving a user's mobile phone number.

[**0307**] In further exemplary embodiments, the ATM may further be in operative connection with a data store of user specific information which may include the e-mail address, mobile phone number or other system address for the user. For example as shown in **FIG. 68**, an exemplary embodiment of an ATM **940** may be operative to access an e-mail address, mobile phone number, or other system address of the user through communication with a data store **942**. The data store **942** may include the e-mail address, mobile phone number, or other system address of the user stored in a data store in association with the user's account number. The avoid having the user re-input an email address and/or a mobile phone number into the ATM each time a transaction is carried out, the ATM controller may operate to retrieve the user's e-mail address and/or phone number from the data store, and prompt the user to provide at least one input that is operative to cause the ATM to send the electronic transaction receipt to the e-mail address and/or phone number retrieved from the data store. The exemplary embodiment of the ATM **940** may enable a user then confirm that the retrieved e-mail address and/or mobile phone number is correct prior to sending the message, and may enable the user to input an alternative e-mail address and/or mobile phone number. The exemplary embodiment of the ATM, may also be operative update the data store with the alternative e-mail and/or mobile phone number.

[**0308**] In an exemplary embodiment, the data store **942** may be accessible from a server connected to the Internet through a secure and/or encrypted communication session. In a further exemplary embodiment, the e-mail address and/or mobile phone number may accessible from the data store **942** through communication with a host banking system through the use of ATM transaction messages. In the described exemplary embodiment, each ATM may directly generate and send an electronic transaction receipt to a text messaging server **944** or the an e-mail server **946**. However, in alternative exemplary embodiments, a further server **948** and/or host banking system in communication with the ATMs may be operative to generate and send the electronic transaction receipts to the text messaging server **944** or e-mail server **946** responsive to the transaction performed at the ATM.

[**0309**] Terminal directors as discussed previously include software components that are comprised of a collection of objects such as Java applets or Java beans. Java beans are Java classes that adhere to the Java beans specification. These objects are operative to sequence ATM transactions. In the exemplary embodiment there is typically one terminal director per transaction. For example two common terminal directors are the withdrawal director and the deposit director which are operative to control the functionality of an ATM for withdrawing and depositing respectfully. Other terminal directors are responsible for other types of transactions such

Early Warning
IPR2024-01221
Ex. 1008-90

as a transferring value between accounts, and performing an inquiry of an available balance for an account.

[0310] An exemplary embodiment includes methods for creating terminal directors in a visual programming environment by linking a plurality of visual icons that are representative of instances of related Java beans. Although the exemplary embodiment uses Java beans, the present invention encompasses any type of object or class that is operative to group related programming logic, events, properties, and methods. Other examples include C++ classes, CORBA objects, Active X objects, and COMM objects. Previous examples of these objects include the backstage applet **156** and the keypad applet **170**.

[0311] Embodiments may include a plurality of these specialized applets, classes, or objects which are designed to encapsulate specific functionality for automated transaction machines such as ATMs, and other types of self service terminals. These objects are referred to hereafter as ATM objects and are designed to be the basic building blocks for creating terminal directors. For example some ATM objects are operative to control the various devices of an ATM, such as a card reader, a presenter, a dispenser, a printer, and a keypad. Other ATM objects are operative to control the functionality of a transaction such as authorization and customer profile management. Further, other ATM objects arc operative to manage transaction data and PIN processing.

[0312] In the exemplary embodiment, theater directors are created by visually configuring instances of these ATM objects. **FIG. 36** schematically represents a visual programming environment **220** that enables a programmer to visually construct a terminal director **225**. In the exemplary embodiment the visual programming environment is achieved using IBM's Visual Age for Java™. However, embodiments may encompass any visual programming environment that is operative to allow a user to visually associate groupings of individual ATM objects, to instantiate ATM objects, to specify characteristics of the objects, and to make connections between the objects.

[0313] The visual programming environment **220** includes a palette **222** including icons which are visual representations of these ATM objects. A programmer is enabled to usually create a terminal director **225** by selecting individual ATM objects as needed and place them in a visual work space **224**. Placing ATM objects in the work space **224** is operative to instantiate the object. Instantiated ATM objects are represented in the work space by labeled icons such as the ATM objects **230** and **232**. A developer is also enabled to link ATM objects together to create associations or pathways which the programming logic of the terminal director **225** will follow. These pathways are represented by a solid line **238** between the ATM objects.

[0314] Once an ATM object has been placed on the work space, it can be customized to specify how it will interact with other ATM objects. This is accomplished by modifying one or more properties of the ATM object and by creating visually indicated pathways or connections between ATM objects.

[0315] For example the ATM object **232** is representative of a specific type of ATM object called a backstage control that uses the services of the director manager to control such properties as the URL of the browser. In this described terminal director **225**, ATM object **232** has been labeled "service menu"**231** because it has been configured to have the browser open an HTML page for servicing the ATM.

[0316] ATM objects typically include one or more events. Such ATM object events are signals or messages that indicate something has happened. For example when a banking card is inserted into a card reader device, a card reader event will be triggered in an ATM object designed to monitor and control a card reader.

[0317] ATM objects also include methods. ATM object methods are operations or functions that an ATM object can perform. For example an ATM object for a card reader will include an eject method which is operative to have a card reader device eject a banking card.

[0318] **FIG. 39** is a chart of exemplary types of ATM objects **256** and their associated icons **258**. These ATM objects include the authorize object **260**, a backstage control object **262**, a card reader object **264**, a customer profile object **266**, a depositor object **268**, a dispenser object **270**, a keypad object **272**, a logic object **274**, an OCS object **276**, a presenter object **278**, a PIN entry object **280**, a printer object **282**, a sync object **284**, and a transaction data object **286**.

[0319] The exemplary authorization object **260** includes functionality for managing communication with an authorization agent such as a host banking system. In the exemplary embodiment such communication includes requests to authorize, commit, and reverse a transaction. The authorization object interacts with an authorization plug-in to send and receive status messages from the authorization host.

[0320] The exemplary backstage control object **262** includes functionality for using the services of the director manager to control the URL property of the browser, to load directors, and to receive events from the browser. The backstage control object comprises the functionality of the backstage applet **156** previously discussed. Every terminal director requires at least one backstage control object **262** which provides a communication link between the director manager and the terminal director. For example the backstage control object's navigate method may be used to change the HTML page being displayed. In addition theater events that are associated with inputs such as button presses in an HTML page are triggered from the backstage control object **262**.

[0321] The exemplary card reader object **264** is one of a number of ATM objects designed to control an ATM device. In this case the card reader object **264** includes functionality for controlling a card reader device.

[0322] The exemplary customer profile object **266** includes functionality for capturing and retrieving information about a customer. The profile object may include an indication if the user of the machine is a customer who is to conduct a banking transaction, or a servicer of the machine who is authorized to conduct one or several types of service activities. The profile object may also include the functionality of the profile applet discussed previously. The customer profile object **266** preferably interacts with one or more customer profile plug-ins to retrieve and update customer profile information stored in a plurality of different locations such as a local data store, an external data store, an appli-

Early Warning
IPR2024-01221
Ex. 1008-91

cation server, or any other location that is operative to store information related to the user of the ATM.

[0323] The exemplary depositor object **268**, dispenser object **270**, and keypad object **272** include functionality for controlling a depositor device, a dispenser device, and a keypad device respectively. The keypad object **272** includes the functionality of the keypad applet **170** discussed previously.

[0324] The exemplary logic object **274** is a special ATM object that does not monitor or control external ATM devices, but rather controls the flow of logic between ATM objects. The logic object **274** includes functionality for determining the truth value of a comparison between two operands and calls different methods of one or more ATM objects depending on the result of the comparison.

[0325] An exemplary OCS object **276** includes functionality for managing the processing of host commands and host command responses. The OCS object **276** interacts with an OCS server and a command/status plug-in to communicate with a host.

[0326] The exemplary presenter object **278** includes functionality for controlling a presenter device such as a device for presenting dispensed sheets. The exemplary PIN entry object **280** interacts with a PIN entry event server to manage the PIN entry mode. The exemplary printer object **282**, includes functionality for controlling a printer device.

[0327] The exemplary sync object **284** includes functionality for synchronizing multiple processing paths. The sync object **284** also provides a timer for one or more processing paths. For example in a terminal director designed to withdrawal cash a sync object can be used to manage the synchronous dispensing of the cash and preparation of the receipt.

[0328] The exemplary transaction data object **286** as discussed previously includes functionality for providing a repository of transaction data that can be shared among terminal directors, the browser, and the authorization agent. Examples of data managed by the transaction data object **286** include the withdrawal amount, account number, and account type. When the request method of the authorization object **260** is called, a copy of the transaction data from the transaction data object **286** may be passed to an authorization host to authorize the transaction.

[0329] These described ATM objects are used in an exemplary embodiment. However, other embodiments may include other types of ATM objects that encapsulate functionality of an ATM terminal. Other types of ATM objects may control devices such as a fingerprint reader, iris scanner, smart card reader, sound system, passbook printer, check scanner, statement printer, ticket printer, coupon printer, digitizing pad, phone card encoder or any other type of device that can be operatively connected to an ATM. In addition other ATM objects are operative to interact with databases, servers, and other types of computing systems for retrieving and sending data to and from the ATM terminal.

[0330] **FIG. 37** is representative of a portion of the visual workspace **224** that includes the exemplary pathway or association **238**. The exemplary association **238** corresponds to an event to method connection between the two ATM objects **230** and **232**. The exemplary visually programming environment uses event to method connections between ATM objects to control the functionality and flow of an ATM transaction. The flow of a transaction progresses from one ATM object to another by associating an event of one ATM object with a method of another ATM object. The visual programming environment in the exemplary embodiment includes visual clues for indicating the direction of flow of the program. For example, square **248** on one end of the connection **238** indicates the source ATM object. An arrowhead **250** on the opposite end of the connection **238** indicates the target ATM object. When an event in the source ATM object **230** is triggered the flow of the program will transfer to a method of the target ATM object **232**. Of course in other embodiments other types of visual indications of association between objects may be used.

[0331] For this exemplary terminal director **225**, ATM object **230** is a logic object **274** labeled "isService" that has been configured to trigger either a true event or a false event if the user does or does not have permission to service the ATM. ATM object **232** is a backstage control object **262** that as discussed previously is labeled "Service Menu" and includes a navigate method that is operative to open a service menu HTML page in the browser.

[0332] **FIG. 38** is representative of a window **246** in the visual programming environment for creating, editing, and modifying an event to method connection. Here the window **246** displays the parameters for the event to method connection **238** which specify that when the source event **243** is triggered in the source object **242**, the target method **245** will be called in the target object **244**.

[0333] As is shown in **FIG. 36**, not all groupings of ATM objects are interconnected. For example ATM object groups **252** and **254** are not connected. This reflects the characteristic of terminal directors to be event driven. Each of these groupings is representative of a specific terminal director function or subroutine that is initiated by the triggering of an ATM object event or a call to an ATM object method.

[0334] ATM object methods often require arguments. In the exemplary embodiment, these arguments can be supplied by parameters of the ATM object or other ATM objects by visually creating parameter connections or associations.

[0335] **FIG. 37** includes an exemplary visual parameter connection **236**. The visual parameter connection is operative to supply a value for an argument of a method. The visual parameter connection **236** includes a solid circle at one end which serves as a visual clue that the customer type of object **226** supplies the argument. The opposite end of the visual parameter connection **236** connects with the event to method connection **240**. The arrowhead **241** associated with the event to method connection is the visual clue that indicates that the isService logic object **230** includes a method that is the target of both the event to method connection and the parameter connection.

[0336] For this exemplary terminal director, ATM object **228** is a PIN entry object **280** that includes a PIN entry event. The event to method connection **240** has been configured so that when the PIN entry event is triggered a compare method of the isService logic object **230** is called. The parameter connection **236** indicates that the compare method is called with an argument supplied by the customer type customer profile object **226**. The compare method of the isService

Early Warning
IPR2024-01221
Ex. 1008-92

logic object **230** has been configured so that if the customer type data value of the customer profile object **226** equals a value representative of a servicer type customer, a true event will be triggered. Correspondingly if the customer type data value is not representative of a servicer, a false event will be triggered. Triggering of the true event as specified by the event to method connection **238** results in the navigate method of the service menu backstage control object **231** being called. Triggering of the false event as specified in the event to method connection **250** results in the navigate method of a main menu backstage control object **234** being called.

[**0337**] **FIG. 54** schematically represents the programming architecture of a terminal director that comprises ATM objects. As discussed previously a terminal director **290** is an applet that comprises a plurality of ATM objects **292** for sequencing ATM transactions. Each ATM device **298**, such as a card reader or printer, has a corresponding ATM object **292** that is operative to monitor and control the operation of each ATM device **298**.

[**0338**] The director manager **291** is operative to load and unload terminal directors **290** and helps to provide the programming path from the HTML pages **246** to terminal directors **290**.

[**0339**] For communicating with external hosts **304** the interface browser plug-ins provide an interface between ATM objects **292** in the terminal director **290** and an external host **304**. In the exemplary embodiment, these plug-ins support Diebold 91X format messages, including configuration, transaction, status, and command type messages.

[**0340**] Examples of these plug-ins include the OCS (Command Status) plug-in **302** and the authorization plug-in **300**. As discussed previously the OCS ATM object **276** interacts with the OCS plug-in to provide "in service" and "out of service" events, which originate from a host **304**. The OCS plug-in **302** also provides methods for sending command status and user events to the host **304**.

[**0341**] The authorization plug-in **300** is also operative to communicate with a host **304** that is operative as an authorization agent. The authorization object **300** interacts with the authorization plug-in **260** to manage transaction messages including authorization, commit, and reverse requests with the authorization agent host **304**.

[**0342**] As discussed previously the customer profile plug-in **306** is operative to retrieve user profile information from a local or remote database **308**. This information can be used to personalize the ATM terminal for each consumer **294** that uses the ATM terminal. The customer profile object **266** interacts with the customer profile plug-in **306** to retrieve and update customer information in the database **308**.

[**0343**] Once a terminal director is created in the work space **224**, the visual programming environment is operative to save the terminal director as an applet, Java class or other object. Such applets are operatively stored as programming instructions responsive to the ATM objects and associations visually created in the work space **224**. For example the terminal director may be stored as one or more source files. Also the terminal director may be compiled and stored in a form that is operative for use with the automated transaction machine of the present invention such as applets, EJBs, COMM objects, CORBA objects, DLLs, or any other type of software container. The visually created terminal director may then be integrated with other terminal directors to control the functionality of an ATM terminal. In the exemplary embodiment the terminal directors may reside in an accessible memory such as a hard disk or RAM of either a local computer or a remotely networked computer. In the exemplary embodiment the terminal directors may be retrieved by the ATM from a locally or remote file system. Also terminal directors may be retrieved from a local or remote database or web server. In other exemplary embodiments the terminal directors may be integrated into an application server.

[**0344**] During a typical customer session, the ATM terminal will use at least three directors: a control director, a transaction director, and the terminate director. The control director typically is responsible for card entry, PIN entry, and transaction selection. The transaction directors are responsible for authorization and device control in the course of the selected transaction. The terminate director is typically responsible for closing the transaction including the return of the card to the customer.

[**0345**] The visual programming environment used in the exemplary embodiment enables a user to create new terminal directors or to customize existing terminal directors to suit the requirements of a particular banking institution and the needs of customers using the ATM terminal. The visual programming environment provides a flexible and intuitive programming environment that allows a developer to visually connect a plurality of specialized ATM objects together to create an interactive ATM application.

[**0346**] FIGS. **40-53** schematically represent the properties, events, and methods associated with the ATM objects of the exemplary embodiment. Many of these ATM objects produce synchronous events. When methods or functions of the ATM objects are called to perform an action, the ATM object waits for the action to complete, then fires an event that indicates the result of the operation. In the exemplary embodiment there are four operation events that are common to most ATM objects. As shown in **FIG. 41** with respect to the authorization object **260**, these operation events **348** comprise an operation successful event **344**, an operation failed event **342**, an operation not available event **344**, and an operation not supported event **346**. The operation not available event **244** indicates that a device is temporarily unavailable because for example, it has been put in maintenance mode. The operation not supported event **346** indicates that a device is not supported on the ATM.

[**0347**] The exemplary authorization object **260** also includes a number of specialized events and methods. Examples of authorization object methods include an authorize method **320**, a commit method **322**, and a reverse method **324**. When these methods are invoked the authorization object **360** is operative to interact with the authorization plug-in to communicate messages with an authorization host to either authorize, commit, or reverse a transaction. The authorization plug-in converts the authorization methods into messages appropriate for the chosen host protocol, such as 91x messages. For example, terminal directors that are operative to perform a withdrawal transaction will typically include an authorization object **260**. Before cash is delivered to a consumer, an authorization request is sent to an authorization host by invoking the authorize object's authorize method **320**.

Early Warning
IPR2024-01221
Ex. 1008-93

[0348] The exemplary authorization object also includes a plurality of events such as a hot card event **326**, an invalid account event **328**, an invalid amount event **330**, an invalid PIN event **332**, and a surcharge event **334**. These events are triggered responsive to receipt of a status code from the authorization host. This exemplary embodiment of the authorization object **260** also includes the ability to extend the base set of events through a user status event **336**. The authorization plug-in can be configured to fire the user status event when a status message from an authorization host includes a unique status code. This code is placed into a user status field of the transaction object. When the user status event fires, the authorization object of a terminal director can be configured to call a method of a logic object which is operative to compare the value in the user status field to a known set of possible user codes.

[0349] **FIG. 41** is representative of the method and events for the backstage control object **262** of the exemplary embodiment. As discussed previously the backstage control object **262** interacts with the director manager **291** to set the URL in the browser, to load a new terminal director, and to set a new document base for the browser. In the exemplary embodiment the backstage control object **262** includes methods such as the navigate method **350**, the navigate director method **352**, and the clear document base method **354**.

[0350] The navigate method **350** is operative to set a new URL in the browser. The URL is passed as an argument to the navigate method. The URL can be an absolute address that includes the complete URL specification starting with "http:\\" or the URL can be a relative address that begins with a "\" and is relative to the fixed or current HTML or other document page. The navigate director method **352** is operative to load a new terminal director in addition to setting a new URL.

[0351] Both the navigate method **350** and navigate director method **352** include a timeout argument that specifies the number of seconds before a timeout is triggered and a timeout page is shown to the user. The timer is a means to prevent the ATM terminal from hanging indefinitely on a page should the customer stop making selections. The navigate timer argument can be set to zero for those cases when an event or timer for another ATM object is guaranteed to be triggered independent of the user.

[0352] The backstage control object **262** includes events such as an authorization request event **356**, a cancel PIN request event **358**, a print request event **360**, a no clicked event **362**, a session complete event **364**, a surcharge accepted event **366**, a surcharge rejected event **368**, a transaction completed event **370**, user events **372**, **374**, **376**, and a yes clicked event **378**. These events are triggered by the director manager responsive to the consumer's use of the current HTML page. In the browser, for example, a button on an HTML page can be configured to trigger one of these backstage control events responsive to the button being clicked.

[0353] The backstage control object **262** also includes a number of events that are only triggered responsive to the director manager itself. These events include a director loaded event **380**, a navigate director failed event **382**, a navigate failed event **284**, and a screen timeout event **386**. The director loaded event **380** is triggered when a terminal director is loaded. The navigate director failed event **382** is triggered when the HTML or a script in the browser invoked the director manager to navigate to a new URL and to change terminal directors and one of those actions failed. Similarly, the navigate failed event **384** is fired when the HTML or a script invoked the director manager to navigate to a new URL and the navigation failed. The screen timeout event **386** is triggered after the specified number of seconds has elapsed without an action from the user.

[0354] **FIG. 42** schematically represents the methods and events for the exemplary embodiment of the card reader object **264**. The card reader object enables a developer to create transaction directors that use and control the card reader device of an ATM. The card reader object **264** includes methods such as an enable method **390**, a disable method **392**, a deliver method **394**, and a retain method **396**. The enable and disable methods **390** and **392** enable and disable the card reader device respectively. The deliver method **394** is operative to eject the card for delivery back to the customer. The retain method **396** is operative to internally retain the card and is typically used in situations where the card is to be retained, such as when the card is expired, indicated as stolen or when the customer leaves the ATM without taking the card.

[0355] The card reader object **264** includes the following asynchronous events: card entered event **398**, card read event **400**, card retained event **402**, card taken event **404**, and card tease event **406**. Each of these events are triggered responsive to the action described in the name of the event. For example when the card is read, the card read event **400** will be fired. The card reader object **264** also includes the same set of synchronous operation events **408** as the operation events **348** described for the authorization object **260**. when a card is enabled data is read from the card and placed into a card reader server where the data can be transmitted to the host or used in customer profiling.

[0356] **FIG. 43** schematically represents an exemplary embodiment of the customer profile object **266**. The customer profile object **266** reads and writes information unique to a particular customer. The customer profile object **266** includes a plurality of properties such as a customer type **419**, a fast cash actual account **420**, a fast cash actual amount **421**, a fast cash preference account **422**, a fast cash preference amount **423**, a fast cash selected **424**, a language preference **425**, a last withdrawal account **426**, a last withdrawal amount **427**, and a persistent property **428**.

[0357] These properties can be used as arguments for other ATM object methods. In addition the read and write methods can be called by HTML pages to get or set these properties. The customer type property **419** differentiates between different classes of customers such as a servicer or consumer. The fast cash actual account **420** and the fast cash actual amount **421** identify the banking account withdrawal amount that was shown to the customer in HTML for the fast cash transaction. The fast cash preference account **422** and the fast cash preference amount **423** identify the banking account withdrawal amount that was selected by the customer from a preferences setup page to use for fast cash transactions. The fast cash selected property **424** specifies whether a withdrawal transaction is fast cash or not. A typical withdrawal director can use this property to determine if it needs to set up fast cash selection values. The language preference property **425** identifies the customer's

Early Warning
IPR2024-01221
Ex. 1008-94

preferred language. The last withdrawal account property **426** and the last withdrawal amount property **427** identifies the last account and amount that was used by the customer in a withdrawal transaction. The persistent property **428** identifies an instance of the customer profile bean as persistent. Any value set into a persistent object results in the value being written to the database or other data repository. Values set into a non-persistent instance of a customer object are lost at the end of a customer session.

[**0358**] A terminal director can be operatively programmed to display an HTML page in the browser that includes information and options to perform transaction responsive to the customer profile properties. As discussed previously options for maintaining the ATM can be presented to a user of type "servicer," whereas a user of type "consumer" would only be presented with options for performing transaction with the ATM. Also different levels of transaction functions may be correlated to the customer type. For example consumers who have a banking account with the financial institution that owns the ATM could be assigned a customer type that grants the consumer permission to conduct advanced transactions such as bill paying and check printing. However, customers of other banks may be assigned a customer type that only allows them access to simple transactions such as withdrawing cash.

[**0359**] The customer profile object may also be used to update customer profile information in the data store responsive to user interaction with the ATM. Such user interaction may result in a modification to the preferred language of the user, the fast cash actual properties, the fast cash preference properties, the fast cash selected property and the last withdrawal properties. For example by using the customer profile object to save the last withdrawal properties each time a dispense of cash is made, the terminal director is operative to present a HTML document to the user with an option for withdrawing the same amount of money the next time the user accesses the ATM.

[**0360**] Customer profile values are retrieved and updated from the data store responsive to user or customer identification information such as an account number or other unique value associated with the user. Such an account number is typically read from a card by a card reader device. However, in alternative embodiments, the ATM may enable the user to input the identifying value with an input device, such as a keypad, a biometric device, or any other device that is operative to receive information that identifies the user of the ATM.

[**0361**] In addition the customer profile object may be used to retrieve and save other types of information in the data store. Such information may include marketing information associated with the consumer which can be used by a terminal director to display targeted advertisements with the ATM through a browser for example. Also the customer profile values may be used by a terminal director to generate customized transaction options, or other selectable options for interacting with the ATM. Such information may be obtained from various sources as previously discussed. Some of such information may also be provided by the user. This may be done through an in person or automated data acquiring apparatus. Alternatively such information may be provided by the user through an online connection from a remote terminal such as a personal computer. Examples of such data acquisition approaches are described in U.S. Pat. No. 6,023,288 the disclosure of which is incorporated herein by reference.

[**0362**] The customer profile object **266** includes the following methods: the read or getter methods **410**, the write or setter methods **412**, the do persistence method **414**, the reset customer session method **416**, and the operation events **418**. The read methods **410** and write methods **412** are operative to retrieve and update the customer profile information. The do persistence method **414** is operative to force the customer profile server to flush all the persistent profile properties accumulated during the consumer session to the data repositories. The ATM terminal uses the do persistence method **414** to accumulate all the writes efficiently so as not to slow down a customer transaction. A typical terminal director will have the card taken event connected to the do persistence method, so that the updating of the data repositories occurs immediately following a customer session.

[**0363**] The reset customer session method **416** resets all profile properties to the uninitialized (null) state. This method is typically invoked between customer sessions in order to reset values accumulated for the previous customer. For example the card entered event can be connected to the reset customer session method **416** so that the customer profile data will be set to null for each new session.

[**0364**] **FIG. 55** schematically represents the architecture for using the customer profile object **266** to incorporating customer specific information with an ATM terminal. HTML pages **614** may include scripts which are instructions operative to get and set customer specific information through the customer profile object **266**. The customer profile object **266** is isolated by the customer profile server **600** and so does not have programming requirements to identify the data repository for the profile data. This architecture simplifies the task of personalizing the ATM terminal for each consumer. An institution can integrate its database logic into the ATM terminal by implementing a simple customer profile server.

[**0365**] The customer profile properties are read from a data repository such as a local database **608**, remote database **610**, magnetic or smart cards **612**, or any other type of data store. One or more registered plug-in classes **602**, **604** and **606** are configured to manage the reading and writing of profile data to the specific data store. In the exemplary embodiment there are two types of profile plug-in classes. The first is a FITProfile plug-in which manages customer type and other properties used internally by the ATM terminal. The second is a user preferences plug-in which manages user preferences such as those shown in **FIG. 43** for language and fast cash transactions. These preferences are typically read and written to a local database. In alternative embodiments of the customer profile architecture, other plug-ins can be implemented for connecting to any type of data store that contains useful information correlated to a customer. A developer of terminal directors can include an instance of a customer profile object **266** that is operative to interact with other data stores through these new plug-ins.

[**0366**] An exemplary embodiment of the depositor object **268** is schematically shown in **FIG. 44**. The depositor object **268** allows a developer of a terminal director to use and control the depositor device of an ATM. The depositor object includes an enable method **430**, a disable method **432**, and an unlock envelope door method **436**. These methods are

Early Warning
IPR2024-01221
Ex. 1008-95

operative to enable and disable the depositor and unlock the door of an envelope holder respectfully. The depositor object **268** also includes a set print data method **434** which specifies the transaction information that is to be printed on a deposited envelope.

[**0367**] In addition to the synchronous operation events **444**, the depositor object **268** includes the following asynchronous events: a deposit complete event **438**, a media inserted event **440**, and an unlock envelope door complete event **442**. Each of these events is triggered responsive to the action that is described by the name of the event.

[**0368**] **FIG. 45** schematically represents an exemplary embodiment of the dispenser object **270**. The dispenser object **270** provides an interface to the dispenser device and includes a dispense method **450** and a retain method **452**. The dispense method takes one or more of the following arguments: amount, family, and type. The amount argument is normally the transaction amount that has been validated for dispensing by the authorization agent. This value is obtained from the transaction data object **286**. The family and type arguments are descriptions of the kind of media that is to be dispensed. The retain method is operative to retrieve media such as bills that have been picked and moved to a presenter or other escrow device. In addition the dispenser object includes the operation events **454**.

[**0369**] An exemplary embodiment of the keypad object **272** is shown in **FIG. 46**. The keypad object includes an enable map method **460** which accepts an argument for specifying which key or keys are enabled and for mapping key inputs to mouse click type inputs. The disable method **462** selectively disables keys. The keypad object **272** also includes the operation events **464**.

[**0370**] **FIG. 47** schematically represents the exemplary logic object **274**. The logic object is operative to perform logical comparisons of the data items. Terminal directors use the comparison results to alter transaction flow. The logic object is typically used to compare a known value or a range of values with a current value contained somewhere in the transaction data object **286** or the customer profile object **266**. The logic object **274** includes a logic compare method which accepts two arguments that are the object of the compare. Depending on the result of the compare, the logic object **274** triggers either a true event **472** or a false event **474**.

[**0371**] **FIG. 48** schematically represents the exemplary OCS object **276**. This object interacts through the OCS server to the command/status plug-in and ultimately the host. The OCS object **276** includes the following methods: a send user event method **480**, a send command status method **482**, a send in service method **484**, and a send out of service method **486**. The send user event method **480** is operative to send an event to the command/status plug-in. The command/status plug-in can then use this information in combination with any subsequent reverse or commit to build the appropriate message for the authorization host. The send user event method **480** is typically used when the customer cancels a transaction or fails to take dispensed cash. This method can then be used to inform the host that the transaction was canceled, cash was retained, or there was a timeout.

[**0372**] The send in service method **484** and the send out of service method **486** are operative to enable the host to place the terminal in or out of service. In addition the OCS object **276** includes the following events: go in service event **488**, go out of service event **490**, handle OCS offline event **492**, and handle OCS online event **494**.

[**0373**] The command/status plug-in triggers the go in service event **488** and the go out of service event **490** upon receiving go in service and go out of service commands from the host. Terminal directors are normally configured to respond to these events by enabling or disabling devices such as the card reader or keypad. The command/status plug-in triggers the handle OCS online event **494** and the handle OCS offline event **492** when communication is started and stopped with the host.

[**0374**] An exemplary embodiment of the PIN entry object **280** is shown in **FIG. 49**. The PIN entry object **280** is operative to set the state of the PIN mode property in the PIN entry event server. The start PIN entry method **500** is operative to turn on the in PIN mode state. Responsive to the in PIN mode being turned on, the PIN server determines the correct number of PIN retries that the customer is permitted, and then enters a secure mode for precessing keypad input.

[**0375**] When the customer enters an acceptable PIN or when the customer presses the cancel button, the PIN entry event server sets the in PIN mode property to false. The cancel PIN entry method **501** is also operative to turn off the in PIN mode property and is typically called by a terminal director when a screen timeout event occurs.

[**0376**] The PIN entry object **280** includes events such as a PIN entered event **502**, a PIN entry canceled event **504**, a PIN entry denied event **506**, and operation events **508**. The PIN entered event **502** is triggered when the PIN entry event server determines that a PIN is either valid (local verification) or the PIN can be validated later by an authorization host. The PIN entry canceled event **504** is triggered responsive to a customer pressing the cancel button of the ATM terminal. The PIN entry denied event **506** is fired when local PIN verification is used and the customer exceeds the maximum number of PIN entry attempts.

[**0377**] An exemplary embodiment of the presenter object **278** is shown in **FIG. 50**. The presenter object **278** provides an interface to the presenter device and includes a deliver method **510**, a pre-deliver method **512**, and a retain method **514**. As the names of the methods suggest, the deliver method **510** delivers media to the customer, the retain method **514** retains media that has not been picked up by the customer, and the pre-deliver method **512** performs pre-delivery by moving media to just inside the gate of the presenter so that the media is ready to be made accessible to a customer.

[**0378**] The presenter object **278** includes an asynchronous media taken event **516** and the synchronous operation events **518**. The media taken event is fired when the customer takes the media from the presenter.

[**0379**] **FIG. 51** schematically represents the methods and events of the exemplary printer object **282**. The printer object **282** provides an interface to a receipt printer and includes the following methods: an append buffer method **520**, a deliver method **522**, a print method **424**, a print buffer method **526**, a print file method **528**, a print URL method **530**, and a retain method **532**. These print methods provide a number of ways to print information on a receipt. For

Early Warning
IPR2024-01221
Ex. 1008-96

example the append buffer method **528** is operative to append characters to the printer device buffer. The print buffer **526** method is then called to have the printer device print the contents of the buffer. The print method **524**, the print file method **528**, and the print URL method **530** are operative to print the contents of a specified string, file, or HTML or other document page respectively.

[**0380**] In addition to the operation events **518**, the exemplary print object **282** includes an asynchronous form taken event **534**. This event is triggered when a customer takes the printed form from the printer device.

[**0381**] An exemplary embodiment of the sync object **284** is shown in **FIG. 52**. The sync object provides synchronization between tasks. For example, the developer of a terminal director may want to dispense cash and print a receipt at the same time. However, the developer may want to wait for both tasks to complete before continuing. This is accomplished by connecting the operation events of the dispenser object **270** and the printer object **282** to the methods in the sync object. In this case the operation events of the dispenser object **270** and the printer object **282** are connected to sync0 method **542** and sync1 method **544**, respectively. The sync object **284** is operative to fire one or more of fifteen exit events depending on when and how the sync methods are called. Both the sync0 method **542** and the sync1 method **544** accept arguments representative of an event that is successful, that failed, that is not available, or that is not supported.

[**0382**] The sync object **284** also includes two sync timers that are started by a start time method **540**. These sync timers will time out in the number of seconds specified in the sync0 timeout property **550** and the sync1 timeout property **552**. If a sync timer times out, the sync timer is operative to trigger the corresponding sync method with an argument that the event failed. If a sync method is called prior to the corresponding sync timer timing out, the sync timer is canceled.

[**0383**] The exemplary sync object **284** includes a how to wait property which specifies the combination of sync methods that the sync object waits to occur. Examples include having the sync object **284** wait for the sycn0 method call, wait for the sync1 method call, wait for both the sync0 and the sync1 method calls, and wait for either the sync0 or the sync1 method calls.

[**0384**] In the exemplary embodiment there are **16** sync result properties **548** which control how the calls to the sync methods **542** and **544** are logically connected to produce exit events. Each of the 16 sync properties corresponds to one of the 16 exit events **546**. The developer can connect these exit events to methods of various other ATM objects depending on the desired flow of transaction logic. The exit events **546** are triggered responsive to the corresponding sync result properties **548**. For example the developer can set a sync result01 property to a value that is representative of an occurrence of a successful argument being used in calls to both the sync0 and sync1 methods. If both the sync0 and sync1 methods are called with successful arguments then the sync object will trigger an exit1 event. If one or both of the sync0 and sync1 methods are called with a failure argument then the exit1 event will not be called.

[**0385**] In the exemplary embodiment, the result properties can be set to a plurality of different values representative of sync1 and sycn0 being called with different combinations of arguments. In this way a plurality of exit events can be configured to fire for different combinations of the success or failure of calls to the sync0 and sync1 methods.

[**0386**] **FIG. 53** schematically represents an exemplary embodiment of the transaction data object **286**. The transaction object **286** provides a container for transaction specific data such as customer specific account information. Other ATM objects can access or set values in the transaction data object **286** by connection to or from the transaction data object's property values. The transaction data object **286** is typically used by the authorization object **260**. For example an instance of the transaction data object **286** is supplied as an argument for the authorization method **320** of the authorization object **260**.

[**0387**] The exemplary transaction data object **286** includes two account objects to support transactions that require more than one account, such as a transfer transaction. One of these account objects is operative to store source account information. The second of these account objects is operative to store target account information. In the exemplary embodiment these account objects are called the from account object **562** and the to account object **564** respectively. Each of these account objects stores information about the account, such as the account number, the financial institutional ID and address, the card holder's name and address, the available balance, the type of account, the date of last update and any other information that is useful for identifying an account.

[**0388**] In an exemplary embodiment which is operative to communicate with a host computer through 91X format messages, the 91x interface uses the transaction data object **286** in processing authorization requests. The 91x interface gets properties when building a request to the host and sets properties when processing the host's response. In the exemplary embodiment the transaction data object also includes general transaction properties **560** that are accessed by the 91x interface. Examples of these properties include the human language of the account holder, the account type, the current transaction type, status message associated with errors, the status and user codes of the transaction, the status severity, the available balance amount, the bank ID, and whether there is a surcharge.

[**0389**] The objects described herein and the methods and events associated therewith are exemplary. Other embodiments of the invention may include other or different objects in achieving the desirable properties of the invention.

[**0390**] Many ATMs include transaction function devices with the ability to perform similar functions. For example, an ATM may include both a statement printer and a receipt printer. The statement printer is typically used to print an itemized listing of financial transactions for a period of time. The receipt printer is typically used to print a record of the most current transactions. Both devices are operative to generate and provide printed material to a consumer. When one of the devices becomes inoperative, the ATM may disable one or more transaction operations that correspond to the device. For example, if the statement printer runs out of paper, an ATM can detect the problem and deactivate the operation of printing statements for consumers. If the receipt printer becomes jammed, the ATM may deactivate the entire ATM until the receipt printer can be repaired. Unfortunately

Early Warning
IPR2024-01221
Ex. 1008-97

in either of these cases, consumers will be aggravated by these problems, and the owner of the ATM may lose revenue associated with transaction fees.

[0391] An alternative exemplary embodiment is operative to reduce the occurrences of ATMs being taken out of service due to inoperative devices, by taking advantage of any overlapping functionality between similar transaction function devices in the ATM. For example, if the receipt printer becomes jammed or runs out of paper, the exemplary embodiment of the ATM is operatively programmed to use the statement printer to generate and dispense both statements and receipts for the consumer. Thus the receipt printer may be used as a fallback device for the statement printer and the statement printer may be used as a fallback device for the receipt printer. Although the statement printer and the receipt printer may use different sizes of paper, the exemplary ATM is operatively programmed to use different formats for printing information depending on the characteristics of the printer.

[0392] Other devices with overlapping functionality may be used in the same way. For example an ATM may include both a cash dispenser and a coin dispenser. If the cash dispenser becomes inoperative after running out of ten dollar bills, the coin dispenser may be used to dispense dollar coins until the ten dollar bills are replenished. Likewise, if a card reader malfunctions a keypad or touchscreen may be used to input data that would otherwise be read from the card. Likewise if a keypad fails a screen with adjacent function keys or a touch screen may be used as an alternative input device. If a display screen fails an audio output device may be used as a substitute output device. E-mail receipt capability may be used as a substitute for printing receipts. A validator that reads indicia from currency notes may substitute for an inoperative check reader or vice versa. Of course these are merely examples.

[0393] **FIG. 56** shows a schematic diagram of a programming architecture that is operative to achieve this exemplary fallback functionality. Here the ATM **700** includes a terminal director **710** comprised of a plurality of ATM objects **712** such as those discussed previously. In the exemplary embodiment the ATM objects **712** correspond to Java beans; however, in alternative exemplary embodiments other types of objects and classes may be used that are appropriate for the hardware and application software platform of the ATM including Active X and COMM objects.

[0394] In addition to the methods of the ATM objects discussed previously, each ATM object further includes a plurality of methods or functions related to the capabilities of the underlying devices **724** and **726**. These methods include an is-present method **714**, a use rule method **716**, and a select type method **718**. The select type method **718** is operative to specify which type of device the ATM object is associated therewith. For example, a printer object is operative to communicate with both a receipt printer **724** and a statement printer **726**. The select type method **718** can be used to specify that a particular instance of the print ATM object corresponds to a receipt printer.

[0395] The is-present method **714** is operative to determine if the desired type of device is present in the ATM. This method enables a terminal application to be self configuring with respect to different types of transactions. For example, if an is-present method **714** returns a negative value for a statement printer, the terminal functionality that corresponds to printing statements can be hidden from the consumer. In this manner, the exemplary ATM objects are operative to determine the capabilities of the ATM objects and configure the operation of the ATM responsive to the determined capabilities.

[0396] In alternative embodiments, methods may be used which include arguments for different types of features of the desired device or service. For example the is-present method or another capabilities method of a printer object could be passed an argument that corresponds to color printing. If colored inks are present, the printer object can be configured to print multicolored indicia. These exemplary methods enable a single generic type of ATM object such as a printer object, to support a plurality of specialized devices, such as a receipt printer, statement printer, thermal receipt printer, color printer, or any other printer device.

[0397] The use rule method **716** is operative to specify a set of rules for determining which device an ATM object will initially use, and which device will be used when the current or default device is inoperative. The exemplary embodiment includes a data store **720** which is operative to store a plurality of such rules sets **721** for each of the devices in the ATM. For example the data store may include a default set of rules for a card reader object that specifies that if there is only one card reader device, a card reader object will be automatically connected thereto. If there is more than one printer device, a rule set can be created and used by a printer object that includes a hierarchy and may specify for example that a receipt printer device is the default printer for receipts and a statement printer device is a fallback printer in cases where the receipt printer device is unavailable.

[0398] In the exemplary embodiment rule sets and their associated devices **724** can be created and saved in the data store **720** by a configuration program **722** in operative connection with the data store **720**. Such a configuration program **722** is also operative to store which devices are currently installed in the ATM. The configuration program is further operative to store in the data store **720** specific capabilities such as features or characteristics that are associated with each device. The results of the is-present method **714** can be determined by querying the data store **720** for the corresponding type of device and/or feature of the device.

[0399] In an alternative embodiment, where individual devices include self configuration features, such as Sun Microsystems JINI™ and Microsoft Universal Plug and Play™, individual devices **724** themselves may be operative to upload details of their features and/or corresponding service proxies to the data store **720**.

[0400] The exemplary ATM **700** further includes a device interface layer **728**. The exemplary device interface layer **728** may be comprised a plurality of ODS (Open Device Services). In addition the device interface layer **728** may be comprised of one or more device API layers such as a J/XFS (Java/eXtensions for Financial Services) kernel or a WOSA/XFS (Windows Open Services Architecture/eXtensions for Financial Services) manager. These components and layers of the device interface layer **728** are operative to provide an interface between the ATM objects **712** and corresponding hardware devices **724** and **726**.

[0401] In one exemplary embodiment, the ODS components and/or the XFS components are operatively pro-

Early Warning
IPR2024-01221
Ex. 1008-98

grammed to provide an interface between the ATM objects **712** and the data store **720** for determining which devices and features of devices are present in the ATM. The device interface layer **728** is further operative to process rules in the data store **720** for determining default devices and the order of fallback devices. Responsive to the information associated with rules, present devices, and device capabilities stored in the data store **720**, the device interface layer **728** is operative to have each ATM object **712** communicate with a device **724** that includes the appropriate capabilities required by the ATM object.

[**0402**] **FIG. 57** shows an exemplary embodiment of an ATM **740** that includes a device interface layer comprised of an enhanced J/XFS kernel **742**. The J/XFS kernel **742** includes a device type manager **744**. The device type manager **744** is operative to communicate with a plurality of ATM objects **746** and create corresponding instances of device control **750** objects responsive to the rule sets selected by the ATM object. The rule sets are retrieved from a data store **748** in operative connection with the device type manager. The device controls **750** are operative to control the operation of ATM devices **754** through communication with device services **756** (i.e. device drivers) according to the J/XFS specification. The device controls **750** generally correspond to device services. Messages between the device type manager **744** and the device controls **750** are queued by device command servers **752** which generally correspond to the device controls **750**.

[**0403**] Responsive to events caused through operation of at least one processor, the device type manager **744** routes messages to the correct device command server **752** responsive to the rule sets in the data store **748** which cause the device to be selected based on the hierarchy associated with the event and the capability of the device. The device type manager **744** is further responsive to a rule set and associated hierarchy to switch to the next appropriate device command server **752** if the health of one of the current devices **754** becomes inoperative.

[**0404**] **FIG. 58** shows another exemplary embodiment. Here the ATM objects **770** are operative to control the operation of devices **772** through communication with ODS components **774**. ODS components **774** are designed to abstract the differences between inconsistent vendor implementations of service provider interfaces **778** (i.e device drivers) beneath a consistent and uniform interface. In this described exemplary embodiment the ODS components **774** control the operation of the devices **772** through communication with a WOSA/XFS layer **776**. The WOSA/XFS layer **776**, in turn communicates with the devices **772** through the vendor provided service provider interfaces **778**. In this described exemplary embodiment the ODS layer **773** has been enhanced to include the previously described functionality of the device interface layer. Thus the exemplary ODS components **774** are operative to communicate with the data store **779** to provide capability information to the ATM objects **770**. The ODS components **774** are also operative to process rules sets for determining which service provider interfaces and devices are to be used initially and which are to be used as fallback devices when the default devices become inoperative.

[**0405**] **FIG. 59** shows another exemplary embodiment. Here the device controls **760** of the J/XFS layer **761** are operative to control the operation of devices **762** through communication with ODS components **764**. As discussed previously the ODS components **764** control the operation of the devices **762** through communication with a WOSA/XFS manager **766**. The WOSA/XFS manager communicates with the devices **762** through the vendor provided service provider interfaces **768**. For ODS components that are comprised of C, C++, COMM, .NET or other non-Java components, the present exemplary embodiment encompasses placing a JNI (Java Native Interface) wrapper around the ODS components **764** to form J/XFS compatible device services **765**. The device services **765** provide an interface for the Java based J/XFS layer to communicate with the ODS components **764** and the windows based WOSA/XFS manager **766**.

[**0406**] Computer software used in operating the automated transaction machines of the present invention and connected computers is comprised of machine readable instructions which may be read from articles of various types by the respective computers. Such computer software may be included on and loaded from one or more articles such as diskettes or compact disks. Such software may also be included on articles such as hard disk drives, tapes or read-only memory devices. Other articles which include data representative of the instructions for operating computers in the manner described herein are suitable for use in achieving operation of transaction machines and systems in accordance with various embodiments.

[**0407**] The exemplary embodiments of the automated banking machines and systems described herein have been described with reference to particular software components and features. Other embodiments may include other or different software components which provide similar functionality.

[**0408**] Thus the new automated banking machine and system described may achieve one or more of the above stated objectives, eliminate difficulties encountered in the use of prior devices and systems, solve problems and attain one or more of the desirable results described herein.

[**0409**] In the foregoing description certain terms have been used for brevity, clarity and understanding. However no unnecessary limitations are to be implied therefrom because such terms are for descriptive purposes and are intended to be broadly construed. Moreover the descriptions and illustrations herein are by way of examples and the invention is not limited to the details shown and described.

[**0410**] In the following claims any feature described as a means for performing a function shall be construed as encompassing any means known to those having skill in the art to be capable of performing the recited function and shall not be deemed limited to the particular means shown in the foregoing description or mere equivalents thereof.

[**0411**] Having described the features, discoveries and principles of the invention, the manner in which it is constructed and operated and the advantages and useful results attained; the new and useful structures, devices, elements, arrangements, parts, combinations, systems, equipment, operations, methods, processes and relationships are set forth in the appended claims.

We claim:

1. A method comprising:

a) dispensing cash from an automated banking machine to a user responsive to at least one instruction included in at least one markup language document.

b) sending at least one message to at least one remote system address associated with the user responsive to the dispense of cash in step (a).

2. The method of claim 1 and further comprising:

c) accepting a check with the automated banking machine;

d) generating an electronic image of at least a portion of the check with an imaging device in the banking machine.

3. The method according to claim 2 wherein (b) includes sending at least one message including the electronic image.

4. The method according to claim 1 prior to (b) further comprising:

c) presenting indicia corresponding to the at least one remote system address through an output device on the machine.

5. The method according to claim 4 further comprising:

d) receiving at least one input from the user through at least one input device on the machine confirming the at least one remote system address output in step (c).

6. The method according to claim 4 further comprising:

d) receiving at least one input from the user through at least one input device on the machine operative to change the at least one remote system address.

7. The method according to claim 2 wherein the check is associated with a payor, and further comprising:

e) enabling the payor to access the electronic image.

8. The method according to claim 7 wherein the check is drawn on an account with a payor bank, and further comprising:

f) operating the machine to cause the electronic image to be sent to the payor bank.

9. The method according to claim 8 further comprising:

reading indicia on the check with a transaction function device in the machine, wherein at least a portion of the indicia corresponds to the payor bank, and wherein in (f) the electronic image is caused to be sent to the payor bank responsive to the portion of the indicia.

10. The method according to claim 7 and prior to (e) further comprising:

operating the machine to include a digital watermark in the image.

11. The method according to claim 1 and further comprising:

capturing image data adjacent to the machine proximate to (a);

wherein in (b) the at least one message includes such image data.

12. The method according to claim 1 wherein in (b) the remote system address is associated with a bank associated with the user, and further comprising:

accessing data included in the at least one message by the user by contacting the bank.

13. The method according to claim 1 wherein in (b) the at least one remote system address comprises an e-mail address associated with the user.

14. The method according to claim 1 wherein in (b) the at least one remote system address comprises a voice mail address associated with the user.

15. The method according to claim 3 wherein in (b) the at least one message is an HTTP message.

16. The method according to claim 15 wherein in (b) the at least one message is sent through the Internet.

17. The method according to claim 1 and further comprising:

(c) receiving at least one input from the user through at least one input device, wherein in (b) the at least one remote system address corresponds to the at least one input from the user.

18. The method according to claim 17 wherein in (c) the at least one input includes data read from a card input to the machine by a user.

19. The method according to claim 18 wherein the data read from the card in (c) corresponds to at least one HTTP address, and wherein in (b) the at least one message is sent to the at least one HTTP address.

20. The method according to claim 17 and wherein the at least one input device comprises a check receiving device, and wherein the at least one remote system address corresponds to data included on a check received into the machine.

21. Apparatus comprising:

an automated banking machine including at least one computer, at least one cash dispenser in operative connection with the at least one computer, and at least one communications device in operative connection with the at least one computer, wherein the computer is operative to cause the cash dispenser to dispense cash responsive to at least one instruction included in at least one markup language document received by the machine, and to cause an account to be assessed for the cash dispensed, and to send at least one message to a remote system address associated with the account.

22. The apparatus according to claim 21 wherein the computer is operative to send the at least one message to a remote system address uniquely associated with the account.

23. The apparatus according to claim 21 wherein the at least one message comprises an HTTP message.

24. The apparatus according to claim 21 wherein the machine further comprises at least one output device and at least one input device in operative connection with the computer, and wherein the computer is operative to cause the remote system address to be included in an output through the output device, and to cause the at least one message to be sent to the remote system address responsive to at least one input through the at least one input device provided to the machine responsive to the output.

Early Warning
IPR2024-01221
Ex. 1008-100

25. The apparatus according to claim 21 wherein the machine includes an imaging device operative to produce an electronic image of at least a portion of a check input to the machine, and wherein the at least one message includes the electronic image.

26. The apparatus according to claim 21 wherein the machine further comprises at least one input device, and wherein the remote system address corresponds to at least one input to the at least one input device.

27. The apparatus according to claim 26 wherein the at least one input device corresponds to a card reader and wherein the remote systems address corresponds to data read from a card by the card reader.

28. The apparatus according to claim 27 wherein the remote system address comprises an Internet address.

29. The apparatus according to claim 26 wherein the at least one input device comprises a device operative to read a check input to the machine, and wherein the remote systems address corresponds to indicia on a check input to the machine.

30. The apparatus according to claim 21 wherein the machine further comprises a check imaging device, and wherein the computer is operative to generate an electronic image of checks input to the machine.

31. The apparatus according to claim 21 wherein the machine comprises a check imaging device and wherein the computer is further operative to send an electronic image of at least one check to at least one remote system address.

32. The apparatus according to claim 31 wherein the computer is operative to cause a digital watermark to be included in the electronic image of the at least one check.

33. The apparatus according to claim 31 wherein the at least one check is drawn on an account with a payor bank, and wherein indicia on the at least one check corresponds to the payor bank, and wherein the computer is further operative to cause the electronic image to be sent to a remote system address associated with the payor bank responsive to the indicia included in the electronic image.

34. The apparatus according to claim 31 wherein the computer is operative to cause data corresponding to the electronic image to be stored in a data store, wherein a maker of the check is enabled to access the data corresponding to the electronic image in the data store.

* * * * *