US 20030206332A1

(19) United States

(12) Patent Application Publication (10) Pub. No.: US 2003/0206332 A1

Yamazaki et al. (43) Pub. Date: Nov. 6, 2003

(54) SELF-LIGHT EMITTING DEVICE AND METHOD OF MANUFACTURING THE SAME

(76) Inventors: **Shunpei Yamazaki**, Tokyo (JP); **Noriko Shibata**, Kanagawa (JP)

Correspondence Address:
FISH & RICHARDSON P.C.
1425 K STREET, N.W.
11TH FLOOR
WASHINGTON, DC 20005-3500 (US)

(21) Appl. No.: 09/817,675

(22) Filed: Mar. 27, 2001

(30) Foreign Application Priority Data

Mar. 27, 2000 (JP) 2000-087355

Publication Classification

(51) Int. Cl.[7] G02F 1/33; G02F 1/29

(52) U.S. Cl. 359/312; 359/308; 359/315

(57) ABSTRACT

To provide a process of successively forming from an EL layer, a cathode, a barrier layer and a cover layer in the same multi-chamber. By using a same film deposition method to form the EL layer and the cover layer, as shown in FIG. 1A, the EL layer, the cathode, the barrier layer, and the cover layer can be formed in the same multi-chamber in succession. Thus, as shown in FIG. 1B, a sealed structure of an EL element can be formed.

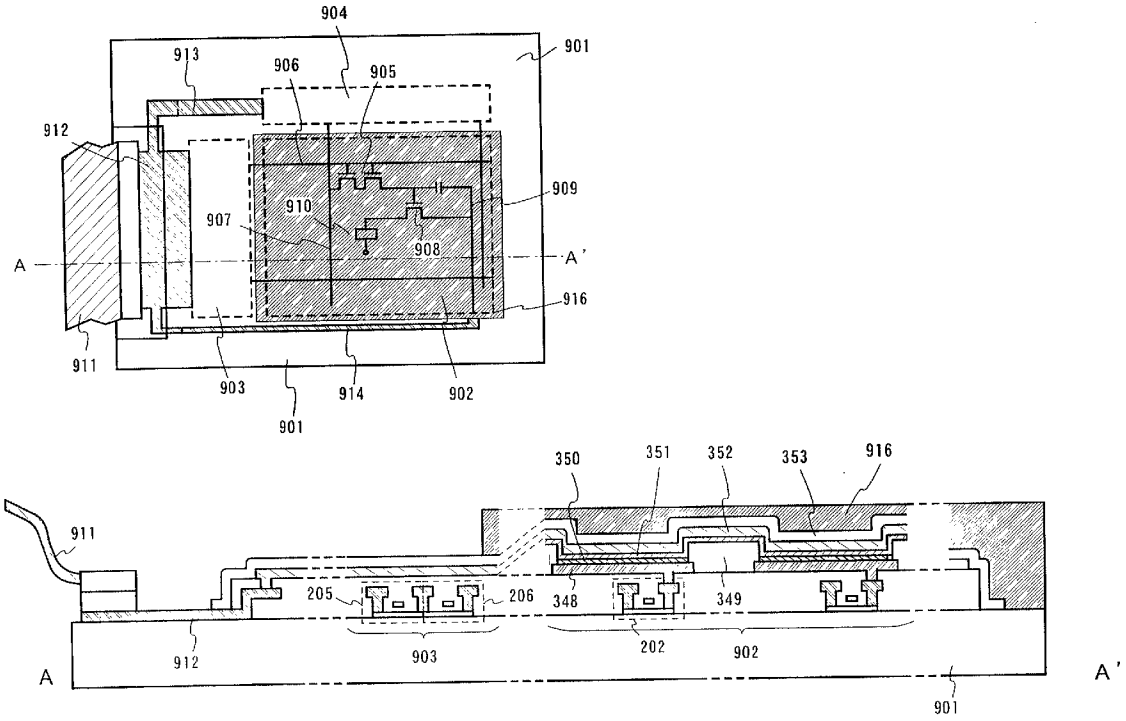

Fig.1A

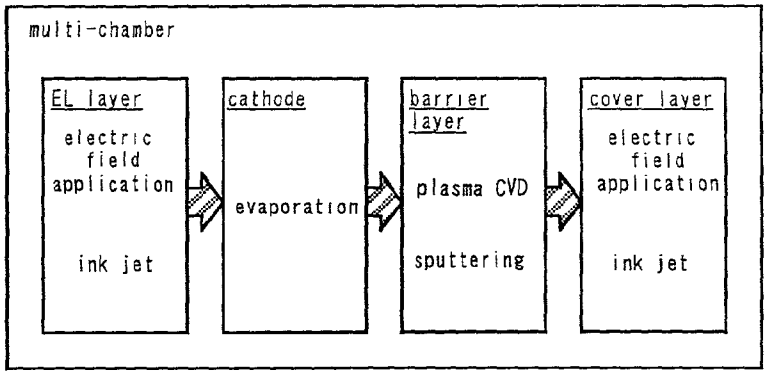

Fig.1B

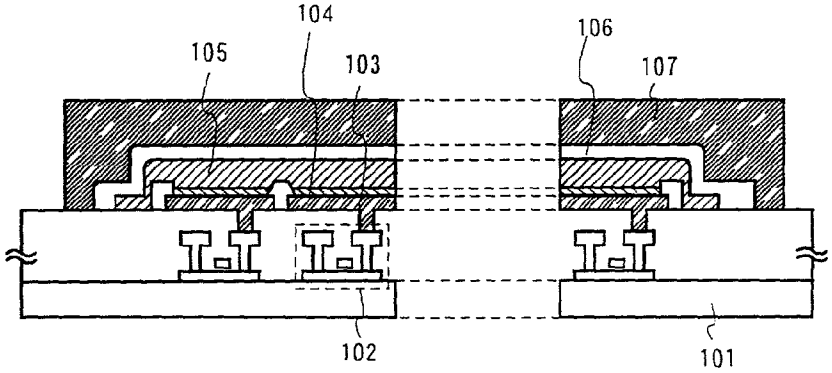

Fig.1C

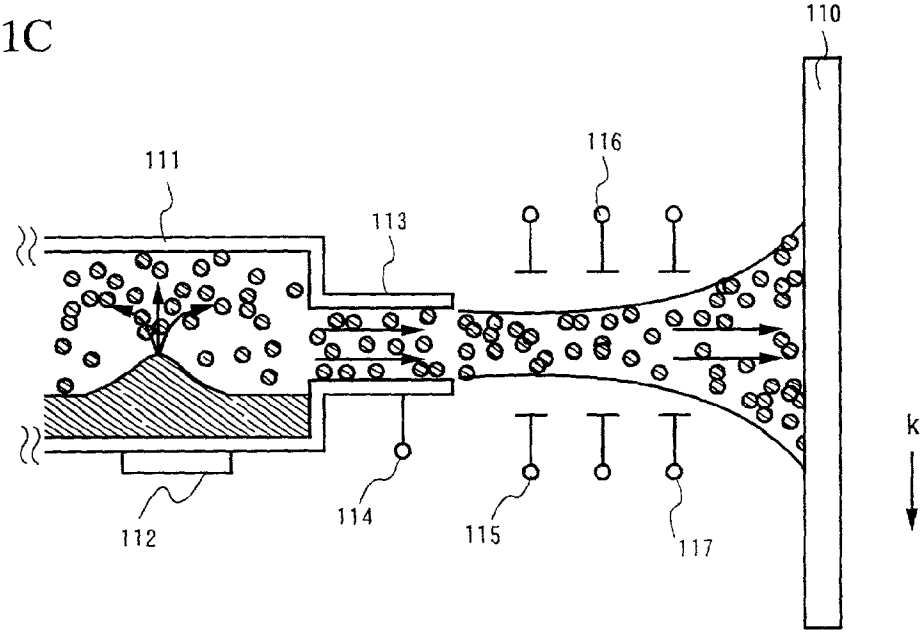

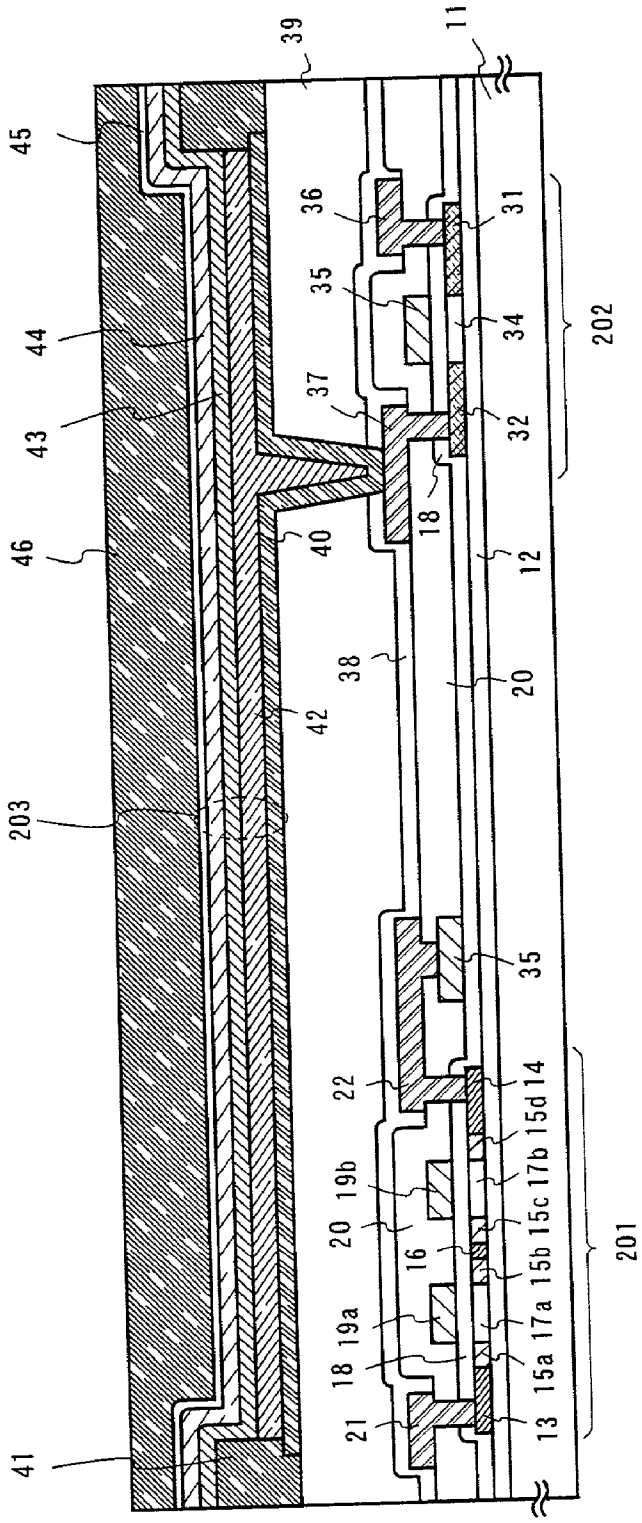
39
11
45
36
31
35
34
202
44
37
32
43
18
46
40
12
38
20
42
203
35
22
14
15d
17b
19b
15c
20
16
15b
201
17a
19a
15a
18
13
21
41

Fig.2

Fig.3A

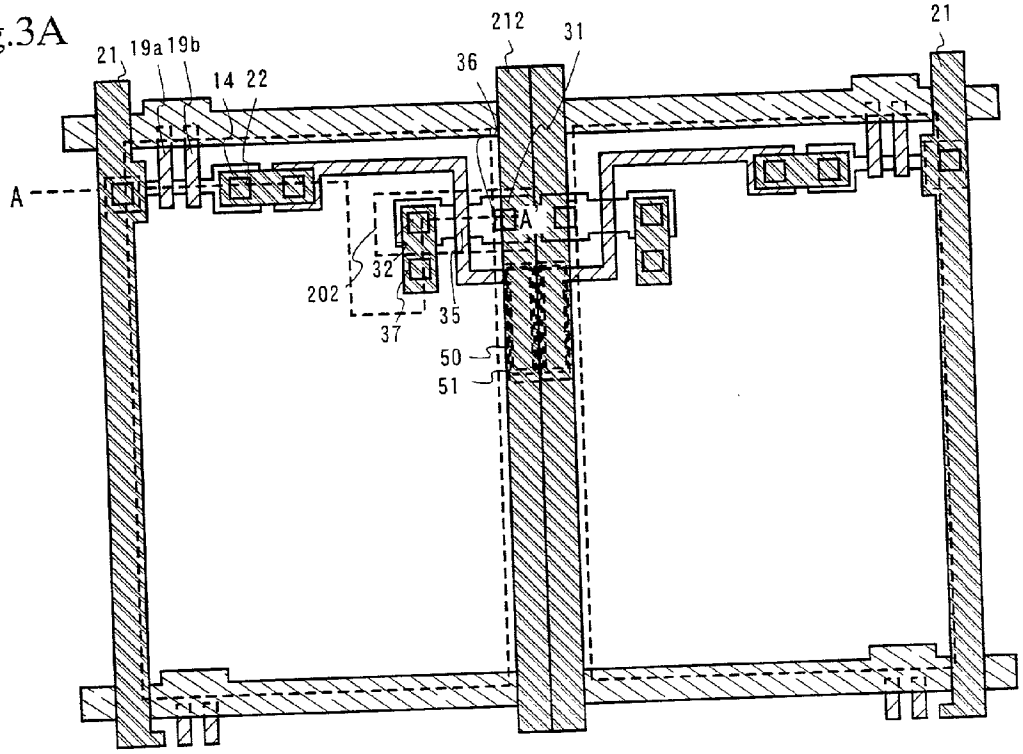
21
19a
19b
14
22
212
31
36
21
A
A
32
202
37
35
50
51

Fig.3B

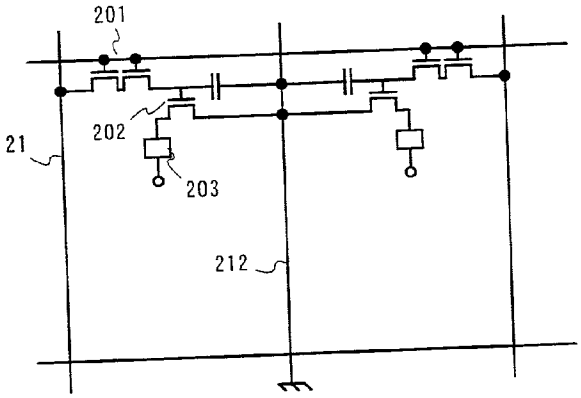
201
202
21
203
212

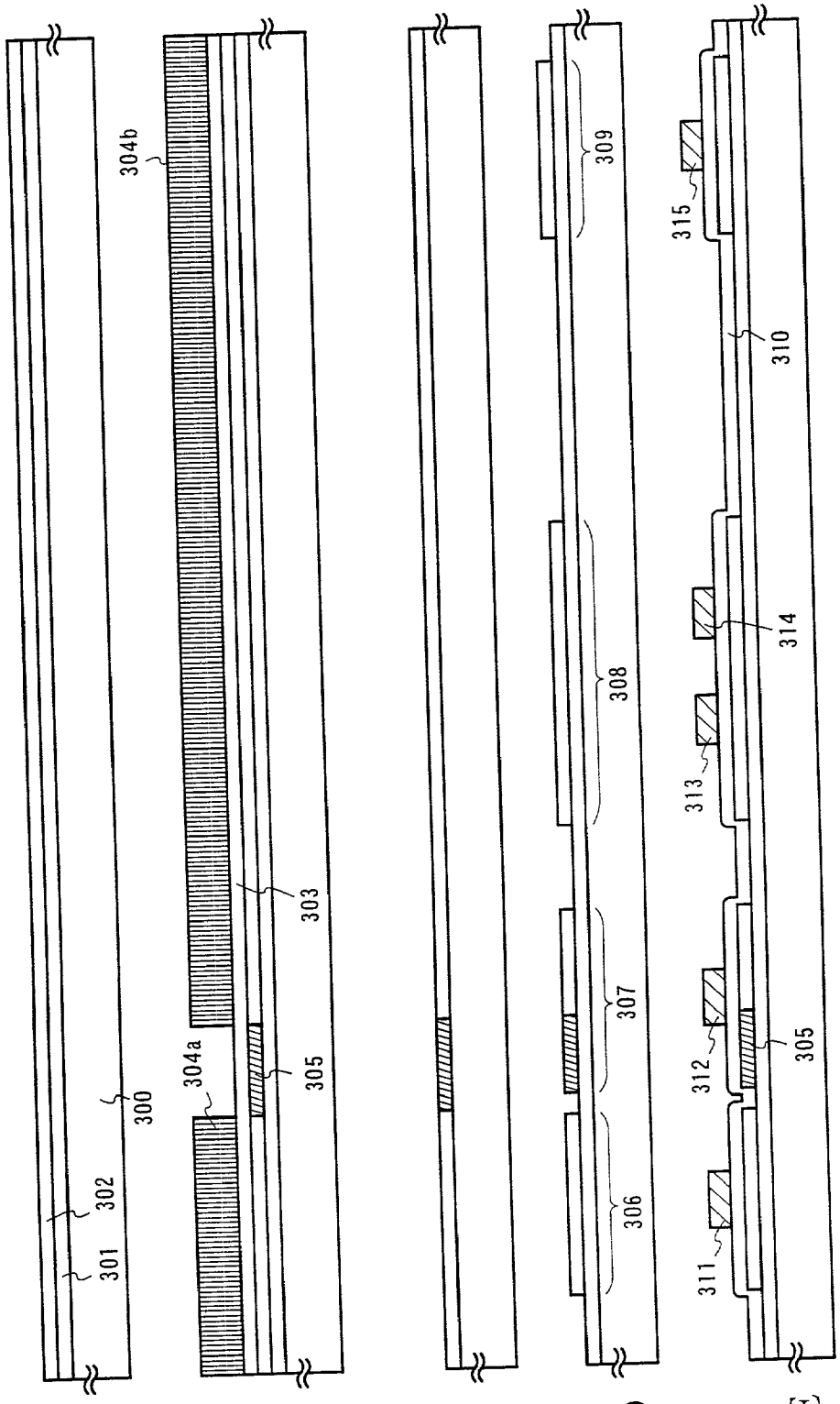

Fig.4A

Fig.4B

Fig.4C

Fig.4D

Fig.4E

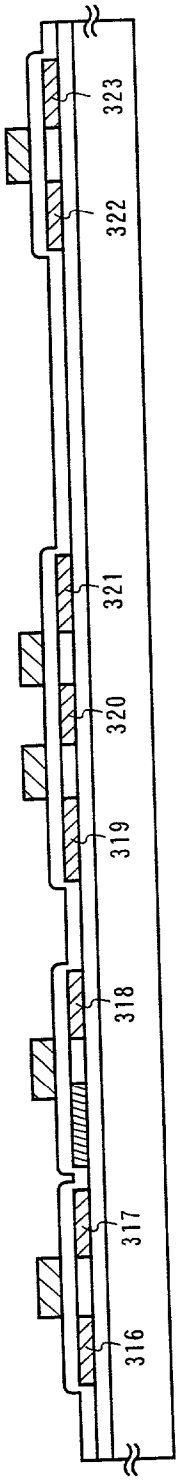

Fig.5A

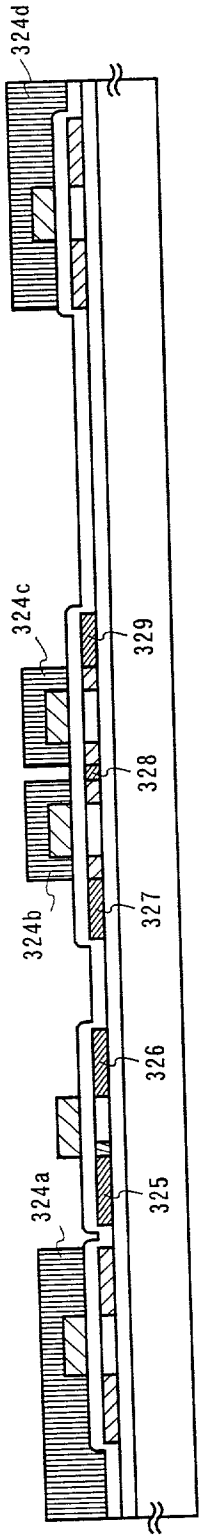

Fig.5B

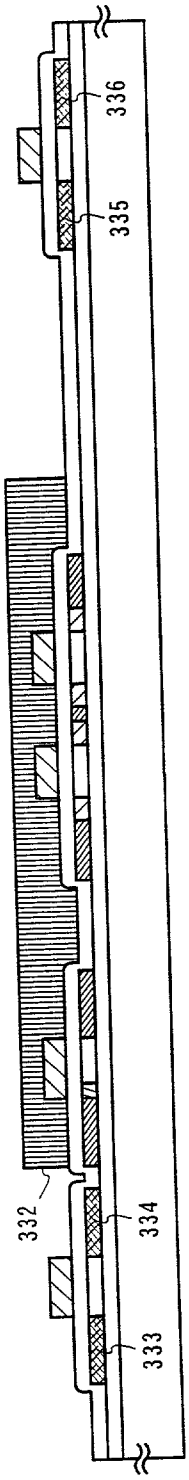

Fig.5C

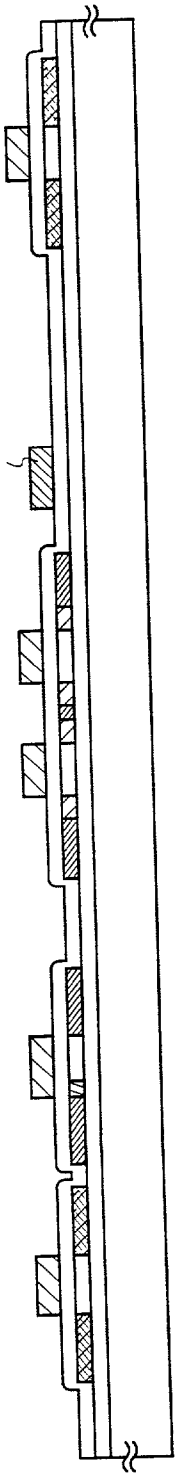

Fig.5D

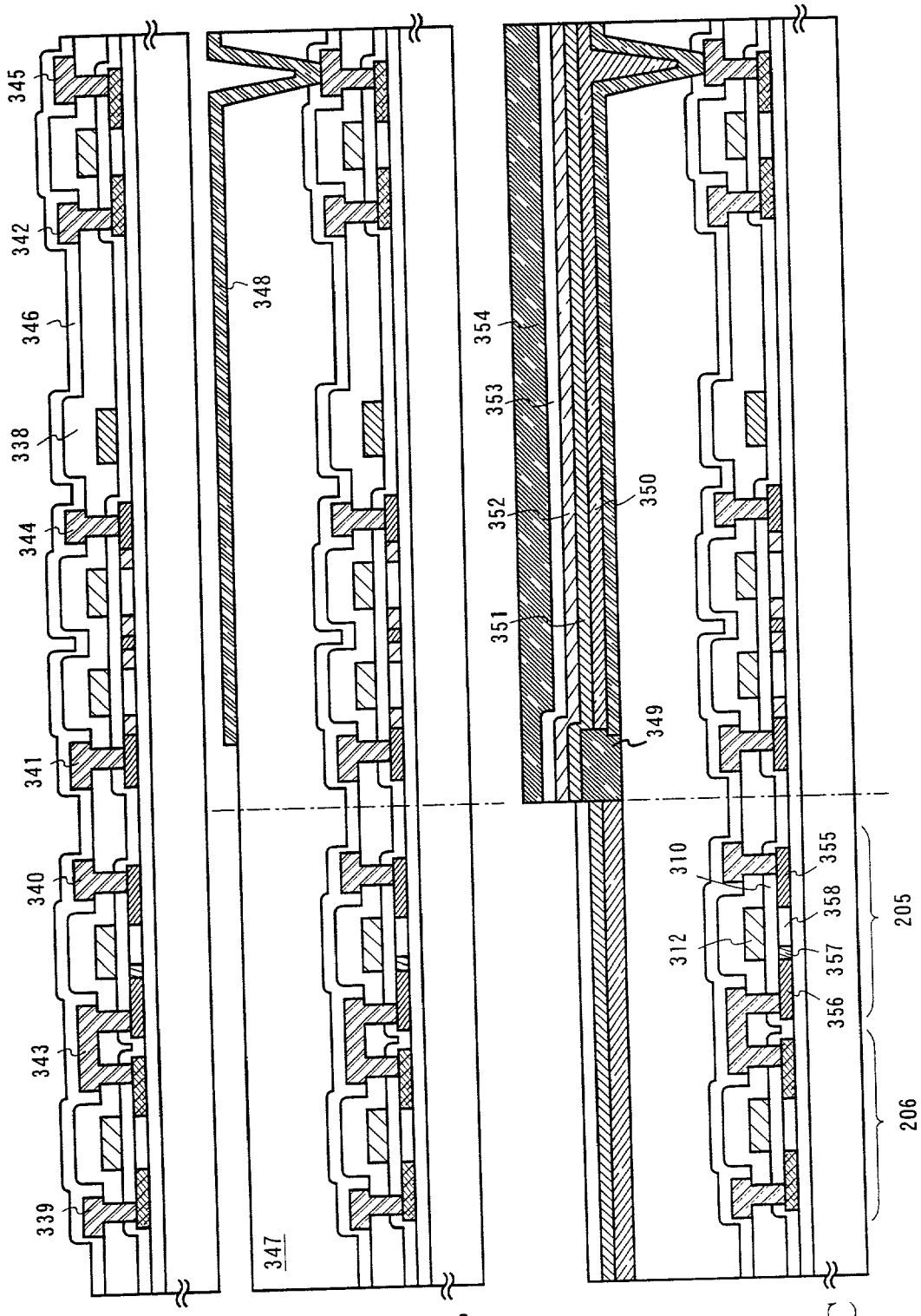

Fig.6A

Fig.6B

Fig.6C

Fig.7A

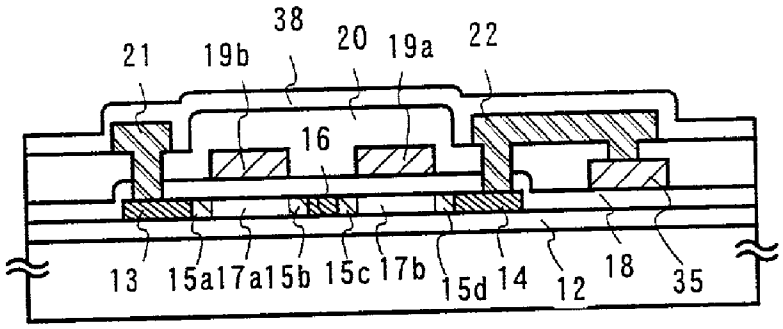
38
21
19b
20
19a
22
16
13
15a
17a
15b
15c
17b
15d
14
12
18
35

Fig.7B

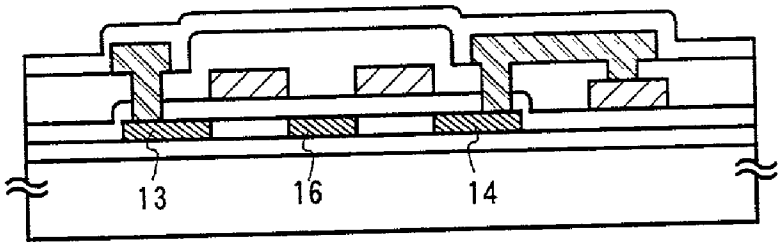
13
16
14

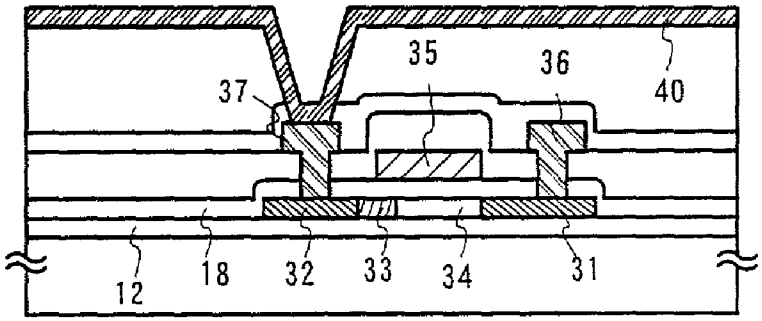

Fig.8A

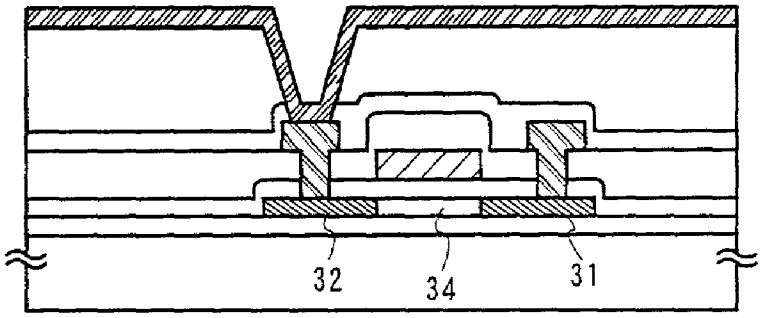

Fig.8B

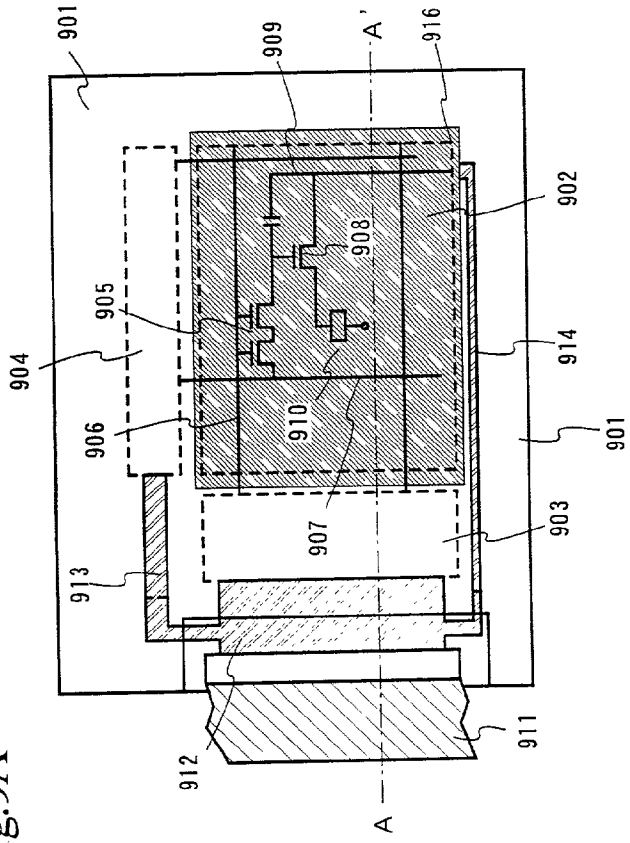
901
909
A'
916
902
908
905
904
914
906
910
901
907
903
913
911
912
A

Fig.9A

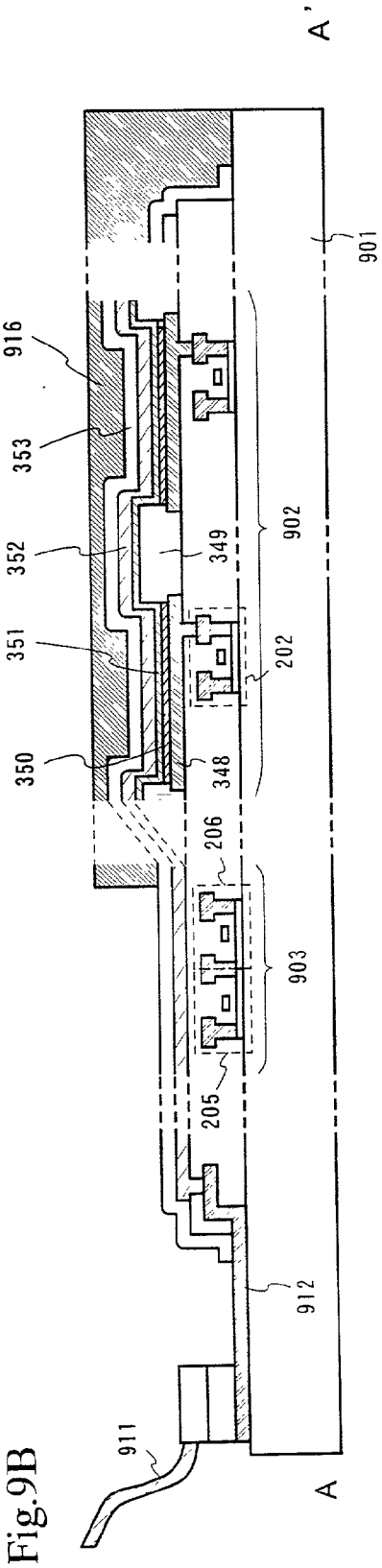
A'
901
916
353
902
352
349
351
202
350
348
206
903
205
912
911
A

Fig.9B

Fig.10

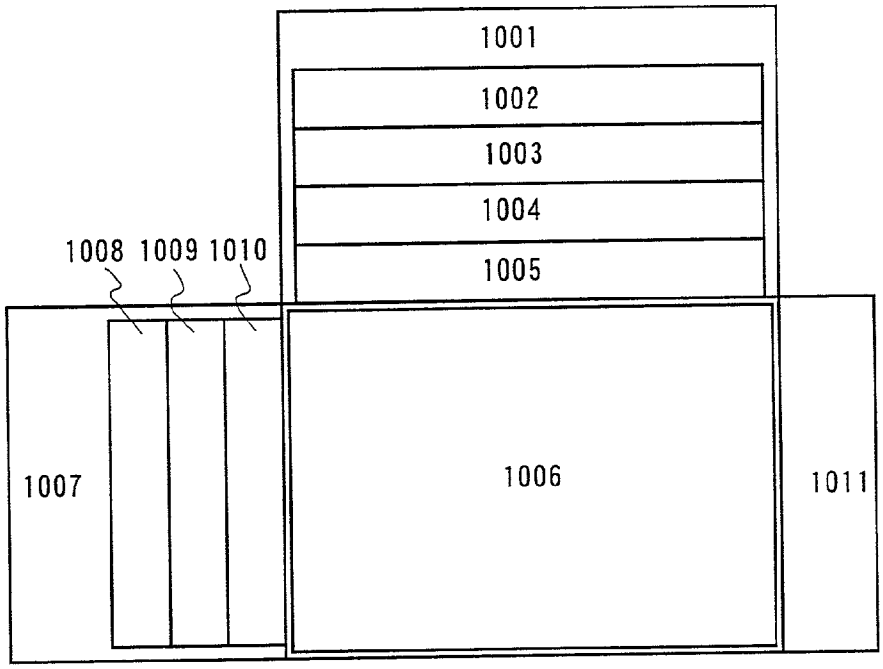

Fig.11

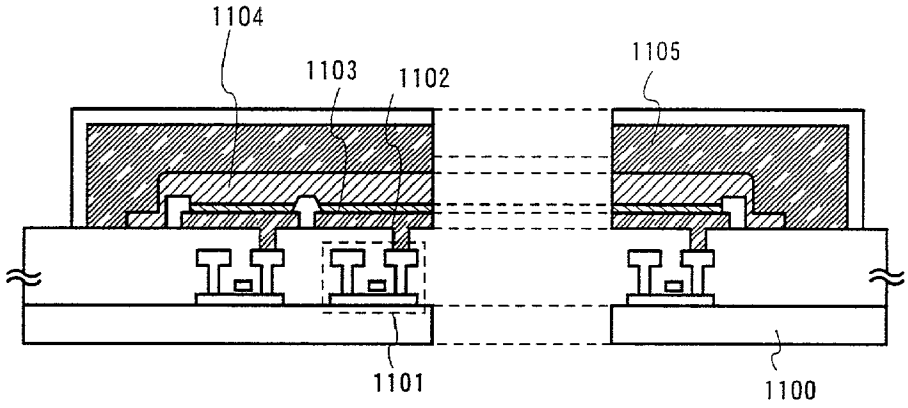

Fig.12

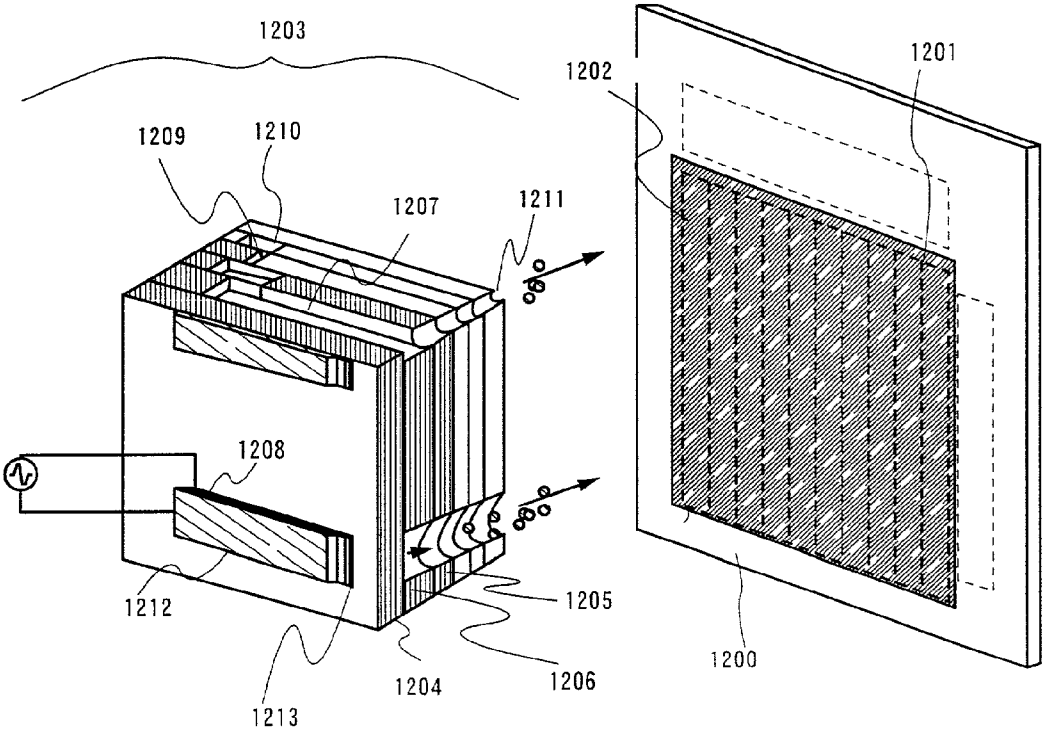
1203
1202
1201
1209
1210
1207
1211
1208
1212
1205
1206
1204
1213
1200

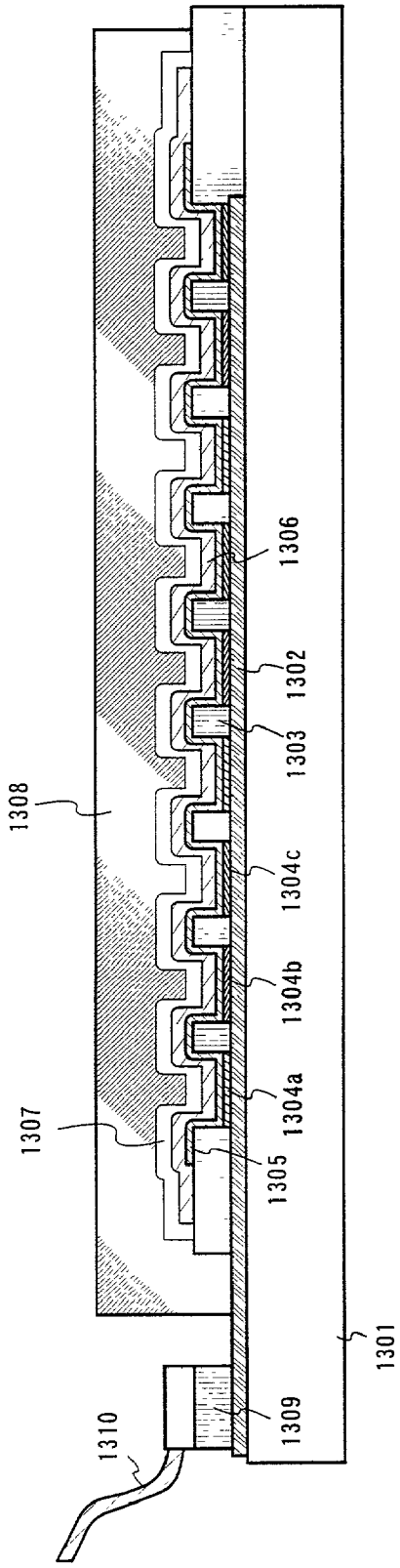
1306
1302
1303
1308
1304c
1304b
1304a
1307
1305
1301
1309
1310

Fig.13

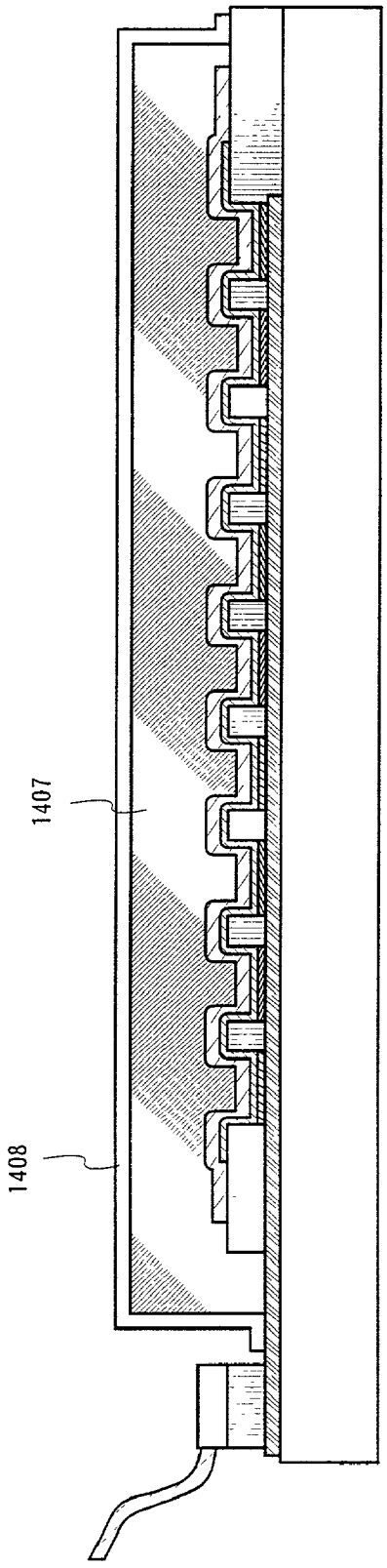

Fig.14

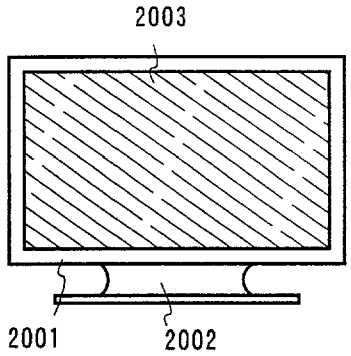

Fig.15A

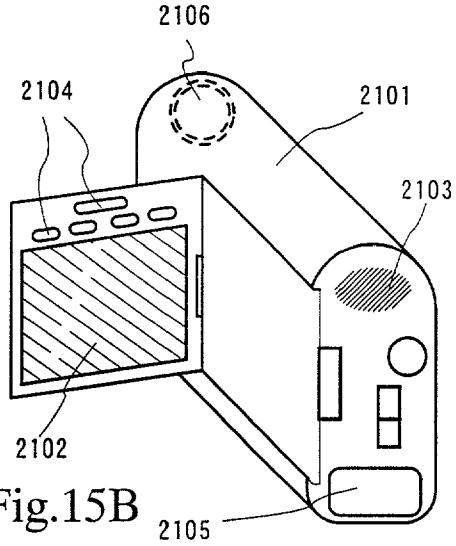

Fig.15B

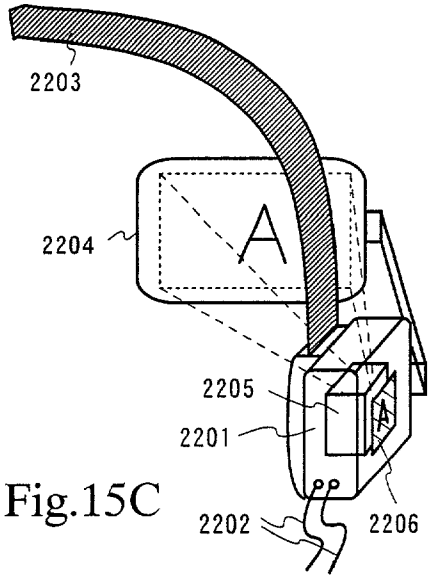

Fig.15C

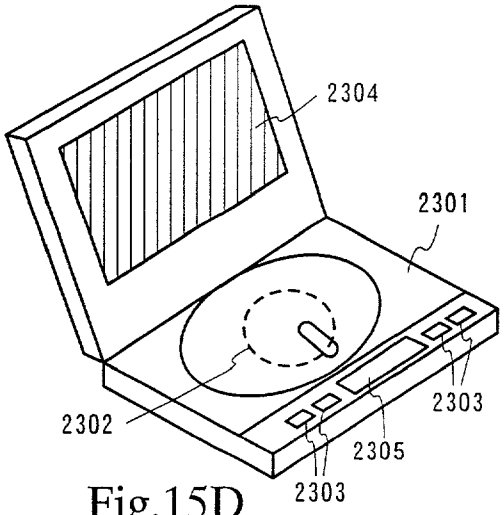

Fig.15D

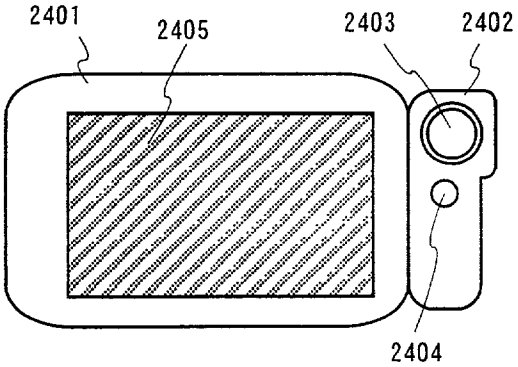

Fig.15E

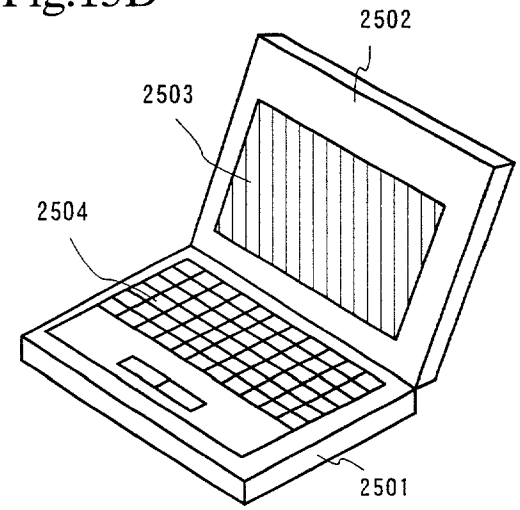

Fig.15F

Fig.16A

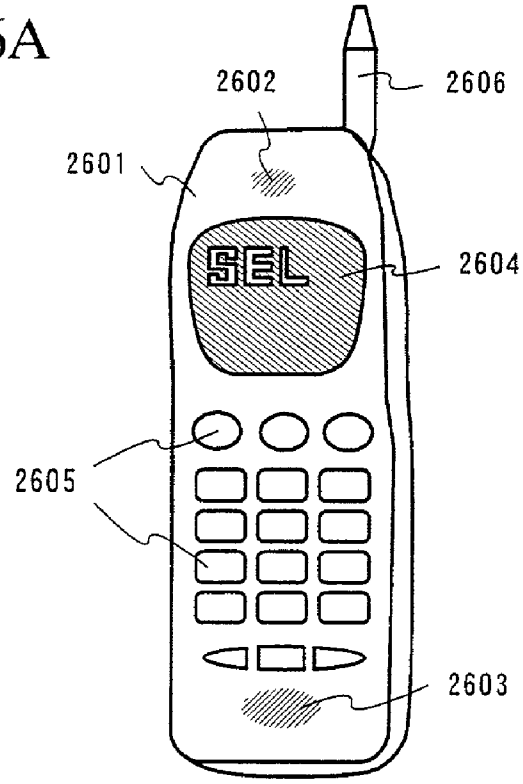

Fig.16B

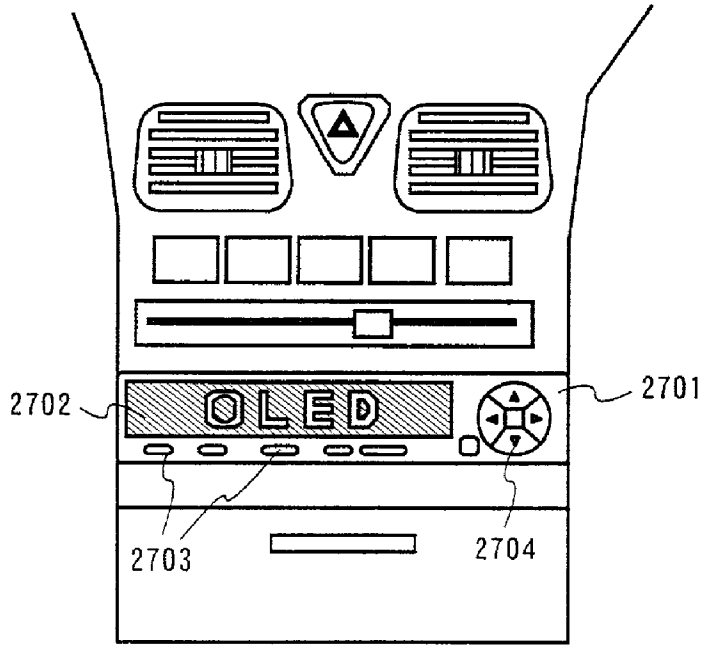

SELF-LIGHT EMITTING DEVICE AND METHOD OF MANUFACTURING THE SAME

BACKGROUND OF THE INVENTION

[0001] 1. Field of the Invention

[0002] The present invention relates to a self-light emitting device that has an EL element formed over an insulating member and constructed of a luminous organic material (hereinafter referred to as organic EL material) capable of obtaining EL (Electro Luminescence) sandwiched between an anode and a cathode, and to a method of manufacturing an electric appliance having the self-light emitting device as a display unit (a display or a display monitor). It is to be noted that the above-mentioned self-light emitting device is also referred to as an OLED (Organic Light Emitting Diodes).

[0003] 2. Description of the Related Art

[0004] In recent years, the development of a display device (self-light emitting device) using as an EL element a self-light emitting element that utilizes the EL phenomenon of a luminous organic material is proceeding. The self-light emitting device is a self-emissive type device and, hence, unlike a liquid crystal display device, does not need a back light. In addition, the self-light emitting device has a wide angle of view, and therefore is perceived as a prospective display unit for electric appliances.

[0005] Note that the EL element is composed of a layer containing an organic compound from which electro luminescence (luminescence generated by applying an electric field) can be obtained (hereinafter referred to as EL layer), an anode layer, and a cathode layer. There are two types of luminescence in an organic compound, one being a luminescence that is generated in returning to a ground state from a singlet excitation state (fluorescence) and the other being a luminescence that is generated in returning to a ground state from a triplet excitation state (phosphorescence). The present invention may be applied to either type of luminescence.

[0006] There are two kinds of self-light emitting device: a passive type (simple matrix type) and an active type (active matrix type), and both types are being developed actively. In particular, the active matrix type self-light emitting device is currently attracting much attention. In the EL materials for the EL layer which can be said as the core of the EL element, researches are being made on low molecular based organic EL materials and high molecular based organic EL materials (polymer based). The polymer type organic EL materials are particularly highly regarded since they are easier to handle and have higher heat resistance in comparison with the low molecular based organic EL materials.

[0007] A method in which an application is controlled by an electric field and an ink-jet method proposed by Seiko-Epson, Co. can be cited as film deposition methods for the polymer type organic EL materials.

[0008] According to the present invention, the same method is used to form the EL layer and a film made of an organic material (organic resin) (the film will hereinafter be referred as a cover layer) that is formed over the EL element and covering the EL element. It is to be noted that the cover layer is a layer made of an organic material and which will be formed over the cathode of the EL element composed of an anode, an EL layer, and a cathode. The provision of this cover layer is effective for the stress relaxation of the TFT or the EL element. Further, the permeation of moisture and oxygen into the EL layer can be prevented, whereby the degradation of the EL layer can be prevented. By further forming a film made of an inorganic material (hereinafter referred to as a barrier layer) on the cover layer, moisture and oxygen can be prevented from permeating into the cover layer or the EL layer.

SUMMARY OF THE INVENTION

[0009] It is to be noted that the present invention has an object to provide a process of successively forming an EL layer, a cathode, a barrier layer, and a cover layer in the same multi-chamber.

[0010] Further, another object of the present invention is to form the cover layer at a desirable position with good control. In addition, a further object of the present invention is to provide a self-light emitting device that employs such means and a method of manufacturing the same, and to provide an electric appliance having such a self-light emitting device as its display unit.

[0011] The multi-chamber employed for the purpose of attaining the above object is a film deposition device which has an application chamber for forming the EL layer and the cover layer made of an organic material by the ink jet method or the electric field application method, an evaporation chamber for forming the cathode by evaporation, and a sputtering chamber for forming the barrier layer made of silicon nitride or tantalum oxide.

[0012] It is to be noted that, in the present invention, in the case of forming the EL layer by application of a solution in which an EL material is dissolved in a solvent, then this solution is provided in a material chamber. The solution is referred as an application liquid throughout the present specification. When the application liquid becomes atomized and has an electric charge, then the application liquid is controlled by the electric field that is imparted by the electrodes, whereby the EL layer is formed over a substrate at the application position.

[0013] Further, for the cover layer, an organic resin liquid for forming an organic resin film is provided in the material chamber. The cover layer is formed by an application method that is similar to that for the formation of the EL layer.

[0014] Note that in the present invention the barrier layer may be formed after forming the cover layer on the cathode of the EL element, or the structure thereof may be one in which the cover layer is formed after forming the barrier layer on the cathode of the EL element.

BRIEF DESCRIPTION OF THE DRAWINGS

[0015] The above and other objects and features of the present invention will be more apparent from the following description taken in conjunction with the accompanying drawings:

[0016] **FIGS. 1A** to **1C** are diagrams showing a thin film formation method of the present invention;

[0017] **FIG. 2** is a diagram showing a cross-sectional structure of a pixel portion;

[0018] **FIGS. 3A and 3B** are diagrams showing a top view structure of a pixel portion and a configuration thereof, respectively;

[0019] **FIGS. 4A** to **4**E are views showing a manufacturing process of a self-light emitting device;

[0020] **FIGS. 5A** to **5**D are views showing a manufacturing process of a self-light emitting device;

[0021] **FIGS. 6A** to **6**C are views showing a manufacturing process of a self-light emitting device;

[0022] **FIGS. 7A and 7B** are views showing a cross-sectional structure of a TFT of a pixel portion;

[0023] **FIGS. 8A and 8B** are views showing a cross-sectional structure of a TFT of a pixel portion;

[0024] **FIGS. 9A and 9B** are views showing the outer appearance of a self-light emitting device;

[0025] **FIG. 10** is a diagram illustrating a circuit block configuration of a self-light emitting device;

[0026] **FIG. 11** is a diagram showing a cross-sectional structure of an active matrix type self-light emitting device;

[0027] **FIG. 12** is a diagram showing a thin film formation method;

[0028] **FIG. 13** is a diagram showing a cross-sectional structure of a passive type self-light emitting device;

[0029] **FIG. 14** is a diagram showing a cross-sectional structure of a passive type self-light emitting device;

[0030] **FIGS. 15A** to **15**F are views showing concrete examples of electric appliances; and

[0031] **FIGS. 16A and 16B** are views showing concrete examples of electric appliances.

DETAILED DESCRIPTION OF THE PREFERRED EMBODIMENTS

[0032] An embodiment mode of the present invention will be explained here with reference to **FIGS. 1A** to **1**C. As shown in **FIG. 1**A, an EL layer, a cathode, a barrier layer, and a cover layer can be successively formed in the same multi-chamber.

[0033] It is to be noted that the barrier layer is referred to as a passivation film provided for the purpose of preventing moisture and oxygen from penetrating into the EL layer and formed of an inorganic material.

[0034] First, the EL layer is formed in the application chamber by employing the electric field application method or the ink jet method. The cathode is formed next in the evaporation chamber by means of evaporation, and the barrier layer is further formed on the cathode. Using sputtering or plasma CVD, the barrier layer is formed of an inorganic film that is made of an inorganic material such as silicon nitride, tantalum oxide, aluminum nitride, or diamond-like carbon (DLC) made of carbon. Finally, on top of the barrier layer, the cover layer is formed in the application chamber by means of the ink jet method, similar to the formation of the EL layer, thereby completing the sealing structure of the self-light emitting device.

[0035] As thus explained, because the same method is used in forming the EL layer and the cover layer, the layers may be selectively formed only at the desired positions and may be processed in the same chamber.

[0036] The sectional structure of a lamination film formed in the present invention is shown in **FIG. 1B**. In **FIG. 1**B, reference numeral **101** denotes a glass substrate and reference numeral **102** denotes a current control TFT. Furthermore, reference numeral **103** denotes a pixel electrode that is made of a transparent conductive film electrically connected to the current control TFT. An EL layer **104** is formed on the pixel electrode **103** by using the above-mentioned method, and a cathode **105** is further formed on the EL layer **104** by evaporation.

[0037] In addition, a barrier layer **106** made of an inorganic film such as silicon nitride, tantalum oxide, or DLC film made of carbon, is formed on the cathode **105**. After the formation of the barrier layer **106**, a cover layer **107** made of an organic resin film is formed thereon by using the application method that is the same as the EL layer.

[0038] Shown in **FIG. 1C** is the electric field application method in which the application liquid is controlled by an electric field for application in the formation of the EL layer and the cover layer **107**.

[0039] In **FIG. 1**C, reference numeral **110** denotes the substrate with the formation of up to the barrier layer in the lamination structure shown in **FIG. 1B**. Reference numeral **111** denotes a material chamber that is provided with an organic resin liquid for forming the cover layer. In the material chamber **111**, an ultrasonic oscillator **112** is provided, and an electrode **114** is provided on a nozzle **113** at the tip of the material chamber **111**, where the organic resin liquid is to be discharged.

[0040] In the case of the present invention, the organic resin liquid is atomized in the material chamber **111** through the impartation of ultrasonic oscillation to the ultrasonic oscillator **112**. The organic resin liquid that has become atomized here is charged and turned into charged particles by the electrode **114** provided on the nozzle **113** of the material chamber **111**, thereby forming the EL layer and the cover layer at desirable positions on the active matrix substrate **110**.

[0041] A leading electrode **115** extracts the organic resin liquid that has become charged particles from the nozzle **113**, an accelerating electrode **116** accelerates the charged particles in a flying direction. Further, a controlling electrode **117** controls the application position to thereby apply the liquid on the desired position of the substrate **110**.

[0042] Thus, the sealing structure of the self-light emitting device in which the lamination structure shown in **FIG. 1B** can be formed in the same multi-chamber, is completed.

[0043] Note that **FIG. 1B** shows a case where the cover layer made of an organic material is formed after the formation of the barrier layer made of an inorganic material to cover the EL element. However, in the present invention, the barrier layer made of an inorganic material may be formed after the formation of the cover layer made of an organic material to cover the EL element.

[0044] [Embodiment 1]

[0045] **FIG. 2** is a sectional view of a pixel portion of an EL display device of the present invention, **FIG. 3A** is a top view thereof, and **FIG. 3B** is a view showing its circuit structure. Actually, pixels are arranged in a matrix form to form a pixel portion (image display portion). Incidentally, a sectional view taken along A-A' of **FIG. 3A** corresponds to **FIG. 2**. Thus, since common numerals are used in **FIG. 2** and **FIGS. 3A and 3B**, reference may be suitably made to the both drawings. Although the top view of **FIG. 3** shows two pixels, both have the same structure.

[0046] In **FIG. 2**, reference numeral **11** designates a substrate; and **12**, an insulating film (hereinafter referred to as an under film) which becomes an under layer. As the substrate **11**, a substrate made of glass, glass ceramic, quartz, silicon, ceramic, metal or plastic can be used.

[0047] Although the under film **12** is effective especially in the case where a substrate including a movable ion or a conductive substrate is used, it is not necessary to provide the under film on a quartz substrate. As the under film **12**, an insulating film containing silicon may be used. In the present specification, the "insulating film containing silicon" indicates an insulating film containing silicon, oxygen, or nitrogen at a predetermined ratio, such as a silicon oxide film, a silicon nitride film, or a silicon nitride oxide film (expressed by SiOxNy).

[0048] To dissipate heat of a TFT by making the under film **12** have a heat radiation effect is effective also in preventing deterioration of the TFT or deterioration of the EL element. Any well-known materials can be used for providing the heat radiation effect.

[0049] Here, two TFTs are formed in a pixel. Reference numeral **201** designates a switching TFT which is formed of an n-channel TFT; and **202**, a current controlling TFT which is formed of a p-channel TFT.

[0050] However, in the present invention, it is not necessary that the switching TFT is limited to the n-channel TFT and the current controlling TFT is limited to the p-channel TFT, but a modification can be made such that the switching TFT is made the p-channel TFT and the current controlling TFT is made the n-channel TFT, or both use the n-channel TFTs or the p-channel TFTs.

[0051] The switching TFT **201** includes a source region **13**, a drain region **14**, LDD region **15***a* to **15***d*, an active layer including a high concentration impurity region **16** and channel formation regions **17***a* and **17***b*, a gate insulating film **18**, gate electrodes **19***a* and **19***b*, a first interlayer insulating film **20**, a source wiring **21**, and a drain wiring **22**.

[0052] Besides, as shown in **FIGS. 3A and 3B**, the gate electrodes **19***a* and **19***b* have a double gate structure in which they are electrically connected to a gate wiring **211** formed of another material (material having resistance lower than the gate electrodes **19***a* and **19***b*). Of course, not only the double gate structure, but also a single gate or a so-called multigate structure (structure including an active layer having at least two channel formation regions connected in series) such as a triple gate structure may be adopted. The multigate structure is very effective in decreasing an off current value, and in the present invention, the switching element **201** of the pixel is made the multigate structure so that the switching element having a low off current value is realized.

[0053] The active layer is formed of a semiconductor film containing a crystalline structure. That is, a single crystal semiconductor film may be used, a polycrystalline semiconductor film or a microcrystalline semiconductor film may be used. The gate insulating film **18** may be formed of an insulating film containing silicon. Any conductive film may be used for the gate electrode, the source wiring or the drain wiring.

[0054] Further, in the switching TFT **201**, the LDD regions **15***a* to **15***d* are provided not to overlap with the gate electrodes **19***a* and **19***b* through the gate insulating film **18**. This sort of structure is very effective in decreasing the off current value.

[0055] Note that it is further preferable to provide an offset region (region made of a semiconductor layer of the same composition as the channel formation region and a gate voltage is not applied) between the channel formation region and the LDD region, in view of decreasing the off current value. In the case of the multigate structure having at least two gate electrodes, the high concentration impurity region provided between the channel formation regions is effective in decreasing the off current value.

[0056] Next, the current controlling TFT **202** includes an active layer including a source region **31**, a drain region **32** and a channel formation region **34**, a gate insulating film **18**, a gate electrode **35**, a first interlayer insulating film **20**, a source wiring **36**, and a drain wiring **37**. Although the gate electrode **35** has a single gate structure, a multigate structure may be adopted.

[0057] As shown in **FIG. 3**, the drain of the switching TFT is connected to the gate of the current controlling TFT **202**. Specifically, the gate electrode **35** of the current controlling TFT **202** is electrically connected to the drain region **14** of the switching TFT **201** through the drain wiring (which can also be called a connection wiring) **22**. The source wiring **36** is connected to a power supply line **212**.

[0058] The current controlling TFT **202** is an element for controlling the quantity of current injected to an EL element **203**, and it is not preferable to cause a large amount of current to flow in view of deterioration of the EL element. Thus, it is preferable to design a channel length (L) to be sufficiently long so that excessive current does not flow through the current controlling TFT **202**. It is designed to desirably make the current 0.5 to 2 μA per pixel (preferably 1 to 1.5 μA).

[0059] The length (width) of the LDD region formed in the switching TFT **201** is made 0.5 to 3.5 μm, typically 2.0 to 2.5 μm.

[0060] As shown in **FIG. 3A, a** wiring containing the gate electrode **35** of the current control TFT **202** is overlaped with a power source supply line **212** through an insulating film in a region denoted by the reference numeral **50**. A storage capacitor (condenser) is formed in the region denoted by the reference numeral **50**. It is also possible use a capacitor formed by a semiconductor film **51**, an insulating film (not shown in the figure) in the same layer as the gate insulating film, and the power source supply line **212** as the

storage capacitor. The storage capacitor **50** functions as a condenser for maintaining the voltage applied to the gate electrode **35** of the current control TFT **202**.

[**0061**] From the viewpoint of increasing the quantity of current which can flow, it is also effective to increase the thickness (preferably 50 to 100 nm, more preferably 60 to 80 nm) of the active layer (especially the channel formation region) of the current controlling TFT **202**. On the contrary, in the case of the switching TFT **201**, from the viewpoint of decreasing the off current value, it is also effective to decrease the thickness (preferably 20 to 50 nm, more preferably 25 to 40 nm) of the active layer (especially the channel formation region).

[**0062**] Next, reference numeral **38** designates a first passivation film, and it is appropriate that its film thickness is made 10 nm to 10 μm (preferably 200 to 500 nm). As its material, an insulating film containing silicon (especially a silicon nitride oxide film or a silicon nitride film is preferable) can be used.

[**0063**] A second interlayer insulating film (which may be called a flattening film) **39** is formed on the first passivation film **38** to cover the respective TFTs, so that a step formed by the TFTs is flattened. As the second interlayer insulating film **39**, an organic resin film is preferable, and it is preferable to use polyimide, polyamide, acrylic resin, BCB (benzocyclobutene) or the like. Of course, if sufficient flatterning can be made, an inorganic film may be used.

[**0064**] It is very important to flatten the step, which is produced by the TFT, through the second interlayer insulating film **39**. Since an EL layer formed later is very thin, there is a case where poor luminescence occurs due to existence of a step. Accordingly, it is desirable to make flattening before a pixel electrode is formed, so that the EL layer can be formed on the flattest surface as much as possible.

[**0065**] Reference numeral **40** designates a pixel electrode (corresponding to an anode of the EL element) made of a transparent conductive film, and after a contact hole (opening) is formed in the second interlayer insulating film **39** and the first passivation film **38**, the pixel electrode is formed to be connected to the drain wiring **37** of the current controlling TFT **202** at the formed opening portion.

[**0066**] In this embodiment, a conductive film made of a compound of indium oxide and tin oxide is used as the pixel electrode. Besides, a small amount of gallium may be added to this. Further, a compound of indium oxide and zinc oxide or a compound of zinc oxide and gallium oxide can also be used. Note that a recess produced after a pixel electrode is formed on a contact hole is called an electrode hole in this specification.

[**0067**] After the pixel electrode is formed, banks **41** made of resin material are formed. The banks **41** are formed by patterning an acrylic resin film or a polyimide film having a thickness of 1 to 2 μm. The banks **41** are respectively formed like a stripe between pixel arrays. In this embodiment, although they are formed along the source wiring **21**, they may be formed along the gate wiring **35**.

[**0068**] Next, an EL layer **42** is formed with the electric field application method as explained in **FIG. 1C**. Although only one pixel is shown here, EL layers corresponding to the respective colors of R (red), G (green) and B (blue) are formed.

[**0069**] As the organic EL material used for the EL layer, a polymer material is used. As a typical polymer material, polyparaphenylene vinylene (PPV), polyvinylcarbazole (PVK), polyfluorene or the like is named.

[**0070**] Although there are various types as the PPV organic EL material, for example, the following molecular formula is published ("H. Shenk, H. Becker, O. Gelsen, E. Kluge, W. Kreuder, and H. Spreitzer, "Polymers for Light Emitting Diodes", Euro Display, Proceedings, 1999, p. 33-37").

[**0071**] [chemical formula 1]

[**0072**] [chemical formula 2]

[**0073**] Besides, polyphenylvinyl of a molecular formula disclosed in Japanese Patent Application Laid-open No. Hei. 10-92576 can also be used. The molecular formula is as follows:

[**0074**] [chemical formula 3]

[**0075**] [chemical formula 4]

[**0076**] Besides, as the PVK organic EL material, there is a molecular formula as follows:

[**0077**] [chemical formula 5]

[**0078**] The polymer organic EL material can be dissolved in a solvent when it is in a state of polymer and can be coated, or can be dissolved in a solvent when it is in a state of monomer and can be polymerized after coating. In the case where it is coated in the state of monomer, a polymer precursor is first formed and is polymerized by heating in vacuum so that a polymer is formed.

[**0079**] As a specific EL layer, it is appropriate that cyanopolyphenylenevinylene is used for the EL layer emitting red light, polyphenylenevinylene is used for the EL layer emitting green light, and polyphenylenevinylene or polyalkylphenylene is used for the EL layer emitting blue light. It is appropriate that its thickness is made 30 to 150 nm (preferably 40 to 100 nm).

[**0080**] However, the above examples are merely examples of the organic EL material which can be used as the EL layer of the present invention, and it is not necessary to limit the material to these. In this embodiment, the mixture of the organic EL material and the solvent is coated with the electric field application system shown, and the solvent is volatilized to remove, so that the EL layer is formed. Accordingly, as long as the combination is such that the temperature when the solvent is volatilized does not exceed the glass transition temperature of the EL layer, any organic EL material may be used a low molecular material which is not mentioned here, or a high molecular material with a low molecular material may be used.

[**0081**] Toluene, xylene, chlorobenzene, dichlorobenzene, anisole, chloroform, dichloromethane, γ-butyl lactone, butyl cellosolve, cyclohexane, NMP (N-methyl-2-pyrolidone), cyclohexanone, dioxane, or THF (tetrahydrofuran) are exemplified as typical solvents. It is to be noted that a solution in which the above-mentioned EL material is dissolved is referred as an application liquid throughout the present invention. Further, it is preferable that the viscosity of the application liquid is between 1×10^{-3} and 3×10^{-2} Pa·s.

[0082] First, the application liquid prepared in the material chamber **111** is atomized by the ultrasonic oscillator **112** as shown in **FIG. 1C**. When the atomized application liquid become charged particles through the influence of an electric field from the electrode **114** that is provided on the nozzle **113**, then the application liquid is extracted from the nozzle **113** by the leading electrode **115**. After the extracted application liquid is accelerated by the accelerating electrode **116**, the application liquid is then controlled by the controlling electrode **117** and applied on the desired position. The EL layer is thus formed. It is to be noted that the application liquid is charged by the influence of the electric field of the electrode **114** that is attached to the nozzle **113** at the moment pf spurting out from the material chamber **111**, whereby it becomes charged particles.

[0083] In the present invention, first, the application liquid for a red color EL layer that is provided in the material chamber **111**, is atomized and controlled by an electric field, then applied to thereby form a row of pixels to luminesce a red color. Next, while moving the substrate by three rows in the direction of the adjacent row of pixels, the formation of rows of pixels to luminesce the red color is carried out at every two rows. The application liquid for a green color EL layer that is prepared in the material chamber **111** is next applied in the same way to thereby form rows of pixels to luminescence the green color at every two rows. Furthermore, the application liquid for a blue color EL layer that is prepared in the material chamber **111** is applied in the same way as the others to thereby form rows of pixels to luminescence the blue color.

[0084] By performing the above operation, a plurality of three rows of red, green, and blue pixels lined up in stripe shapes can be formed on the substrate.

[0085] Note that every time the kind of application liquid for the EL layer is changed, the material chamber **111** that is provided with the application liquid for the EL layer may be changed together therewith, or the material chamber **111** may be used with only changing the application liquids and not the material chamber. In addition, the nozzle **113** that is attached to the material chamber **111** is not limited to one nozzle, but two or more nozzles may be attached.

[0086] Further, although not used herein, a mask may be provided between the material chamber **111** and the substrate to thereby control the positions on the substrate at which the application liquid is via the mask. It is to be noted that the material chamber **111** and the mask may be provided separately, or they may be integrated into the device.

[0087] During the formation of the EL layer **42**, the atmosphere for processing is an atmosphere that contains little moisture and oxygen because the EL layer is easily degraded due to the presence of moisture and oxygen. That is, it is desirable to perform the formation of the EL layer in an inert gas such as nitrogen or argon. Further, an atmosphere of the solvent that is employed in preparing the application liquid may be employed as the atomosphere for processing scince the evaporation rate of the application liquid can be controlled.

[0088] Thus, after forming the EL layer **42**, a cathode **43** made of a light shielding conductive film and a protective electrodeb **44** are formed. In Embodiment 1, a conductive film made of MgAg is used as the cathode **43** and a conductive film made of aluminum is used as the protective electrode **44**.

[0089] It is to be noted that the above-mentioned EL layer is inferior to heat, and therefore it is desirable that the cathode **43** is formed at a the possible lowest temperature (preferably within the temperature range from room temperature to 120° C.). Accordingly, plasma CVD and sputtering are observed as desirable film deposition methods. Further, the substrate completed up to this point is referred as an active matrix substrate throughout the present specification.

[0090] In the present invention, after forming a barrier layer **45** that is made of an inorganic film such as silicon nitride, tantalum oxide, or carbon, a cover layer **46** that is made of an organic resin film is formed by using the electric field application method explained in **FIG. 1C**. A preferred viscosity of the organic resin liquid that is used for forming the cover layer **46** at this point is set between 1×10^{-3} and 3×10^{-2} Pa·s. In addition, the film thickness of the cover layer formed at this point is preferably 0.1 μm to 20 μm. However, it is possible to make the film thickness thereof thicker than the above stated range by repeating the application and drying processes.

[0091] The sealing of the self-light emitting device is completed when the cover layer **46** is formed. However, a sealing substrate such as a glass substrate, a quartz substrate, or a plastic substrate may be provided on the cover layer **46** to thereby complete the sealing structure of the self-light emitting device. It is also to be noted that the cover layer **46** may be made to have the role of functioning as an adhesive for bonding the active matrix substrate and the sealing substrate.

[0092] Note that as a countermeasure against moisture and oxygen which are cause of degrading the EL layer, a dry agent or an anti-oxidant such as barium oxide may be added into the cover layer made of an organic resin film.

[0093] [Embodiment 2]

[0094] In Embodiment 2 of the present invention, an explanation is made on a method of manufacturing at the same time a pixel portion and a TFT of a driver circuit that is provided in the periphery of the pixel portion with reference to **FIGS. 4A** to **6**C. However, in order to simplify the explanation, a CMOS circuit, which is the basic circuit for the driver circuit, is shown in the figures.

[0095] First, as shown in **FIG. 4A, a** base film **301** is formed to a thickness of 300 nm on a glass substrate **300**. A lamination film constituting a 100 nm thick silicon oxynitride film and a 200 nm thick silicon oxynitride film is used as the base film **301** in Embodiment 2. At this point, it is appropriate to set the nitrogen concentration of the silicon oxynitride film that is in contact with the glass substrate **300** to between 10 and 25 wt %. Of course, an element may be directly formed on the quartz substrate without the provision of the base film.

[0096] Next, an amorphous silicon film (not shown in the figure) is formed to a thickness of 50 nm on the base film **301** by using a known film deposition method. Note that the present invention is not necessarily limited to using the amorphous silicon film, but a semiconductor film containing an amorphous structure (including a microcrystal semiconductor film) may be used. In addition, a compound semiconductor film containing an amorphous structure such as an

amorphous silicon germanium film may also be used, and the film thickness thereof may be between 20 and 100 nm.

[0097] The amorphous silicon film is then crystallized by a known method to thereby form a crystal silicon film (also referred to as polycrystal silicon film or a polysilicon film) **302**. Thermal crystallization using an electric furnace, laser annealing crystallization using laser light, and lamp annealing crystallization using infrared light exist as known crystallization methods. Crystallization is performed in Embodiment 2 using light from an excimer laser which uses XeCl gas.

[0098] Note that the pulse emission type excimer laser light processed into a linear shape is used in Embodiment 2, but a rectangular shape may also be used, and that continuous emission argon laser light and continuous emission excimer laser light can also be used.

[0099] In Embodiment 2, although the crystal silicon film is used as the active layer of the TFT, it is also possible to use an amorphous silicon film. Furthermore, it is also possible to used the amorphous silicon to form the active layer of the switching TFT, which requires a lowering of the OFF current value, while using the crystal silicon film to form the active layer of the current controlling TFT. Carrier mobility is low in the amorphous silicon film, and therefore it is difficult for a current to flow therein, and as a result, it is difficult for an OFF current to flow. That is, the merits of both the amorphous silicon film in which it is hard to flow a current therein and the crystal silicon film in which it is easy to flow a current therein can be utilized advantageously.

[0100] Next, as shown in **FIG. 4B, a** protective film **303** made of a silicon oxide film is formed to a thickness of 130 nm on the crystal silicon film **302**. The thickness thereof may be chosen from the range of 100 to 200 nm (preferably between 130 and 170 nm). Furthermore, other films may also be used provided that they are insulating films containing silicon. The protective film **303** is provided so that the crystal silicon film is not directly exposed to plasma during the doping of an impurity, and so that it is possible to have delicate concentration control of the impurity.

[0101] Resist masks **304***a* and **304***b* are then formed on the protective film **303**, and an impurity element that imparts n-type conductivity (hereafter referred to as an n-type impurity element) is doped therein through the protective film **303**. Note that elements belonging to the Group 15 are generally used as the n-type impurity element. Typically, phosphorous or arsenic can be used. Also note that in Embodiment 2, a plasma (ion) doping method in which phosphine (PH_3) is plasma activated without separation of mass is used, and that phosphorous is doped at a concentration of 1×10^{18} atoms/cm^3. The ion implantation method, in which separation of mass is performed, may also be used, of course.

[0102] In an n-type impurity region **305** thus formed by this process, the dose amount of the n-type impurity element contained therein is regulated so that the concentration thereof is 2×10^{16} to 5×10^{19} atoms/cm^3 (typically between 5×10^{17} and 5×10^{18} atoms/cm^3).

[0103] Next, as shown in **FIG. 4**C, the protective film **303** and the resists **304***a* and **304***b* are removed to thereby activate the element belonging to Group 15 that is doped therein. A known activation technique may be used as the means of activation, and in Embodiment 2, activation is conducted by irradiation of an excimer laser light. Without being necessarily limited to the use of the excimer laser light, a pulse emission type excimer laser and a continuous emission type excimer laser may both, of course, be used. The aim here is the activation of the doped impurity element, and therefore it is preferable that irradiation is performed at an energy level at which the crystal silicon film does not melt. Note that the laser irradiation may also be performed with the protective film **303** in place.

[0104] It is to be noted that during the activation of the impurity element by laser light, activation by heat treatment may also be performed along therewith. When activation is performed by heat treatment, considering the heat resistance of the substrate, it is appropriate to perform heat treatment on the order of 450 to 550° C.

[0105] Due to this process, edge portions of the n-type impurity region **305**, that is, a boundary portion (connecting portion) and regions existing in the periphery of the n-type impurity regions **305** and not doped with the impurity element will become distinct. This means that, at the point when the TFTs are later completed, extremely good connections can be formed between LDD regions and channel forming regions.

[0106] As shown in **FIG. 4**D, unnecessary portions of the crystal silicon film are removed next to thereby form island-like semiconductor films (hereinafter referred to as active layers) **306** to **309**.

[0107] Then, as shown in **FIG. 4E, a** gate insulating film **310** is formed covering the active layers **306** to **309**. An insulating film containing silicon and having a thickness of 10 to 200 nm, preferably between 50 and 150 nm, may be used as the gate insulating film **310**. The film thereof may take a single layer structure or a lamination structure. A 110 nm thick silicon oxynitride film is used in Embodiment 2.

[0108] A 200 to 400 nm thick conductive film is formed next and patterned, thereby forming gate electrodes **311** to **315**. The edge portions of the gate electrodes **311** to **315** may be formed into taper shapes. Note that in Embodiment 2, the gate electrodes and lead wirings that are electrically connected to the gate electrodes (hereinafter referred to as gate wirings) are formed from different materials. Specifically, a material having a lower resistance than that of the gate electrodes is used for forming the gate wirings. The reason for this resides in that a material which is capable of being micro-processed is used as the gate electrodes, and even if the material for the gate wirings cannot be micro-processed, the material used for the wirings has low resistance. Of course, the gate electrodes and the gate wirings may also be formed from the same material.

[0109] Further, the gate electrodes may be formed from a single layer conductive film, and when necessary, it is preferable to use a two layer or a three layer lamination film. All known conductive films can be used as the material for the gate electrodes. However, as stated above, it is preferable to use a material which can be micro-processed, specifically, a material which can be patterned to a line width of 2 m or less.

[0110] Typically, it is possible to use a film made of an element selected from the group consisting of tantalum (Ta), titanium (Ti), molybdenum (Mo), tungsten (W), chromium

(Cr), and silicon (Si), or a nitride film containing the above elements (typically a tantalum nitride film, tungsten nitride film, or a titanium nitride film), or an alloy film having a combination of the above elements (typically Mo-W alloy, Mo-Ta alloy), or a silicide film of the above elements (typically a tungsten silicide film or a titanium silicide film). Of course, the films may be used as a single layer or a laminate layer.

[0111] A lamination film that is composed of a 50 nm thick tantalum nitride (TaN) film and a 350 nm thick tantalum (Ta) film is used in Embodiment 2. These films may be formed by sputtering. Further, when an inert gas such as Xe, Ne or the like is added as a sputtering gas, peeling of the films due to stress can be prevented.

[0112] At this point, the gate electrode **312** is formed so as to overlap a portion of the n-type impurity region **305** and sandwiching the gate insulating film **310**. This overlapping portion later becomes an LDD region overlapping the gate electrode. Note that in a cross-sectional view, the gate electrodes **313** and **314** can be seen as two electrodes, but they are actually electrically connected.

[0113] Next, an n-type impurity element (phosphorous is used in Embodiment 2) is doped in a self-aligning manner using the gate electrodes **311** to **315** as masks as shown in **FIG. 5A**. The doping of phosphorous is regulated so that it can be doped into the impurity regions **316** to **323** thus formed at a concentration of 1/10 to 1/2 that of the impurity regions **305** and **306** (typically between 1/4 and 1/3). Specifically, a concentration of 1×10^{16} to 5×10^{18} atoms/cm^3 (typically 3×10^{17} to 3×10^{18} atoms/cm^3) is preferable.

[0114] As shown in **FIG. 5**B, resist masks **324***a* to **324***d* are formed next covering the gate electrodes and the like, and an n-type impurity element (phosphorous is used in Embodiment 2) is doped to thereby form impurity regions **325** to **329** containing a high concentration of phosphorous. Ion doping using phosphine (PH_3) is also performed here, and the concentration of phosphorous in these regions is regulated so that it is between 1×10^{20} and 1×10^{21} atoms/cm^3 (typically between 2×10^{20} and 5×10^{21} atoms/cm^3).

[0115] A source region or a drain region of the N channel TFT is formed through this process, and in the switching TFT, a portion of the n-type impurity regions **319** to **321** formed through the process of **FIG. 5A** remains. These remaining regions correspond to the LDD regions **15***a* to **15***d* of the switching TFT in **FIG. 5**.

[0116] Next, as shown in **FIG. 5**C, the resist masks **324***a* to **324***d* are removed, and a new resist mask **332** is formed. A p-type impurity element (boron is used in Embodiment 2) is then doped to thereby form impurity regions **333** and **336** containing a high concentration of boron. Boron is doped here by ion doping using diborane (B_2H_6) so that the concentration thereof is 3×10^{20} to 3×10^{21} atoms/cm^3 (typically between 5×10^{20} and 1×10^{21} atoms/cm^3).

[0117] Note that phosphorous has already been doped into the impurity regions **333** to **336** at a concentration of 1×10^{20} to 1×10^{21} atoms/cm^3, but boron is doped here at a concentration of at least 3 times higher than that of phosphorous. Therefore, the n-type impurity regions that have been formed in advance are completely inverted to p-type conductivity, and function as p-type impurity regions.

[0118] Next, after removing the resist mask **332**, the n-type and p-type impurity elements doped at respective concentrations are activated. Furnace annealing, laser annealing, or lamp annealing may be performed as a means of activation. Heat treatment is performed in Embodiment 1 under a nitrogen atmosphere for 4 hours at 550° C. in an electric furnace.

[0119] It is important to remove as much as possible the oxygen contained in the atmosphere at this point. This is because if any small traces of oxygen exists, then the exposed surface of the electrode are oxidized, inviting an increase in resistance, and at the same time, it becomes more difficult to make an ohmic contact later. It is therefore preferable that the concentration of oxygen in the processing environment in the above activation process is set to 1 ppm or less, desirably 0.1 ppm or less.

[0120] After the activation process is completed, a gate wiring **337** is formed next to a thickness of 300 nm as shown in **FIG. 5D**. A metallic film having aluminum (Al) or copper (Cu) as its principal component (occupying 50 to 100% as a composition) may be used as the material of the gate wiring **337**. Regarding the placement of the gate wiring **337**, it is formed so that the gate wiring **211** and the gate electrodes **19***a* and **19***b* of the switching TFT (corresponding to gate electrodes **313** and **314** of **FIG. 4E**) are electrically connected as in **FIG. 3**.

[0121] The wiring resistance of the gate wiring can be made extremely small by forming such type of structure, and therefore a pixel display region (pixel portion) having a large surface area can be formed. That is, the pixel structure of Embodiment 1 is extremely effective because a self-light emitting device having a screen size of a 10 inch diagonal or larger (in addition, a 30 inch or larger diagonal) is realized due to this structure.

[0122] Next, as shown in **FIG. 6A, a** first interlayer insulating film **338** is formed. As the first interlayer insulating film **336**, either a single layer insulating film containing silicon is used, or a lamination film in which 2 or more types of insulating film containing silicon are combined may be used. Further, it is appropriate to set the film thickness thereof between 400 nm and 1.5 μm. A structure in which an 800 nm thick silicon oxide film is formed laminated on a 200 nm thick silicon oxide nitride film is used in Embodiment 2.

[0123] Additional heat treatment is performed under an atmosphere containing 3% to 100% of hydrogen for 1 to 12 hours at a temperature of between 300° C. and 450° C. to thereby perform hydrogenation. This process is one for terminating the dangling bonds in the semiconductor film caused by thermally excited hydrogen. Plasma hydrogenation (using hydrogen excited by a plasma) may be performed as another means of hydrogenation.

[0124] Note that the hydrogenation step may also be inserted between the step of forming of the first interlayer insulating film **338**. That is, hydrogenation processing such as the one above may be performed after forming the 200 nm thick silicon oxide nitride film, and then the remaining 800 nm thick silicon oxide film may be formed thereafter.

[0125] Next, a contact hole is formed in the first interlayer insulating film **338** and the gate insulating film **310** to thereby form source wirings **339** to **342** and drain wirings **343** to **345**. It is to be noted that in Embodiment 2, this

electrode is made of a lamination film of a three layer structure in which a titanium film having a thickness of 100 nm, an aluminum film containing titanium and having a thickness of 300 nm, and a titanium film having a thickness of 150 nm are formed in succession by sputtering. Of course, other conductive films may be used.

[0126] Next, a first passivation film **346** is formed to a thickness of 50 to 500 nm (typically between 200 and 300 nm). A 300 nm thick silicon oxide nitride film is used as the first passivation film **346** in Embodiment 2. This may also be substituted with a silicon nitride film.

[0127] Note that it is effective to perform plasma process using a gas containing hydrogen such as H_2 or NH_3 prior to the formation of the silicon oxide nitride film. Hydrogen activated by this preprocess is supplied to the first interlayer insulating film **338**, and the film quality of the first passivation film **346** is improved by performing heat treatment. At the same time, the hydrogen added to the first interlayer insulating film **338** diffuses to the lower layer side, and therefore the active layers can be effectively hydrogenated.

[0128] Next, as shown in **FIG. 6B, a** second interlayer insulating film **347** made of an organic resin is formed. As the organic resin, materials such as polyimide, polyamide, acrylic resin, or BCB (benzocyclobutene) can be used. In particular, because the second interlayer insulating film **347** is primarily used for leveling, acrylic resin that has excellent leveling properties is preferable. In Embodiment 2, an acrylic resin film is formed to a thickness sufficient to level a step difference formed by TFTs. A preferred film thickness thereof is between 1 to 5 μm (more preferably between 2 and 4 μm).

[0129] A contact hole is formed in the second interlayer insulating film **347** and the first passivation film **346** to thereby form a pixel electrode **348** to be electrically connected to the drain wiring **345**. In Embodiment 2, an indium tin oxide (ITO) film is formed to a thickness of 110 nm, and patterning is carried out to thereby form the pixel electrode. Incidentally, as other materials, it is also possible to use a compound in which 2 to 20% of zinc oxide (ZnO) is mixed in indium oxide or a compound constituting zinc oxide and gallium oxide may be used as a transparent electrode. The pixel electrode **348** becomes the anode of the EL element.

[0130] As shown in **FIG. 6C, a** bank **349** of a resin material is formed next. The bank **349** may be formed of an acrylic resin film or a polyimide film, which has a total film thickness of between 1 to 2 μm, with patterning. The bank **349** is formed in stripe shapes between the rows of pixels as shown in **FIG. 6C**. In Embodiment 2, the bank **349** is formed along the source wiring **341**, but it may be formed along the gate wiring **337**.

[0131] An EL layer **350** is formed next using the electric field application method explained with reference to **FIG. 1C**. It is to be noted that although only one pixel is shown here, the EL layers corresponding to the respective colors R (red), G (green), and B (blue) are formed as explained in Embodiment 1.

[0132] First, the application liquid for forming the EL layer provided in the material chamber is atomized with ultrasonic oscillation by the ultrasonic oscillator. When the atomized application liquid for forming the EL layer is charged by an electric field imparted by a voltage that is applied to the electrode, then the application liquid can be extracted by a leading electrode that is attached to the exterior of the material chamber. After the extracted EL layer application liquid is accelerated by the accelerating electrode in a flying direction, the application liquid is then controlled by the controlling electrode to thereby be applied on the desired position on the substrate **110**.

[0133] In the present invention, first, an application liquid for a red color EL layer is extracted from the material chamber as an atomized application liquid for forming the EL layer by the leading electrode. Then, after being accelerated by the accelerating electrode, the application liquid is controlled by the controlling electrode to thereby form an EL layer on the rows of pixels to luminesce a red color. Next, after moving the substrate in the lateral direction, the application liquid for forming the green color EL layer from the material chamber is applied to thereby form rows of pixels to luminesce the green color. The substrate is then further moved in the lateral direction so that the application liquid for forming the blue color EL layer from the material chamber is applied to thereby form rows of pixels to luminesce the blue color.

[0134] A three-colored stripe shaped EL layer is thus formed by sequentially applying the application liquid to the rows of pixels to luminesce each of the colors red, green, and blue while moving the substrate. It is to be noted that although only one pixel is shown in Embodiment 2, the EL layers to luminesce the same color may be formed one row at a time or all at the same time. Further, when necessary, a mask may be provided between the material chamber and the substrate to thereby control the application position of the application liquid by applying electric field to the mask.

[0135] As an EL material, a cyano-polyphenylene vinylene may be used for the EL layer to luminesce a red color; a polyphenylene vinylene for the EL layer to luminesce a green color; and a polyphenylene vinylene or a polyalkylphenylene for the EL layer to luminesce a blue color in Embodiment 2. An appropriate film thickness thereof is 30 to 150 nm (preferably between 40 and 100 nm).

[0136] A known material may be used to form the EL layer **350**. Taking the driving voltage into consideration, it is preferable that an organic material is used. It is to be noted that, in Embodiment 2, the EL layer **350** is formed from the above EL material, that is, it takes a single layer structure of a light emitting layer only. However, an electron injecting layer, an electron transporting layer, a hole transporting layer, a hole injecting layer, an electron preventing layer, or a hole element layer may be provided if necessary. Although the MgAg electrode is used as the cathode **351** of the EL element in Embodiment 2, other well-known materials may be used.

[0137] The electric field application method controlled by an electric field has been shown here in Embodiment 2. However, other methods such as the ink jet method or a method in which the material for the EL layer is controlled and applied as charged particles may also be employed.

[0138] Note that although the light emitting layer is applied and formed each color, in the case of forming the electron injecting layer, the electron transporting layer, the hole transporting layer, the hole injecting layer, the electron preventing layer, or the hole element layer, the layers made

of the different material may all be formed at once by using methods such as the spin coating method and the application method.

[0139] A cathode (MgAg electrode) **351** is formed by vacuum evaporation after the formation of the EL layer **350**. It is to be noted that the film thickness of the EL layer **350** may appropriately be between 80 and 200 nm (typically between 100 and 120 nm) and the thickness of the cathode **351** between 180 and 300 nm (typically between 200 and 250 nm).

[0140] A protective electrode **352** is further provided on the cathode **351**. A conductive film containing aluminum as its main constituent may be used as the protective electrode **352**. The protective electrode **352** may be formed by vacuum evaporation using a mask. Note that the state of the substrate with the protective electrode formed on the top is referred as an active matrix substrate throughout the present specification.

[0141] A barrier layer **353** is further formed thereon so that the active matrix substrate that is completed up to the formation of the protective electrode **352** is not exposed to the open air. In Embodiment 2, tantalum oxide is used as the material for forming the barrier layer **353**. However, an inorganic material such as a silicon nitride, an aluminum nitride, or a carbon, specifically a DLC, may be used. The barrier layer **353** is formed by employing sputtering in Embodiment 2, although a film deposition method performed at room temperature such as plasma CVD can also be employed.

[0142] After forming the barrier layer **353**, a cover layer **354** made of an organic resin is formed on the barrier layer **353**. Note that, after dissolving the organic resin in a solvent and moderately regulating the viscosity of the organic resin itself to thereby manufacture an organic resin liquid, the organic resin liquid is then provided in the material chamber and applied by the electric field application method, thereby forming the cover layer **354**. It is preferable that the viscosity of the organic resin liquid at this point is between 1×10^{-3} and 3×10^{-2} Pa·s.

[0143] Further, at this point, the addition of an absorbent or an anti-oxidant such as barium oxide inside the organic resin liquid for forming the cover layer is effective in preventing moisture and oxygen, which are the degrading factors of the EL element, from penetrating into the EL element.

[0144] In the case of Embodiment 2, as shown in **FIG. 6**C, the active layer of the N channel TFT **205** includes a source region **355**, a drain region **356**, an LDD region **357** and a channel formation region **358**, and the LDD region **357** overlaps with the gate electrode **312** through the gate insulating film **310** sandwiched therebetween.

[0145] The reason for forming the LDD region only at the side of the drain region resides in the consideration of not dropping the operating speed. Further, it is not necessary to pay very much attention to the OFF current value in the N channel TFT **205**, but rather, it is better to place importance on the operating speed. Accordingly, it is desirable that the LDD region **357** is made to completely overlap with the gate electrode to reduce the resistitive component to a minimum. That is, it is preferable to remove the so-called offset.

[0146] In the active matrix substrate of Embodiment 2, a TFT of an optimum structure is not only provided in the pixel portion but also in the driver circuit portion. Therefore, very high reliability is attained and operating characteristics are improved.

[0147] First, a TFT with a structure that can reduce hot carrier injection so as not to drop the operating speed thereof as much as possible is used as the N channel TFT **205** of a CMOS circuit forming the driver circuit portion. Incidentally, the driver circuit here includes a shift register, a buffer, a level shifter, a sampling circuit (sample and hold circuit) and the like. In the case of performing digital driving, a signal conversion circuit such as a D/A converter is also included therein.

[0148] Next, the cross-sectional structure of an N channel switching TFT as the TFT of the pixel portion will be explained with reference to **FIGS. 7A and 7B**. Note that the reference numerals used here correspond to those of **FIG. 2**.

[0149] First, in the structure thereof shown in **FIG. 7**A, the LDD regions **15***a* to **15***b* are provided so as not to overlap with the gate electrodes **19***a* and **19***b* through the gate insulating film **18** sandwiched therebetween. Such structure is very effective in lowering the OFF current value.

[0150] On the other hand, in the structure thereof shown in **FIG. 7**B, the LDD regions **15***a* to **15***d* are not provided. In the case of adopting the structure of **FIG. 7**B, productivity can be improved because the number of processes can be reduced when compared with case of forming the structure of **FIG. 7A**.

[0151] In the present invention, a TFT may take either of the structures shown in **FIGS. 7A and 7B** as the switching TFT.

[0152] Next, the cross-sectional structure views of an N channel current controlling TFT as the TFT of the pixel portion are illustrated in **FIGS. 8A and 8B**. Note that the reference numerals used here correspond to those of **FIG. 2**.

[0153] In the current controlling TFT shown in **FIG. 8**A, the LDD region **33** is provided between the drain region **32** and the channel forming region **34**. The structure of the current controlling TFT shown here has a region where the LDD region **33** overlaps with the gate electrode **35** through the gate insulating film **18** sandwiched therebetween and a region where the LDD region **33** does not overlap with the gate electrode **35**. However, as shown in **FIG. 8**B, the LDD region **33** need not be provided in the structure thereof.

[0154] The current controlling TFT supplies a current for making the EL element to emit light, and at the same time controls the supply amount to enable gradation display. Thus, it is necessary to take a countermeasure against deterioration due to the hot carrier injection so that deterioration does not occur even when a current is supplied.

[0155] Against deterioration caused by the hot carrier injection, it is known that a structure in which the LDD region overlaps with the gate electrode is very effective. Therefore, although the structure in which the LDD region is provided overlapping with the gate electrode **35** through the gate insulating film **18** sandwiched therebetween as shown in **FIG. 8A** is appropriate, as a countermeasure against the OFF current value, the LDD region provided so as not to overlap with the gate electrode is shown in the

structure here. However, an LDD region not overlapping the gate electrode does not have to be necessarily provided. In addition, the LDD regions do not have to be provided in the structure as shown in **FIG. 8B** depending on the situation.

[**0156**] In the structures of the TFT shown in **FIGS. 5A and 8B**, when a voltage V_{DS} that is applied to the TFT is 10 V or more, then the structure shown in **FIG. 8A** is preferable. On the other hand, when the voltage V_{DS} that is applied to the TFT is less than 10 V, then the structure shown in **FIG. 8B** is preferable.

[**0157**] Note that, after forming the cover layer **354** as shown in **FIG. 6**C and enhancing the airtightness, a connecter (flexible printed circuit: FPC) for connecting the element formed on the insulating body or a terminal led out from the circuit to an external signal terminal is attached, whereby the self-light emitting device is completed as a product. In the present specification, the product completed to such a state to be shipped is called the self-light emitting device (or an EL module).

[**0158**] The EL module of Embodiment 2 that has been formed up to the cover layer is explained here with reference to **FIGS. 9A and 9B**.

[**0159**] The active matrix type self-light emitting device of Embodiment 2 includes a pixel portion **902**, a gate side driver circuit **903**, and a source side driver circuit **904** formed on a glass substrate **901**. A switching TFT **905** of the pixel portion is an N channel TFT and is disposed at an intersection of a gate wiring line **906** that is connected to the gate side driver circuit **903** and a source wiring line **907** that is connected to the source side driver circuit **904**. Further, a drain of the switching TFT **905** is connected to a gate of a current controlling TFT **908**.

[**0160**] Further, a source side of the current controlling TFT **908** is connected to a power source supply line **909**. In the structure such as Embodiment 2, a ground electric potential (earth electric potential) is imparted to the power source supply line **909**. An EL element **910** is connected to the drain of the current controlling TFT **908**. Further, a predetermined voltage (3 to 12 V, preferably 3 to 5 V) is applied to the anode of the EL element **910**.

[**0161**] Connecting wirings **912** and **913** for transmitting signals to the driver circuit portions and a connecting wiring line **914** connected to the power source supply line **909** are provided in an FPC **911** serving as an external input/output terminal.

[**0162**] Here, shown in **FIG. 9B** is a sectional view corresponding to the cross-section taken along the line A-A' of **FIG. 9A**. Note that, in **FIGS. 9A and 9B**, the same reference numerals are used to denote the same components, and in a portion thereof, the same reference numerals are used to denote the same components of **FIG. 6**.

[**0163**] As shown in **FIG. 9**B, the pixel portion **902** and the gate side driver circuit **903** are formed on the glass substrate **901**. The pixel portion **902** is composed of a plurality of pixels each including the current controlling TFT **202** and the pixel electrode **348** that is electrically connected to the current controlling TFT **202**. The gate side driver circuit **903** is formed using a CMOS circuit in which the N channel TFT **205** and the P channel TFT **206** are combined complementarity.

[**0164**] The pixel electrode **348** functions as an anode of the EL element. The bank **349** is formed in the gap of the pixel electrode **348** to thereby form the EL layer **350** on the inner side of the bank **349**. The cathode **351** and the protective electrode **352** are further formed thereon. It is to be noted that the structure of the EL element is not necessarily limited to the structure shown in Embodiment 2, but the structure of the EL element may be inverted and the pixel electrode may function as the cathode.

[**0165**] In the case of Embodiment 2, the protective electrode **352** also functions as a common wiring shared by all pixel rows, and is electrically connected to the FPC **911** via the connecting wiring **912**. All of the elements contained in the pixel portion **902** and in the gate side driver circuit **903** are covered with the barrier layer that is made of an inorganic material such as silicon nitride, tantalum oxide, or carbon (specifically a DLC film). Although it is possible to omit the barrier layer **353**, the provision of the barrier layer **353** is preferred in terms of shielding the respective elements from the outside.

[**0166**] Next, a cover layer **916** is provided on the barrier layer so as to cover the EL element. As the cover layer **916**, PVC (polyvinyl chloride), epoxy resin, silicone resin, acrylic resin, PVB (polyvinyl butylal), or EVA (ethylenevinyl acetate) may be used. An absorbent (not shown) placed inside the cover layer **916** keeps moisture absorbing effect, which is preferable.

[**0167**] A protecting substrate that is made of glass, plastic, and ceramic can be provided on the cover layer **916**. In addition, the structure may be one in which the protecting substrate (not shown in the figure) is bonded to the active matrix substrate by using the cover layer **916**.

[**0168**] By providing the barrier layer **353** and the cover layer **916** on the EL element **910** using the method as described above, the EL element **910** may be completely cut off from the external environment and the invasion from the outside by substances that accelerate the oxidation degradation of the EL layer, such as moisture and oxygen, can thus be prevented. Accordingly, a self-light emitting device with high reliability can be manufactured.

[**0169**] An example of a circuit configuration of the self-light emitting device shown in **FIG. 9** is illustrated in **FIG. 10**. The self-light emitting device of Embodiment 2 includes a source side driver circuit **1001**, a gate side driver circuit (A) **1007**, a gate side driver circuit (B) **1011**, and a pixel portion **1006**. Note that, in the present specification, the term "driver circuit portion" is a generic term including the source side processing circuit and the gate side driver circuit.

[**0170**] The source side driver circuit **1001** is provided with a shift register **1002**, a level shifter **1003**, a buffer **1004**, and a sampling circuit (sample and hold circuit) **1005**. Further, the gate side driver circuit (A) **1007** is provided with a shift register **1008**, a level shifter **1009**, and a buffer **1010**. The gate side driver circuit (B) **1011** also takes the same structure.

[**0171**] Here, the shift registers **1002** and **1008** have driving voltages of 5 to 16 V (typically 10 V), respectively, and the structure indicated by the reference numeral **205** in **FIG. 6C** is suitable for the N channel TFT that is used in a CMOS circuit for forming the circuits.

[0172] Besides, the CMOS circuit including the N channel TFT **205** in **FIG. 6C** is suitable for each of the level shifters **1003** and **1009** and the buffers **1004** and **1010**, similarly to the shift register. Incidentally, the gate wiring with multi-gate structure such as a double gate structure or a triple gate structure is effective in improving the reliability of each circuit. The pixel with the structure illustrated in **FIG. 2** is arranged in the pixel portion **1006**.

[0173] The foregoing structure can be easily realized by manufacturing TFTs in accordance with the manufacturing steps shown in **FIGS. 4A** to **6**C. In Embodiment 2, although only the structure of the pixel portion and the driver circuit portion is shown, it is possible to form not only the driver circuit, but also a logical circuit such as a signal dividing circuit, a D/A converter circuit, an operational amplifier circuit, a a-correction circuit on the same insulating body if the manufacturing steps of the circuits are carried out in accordance with those of Embodiment 2. In addition, it is believed that a memory portion, a microprocessor, or the like can be formed.

[0174] The constitution of Embodiment 2 can be freely combined with the constitution of Embodiment 1.

[0175] [Embodiment 3]

[0176] A method of manufacturing a lamination structure that is different from the one shown in **FIG. 1B** will be explained in Embodiment 3. In **FIG. 11, a** current controlling TFT **1101** is formed on a substrate **1100**, and a pixel electrode **1102** electrically connected to the current controlling TFT **1101** is formed as illustrated in the drawing. In Embodiment 3, an EL layer **1103** is formed on the pixel electrode **1102** using the ink jet method. Note that it is appropriate to use the same material used in Embodiment 1 for the application liquid for the EL layer.

[0177] Provided on the EL layer **1103** is a cathode **1104** formed using the evaporation method. Note that it is appropriate to use a material that has a small work function, such as MgAg and Al—Li, for forming the cathode **1104**. After forming the cathode **1104**, the ink jet method is again used to form a cover layer **1105** made of an organic resin film evenly on the pixel portion. Preferably, the film thickness of the cover layer **1105** formed is between 10 nm and 300 nm.

[0178] As a material for forming the cover layer **1105** made of an organic resin, it is appropriate to use a material that has a high degree of hardness, is unlikely to allows substances such as moisture and oxygen to permeate, and has planarity. To be more specific, organic resins such as epoxy resin, acrylic resin, polyimide, polyamide, and silicon resin are preferable. Because the cover layer **1105** is formed using the ink jet method, it can be selectively formed on the pixel portion.

[0179] Shown in **FIG. 12** is the method of forming a cover layer **1202** on a pixel portion **1201** on an active matrix substrate **1200** by using the ink jet method. Note that, the application liquid for forming the EL layer and the organic resin liquid for forming the cover layer are discharged from a head **1203** in the structure shown here. Note that in the Piezo method known for the ink jet method, there are types, one being the MLP (Multi Layer Piezo) type and the other being the MLChip (Multi Layer Ceramic Hyper Integrated Piezo Segments) type. The head **1203** shown here is one called On Demand Piezo Driver MLChip method that is manufactured by Seiko-Epson Corp.

[0180] The MLChip is an actuator composed of an oscillation plate **1204** made of ceramic, a communicating plate **1205**, and a material chamber plate **1206** that forms the material chamber **1207**, and piezo elements **1208** are formed on the vibrator plate **1204** in correspondence with each of the material chambers.

[0181] Then, in the MLChip, three stainless plates (SUS plate) are laminated to form a supply hole **1209**, a reserver **1210**, and a nozzle **1211** which thereby form a head **1203**. It is to be noted **FIG. 12** shows a state where two nozzles **1211** are provided. However, the number of nozzles is not limited thereto, but one nozzle may be provided or three or more may be provided depending on the region to be applied and the application liquid.

[0182] The operating principle of the application device fabricated from this MLChip is that when a voltage is applied to a top electrode **1212** and a bottom electrode **1213**, the piezo elements **1208** vibrate to thereby cause a piezoelectric effect of the piezo elements **1208** and the vibrator plate **1204**, that is, a bending vibration. In other words, pressure is applied to the material chamber **1207** by this bending vibration, whereby the organic resin liquid provided in the material chamber **1207** is pushed out and then applied.

[0183] As shown in **FIG. 11**, after the formation of the cover layer **1105**, a barrier layer **1106** is formed by sputtering to cover the cover layer **1105**. In Embodiment 3, the barrier layer **1106** is formed of a carbon film, specifically a DLC (Diamond Like Carbon) film. However, the material for forming the barrier layer **1106** is not necessarily limited thereto, but materials such as tantalum oxide, aluminum nitride, or silicon nitride may also be used. It is note that the barrier layer **1106** is formed selectively using a shadow mask.

[0184] Thus, by forming the cover layer **1105** and the barrier layer **1106** on the active matrix substrate, the invasion of degrading factors to the EL element, such as moisture and oxygen, from the outside can be prevented.

[0185] [Embodiment 4]

[0186] A case of employing the present invention in a passive type (simple matrix type) self-light emitting device is explained in Embodiment 4 with reference to **FIG. 13**. In **FIG. 13**, reference numeral **1301** denotes a substrate made of plastic and **1302** denotes an anode made of a transparent conductive film. A compound of indium oxide and zinc oxide is formed by sputtering as the anode **1302** in Embodiment 4. Note that, although not shown in **FIG. 13, a** plural number of lines of anodes **1302** are arranged in stripe shapes in a parallel direction with the defined space.

[0187] Further, cathodes **1306** arranged in stripe shapes are formed in a perpendicular direction on the defined space. Banks **1303** are formed so as to fill up the spaces between the cathodes **1306**.

[0188] Subsequently, EL layers **1304***a* to **1304***c* made of an EL material are formed by using the electric field application method described in Embodiment 1. Note that, reference numeral **1304***a* denotes an EL layer luminescing a red color, **1304***b* denotes an EL layer luminescing a green color, and **1304***c* denotes an EL layer luminescing a blue

color. An EL material used in Embodiment 1 may be used similarly in Embodiment 4. Since these EL layers are formed along the grooves which are formed by the banks **1303**, these layers are arranged in stripe shapes in a perpendicular direction on the defined space.

[**0189**] By implementing the present embodiment, pixels of three colors, red, green, and blue, are formed on the substrate in stripe shapes. It should be noted that the pixels need not to have three colors, but may have one or two colors. In addition, the colors are not limited to red, green, and blue, but other colors such as yellow, orange and gray may be used.

[**0190**] First, the application liquid for forming a red color EL layer is prepared in the material chamber. The application liquid is then extracted by an electric field generated by an electrode provided on the exterior of the material chamber. The extracted application liquid for the EL layer is controlled by electric field, whereby it reaches the desired pixel portion. The EL layer is thus formed.

[**0191**] The application liquid for the red color EL layer is first applied. Because the application liquid is controlled by the electric field, the application liquid for the EL layer can be selectively applied onto the desired position of the pixel portion. Note that it is appropriate to apply the application liquid while moving the nozzle in the direction of forming one row of pixels.

[**0192**] Subsequently, after moving the nozzle to the adjacent row of pixels so that an application can be performed, the application liquid for the green color EL layer is applied. After further moving the nozzle to the next adjacent row of pixels, the application liquid for the blue color EL layer is applied to thereby form stripe shape EL layers of red, green, and blue in the pixel portion.

[**0193**] By repeating the above operation, stripe shape pixels can be formed in the pixel portion as shown in **FIG. 13**. Note that light emitting layers luminescing the same color may be formed one at a time or all at the same time.

[**0194**] Although the EL layer here denotes an EL layer of a single structure composed of only the light emitting layer, other layers formed from an organic EL material that contributes to the emission of light, such as an electric charge injection layer and an electric charge transporting layer, may also be used. There are cases where a single layer of the light emitting layer is adopted. However, for example, in the case of adopting a lamination layer composed of the hole injection layer and the light emitting layer, the lamination film is referred as an EL layer.

[**0195**] At this point, it is preferable that a mutual distance (D) of adjacent pixels of the same color in a line is set to 5 times or more (preferably 10 times or more) higher than the film thickness (t) of the EL layer. This is because a problem of cross-talk will occur between the pixels if $D<5t$. It should be noted if the distance (D) is too far apart from each other, then highly fine images can not be attained. Therefore, setting the distance (D) to $5t<D<50t$ (preferably $10t<D<35t$) is preferable.

[**0196**] Further, it is possible to form the bank in a stripe shape in the horizontal direction to thereby form the EL layer luminescing a red color, the EL layer luminescing a green color, and the EL layer luminescing a blue color in the horizontal direction. At this point, the bank is formed above the gate wiring through the insulating film and along the gate wiring.

[**0197**] In this case, similarly, it is appropriate to set the mutual distance (D) of adjacent pixels of the same color in a line to 5 times or more (preferably 10 times or more) higher than the film thickness (t) of the EL layer, and more preferably to $5t<D<50t$ (preferably $10t<D<35t$).

[**0198**] Thus, the application liquid for the EL layer is controlled by an electric field to thereby form the EL layer, resulting in making it possible to control the application position.

[**0199**] Thereafter, although not shown in **FIG. 13**, the cathodes and protective electrodes are arranged in stripe shapes so as to be orthogonal to the anodes **1302** and so that the perpendicular direction of a plural number of lines of cathodes and protective electrodes on the defined space become the longitudinal direction. Note that the cathode **1305** is made from MgAg and the protective electrode **1306** is made from an aluminum alloy film, and the both are respectively formed by evaporation in Embodiment 4. Furthermore, a wiring, not shown in the drawing, is drawn to a portion where an FPC will be attached later so that a predetermined voltage can be applied to the protective electrode **1306**.

[**0200**] An EL element is thus formed on the substrate **1301**. Note that since a lower side electrode serves as a transmissive anode in Embodiment 4, light generated by the EL layers **1304***a* to **1304***c* is irradiated to a lower surface (substrate **1301**). However, the lower side electrode can serve as a light shielding cathode by reversing the structure of the EL element. In that case, light generated by the EL layers **1304***a* to **1304***c* is irradiated to an upper surface (the side opposite the substrate **1301**).

[**0201**] After the formation of the protective electrode **1306**, a barrier layer **1307** made of an inorganic material is formed. It is appropriate here to use inorganic materials such as silicon nitride, tantalum oxide, aluminum nitride, or carbon (specifically a DLC film). The barrier layer can be formed by plasma CVD, sputtering, or evaporation. A silicon nitride film is formed by sputtering as the barrier layer **1307** in Embodiment 4. At this point, a preferable film thickness of the barrier layer **1307** is between 10 nm and 100 nm.

[**0202**] A cover layer **1308** made of an organic resin film is subsequently formed by the same method used for forming the EL layer. Note that it is appropriate to use materials such as polyamide and polyimide as the organic resin used here. Further, barium oxide may be doped into the organic resin film as an absorbent (not shown in the figure). Finally, an FPC **1310** is attached via an anisotropic conductive film **1309**, thereby completing the passive type self-light emitting device.

[**0203**] The passive type self-light emitting device shown in **FIG. 13** has a structure in which the barrier layer **1307** is formed on the EL element over the substrate, and the cover layer **1308** is formed on the barrier **1307**. However, as shown in **FIG. 14**, the structure in which a barrier layer **1408** is formed after forming a cover layer **1407** may be adopted.

[**0204**] It is to be noted that the constitution of Embodiment 4 may be implemented freely combining with any one of the constitutions of Embodiments 1 to 3.

[0205] [Embodiment 5]

[0206] In the present invention, it is effective to use a DLC (Diamond Like Carbon) film made of carbon as the barrier layer. However, if the film thickness thereof is too thick, transmissivity will drop, and therefore it is preferable to form the film thickness thereof to 50 nm or less (preferably between 10 and 20 nm).

[0207] A characteristic of the DLC film is that it has a Raman spectrum distribution with a asymmetric peak of about 1550 cm^{-1} and a shoulder of about 1300 cm^{-1}. In addition, the DLC film shows a hardness of 15 to 25 Gpa when measured using a microhardness meter and has a characteristic that it is superior to chemical resistance. Therefore, it is effective to form such DLC film on the EL element or on the cover layer on the EL element. In any case, appropriately, the DLC film may be formed by using methods such as sputtering, ECR plasma CVD, high frequency plasma CVD, or ion beam evaporation.

[0208] It is to be noted that the constitution of Embodiment 5 may be implemented freely combining with any one of the constitutions of Embodiments 1 to 4.

[0209] [Embodiment 6]

[0210] When the present invention is implemented to manufacture an active matrix self-light emitting display device, it is effective to use a silicon substrate (silicon wafer) as a substrate. In the case of using the silicon substrate as the substrate, a manufacturing technique of MOSFET utilized in the conventional IC, LSI or the like can be employed to manufacture a switching element and a current control element to be formed in the pixel portion, or a driver element to be formed in the driver circuit portion.

[0211] The MOSFET can form circuits having extremely small variations as achievements in the IC and the LSI. Particularly, it is effective for the active matrix EL display device with an analog driver of performing gradation display by an electric current value.

[0212] It is to be noted that the silicon substrate is not transmissive, and therefore the structure needs to be constructed so that light from the EL layer is irradiated to a side opposite the substrate. The structure of the EL display device of Embodiment 5 is similar to that of **FIG. 9**. However, the difference is that the MOSFET is used for forming a pixel portion **902** and a driver circuit portion **903** instead of a TFT.

[0213] Note that it is possible to implement the structure of Embodiment 5 freely combining it with the structure of any of Embodiments 1 to 5.

[0214] [Embodiment 7]

[0215] The self-emission device fabricated in accordance with the present invention is of the self-emission type, and thus exhibits more excellent recognizability of the displayed image in a light place as compared to the liquid crystal display device. Furthermore, the self-emission device has a wider viewing angle. Accordingly, the self-emission device can be applied to a display portion in various electronic devices. For example, in order to view a TV program or the like on a large-sized screen, the EL display device in accordance with the present invention can be used as a display portion of an EL display (i.e., a display in which a self-emission device is installed into a frame) having a diagonal size of 30 inches or larger (typically 40 inches or larger.)

[0216] The EL display includes all kinds of displays to be used for displaying information, such as a display for a personal computer, a display for receiving a TV broadcasting program, a display for advertisement display. Moreover, the self-emission device in accordance with the present invention can be used as a display portion of other various electric devices.

[0217] Such electronic devices include a video camera, a digital camera, a goggles-type display (head mount display), a navigation system, a sound reproduction device (a car audio equipment and an audio set), note-size personal computer, a game machine, a portable information terminal (a mobile computer, a portable telephone, a portable game machine, an electronic book, or the like), an image reproduction apparatus including a recording medium (more specifically, an apparatus which can reproduce a recording medium such as a digital video disc (DVD) and so forth, and includes a display for displaying the reproduced image), or the like. In particular, in the case of the portable information terminal, use of the self-emission device is preferable, since the portable information terminal that is likely to be viewed from a tilted direction is often required to have a wide viewing angle. **FIGS. 15A** to **16**B respectively show various specific examples of such electronic devices.

[0218] **FIG. 15A** illustrates an EL display which includes a frame **2001**, a support table **2002**, a display portion **2003**, or the like. The present invention is applicable to the display portion **2003**. The EL display is of the self-emission type and therefore requires no back light. Thus, the display portion thereof can have a thickness thinner than that of the liquid crystal display device.

[0219] **FIG. 15B** illustrates a video camera which includes a main body **2101**, a display portion **2102**, an audio input portion **2103**, operation switches **2104**, a battery **2105**, an image receiving portion **2106**, or the like. The self-emission device in accordance with the present invention can be used as the display portion **2102**.

[0220] **FIG. 15C** illustrates a portion (the right-half piece) of an EL display of head mount type, which includes a main body **2201**, signal cables **2202**, a head mount band **2203**, a display portion **2204**, an optical system **2205**, a self-emission device **2206**, or the like. The present invention is applicable to the self-emission device **2206**.

[0221] **FIG. 15D** illustrates an image reproduction apparatus including a recording medium (more specifically, a DVD reproduction apparatus), which includes a main body **2301**, a recording medium (a DVD or the like) **2302**, operation switches **2303**, a display portion (a) **2304**, another display portion (b) **2305**, or the like. The display portion (a) is used mainly for displaying image information, while the display portion (b) is used mainly for displaying character information. The self-emission device in accordance with the present invention can be used as these display portions (a) and (b). The image reproduction apparatus including a recording medium further includes a game machine or the like.

[0222] **FIG. 15E** illustrates a portable (mobile) computer which includes a main body **2401**, a camera portion **2402**, an

image receiving portion **2403**, operation switches **2404**, a display portion **2405**, or the like. The self-emission device in accordance with the present invention can be used as the display portion **2405**.

[**0223**] **FIG. 15F** illustrates a personal computer which includes a main body **2501**, a frame **2502**, a display portion **2503**, a key board **2504**, or the like. The self-emission device in accordance with the present invention can be used as the display portion **2503**.

[**0224**] When the brighter luminance of light emitted from the organic EL material becomes available in the future, the self-emission device in accordance with the present invention will be applicable to a front-type or rear-type projector in which light including output image information is enlarged by means of lenses or the like to be projected.

[**0225**] The forementioned electronic devices are more likely to be used for display information distributed through a telecommunication path such as Internet, a CATV (cable television system), and in particular likely to display moving picture information. The self-emission device is suitable for displaying moving pictures since the organic EL material can exhibit high response speed. However, if the contour between the pixels becomes unclear, the moving pictures as a whole cannot be clearly displayed. Since the self-emission device in accordance with the present invention can make the contour between the pixels clear, it is significantly advantageous to apply the self-emission device of the present invention to a display portion of the electronic devices.

[**0226**] A portion of the self-emission device that is emitting light consumes power, so it is desirable to display information in such a manner that the light emitting portion therein becomes as small as possible. Accordingly, when the self-emission device is applied to a display portion which mainly displays character information, e.g., a display portion of a portable information terminal, and more particular, a portable telephone or a sound reproduction device, it is desirable to drive the self-emission device so that the character information is formed by a light-emitting portion while a non-emission portion corresponds to the background.

[**0227**] With now reference to **FIG. 16A, a** portable telephone is illustrated, which includes a main body **2601**, an audio output portion **2602**, an audio input portion **2603**, a display portion **2604**, operation switches **2605**, and an antenna **2606**. The self-emission device in accordance with the present invention can be used as the display portion **2604**. The display portion **2604** can reduce power consumption of the portable telephone by displaying white-colored characters on a black-colored background.

[**0228**] **FIG. 16B** illustrates a sound reproduction device, a car mounted audio equipment in concrete term, which includes a main body **2701**, a display portion **2702**, and operation switches **2703** and **2704**. The self-emission device in accordance with the present invention can be used as the display portion **2702**. Although the car audio equipment of the mount type is shown in the present embodiment, the present invention is also applicable to an audio of the portable type and the set type. The display portion **2704** can reduce power consumption by displaying white-colored characters on a black-colored background, which is particularly advantageous for the audio of the portable type.

[**0229**] As set forth above, the present invention can be applied variously to a wide range of electronic devices in all fields. The electronic device in the present embodiment can be obtained by utilizing a self-emission device having the configuration in which the structures in Embodiments 1 through 6 are freely combined.

[**0230**] [Embodiment 8]

[**0231**] In this embodiment, an external light emitting quantum efficiency can be remarkably improved by using an EL material by which phosphorescence from a triplet exciton can be employed for emitting a light. As a result, the power consumption of the EL element can be reduced, the lifetime of the EL element can be elongated and the weight of the EL element can be lightened.

[**0232**] The following is a report where the external light emitting quantum efficiency is improved by using the triplet exciton (T. Tsutsui, C. Adachi, S. Saito, Photochemical processes in organized molecular systems, ed. K. Honda, (Elsevier Sci. Pub., Tokyo, 1991) p. 437).

[**0233**] The molecular formula of an EL material (coumarin pigment) reported by the above article is represented as follows.

[**0234**] [Chemical Formula 6]

[**0235**] (M. A. Baldo, D. F. O'Brien, Y. You, A. Shoustikov, S. Sibley, M. E. Thompson, S. R. Forrest, Nature 395 (1998) p.151)

[**0236**] The molecular formula of an EL material (Pt complex) reported by the above article is represented as follows.

[**0237**] [Chemical Formula 7]

[**0238**] (M. A. Baldo, S. Lamansky, P. E. Burrows, M. E. Thompson, S. R. Forrest, Appl. Phys. Lett., 75 (1999) p.4.)

[**0239**] (T. Tsutsui, M.-J. Yang, M. Yahiro, K. Nakamura, T. Watanabe, T. Tsuji, Y. Fukuda, T. Wakimoto, S. Mayaguchi, Jpn, Appl. Phys., 38 (12B) (1999) L1502)

[**0240**] The molecular formula of an EL material (Ir complex) reported by the above article is represented as follows.

[**0241**] [Chemical Formula 8]

[**0242**] As described above, if phosphorescence from a triplet exciton can be used, it can be realized that the external light emitting quantum efficiency is three to fourth times as high as that in the case of using fluorescence from a singlet exciton in principle.

[**0243**] The structure according to Embodiment 8 can be freely implemented in combination wiyh any structures of the Embodiments 1 to 7.

[**0244**] By implementing the present invention, the EL layer and the cover layer can be formed by using the same application method and t is possible to effectively form the EL layer, the cathode, the barrier layer, and the cover layer in the same multi-chamber in succession without releasing them to the atmosphere. In addition, by forming the barrier layer and the cover layer, the permeation of moisture and oxygen into the EL layer is prevented. Thus, it is an effective against degradation of the EL layer. Further, forming the barrier layer and the cover layer complete the sealing structure, and hence compared with a normal sealing struc-

ture, it becomes possible to make the sealing structure of the present invention more smaller and lighter in weight.

What is claimed is:

1. A self-light emitting device having an EL element, comprising:

a film that is made of an inorganic material covering said EL element, and

a film that is made of an organic material covering said film made of an inorganic material.

2. A self-light emitting device having an EL element, comprising:

a film that is made of an inorganic material in contact with said EL element, and

a film that is made of an organic material in contact with said film made of an inorganic material.

3. A self-light emitting device having an EL element, comprising:

a film that is made of an organic material covering said EL element, and

a film that is made of an inorganic material covering said film made of an organic material.

4. A self-light emitting device having an EL element, comprising:

a film that is made of an organic material in contact with said EL element, and

a film that is made of an inorganic material in contact with said film made of an organic material.

5. A self-light emitting device according to claim 1, wherein said film made of an inorganic material is formed from silicon nitride, tantalum oxide, aluminum nitride, or carbon.

6. A self-light emitting device according to claim 2, wherein said film made of an inorganic material is formed from silicon nitride, tantalum oxide, aluminum nitride, or carbon.

7. A self-light emitting device according to claim 3, wherein said film made of an inorganic material is formed from silicon nitride, tantalum oxide, aluminum nitride, or carbon.

8. A self-light emitting device according to claim 4, wherein said film made of an inorganic material is formed from silicon nitride, tantalum oxide, aluminum nitride, or carbon.

9. A self-light emitting device according to claim 1, wherein said film made of an organic material is formed from polyamide, polyimide, acrylic resin, or benzocyclobuten.

10. A self-light emitting device according to claim 2, wherein said film made of an organic material is formed from polyamide, polyimide, acrylic resin, or benzocyclobuten.

11. A self-light emitting device according to claim 3, wherein said film made of an organic material is formed from polyamide, polyimide, acrylic resin, or benzocyclobuten.

12. A self-light emitting device according to claim 4, wherein said film made of an organic material is formed from polyamide, polyimide, acrylic resin, or benzocyclobuten.

13. An electric appliance using said self-light emitting device according to claim 1.

14. An electric appliance using said self-light emitting device according to claim 2.

15. An electric appliance using said self-light emitting device according to claim 3.

16. An electric appliance using said self-light emitting device according to claim 4.

17. A method of manufacturing a self-light emitting device having an EL element composed of an anode, an EL layer and a cathode,

wherein a film made of an inorganic material covering said EL element is formed using a CVD method or an evaporation method, and

wherein a film made of an organic material covering said film made of said inorganic material is formed using an ink jet method.

18. A method of manufacturing a self-light emitting device having an EL element composed of an anode, an EL layer and a cathode,

wherein a film made of an organic material covering said EL element is formed using an ink jet method, and

wherein a film made of an inorganic material covering said film made of said organic material is formed using a CVD method or an evaporation method.

19. A method of manufacturing a self-light emitting device according to claim 17, wherein said EL layer, said cathode, said film made of said organic material, and said film made of said inorganic material are formed using the same film deposition apparatus.

20. A method of manufacturing a self-light emitting device according to claim 18, wherein said EL layer, said cathode, said film made of said organic material, and said film made of said inorganic material are formed using the same film deposition apparatus.

21. A method of manufacturing a self-light emitting device according to claim 17, wherein said EL layer and said film made of said organic material are formed by an electric field application method or an ink jet method.

22. A method of manufacturing a self-light emitting device according to claim 18, wherein said EL layer and said film made of said organic material are formed by an electric field application method or an ink jet method.

* * * * *