(19) NL Patent Office (11) **2008155**

(12) C **PATENT**

(21) Request number: **2008155**

(22) Application submitted: **01/20/2012**

(51) **Int.Cl.:**
G02B 6/44 **(2006.01)**

(43) Application published:

(47) Patent granted:
07/23/2013

(45) Patent document issued:
07/31/2013

(73) Patent holder(s):
B.V. TWENTSCHE KABELFABRIEK at Haaksbergen.

(72) Inventor(s):
Luuk Laarveld of Enschede.
Jörg Adomeit at Berlin (DE).

(74) Authorized representative:
Ir. A.A.G. Land et al. at DEN HAAG.

(54) **Optical patch cassette.**

(57) Optical patch cassette for an input cable comprising a plurality of optical fibers, wherein the patch cassette comprises:
- a housing enclosing a distribution space;
- an input for introducing the plurality of optical fibers from the input cable into the distribution space;
- an output holder configured to hold a plurality of output adapters for distributing the optical fibers from the input cable over the output adapters, wherein the output adapters are configured to connect optical output cables to the patch cassette,
wherein the patch cassette comprises connectors configured to connect the patch cassette to another adjacent patch cassette.

NL C 2008155

This patent was granted regardless of the attached result of the examination of the state of the art and the written opinion. The patent specification corresponds to the originally submitted documents.

CommScope Ex. 1026

OPTICAL PATCH CASSETTE

The present invention relates to an optical patch cassette. Furthermore, the invention relates to an assembly of multiple patch cassettes.

Patch cassettes are used, for example, to connect bundled optical fibers in an input cable to equipment or an output cable with bundled optical fibers. Such an input cable may contain, for example, 12 optical fibers.

Such an input cable is connected to the patch cassette via an input that leads into a distribution space enclosed by a housing. In the distribution space, the individual optical fibers of the input cable are connected to adapters that border the distribution space. With these adapters, a multitude of optical cables can be connected to the outer side of the patch cassette. The number of adapter ports in the patch cassette typically corresponds to the number of optical fibers in the input cable since each adapter port is typically configured to connect a single optical fiber. A single adapter can have multiple adapter ports. Therefore, known patch cassettes have a predetermined capacity in terms of the number of fibers to be distributed.

In practice, at a single location, such as in a patch cabinet, up to several thousand optical fibers need to be distributed. For this purpose, a multitude of patch cassettes are kept in a patch cabinet. The cassettes are inserted into a rack and clicked into place. The cabinet or rack is equipped with slots where the cassettes can be clicked into place. At the front of the cabinet are the adapters for connecting the single-fiber cables, while the

CommScope Ex. 1026

input cables from the cassettes are routed within the cabinet.

A drawback of these patch cassettes is that their installation, for example, in a patch cabinet, is a time-consuming task.

Therefore, one of the goals, among others, is to provide a simple and/or efficient patch cassette for optical conductors.

This goal, among other goals, is achieved by an optical patch cassette according to claim 1.

More specifically, this goal, among other goals, is achieved by an optical patch cassette for an input cable comprising a multitude of optical fibers, wherein the patch cassette comprises:

- a housing enclosing a distribution space;
- an input for introducing the plurality of optical fibers from the input cable into the distribution space;
- an output holder configured to hold a multitude of output adapters for distributing the optical fibers from the input cable over the output adapters, wherein the output adapters are designed for connecting optical output cables to the patch cassette,

wherein the patch cassette comprises connectors configured to connect the patch cassette to another adjacent patch cassette.

According to the invention, it is possible to interconnect two or more patch cassettes, thus creating an assembly of patch cassettes. An assembly of patch cassettes can then be

 CommScope Ex. 1026

installed in a patch cabinet, resulting in an efficient setup and a fast way to install a patch cabinet.

The connecting means are preferably located on the housing of the patch cassette and are more preferably designed to interconnect patch cassettes in such a way that the housings of two adjacent patch cassettes are contiguous, meaning they extend adjacent to each other without significant or even no clearance. Thus, a rigid assembly is achieved.

Furthermore, to achieve a rigid assembly, it is beneficial when the interconnecting means are positioned to connect two patch cassettes at different locations, apart from each other.

It is evident that while the above discussion refers to connecting two patch cassettes, the invention allows for compositions involving more than two patch cassettes. For instance, one patch cassette may be designed to connect to two, or even four, other patch cassettes, as will be elaborated on in more detail below.

The cassette according to the invention is provided with output holder, into which adapters can be inserted, for example, by clicking them into the output holder. In this regard, the output holder is preferably arranged to hold different types of adapters, which enhances the deployability of the patch cassette. Thus, in a particular embodiment, both SC simplex and LC duplex adapters can be placed in the output receptacle. More preferably, the patch cassette, more particularly the output holder, is arranged to hold 6 adapters.

 CommScope Ex. 1026

In accordance with a preferred embodiment, the connectors comprise at least two parts, with one part designed for connection to the other part of the other patch cassette. In this case, each patch cassette can connect to two other patch cassettes, as each of the parts can be connected to another part of another patch cassette. Preferably, the parts extend symmetrically flat to locations on the patch cassettes.

More preferably, the connectors include a receiving part and an engaging part. When the two parts are connected, a clamping connection is obtained. In particular, the connectors are designed for a tongue-and-groove connection and/or a snapping or clicking connection. At least one of the parts may be spring-loaded in design, so that when connected, the part is deformed and then clicks into the other part to obtain a secure connection. Such connections are known as such.

Another preferred embodiment of an optical patch cassette according to the invention includes first connectors for connecting an adjacent patch cassette in a first direction and second connectors for connecting an adjacent patch cassette in a second direction that is perpendicular to the first direction. This allows, for example, four patch cassettes to be connected to a single cassette. The cassettes can then be connected in the width direction as well as stacked.

More preferably, each of the connectors is designed to connect patch cassettes in the same connecting direction. In this context, the connecting direction is understood to mean the direction in which two patch cassettes to be connected

 CommScope Ex. 1026

to each other must be moved for their connection. When a patch cassette needs to be connected to an assembly, where this patch cassette is connected to already two patch cassettes included in the assembly, the cassette to be connected can be moved in the connecting direction, so that connections are made with both connectors of both patch cassettes.

The housing preferably includes a back wall, a front wall, two side walls, and top and bottom walls. The height of the housing is preferably significantly smaller than the depth and width of the housing so that the housing is essentially flat. The entrance preferably extends in the back wall, while the output holder preferably extends on the front wall.

According to a further preferred embodiment, the first connectors are designed to connect a first side wall of one cassette to a second side wall of another cassette, and the second connectors are designed to connect the top wall of one cassette to the bottom wall of another cassette. Two cassettes according to the invention can thus be connected in two directions: with adjacent side walls and/or with an adjacent top wall and bottom wall. The cassettes can thus be connected side by side as well as stacked. This provides for an efficient structure without the need for additional external connectors, as is customary when organizing and setting up a patch cabinet.

According to a further preferred embodiment of a patch cassette according to the invention, the housing includes at least one passage that leads into the distribution space for interconnecting two distribution spaces of two adjacent

cassettes in a connected state. This allows the optical fibers, or at least a portion of them, which are introduced into one cassette and terminate in its distribution space, to be routed to another cassette. A passage here has a size such that it can guide a multitude of optical fibers. Especially when the input cable contains more optical fibers than the number of adapters that can be installed in a single patch cassette, a distribution of the fibers can still be achieved using an additional patch cassette or multiple patch cassettes. In an assembly of patch cassettes according to the invention, for example, one input cable can be installed, with the fibers from that input cable being distributed across the patch cassettes through the passages of the patch cassette(s).

Preferably, the housing includes at least a pair of passages, with the first passage of the pair designed to connect to the second passage of the pair of the adjacent cassette. The passages in a pair are preferably symmetrically arranged in the cassette, more particularly in the housing, so that a passage aligns with the passage of another adjacent cassette.

A further preferred embodiment includes multiple passages for interconnecting distribution spaces of patch cassettes extending relative to each other in a first direction and a second direction perpendicular to the first direction. This makes it possible to route fibers between patch cassettes that extend next to each other as well as between stacked patch cassettes.

According to a further preferred embodiment, the housing includes a back wall, a front wall, two side walls, and top

and bottom walls, with the entrance preferably extending into the back wall and the output holder preferably extending on the front wall, and with the side walls and/or the top and bottom walls being provided with passages. The passages are preferably symmetrically arranged so that a passage of one patch cassette is aligned with a passage of an adjacent patch cassette.

It is particularly advantageous when a patch cassette is equipped with both connectors and passages, as this creates a modular system where a set of cassettes can be manufactured based on the client's needs. Depending on the number of incoming fibers, a desired number of cassettes can be assembled, with the fibers being distributed through the passages. The connectors then ensure a sturdy and rigid construction that can be installed in a patch cabinet all at once. The cassette, especially its connectors, preferably includes alignment means for aligning two cassettes during connection for aligning the passages of the cassettes in a connected state. The connectors may include, for example, a stop on which a spacer engages when the passages are aligned, thereby limiting further mutual movement.

However, it is also possible to provide a patch cassette with passages according to the invention without applying the connectors. Even when placing such cassettes in a rack, the passages offer the opportunity to distribute fibers across multiple cassettes.

According to a further preferred embodiment, the entrance includes an input holder designed to hold an input adapter for the optical input cable. The input cable can be connected to the adapter. For example, the adapter can

include an MPO adapter, and the holder is designed to receive such an adapter. Especially when multiple cassettes are connected to each other for distributing fibers between the cassettes, not every cassette needs to have an adapter. It is even possible that only one of the cassettes in an assembly actually has an adapter, with the fibers also being distributed across the other cassettes.

Another preferred embodiment of the optical patch cassette includes output adapters and preferably an input adapter designed to connect to the optical input cable, with a distribution cable extending between the input adapter and the plurality of output adapters for connecting the multitude of fibers from the input cable to the respective output adapters. Such a distribution cable fans out from a single connection on the side of the input adapter to a multitude of cables, each of which can be connected to an output adapter.

According to a further preferred embodiment, the housing includes a first housing part and a second housing part that enclose the distribution space in the assembled state, with the two housing parts having cooperating connectors. In an open state, for example, the adapters can be inserted into their respective holders, and the distribution cable can be attached, if needed. Then, the housing parts can be placed together to obtain a closed unit. Thus, a prefabricated patch cassette is obtained, which can simply be installed in a patch cabinet without the need for any further work inside the cassette. Although it is possible that an input adapter is installed in the housing, it is also possible that an input cable is attached to the cassette. The input cable may already have a distribution cable attached or be integral

with it.

According to a further preferred embodiment, the housing includes a cable length storage, wherein the cable length storage is preferably formed by wall sections extending between the top wall and the bottom wall of the housing. Excess cable length can then be wound around these wall sections. More preferably, there are a multitude of such wall sections, wherein the combined wall sections of the wall sections form more than one curved path, with the length of two separate paths being different. This allows cables of different lengths to be stored efficiently. The wall sections preferably extend circularly, so that excess length can be wound around the described circular path. Cables can also be routed between the wall sections, so that lengths of cable that deviate from the described circle can also be stored efficiently.

According to a further preferred embodiment, the housing includes ventilation holes. This allows the patch cassette, especially an assembly of a multitude of patch cassettes, to be installed above active components in a patch cabinet.

The invention further relates to an assembly of at least two interconnected optical patch cassettes according to the invention. Preferably, the distribution spaces of the cassettes are interconnected so that the fibers of the input cable are distributed to the distribution space of the second patch cassette. Distribution can be achieved, for example, with a distribution cable as discussed above. A portion of the distribution cable extends between the input adapter and the output adapters in a single cassette, while a portion of the distribution cable also extends between the

adapter of one cassette and the output adapters of a subsequent cassette. Preferably, the length of the distribution cable is determined by the greatest distance between the input adapter and an output adapter.

A further preferred embodiment of the assembly includes only one input adapter designed to connect to the optical input cable, with a distribution cable extending between the input adapter of one cassette and the output adapters of both cassettes through the passage for connecting the multitude of fibers from the input cable to the respective output adapters.

The present invention is further illustrated by the following figures, which depict a preferred embodiment of the device according to the invention and are not intended to limit the scope of the invention in any way, wherein:

- Figures 1 and 2 schematically show a patch cassette in a disassembled state in perspective;

- Figure 3 schematically shows the lower part of the cassette with a distribution cable in a top view;

- Figure 4 schematically shows a cross-section of an assembly of two stacked cassettes;

- Figure 5 schematically shows a top view of an assembly of two cassettes connected side by side;

- Figures 6 - 8 schematically show different assemblies of cassettes in perspective.

In Figures 1 and 2, a patch cassette 1 according to the

invention is shown in two different views. The cassette 1 is shown in an open state, with a bottom part 3 separated from a top part 2. The housing parts 2 and 3 can be clicked together using cooperating snap connections 4a and 4b, thereby enclosing a distribution space 5. In the closed state, the distribution space 5 is surrounded by the side walls 3a and 3b, the front wall 3d, the back wall 3c, and the bottom wall 3e of the lower housing part 3 and the top wall 2a of the upper housing part 2.

In the back wall 3c, two holders 7 are provided in which MPO adapters 6 can be slid in the open state as shown in Figures 1 and 2. For this purpose, the holder 7 is provided with two walls between which a complementarily shaped part of an adapter 6 can be held. An optical cable with multiple optical fibers can be connected to an adapter 6.

Near the front wall 3d, a bracket 8 is provided in which adapters 9, 90 can be clicked. In Figure 1, for example, six LC adapters are installed, while in Figure 2, six SC adapters are installed. On the front wall 3d, connection nodes 23 are also provided, to which, for example, a support bracket can be attached to support the optical cables connected to the adapters 9.

As particularly visible in Figure 1, the cassette 1 is equipped with a number of passages 18a, 18b, 17a, and 17b designed to connect the distribution spaces 5 of interconnected cassettes 1. For example, passage 17a is located in side wall 3a, which, after connection, is aligned with a passage 17b located in the side wall 3b of the next cassette. As visible in the figures, the passages 17a and 17b in the open state of cassette 1 are open upwards. This

makes it easy to distribute the fibers between the cassettes, as will be discussed in more detail later. The bottom wall 3e is also provided with a passage 18a, the location of which corresponds to the location of passage 18b in the top wall 2a.

Additionally, the top wall 2a and the bottom wall 3e are provided with openings 15, enclosed by an edge 14. These openings 15 have a cooling function, and they do not lead into the distribution space 5 due to the edge 14. The edges 14 also serve as means for storing excess cable length, as will be discussed in more detail later. To promote ventilation, both the bottom wall 3e and the top wall 2a are also provided with holes 16.

The cassette 1 is also equipped with means for interconnecting cassettes 1 according to the invention. Side wall 3b is provided with narrowing slots 19b and 20b, in which lips 19a and 20a, which are located on side wall 3b of another cassette, can be inserted. Lip 19a is deformable and designed as a spring-loaded lip to achieve a snapping connection. With these connecting means, it is possible to connect different cassettes side by side to create an assembly 100 as shown in Figure 8. To connect cassette la to cassette lb in Figure 8, cassette la is moved in a direction indicated by A, so that the lips 19a and 20a of cassette la fall and engage in the slots 19b and 20b of cassette lb.

The spring-loaded lip 19a prevents the cassettes la and lb from coming apart.

The top side 2a and bottom side 3e are also equipped with cooperating connecting means. Hook-shaped elements 21 are

provided on the top side 2a near the corners, which are designed to engage in slots 22 in the bottom wall 3e. With these cooperating connecting means, it is possible to create an assembly 100 as shown in Figure 6. To connect cassette ld to the assembly of cassettes la-c, cassette ld is moved in direction A relative to the other cassettes for connection. This direction corresponds to the connecting direction for connecting cassettes in the width direction, so it is also possible to create assemblies 100 as shown in Figure 7. By moving cassette la in direction A, the lips 19a and 20a of cassette la connect with the slots 19b and 20b of cassette lc, while at the same time, the hooks 21 of cassette la engage in the slots 22 of cassette lb.

The connection of the fibers to the adapters according to the invention will be further explained with reference to Figures 3 - 5.

In Figure 3, a cassette 1 is shown with an optical cable 13 connected to it, in which six optical fibers are bundled. The cable 13 is equipped with a plug that can be clicked into the MPO adapter 6 of the cassette 1. On the other side of the MPO adapter 6, located in the distribution space 5, a distribution cable 12 is connected. The first side of cable 12 is again equipped with an MPO plug 11 to which six optical cables 12a-f are connected. Each of these cables 12a-f is connected to an LC adapter 9a-f. The length of each of the cables 12a-f is equal and longer than the distance between the MPO adapter 6 and the LC adapters 9a-f. The excess length is therefore routed around edges 14, which serve as excess length storage. The edges 14 enclose a circle, allowing cable length to be wound in a circular manner around the edges 14. Cables can also be routed

through the spaces between the edges 14, making it easy to store cables of different lengths, for example, by routing a cable through the center of the described circle.

In this example, the number of fibers in cable 13 corresponds to the number of adapters 9a-f in the cassette, allowing all incoming fibers to be distributed to suitable adapters 9a-f in the same cassette.

In the example shown in Figure 4, the situation is different. In this example, the incoming cable 13 has twelve optical fibers, so the distribution cable 12 also has twelve individual cables 12a - 1, each containing one optical fiber. Since a single cassette la in this example accommodates six adapters 9a-f, cables 12a-f, with or without using the excess length storage 14, are routed to the adapters 9a-f of cassette la, while cables 12g-1 from distribution cable 12 are routed through the passage 18 formed by passages 18a and 18b to a second cassette lb connected to the first cassette la. Cables 12g-1 are then connected to the adapters 9a-f of the second cassette lb.

The same distribution is possible with two cassettes la and lb that are arranged side by side, see figure 5. A cable 13 with twelve fibers is installed in the first adapter la using an adapter 6. The remaining holders for adapters 7 do not contain adapters in this example. The cables 12a-f from the distribution cable 12 are connected to output adapters 9a-f of the first cassette la via storage 14, while the cables 12g-1 from the distribution space 5 of the first cassette la are guided to the distribution space 5 of the second cassette lb via the passage 17. There, they can be connected to the output adapters 9a-f of the second cassette

 CommScope Ex. 1026

lb.

Of course, more than two cassettes can be connected to then distribute the fibers with a distribution cable to multiple cassettes. The assemblies as shown in figures 6 and 8, for example, have only one input adapter 6, so the fibers from a single input cable 13 are distributed to the assemblies. The cable 13 also has 24 optical fibers in these examples.

It is also possible to apply combinations of these distributions. The cables of a distribution cable can then be distributed both horizontally and vertically across different cassettes, see the assembly as shown in figure 7, which also has only one input cable 13.

The present invention is not limited to the disclosed embodiments but also extends to other embodiments falling within the scope of the appended claims.

CommScope Ex. 1026

CONCLUSIONS

1. Optical patch cassette for an input cable comprising a multitude of optical fibers, wherein the patch cassette comprises:
   - a housing enclosing a distribution space;
   - an input for introducing the plurality of optical fibers from the input cable into the distribution space;
   - an output holder configured to hold a multitude of output adapters for distributing the optical fibers from the input cable over the output adapters, wherein the output adapters are designed for connecting optical output cables to the patch cassette,

   wherein the patch cassette comprises connectors configured to connect the patch cassette to another adjacent patch cassette.

2. Optical patch cassette according to claim 1, wherein the connecting means comprise a receiving part and an engaging part, wherein one part is designed for connection with the other part of the other patch cassette.

3. Optical patch cassette according to claim 1 or 2, wherein the connecting means are designed for a lip-slot connection and/or a snapping or clicking connection.

4. Optical patch cassette according to claim 1, 2, or 3, comprising first connecting means for connecting an adjacent patch cassette in a first direction and second connecting means for connecting an adjacent patch

cassette in a second direction perpendicular to the first direction.

5. Optical patch cassette according to claim 4, wherein the housing comprises a rear wall, a front wall, two side walls, and upper and lower walls, wherein the input extends into the rear wall, and the output holder extends from the front wall, and wherein the first connecting means are designed for connecting a first side wall of one cassette to a second side wall of another cassette, and the second connecting means are designed for connecting the upper wall of one cassette to the lower wall of another cassette.

6. Optical patch cassette according to any of the preceding claims, wherein the housing comprises at least one passage that opens into the distribution space for interconnecting two distribution spaces of two adjacent cassettes in a connected state.

7. Optical patch cassette according to claim 6, wherein the housing comprises at least one pair of passages, wherein the first passage of the pair is designed to connect to the second passage of the pair of the adjacent cassette.

8. Optical patch cassette according to claim 6 or 7, comprising multiple passages for interconnecting distribution spaces of patch cassettes that extend relative to each other in a first direction and a second direction perpendicular to the first direction.

9. Optical patch cassette according to any of the preceding claims 6 - 8, wherein the housing comprises a rear wall,

a front wall, two side walls, and upper and lower walls, wherein the input extends into the rear wall, and the output holder extends from the front wall, wherein the side walls and/or the upper and lower walls are provided with passages.

10. Optical patch cassette according to any of the preceding claims, wherein the input comprises an input holder designed to hold an input adapter for the optical input cable.

11. Optical patch cassette according to any of the preceding claims, comprising output adapters and an input adapter designed to connect to the optical input cable, wherein a distribution cable extends between the input adapter and the multitude of output adapters for connecting the multitude of fibers of the input cable to the respective output adapters.

12. Optical patch cassette according to any of the preceding claims, wherein the housing comprises a first housing part and a second housing part that, in the assembled state, enclose the distribution space, wherein the two housing parts are provided with cooperating connecting means.

13. Optical patch cassette according to any of the preceding claims, wherein the housing is provided with cable length storage, wherein the cable length storage is formed by a multitude of wall parts that extend between the upper wall and the lower wall of the housing, wherein the combined wall sections of the wall parts form more than one curved path, wherein the lengths of two separate paths are different.

14. Optical patch cassette according to any of the preceding claims, wherein the housing is provided with ventilation holes.

15. Assembly of at least two interconnected optical patch cassettes according to any of the preceding claims 6 - 9, wherein the distribution spaces of the cassettes are interconnected in such a way that the fibers of the input cable are distributed to the distribution space of the second patch cassette.

16. Assembly according to claim 15 comprising one input adapter designed to connect to the optical input cable, wherein a distribution cable extends between the input adapter of one cassette and the output adapters of both cassettes via the passage for connecting the multitude of fibers of the input cable to the respective output adapters.

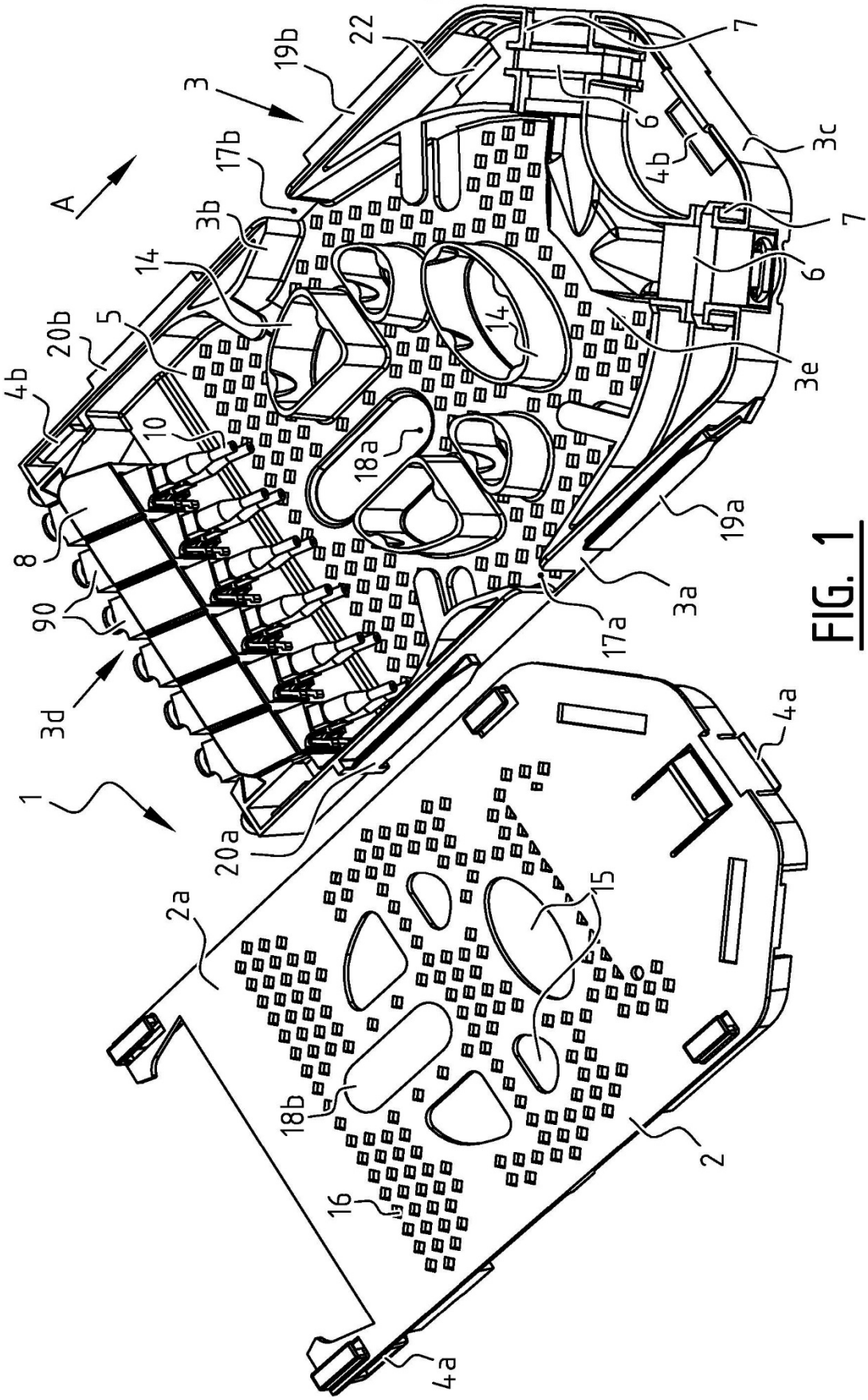
A
1
2
2a
3
3a
3b
3c
3d
3e
4a
4b
5
6
7
8
10
14
15
16
17a
17b
18a
18b
19a
19b
20a
20b
22
90

FIG. 1

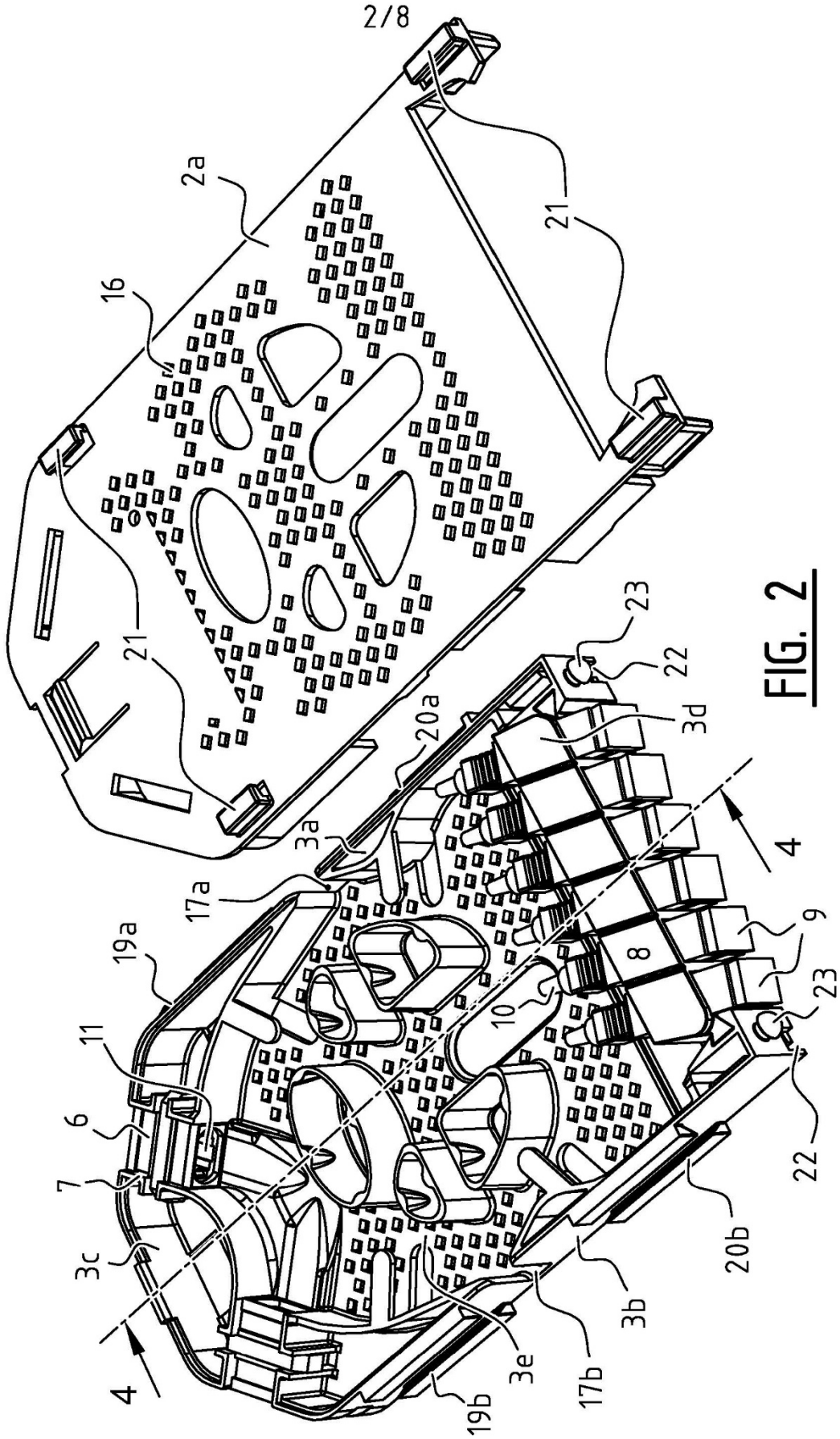
2a
16
21
21
23
22
3d
20a
3a
17a
19a
11
6
7
3c
4
4
9
8
10
23
22
20b
3b
17b
3e
19b

FIG. 2

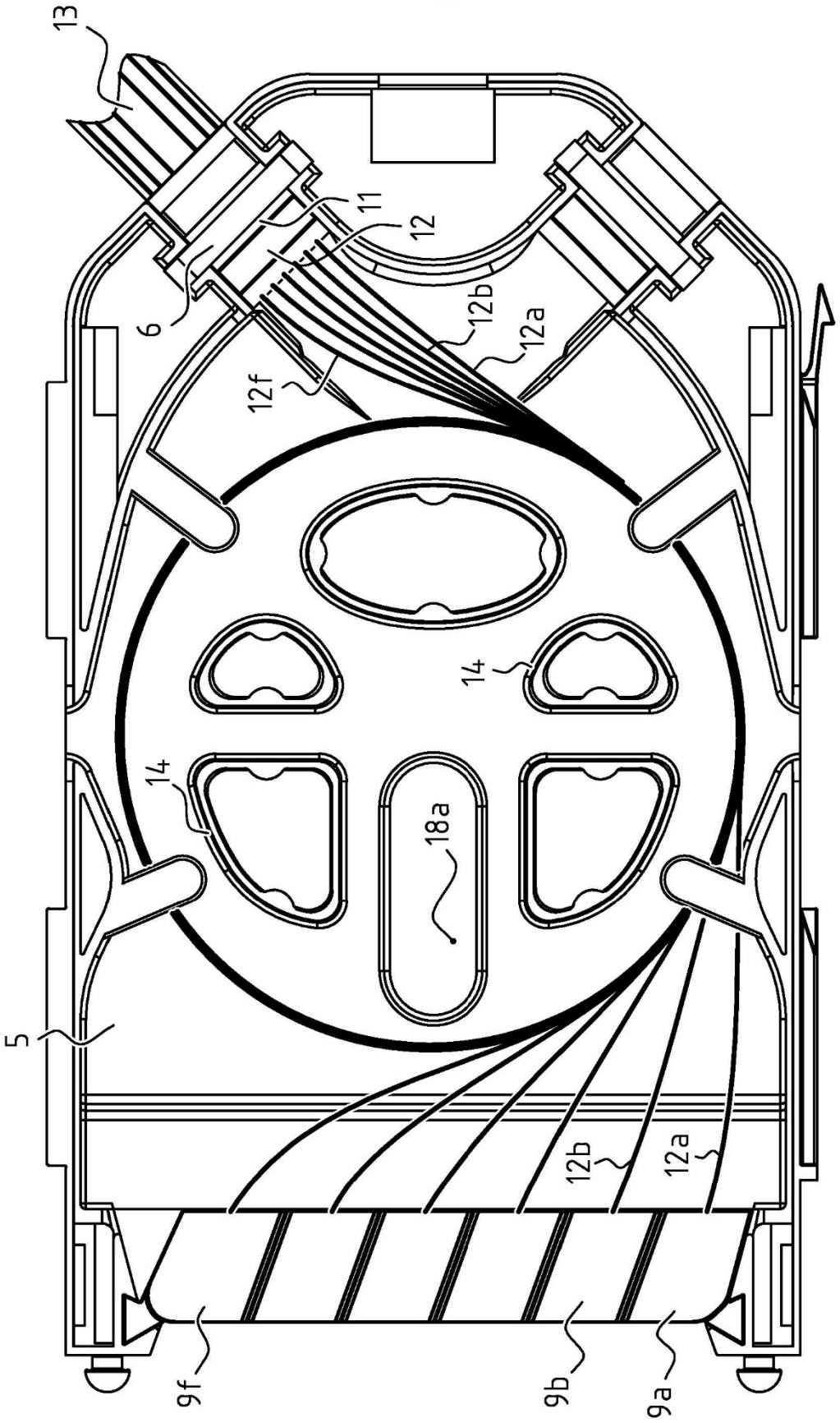

FIG. 3

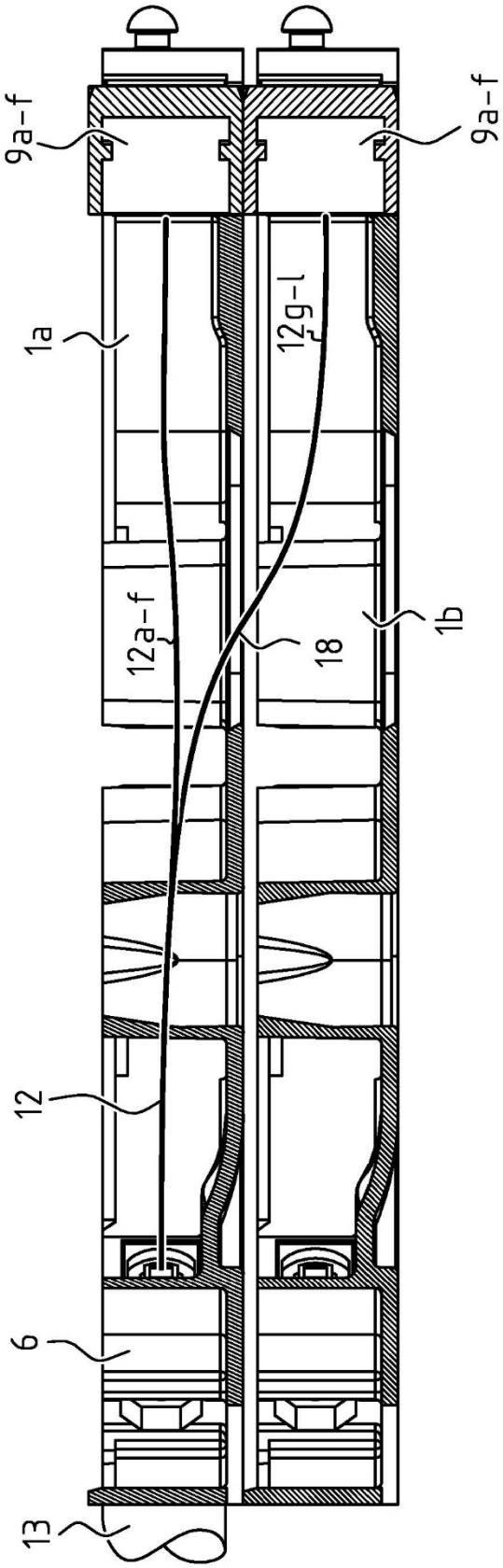

FIG. 4

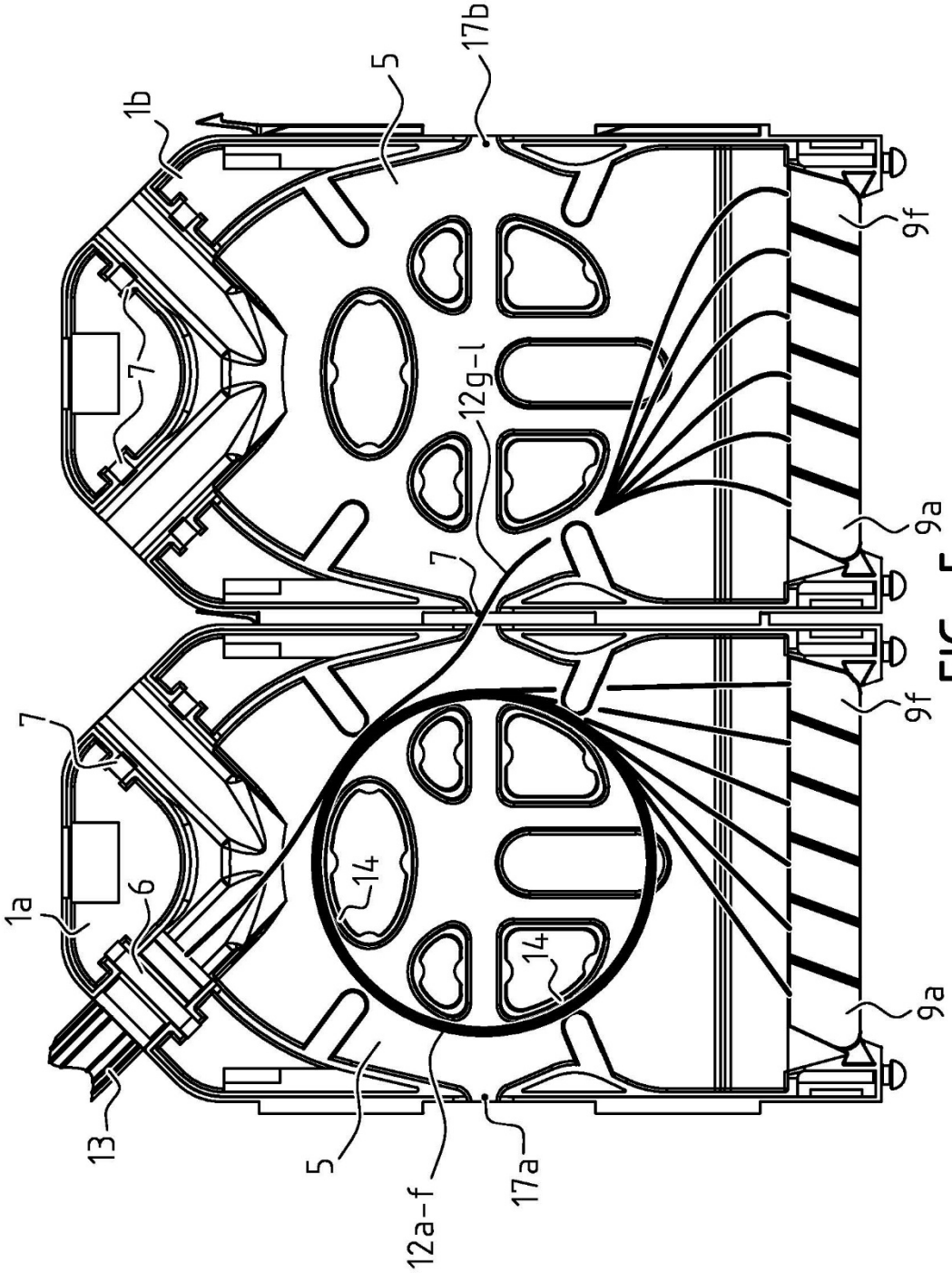

FIG. 5

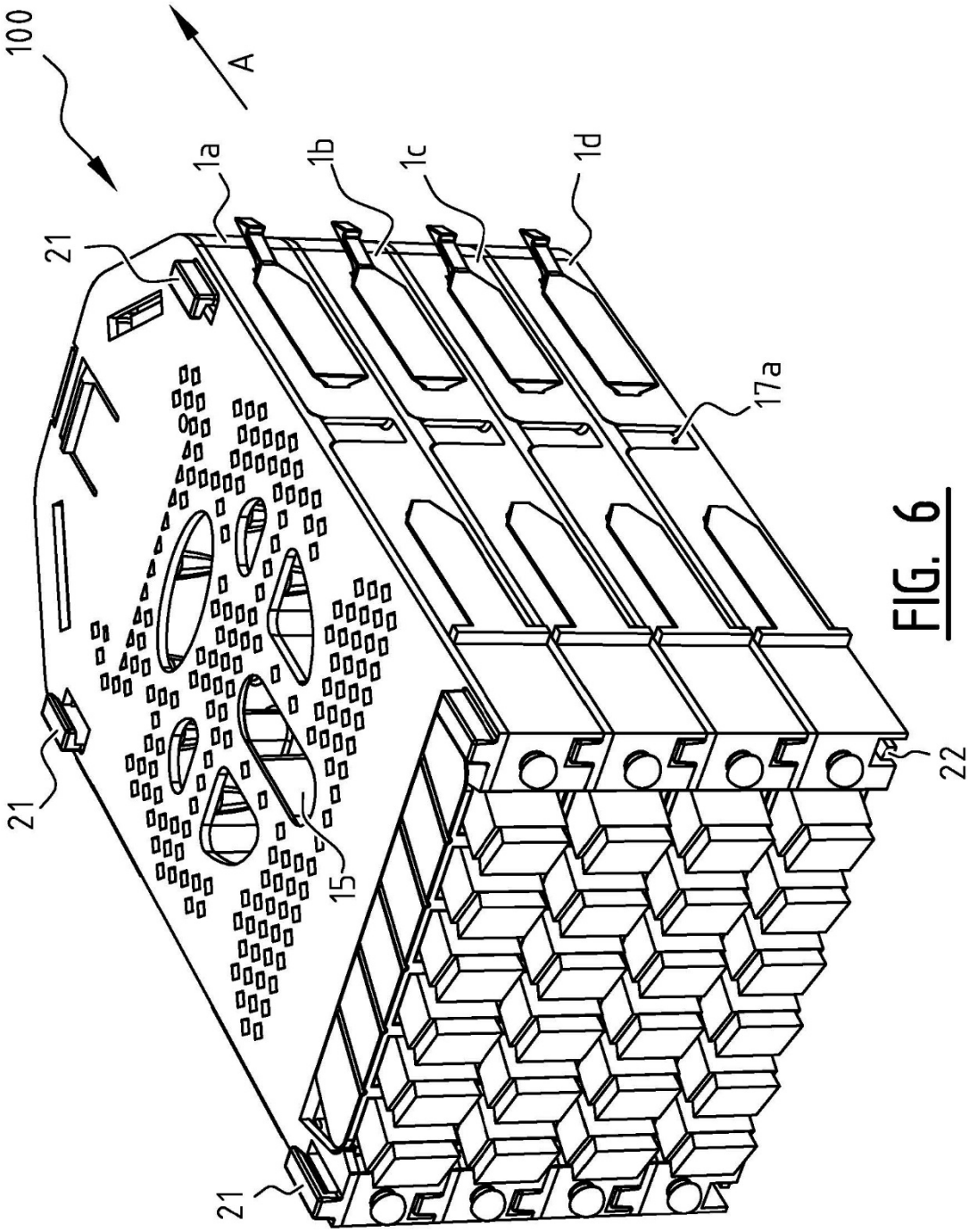

FIG. 6

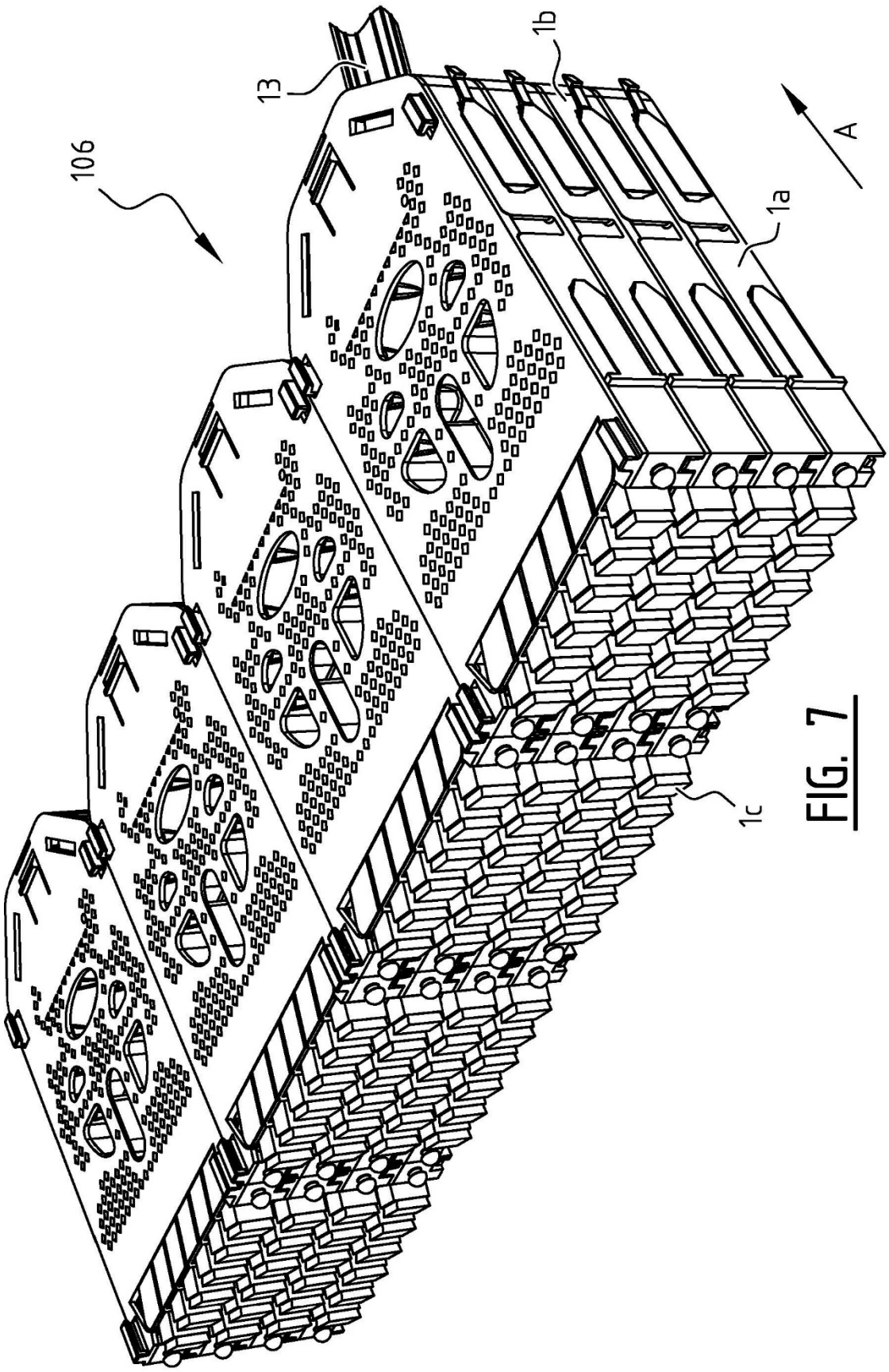

FIG. 7

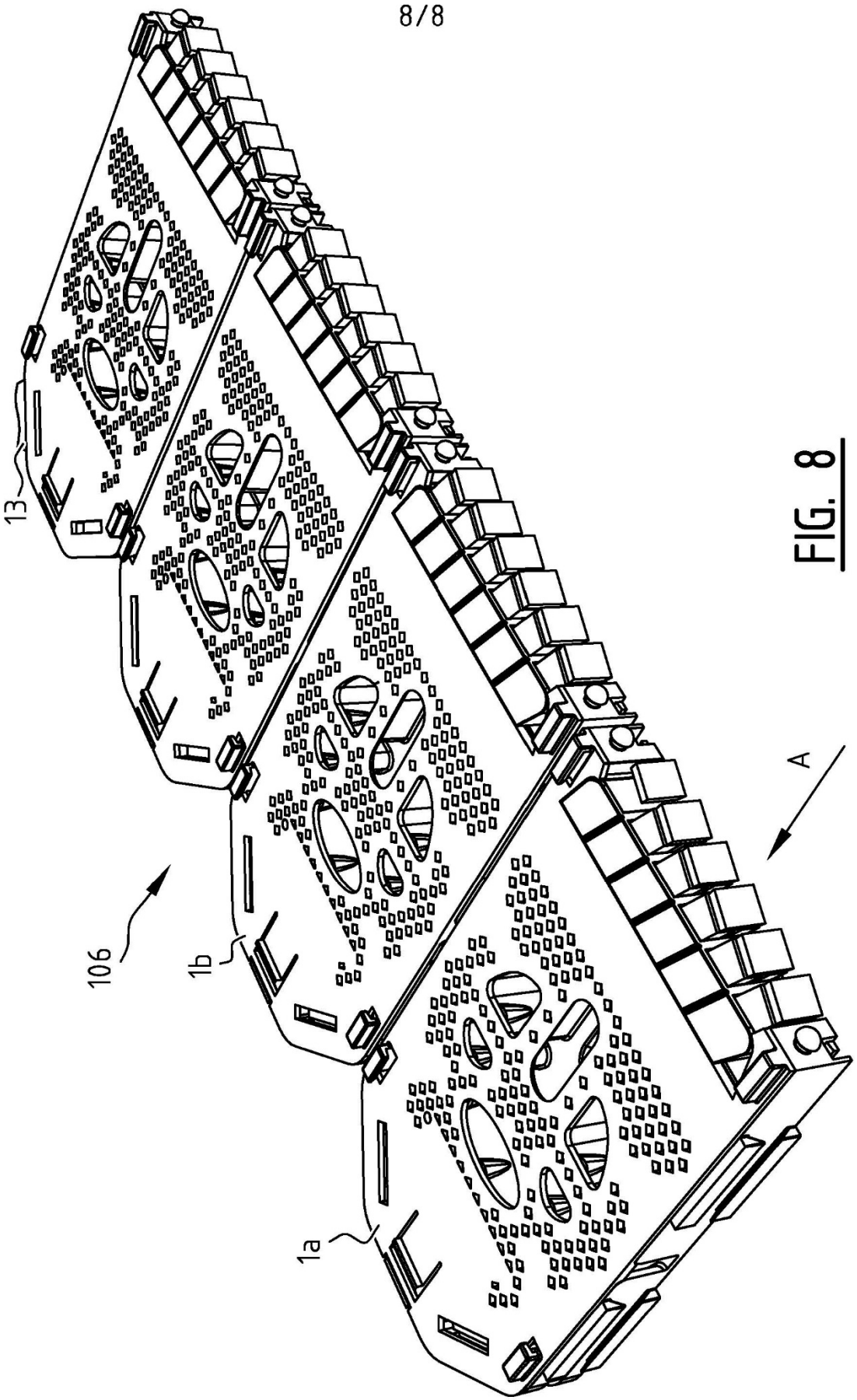

FIG. 8

COOPERATION TREATY (PCT)

REPORT ON NOVELTY SEARCH OF INTERNATIONAL TYPE

IDENTIFICATION OF THE NATIONAL APPLICATION	REFERENCE OF THE APPLICANT OR AUTHORIZED REPRESENTATIVE **2T/2LR05/RSc/9**
Dutch application no. **2008155**	Filing date **20/01/2012**
	Claimed priority date
Applicant (Name) **B.V. TWENTSCHE KABELFABRIEK**	
Date of request for international type search **11/02/2012**	Assigned international type search request number by the International Searching Authority **SN 57676**

1. CLASSIFICATION OF THE SUBJECT MATTER (if multiple classifications apply, provide all classification symbols here)

According to the international classification (IPC)

G02B6/44

II. TECHNOLOGICAL AREAS EXPLORED

Minimum documentation examined

Classification system	Classification symbols
IPC	**G02B**

Examined documentation other than the minimum documentation, to the extent that such documents are included in the areas examined

III.		**NO SEARCH POSSIBLE FOR CERTAIN CONCLUSIONS**	(notes on supplement sheet)
IV.		**LACK OF UNITY OF INVENTION**	(notes on supplement sheet)

Form PCT/ISA 201 A (11/2000)

SEARCH REPORT ON THE RESULT OF THE STATE-OF-THE-ART INTERNATIONAL TYPE SEARCH

Number of the request for a state-of-the-art search
EN 2008155

A. CLASSIFICATION OF THE SUBJECT
INV. G02B6/44
ADD.

According to the International Patent Classification (IPC) or both national classification and IPC.

B. SEARCHED AREAS OF TECHNOLOGY

Surveyed minimum documentation (classification followed by classification symbols)
G02B

Examined documentation other than minimum documentation, for such documents, to the extent that such documents are included in the searched areas

Electronic databases consulted during the search (name of databases and, where practicable, keywords used)

EPA-Internal, INSPEC, WPI Data, COMPENDEX

C. DOCUMENTS OF INTEREST

Category°	Documents cited, possibly indicating passages of special interest	Of relevance to conclusion no.
X Y	WO 2011/130000 A1 (CCS TECHNOLOGY; FABRYKOWSKI GRZEGORZ; MUELLER M A) October 20, 2011 (2011-10-20) * summary; figures 1-6 *	1-4,10, 11,15,16 5-9, 12-14

Y	EP 0 505 710 A1 (SIEMENS AG [DE]) September 30, 1992 (1992-09-30) * summary; figures 1-4 *	5-9, 12-14

A	JP 9 304631 A (JAPAN RIICOM KK; FUJIKURA LTD) November 28, 1997 (1997-11-28) * summary; figure 6 *	1-5

A	EP 0 617 304 A1 (REICHLE & DE MASSARI FA [CH]) September 28, 1994 (1994-09-28) * summary; figures 1,3 *	1-5

	-/--	

[X] Further documents are listed in the remainder of Box C.

[X] Members of the same patent family are listed in an appendix

° Special categories of cited documents

"A" literature not belonging to category X or Y describing the state of the art
"D" mentioned in the patent application

"E" earlier patent application, published on or after the filing date, describing the same invention

"L" literature mentioned for other reasons

"o" non-written state of the art

"p" literature published between the priority date and the filing date

"T" literature published after the filing date or the priority date that is not detrimental to the patent application but is mentioned to clarify the theory or principle underlying the invention

"X" the claim is considered not new or not inventive in view of this literature

"Y" the claim is considered not inventive in view of the combination of this literature with other cited literature of the same category, where the combination is considered obvious to a person skilled in the art

"&" member of the same patent family or corresponding patent publication

Date on which the state-of-the-art study of international type was completed
Sept. 7, 2012

Transmission date of the report of the state-of-the-art study of international type

Name and address of agency
European Patent Office, P.B. 5818 Patentlaan 2
NL - 2280 HV Rijswijk
Tel. (+31-70) 340-2040,
Fax: (+31-70)340-3016

The authorized official
Faderl, Inga

Form PCT/ISA/201 (second sheet) (January 2004).

SEARCH REPORT ON THE RESULT OF THE STATE-OF-THE-ART INTERNATIONAL TYPE SEARCH

Number of the request for a state-of-the-art search
EN 2008155

C.(Continued). DOCUMENTS OF INTEREST

Category°	Documents cited, possibly indicating passages of special interest	Of relevance to conclusion no.
A	EP 0 474 091 AI (REICHLE & DE MASSARI FA [CH]) March 11, 1992 (1992-03-11) * summary; figure 2 * -----	1-5
A	DE 40 08 840 CI (PETROTTA, GIANMARIA) August 29, 1991 (1991-08-29) * summary; figure 1 * -----	1
A	DE 199 56 067 A1 (RXS KABELGARNITUREN GMBH & CO [DE]) May 23, 2001 (2001-05-23) * summary; figures 21-24 * -----	1
A	US 2009/324189 A1 (HILL JOHN P ET AL.) December 31, 2009 (2009-12-31) * summary; figures 5.18-23 * -----	1

Form PCT/ISN201 (continued second sheet) (January 2004)

SEARCH REPORT ON THE RESULT OF THE STATE-OF-THE-ART INTERNATIONAL TYPE SEARCH
Information on members of the same patent family

Number of the request for a state-of-the-art search
EN 2008155

Patent document mentioned in the report		Date of publication	Corresponding writing(s).			Date of publication
W0 2011130000	Al	2011-10-20	NO			
EP 0505710	Al	1992-09-30	AT	161635	T	1998-01-15
			DE	4106171	A1	1992-09-03
			EP	0505710	A1	1992-09-30
			US	5206927	A	1993-04-27
JP 9304631	A	1997-11-28	CN	1169543	A	1998-01-07
			ID	16907	A	1997-11-20
			JP	9304631	A	1997-11-28
			US	6226434	B1	2001-05-01
EP 0617304	A1	1994-09-28	CH	688112	A5	1997-05-15
			CN	1092872	A	1994-09-28
			EP	0617304	A1	1994-09-28
EP 0474091	A1	1992-03-11	DE	59108325	D1	1996-12-12
			EP	0474091	A1	1992-03-11
DE 4008840	C1	1991-08-29	NO			
DE 19956067	A1	2001-05-23	AR	029019	A1	2003-06-04
			AT	262686	T	2004-04-15
			CA	2384252	A1	2001-05-31
			DE	19956067	A1	2001-05-23
			EP	1234203	A2	2002-08-28
			ES	2217037	T3	2004-11-01
			US	6810193	B1	2004-10-26
			WW	0138917	A2	2001-05-31
US 2009324189	A1	2009-12-31	US	2009324189	A1	2009-12-31
			US	2012057838	A1	2012-03-08

Form PCT/ISA/201 (patent family continuation sheet) (January 2004)

Agency NL
Ministry of Economic Affairs, Agriculture and Innovation

WRITTEN OPINION

File No.	Filing date *(day/month/year)*	Priority date *(day/month/year)*	Application No.
SN57676	01/20/2012		NL2008155
International Patent Classification (IPC). INV. G02B6/44			
Applicant B.V. TWENTSCHE KABELFABRIEK			

This opinion contains indications relating to the following items:

- ☒ Box No. I Basis of the opinion
- ☐ Box No. II Priority
- ☐ Box No. III Non-establishment of opinion with regard to novelty, inventive step and industrial applicability
- ☐ Box No. IV Lack of unity of invention
- ☒ Box No. V Reasoned statement with regard to novelty, inventive step or industrial applicability; citations and explanations supporting such statement
- ☐ Box No. VI Certain documents cited
- ☐ Box No. VII Certain defects in the application
- ☐ Box No. VIII Certain observations on the application

	Examiner
	Faderl, Ingo

Form NL237A (Cover sheet) (July 2006)

WRITTEN OPINION

Box No. I Basis of this opinion

1. This opinion has been established on the basis of the latest set of claims filed before the start of the search.
2. With regard to any **nucleotide and/or amino acid sequence** disclosed in the application and necessary to the claimed invention, this opinion has been established on the basis of:

   a. type of material:

   ☐ a sequence listing

   ☐ table(s) related to the sequence listing

   b. format of material:

   ☐ on paper

   ☐ in electronic form

   c. time of filing/furnishing:

   ☐ contained in the application as filed.

   ☐ filed together with the application in electronic form.

   ☐ furnished subsequently tor the purposes of search.

3. ☐ In addition, in the case that more than one version or copy of a sequence listing and/or table relating thereto has been filed or furnished, the required statements that the information in the subsequent or additional copies is identical to that in the application as filed or does not go beyond the application as filed, as appropriate, were furnished.
4. Additional comments:

Box No. V Reasoned statement with regard to novelty, inventive step or industrial applicability; citations and explanations supporting such statement

1. Statement

Novelty	Yes:	Claims	5-9, 12-14
	No:	Claims	1-4, 10, 11, 15, 16
Inventive step	Yes:	Claims	
	No:	Claims	1-16
Industrial applicability	Yes:	Claims	1-16
	No:	Claims	

2. Citations and explanations

see separate sheet

Re Item V

Reasoned statement with regard to novelty, inventive step or industrial applicability; citations and explanations supporting such statement

Reference is made to the following documents:

D1: WO 2011/130000 A1 (CCS TECHNOLOGY) Oct. 20, 2011

D2: EP 0 505 710 A1 (SIEMENS AG) September 30, 1992

1 The present application does not meet the requirements of novelty, because the subject-matter of claim 1 is not new.

1.1 The document D1 discloses (the references in parentheses applying to this document): optical patch cassette (see figure 3, ref. 10) for an input cable comprising a plurality of optical fibers, wherein the patch cartridge comprises: a housing (11) enclosing a manifold; an input (below) for feeding the plurality of optical fibers (idem) from the input cable into the manifold; an output holder (21, above, left) arranged for holding a plurality of output adapters for distributing the optical fibers (not shown) of the input cable among the output adapters, wherein the output adapters are arranged for connecting optical output cables to the patch cassette, wherein the patch cassette includes connecting means (17, 18) arranged for connecting the patch cassette to another adjacent patch cassette (see figure 3, but also figures 2, 5 and 6).

1.2 The same reasoning applies, mutatis mutandis, to the subject-matter of the corresponding independent claim 15, which is therefore also considered as not being new.

2 Dependent claims 2-14 and 16 do not contain any features which, in combination with the features of any claim to which they refer, meet the requirements of novelty and/or inventive step (see documents and passages cited in the Search Report, in particular document D2).