US010215944B2

(12) **United States Patent**
Sedor et al.

(10) **Patent No.: US 10,215,944 B2**
(45) **Date of Patent: Feb. 26, 2019**

(54) **MODULAR FIBER OPTIC TRAY**

(71) Applicant: **Panduit Corp.**, Tinley Park, IL (US)

(72) Inventors: **Thomas M. Sedor**, Orland Park, IL (US); **Jerry A. Wiltjer**, Frankfort, IL (US); **Robert A. Reid**, Battleground, IL (US); **Joseph E. Sanders**, Elwood, IL (US); **Joel W. Kwasny**, Plainfield, IL (US); **Bon B. Sledzinski**, Westmont, IL (US)

(73) Assignee: **Panduit Corp.**, Tinley Park, IL (US)

(*) Notice: Subject to any disclaimer, the term of this patent is extended or adjusted under 35 U.S.C. 154(b) by 1 day.

(21) Appl. No.: **15/628,818**

(22) Filed: **Jun. 21, 2017**

(65) **Prior Publication Data**

US 2018/0003912 A1 Jan. 4, 2018

Related U.S. Application Data

(60) Provisional application No. 62/356,662, filed on Jun. 30, 2016.

(51) **Int. Cl.**

G02B 6/00	(2006.01)
G02B 6/44	(2006.01)
G02B 6/38	(2006.01)

(52) **U.S. Cl.**

CPC ***G02B 6/4452*** (2013.01); ***G02B 6/3897*** (2013.01); ***G02B 6/4453*** (2013.01); ***G02B 6/4455*** (2013.01)

(58) **Field of Classification Search**

CPC .. G02B 6/4452; G02B 6/3897; G02B 6/4471; G02B 6/4446; G02B 6/00

See application file for complete search history.

(56) **References Cited**

U.S. PATENT DOCUMENTS

2,056,219	A	10/1936	Stout et al.
2,550,339	A	4/1951	Ehrman
3,392,543	A	7/1968	Miller

(Continued)

FOREIGN PATENT DOCUMENTS

CN	103004041	A	3/2013
EP	2159613	A2	8/2009

(Continued)

OTHER PUBLICATIONS

Pretium EDGE® Advanced Optical (AO) Solutions Features and Benefits; Corning Cable Systems LLC; 1 page; May 2013.

(Continued)

Primary Examiner — Jennifer Doan

(74) *Attorney, Agent, or Firm* — Christopher S. Clancy; James H. Williams; Anthony N. Bartosik

(57) **ABSTRACT**

The present invention provides modular trays having cutout features that are configured to engage with a mounting feature of one or more removable rails. The removable rails may be removeably secured to a tray body in a plurality of positions to allow a user to install or uninstall rails to support different sized fiber optic modules. For example, a tray may support a twenty-four optical fiber module, two twelve optical fiber modules, or three eight optical fiber modules. Fiber optic enclosures housing the trays can be affixed to the outside of a fiber optic enclosure and allow for easy stacking and unstacking.

21 Claims, 68 Drawing Sheets

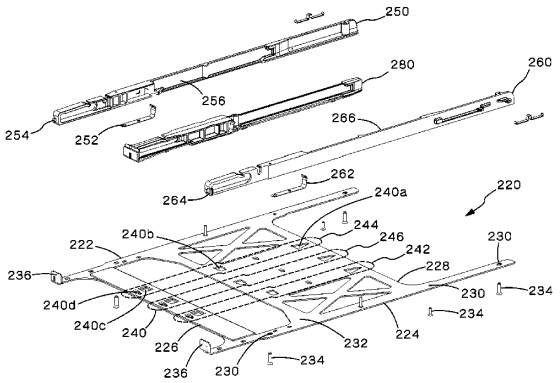

CommScope Ex. 1005

(56) **References Cited**

U.S. PATENT DOCUMENTS

3,478,535 A 11/1969 Perez et al.
4,034,572 A 7/1977 Morris et al.
4,266,853 A 5/1981 Hutchings et al.
4,585,303 A 4/1986 Pinsard et al.
4,655,521 A 4/1987 Thomas
4,792,203 A 12/1988 Nelson et al.
4,824,196 A 4/1989 Bylander
4,846,565 A 7/1989 Swanson et al.
4,986,762 A 1/1991 Keith
5,046,811 A 9/1991 Jung et al.
5,129,030 A 7/1992 Petrunia
5,142,606 A 8/1992 Carney et al.
5,167,001 A 11/1992 Debortoli et al.
5,212,761 A 5/1993 Petrunia
5,325,455 A 6/1994 Henson et al.
5,339,379 A 8/1994 Kutsch et al.
5,370,541 A 12/1994 Bossard
5,442,726 A 8/1995 Howard et al.
5,448,670 A 9/1995 Blew et al.
5,490,229 A 2/1996 Ghandeharizadeh et al.
5,497,444 A 3/1996 Wheeler
5,511,144 A 4/1996 Hawkins et al.
5,647,043 A 7/1997 Anderson et al.
5,717,810 A 2/1998 Wheeler
5,758,003 A 5/1998 Wheeler et al.
5,804,765 A 9/1998 Siemon et al.
5,836,786 A 11/1998 Pepe
5,902,155 A 5/1999 Polgar et al.
5,946,440 A 8/1999 Puetz
5,978,540 A 11/1999 Bechamps et al.
6,017,238 A 1/2000 Johnston
6,080,011 A 6/2000 Tsao et al.
6,085,003 A 7/2000 Knight
6,086,415 A 7/2000 Sanchez et al.
6,095,852 A 8/2000 Gregory, II
6,109,978 A 8/2000 Stellman et al.
6,167,183 A 12/2000 Swain
6,203,130 B1 3/2001 Montgelas et al.
6,210,216 B1 4/2001 Tso-Chin et al.
6,356,697 B1 3/2002 Braga et al.
6,396,992 B1 5/2002 Debal
6,591,051 B2 7/2003 Solheid et al.
6,768,860 B2 7/2004 Liberty
6,769,551 B2 8/2004 Rafferty et al.
6,771,861 B2 8/2004 Wagner et al.
6,788,846 B2 9/2004 Hileman et al.
6,920,274 B2 7/2005 Rapp et al.
6,944,389 B2 9/2005 Giraud et al.
6,946,600 B1 9/2005 Stoller et al.
6,974,438 B2 12/2005 Bentley
7,000,784 B2 * 2/2006 Canty G02B 6/4459 211/26
7,031,588 B2 4/2006 Cowley et al.
7,087,840 B2 8/2006 Herring et al.
7,113,687 B2 9/2006 Womack et al.
7,147,383 B2 12/2006 Sullivan
7,200,314 B2 4/2007 Womack et al.
7,200,316 B2 4/2007 Giraud et al.
7,318,321 B2 1/2008 Grassmuck et al.
7,320,507 B2 1/2008 White et al.
7,330,629 B2 2/2008 Cooke et al.
7,376,321 B2 5/2008 Bolster et al.
RE40,375 E 6/2008 Abel et al.
7,416,347 B2 8/2008 Livingston et al.
7,418,182 B2 8/2008 Krampotich
7,509,015 B2 3/2009 Murano
7,529,458 B2 5/2009 Spisany et al.
7,532,799 B2 5/2009 Gronvall et al.
7,570,861 B2 8/2009 Smrha et al.
7,628,644 B1 12/2009 Peluffo et al.
7,672,561 B1 3/2010 Keith et al.
7,681,187 B2 3/2010 Spitaels et al.
7,682,187 B2 3/2010 Spitaels et al.
7,686,518 B2 3/2010 Case et al.
7,689,089 B2 3/2010 Wagner et al.
7,722,411 B2 5/2010 Merrow et al.
7,729,586 B2 6/2010 Keith
7,744,176 B2 6/2010 Milligan
7,756,378 B2 7/2010 Ruiz
7,756,380 B2 7/2010 Ruiz et al.
7,760,983 B2 7/2010 Jadaud
7,826,705 B2 11/2010 McGranahan et al.
D628,462 S 12/2010 Sato
7,854,333 B2 12/2010 Kottke et al.
7,856,166 B2 12/2010 Biribuze et al.
7,876,995 B2 1/2011 Keith et al.
7,887,244 B2 2/2011 Milette et al.
7,889,961 B2 2/2011 Cote et al.
7,903,925 B2 3/2011 Cooke et al.
7,945,135 B2 5/2011 Cooke et al.
7,945,136 B2 5/2011 Cooke et al.
7,962,000 B2 6/2011 Wagner et al.
7,974,105 B2 7/2011 Dean, Jr. et al.
7,979,985 B2 7/2011 Spitaels et al.
8,014,646 B2 9/2011 Keith et al.
8,038,015 B2 10/2011 Laursen et al.
8,038,354 B2 10/2011 Nielson et al.
8,061,534 B2 11/2011 Laursen et al.
8,075,198 B2 12/2011 Milette et al.
8,075,344 B2 12/2011 Shih
8,121,458 B2 2/2012 Barth et al.
8,135,257 B2 3/2012 Cooke et al.
8,154,886 B2 4/2012 Hendrix et al.
8,179,684 B2 5/2012 Smrha et al.
8,184,938 B2 5/2012 Cooke et al.
8,203,450 B2 6/2012 German et al.
8,254,742 B2 8/2012 Womack
8,280,216 B2 10/2012 Cooke et al.
8,285,104 B2 10/2012 Davis et al.
8,290,332 B2 10/2012 Mudd
8,290,333 B2 10/2012 Barlowe et al.
8,297,854 B2 10/2012 Bickham et al.
8,301,004 B2 10/2012 Cooke et al.
8,326,107 B2 12/2012 Cooke et al.
8,331,752 B2 12/2012 Biribuze et al.
8,403,599 B2 3/2013 Hawkins et al.
8,411,465 B2 4/2013 Dean, Jr. et al.
8,418,974 B2 4/2013 Felcman et al.
8,433,171 B2 4/2013 Cooke et al.
8,437,147 B2 5/2013 Dean, Jr. et al.
8,437,597 B2 5/2013 Cooke et al.
8,452,148 B2 5/2013 Cooke et al.
8,452,149 B2 5/2013 Krampotich et al.
8,472,776 B2 6/2013 Ruiz
8,520,996 B2 8/2013 Cowen et al.
8,538,226 B2 9/2013 Makrides-Saravanos et al.
8,559,783 B2 10/2013 Campos et al.
8,565,572 B2 10/2013 Krampotich et al.
8,625,950 B2 1/2014 Beamon et al.
8,625,951 B2 1/2014 Pimentel et al.
8,705,926 B2 4/2014 Giraud et al.
8,712,206 B2 4/2014 Cooke et al.
8,746,466 B2 6/2014 Taylor
8,867,883 B2 10/2014 Crain et al.
8,879,881 B2 11/2014 Cote et al.
8,934,253 B2 * 1/2015 Anderson G02B 6/4452 361/727
8,938,147 B2 1/2015 Krampotich et al.
8,953,924 B2 2/2015 Cote et al.
8,965,168 B2 2/2015 Cowen et al.
8,992,099 B2 3/2015 Blackwell, Jr. et al.
9,008,485 B2 4/2015 Ramirez et al.
9,020,320 B2 4/2015 Cooke et al.
9,075,216 B2 7/2015 Cote et al.
9,075,217 B2 7/2015 Giraud et al.
9,116,324 B2 8/2015 Cooke et al.
9,140,870 B2 9/2015 Marmon et al.
9,170,392 B2 10/2015 Krampotich et al.
9,213,161 B2 12/2015 Cote et al.
9,213,363 B2 12/2015 Anderson et al.
9,279,951 B2 3/2016 McGranahan et al.
9,690,065 B2 6/2017 Wiltjer et al.
2006/0018622 A1 1/2006 Caveney et al.
2008/0089656 A1 4/2008 Wagner et al.

(56) **References Cited**

U.S. PATENT DOCUMENTS

2008/0175552	A1	7/2008	Smrha et al.
2009/0245743	A1	10/2009	Cote et al.
2010/0051886	A1	3/2010	Cooke et al.
2010/0052346	A1	3/2010	Cooke et al.
2010/0054684	A1	3/2010	Cooke et al.
2010/0296791	A1	11/2010	Makrides-Saravanos et al.
2010/0310225	A1	12/2010	Anderson et al.
2010/0316334	A1	12/2010	Kewitsch
2010/0322580	A1	12/2010	Beamon et al.
2010/0322581	A1	12/2010	Cooke et al.
2010/0322582	A1	12/2010	Cooke et al.
2010/0322583	A1	12/2010	Cooke et al.
2011/0268405	A1	11/2011	Cote et al.
2011/0268406	A1	11/2011	Giraud et al.
2011/0268408	A1	11/2011	Giraud et al.
2011/0268410	A1	11/2011	Giraud et al.
2011/0268411	A1	11/2011	Giraud et al.
2011/0274402	A1	11/2011	Giraud et al.
2012/0114295	A1	5/2012	Guzzo et al.
2013/0011105	A1	1/2013	Barlowe et al.
2013/0028567	A1	1/2013	Parikh et al.
2013/0121657	A1	5/2013	Seo et al.
2013/0148935	A1	6/2013	Cooke et al.
2013/0214662	A1	8/2013	Pimentel et al.
2013/0251319	A1	9/2013	Compton et al.
2013/0251326	A1	9/2013	Cooke et al.
2013/0287357	A1	10/2013	Solheid et al.
2014/0010511	A1	1/2014	Smrha et al.
2014/0079365	A1	3/2014	Hill et al.
2016/0033732	A1	2/2016	Giraud et al.
2016/0062050	A1	3/2016	Giraud et al.
2016/0062055	A1	3/2016	Giraud et al.
2016/0062058	A1	3/2016	Dagley et al.
2016/0062068	A1	3/2016	Giraud et al.
2016/0299308	A1	10/2016	Wiltjer et al.

FOREIGN PATENT DOCUMENTS

EP	2544035	A1	1/2013
JP	2002124790	A	4/2002
WO	9942881	A1	8/1999
WO	2016033580	A1	3/2016

OTHER PUBLICATIONS

Pretium EDGE® AO Solutions The Next Evolution of Your Data Center Revolution; Coming Cable System, LLC; 8 pages; May 2013.
Dell™ Poweredge™ 1950 Server; Dell, Inc.; 2 pages; Nov. 2006.
Dell™ Best Practices Guide for Rack Enclosures PE2440 & PE4220; Dell, Inc.; 17 pages; 2009.
Service Description: PowerEdge™ Basic Server Installation with Rack Mounting; Dell, Inc.; 2 pages; 2008.
Dell™ PowerEdge™ 1950 III Server; Dell, Inc.; 2 pages; Jun. 2008.
Service Description: Installation of a Dell Server, Storage or Peripheral Device; Dell, Inc.; 11 pages; Aug. 5, 2013.
Server Administrator Version 7.2 Installation Guide; Dell, Inc.; 106 pages; Jan. 2013.
WorkForce® Pro WP-4530 Instructions; Epson American, Inc.; 4 pages; Aug. 2011.
Hubbell OptiChannel High Density 144 Port 1U Fiber Enclosure; Hubbell Premise Wiring; 2 pages; Jan. 2012.
Hubbell OptiChannel Ultra Compact Fiber LC to MPO Cassette Modules; Hubbell Premise Wiring; 2 pages; Oct. 2010.
Pretium EDGE® HD Solutions for Enterprise Data Centers and Storage Area Networks; Coming Cable Systems, LLC; 20 pages; Nov. 2012.
RapidNet™ Pre-Terminated Network Cabling Systems LITPD203 Rev. 2; HellermannTyton; 8 pages; Apr. 2005.
Value-Added Module (VAM) System Monitor, Splitter, WDM, CWDM and DWDM Modules 6th Edition; TE Connectivity; 32 pages; Aug. 2014.
Mini VAM Connector Cleaning Instructions ADCP-90-412, Issue 3; ADC Telecommunications, Inc.; 8 pages; Sep. 2002.
Express Fiber Management® (XFM) MPO Optical Cassettes; AFL; 2 pages; 2003.
Fiber Optic Cassette Module 12 Fiber, MTP to 6-SC and 6-LC Configuration Customer Drawing; Panduit™ Corp.; 1 page; Oct. 26, 2004.
MTP® Brand Bulkhead Adapters; US Conec; 2 pages; 2010.
QuickNet™ SFQ Series MTP Fiber Optic Cassettes Specification Sheet; Panduit Corp.; 2 pages; Jan. 2009.
High Density SFQ Small Form Factor QuickNet™ Fiber Cable Assemblies Product Bulletin; Panduit Corp.; 2 pages; Feb. 2011.
Development of Mini-MPO Connector; Naoko Shimoji, Jun Yamakawa and Masato Shiino; 5 pages; Jun. 29, 1998.
OPTICOM™ Fiber Optic Rack Mount Enclosure CM274 Installation Instructions; Panuit Corp.; 2 pages; 2002.
Evolution of Cabling Standards (Q&A); NORDX/CDT; 8 pages; Feb. 2002.
Opticom QuickNet Rack Mount Fiber Cassette Enclosures Installation Instructions FS006; Panduit Corp.; 11 pages; 2008.
Introducing the NG4access ODF platform—the next-generation optical distribution frame that increases density while reducing cost and installation time in the network; TE Connectivity; 4 pages; Aug. 2012.
Pretium Edge® Extension and Flush Mount Bracket for EDGE-01U; Corning Cable Systems, LLC; 2 pages; Dec. 10, 2013.
Fiber Enclosures; Hubbell Premise Wiring; 10 pages; http://ecatalog.hubbell-premise.com/ProductInformation/ViewCatalog.aspx?Dest=hubbell-premise.com/literature/ecatalog/i.pdf; printed Sep. 25, 2015.
OptiMo® Ultra High Density Pre-terminated Fiber Optic Solutions; Legrand® Ortronics; 1 page; undated.
Belden® Infrastructure Solutions Catalog, cover page; p. 21; and back page, 2013 (3 pgs.).
Hallam Manufacturing Cable Zone Patch Frames, undated (2 pgs.).
Leviton® Nertwork Solutions Patch Panel Selection Guide, cover page; p. 12; and back page, undated (3 pgs.).
Siemon™ VersaPOD Zero-U Sliding Vertical Patch Panels (3 pgs)., Jun. 27, 2016.
Teleconnectivity Zero RU Quick-Fit Bracket, cover page; page 2; and back page (3 pgs.), 2013.

* cited by examiner

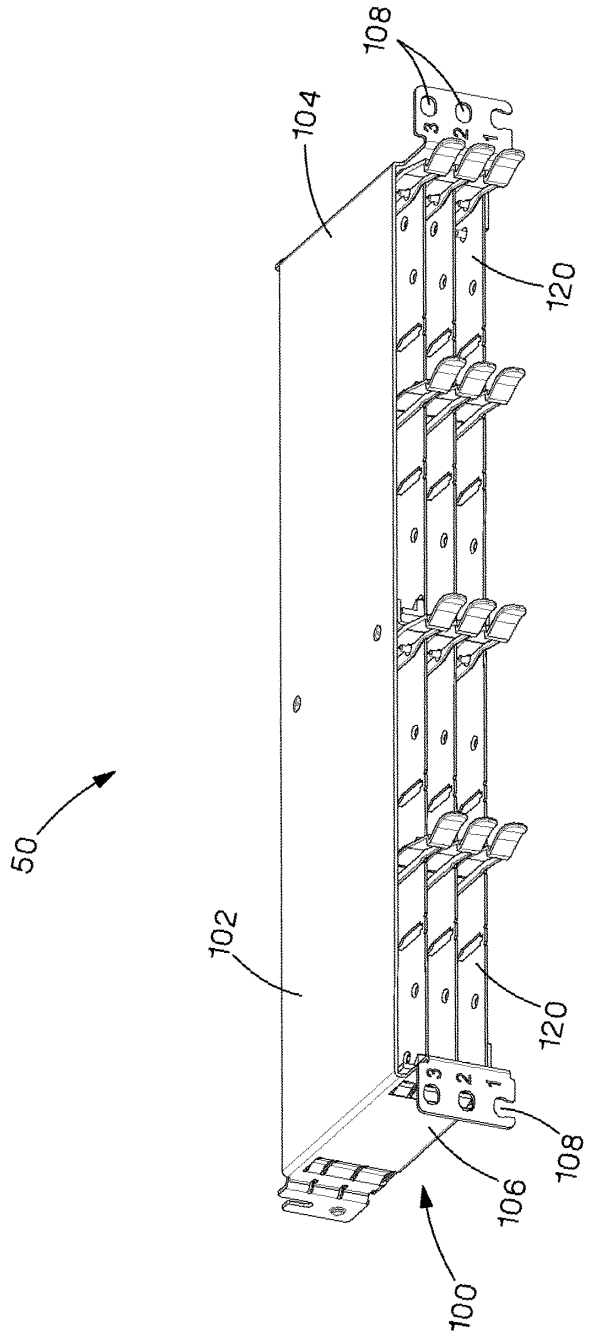

FIG. 1A

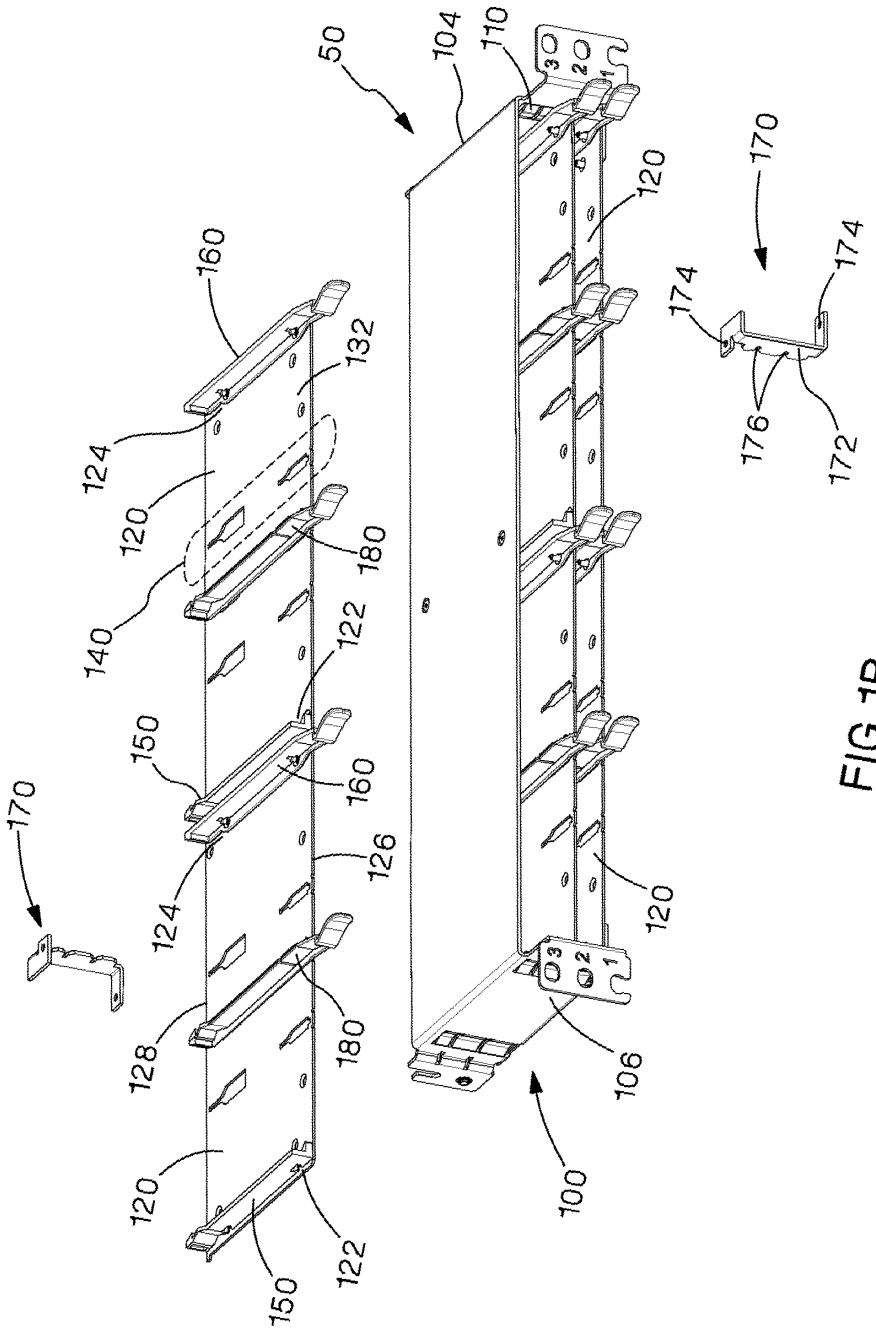
50
104
110
3
2
1
120
170
174
174
176
172
160
132
124
120
180
140
122
150
160
170
126
124
120
128
180
106
100
120
122
150

FIG. 1B

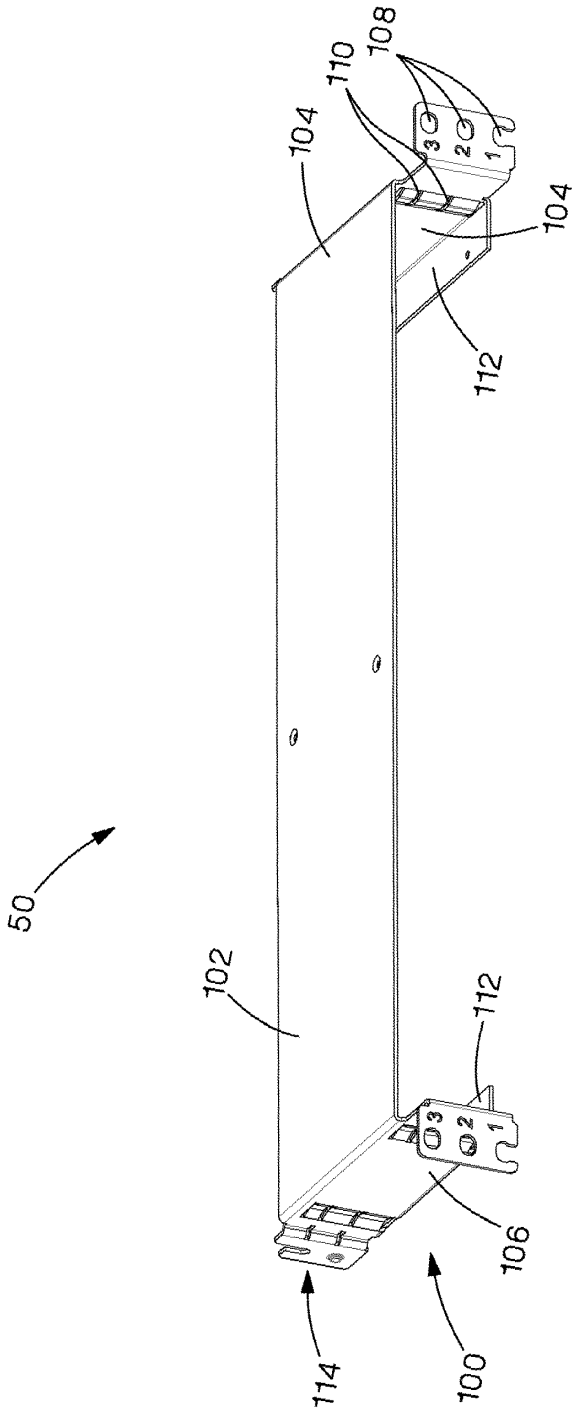

FIG.2A

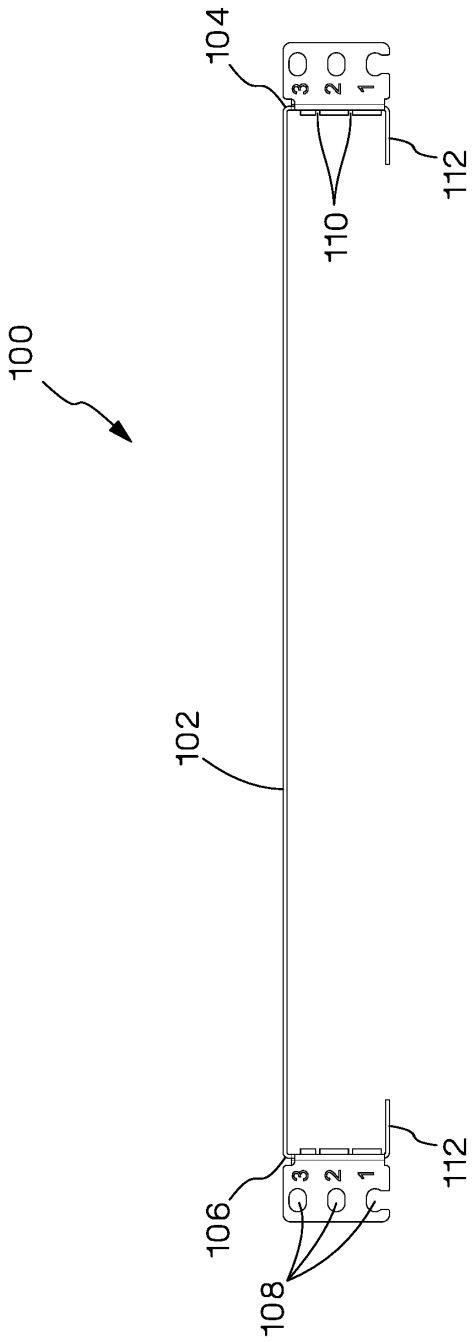

FIG.2B

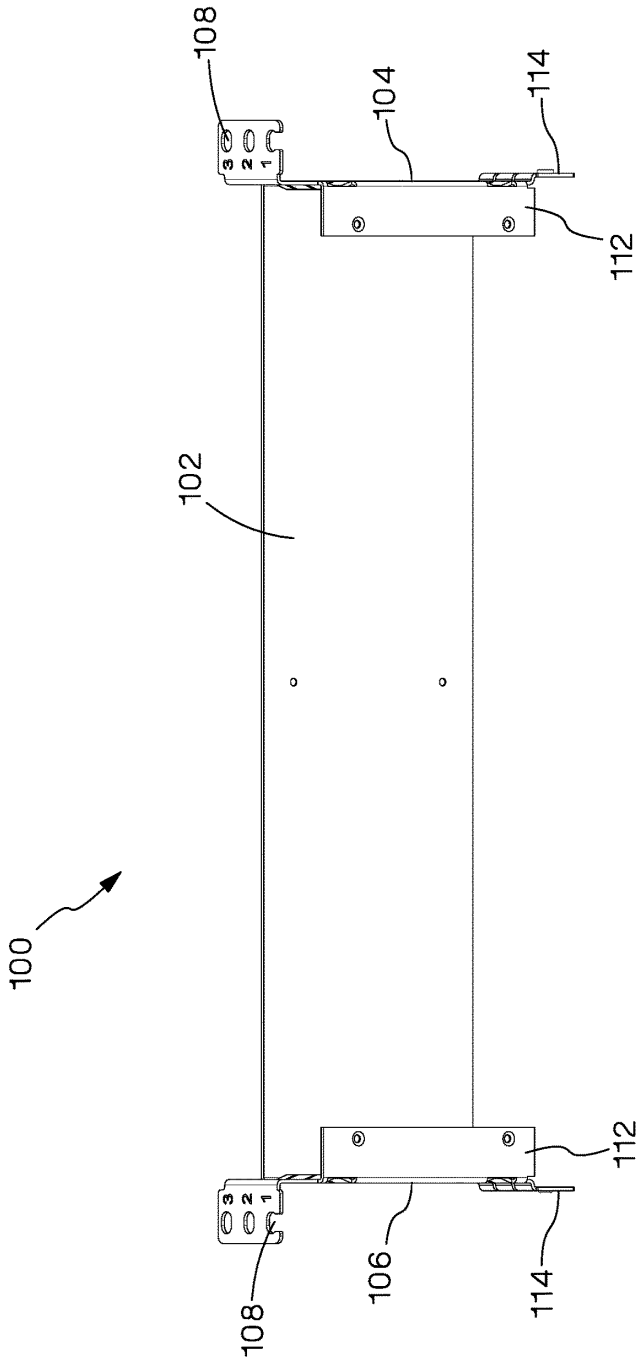

FIG.2C

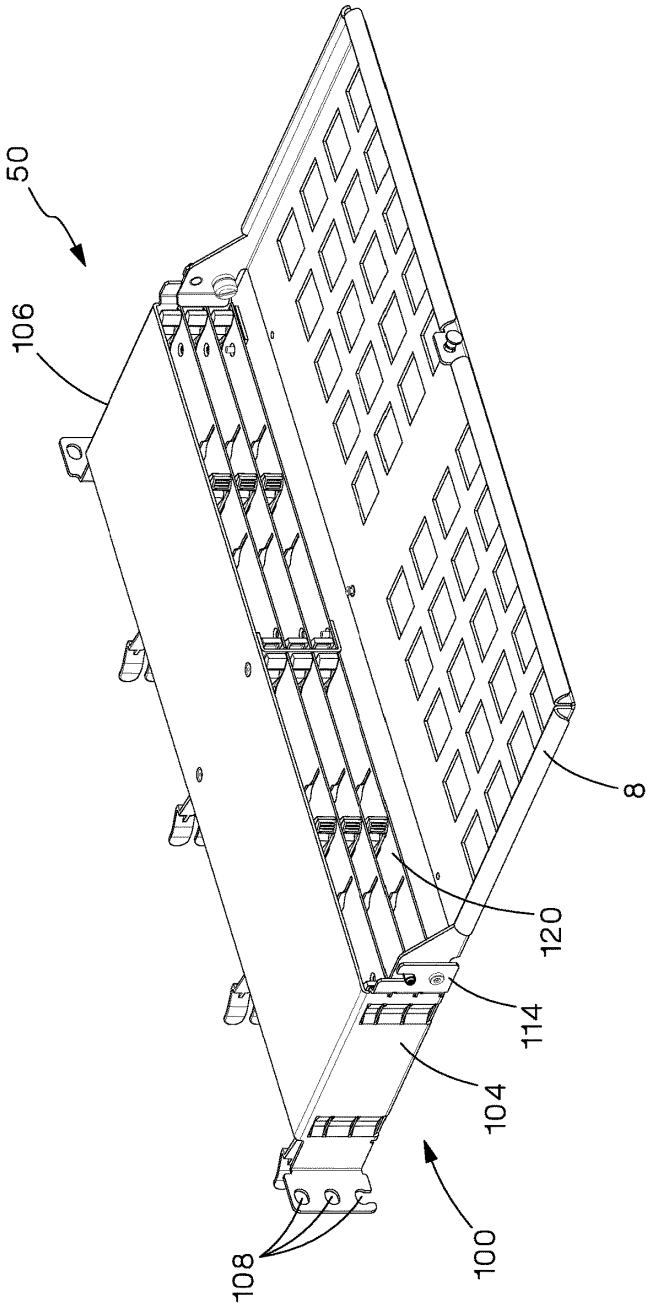

FIG.3

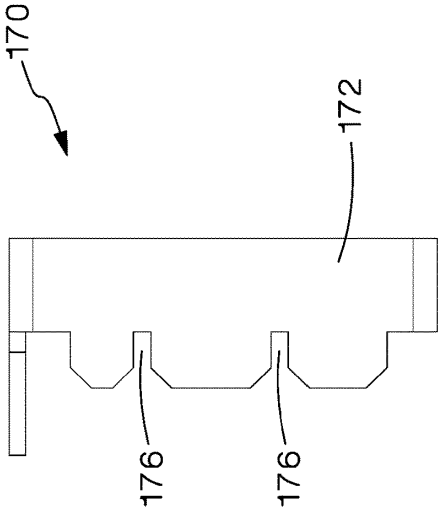

FIG.4B

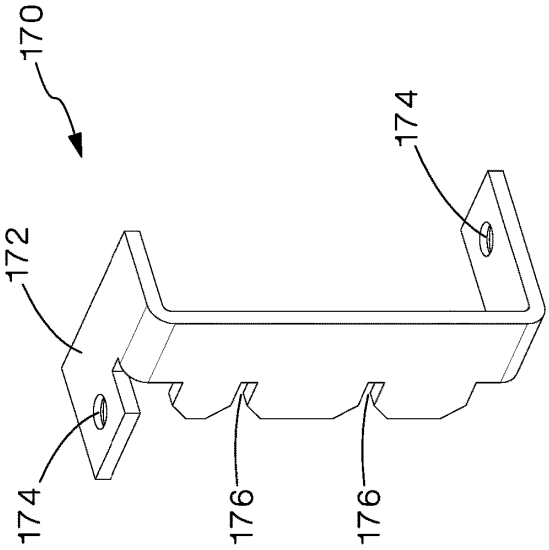

FIG.4A

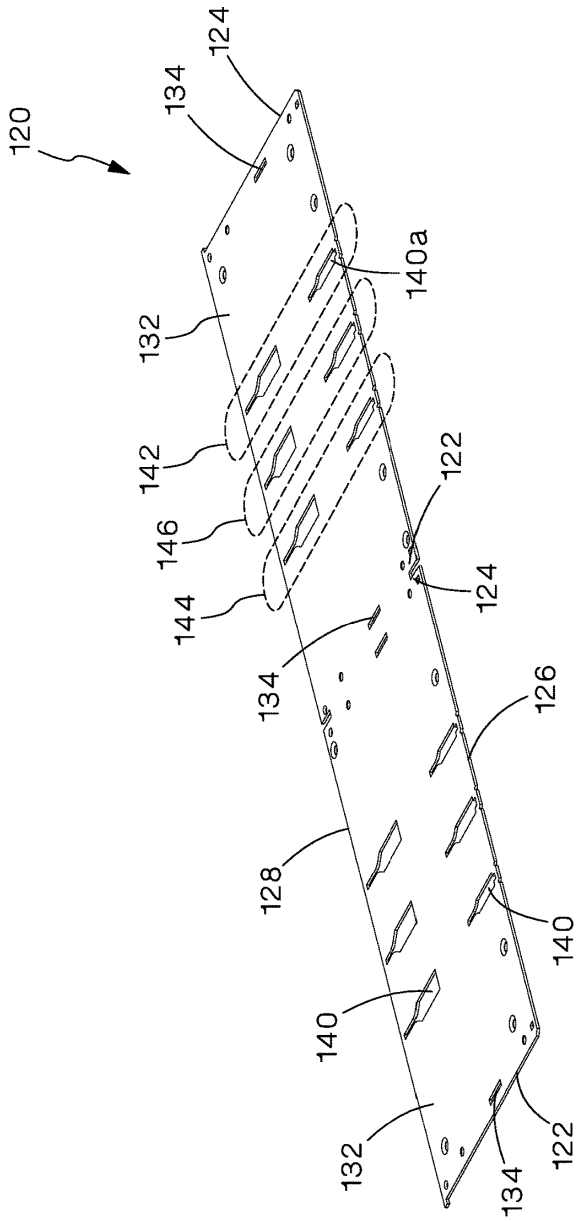
120
124
134
140a
132
142
146
144
122
124
134
126
128
140
140
132
134
122

FIG.5

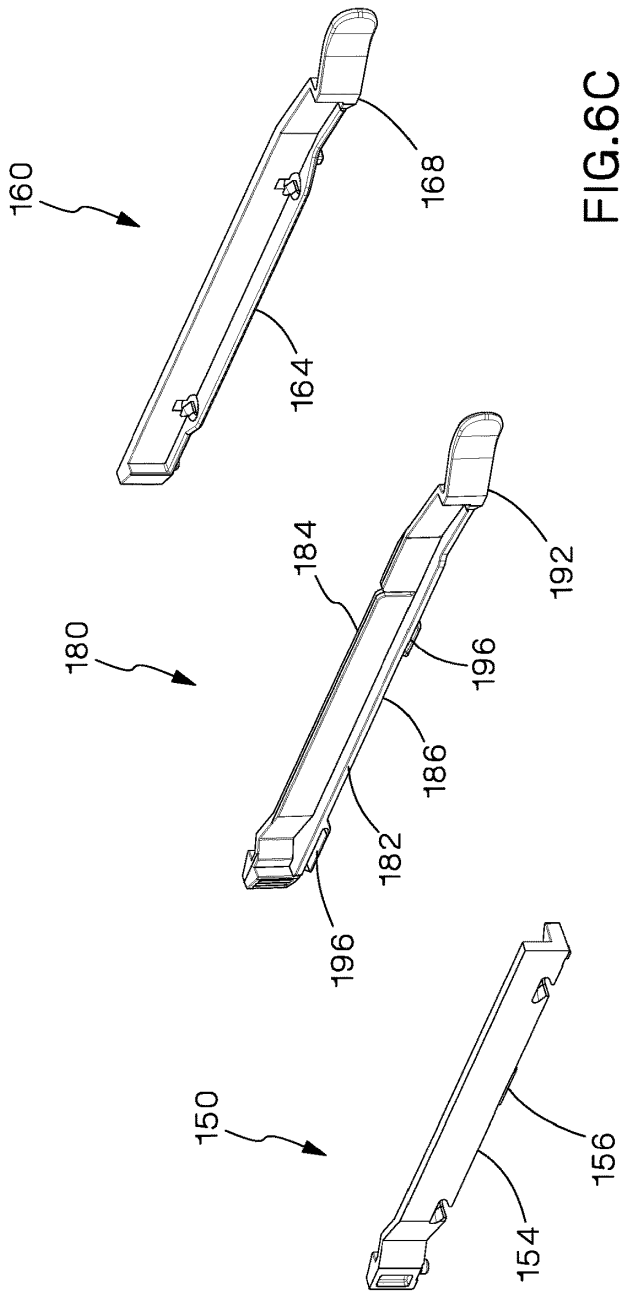

FIG.6C

FIG.6B

FIG.6A

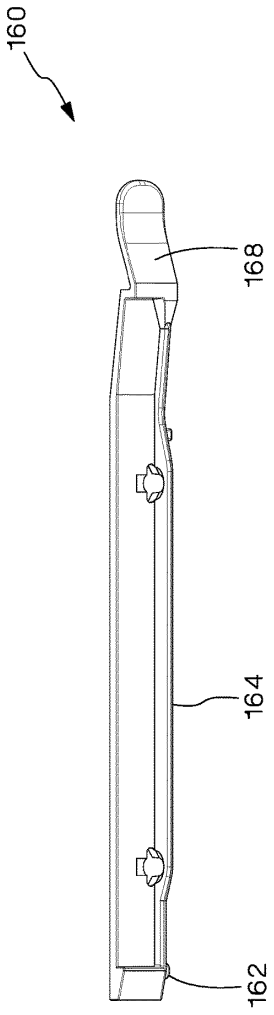

FIG.6D

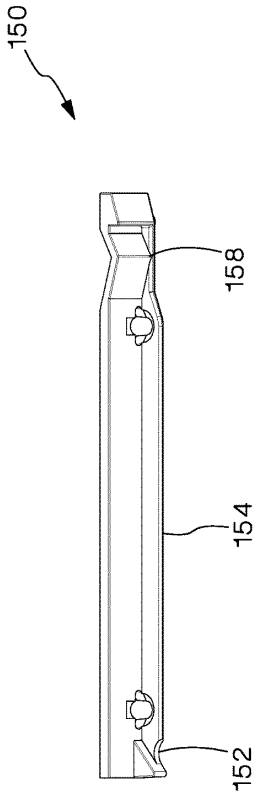

FIG.6E

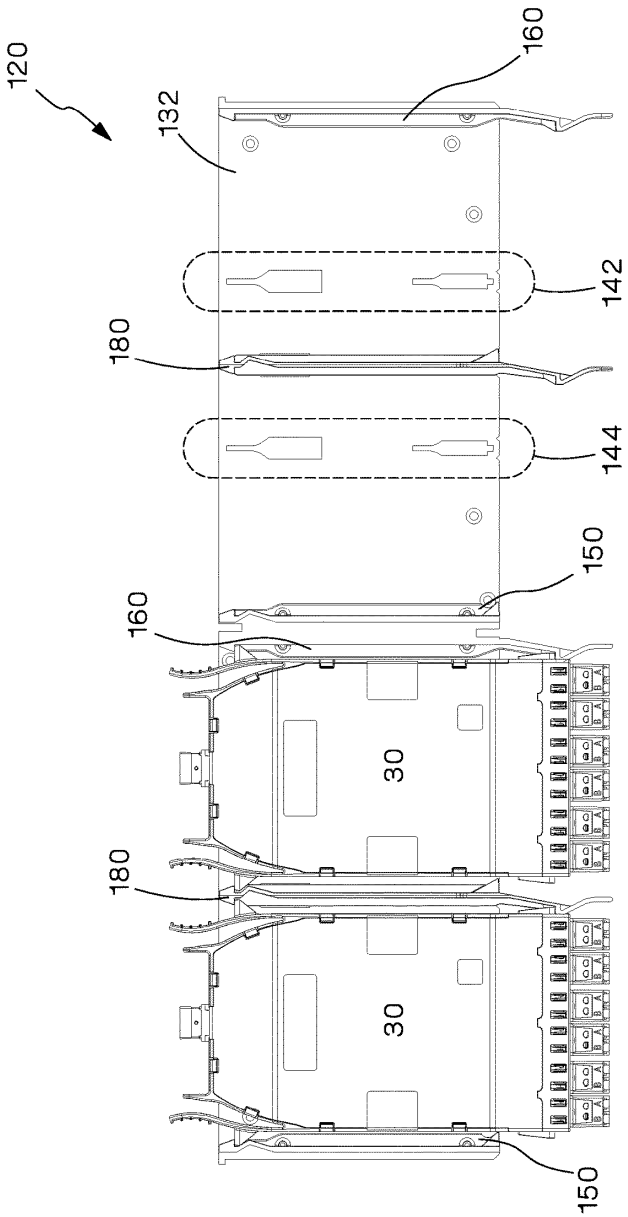

FIG.7

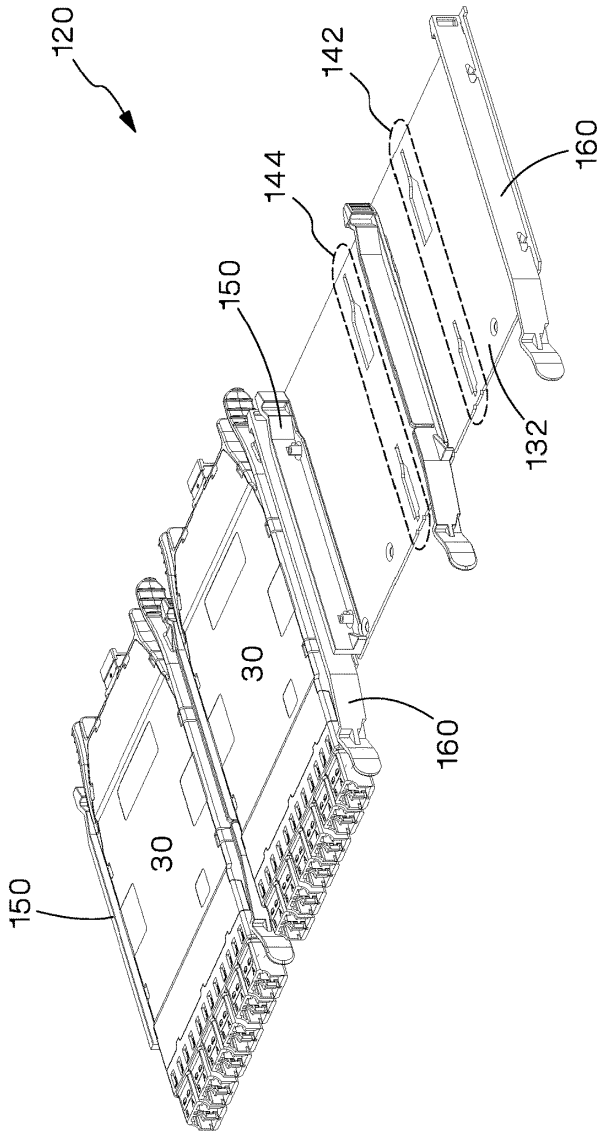

FIG.8

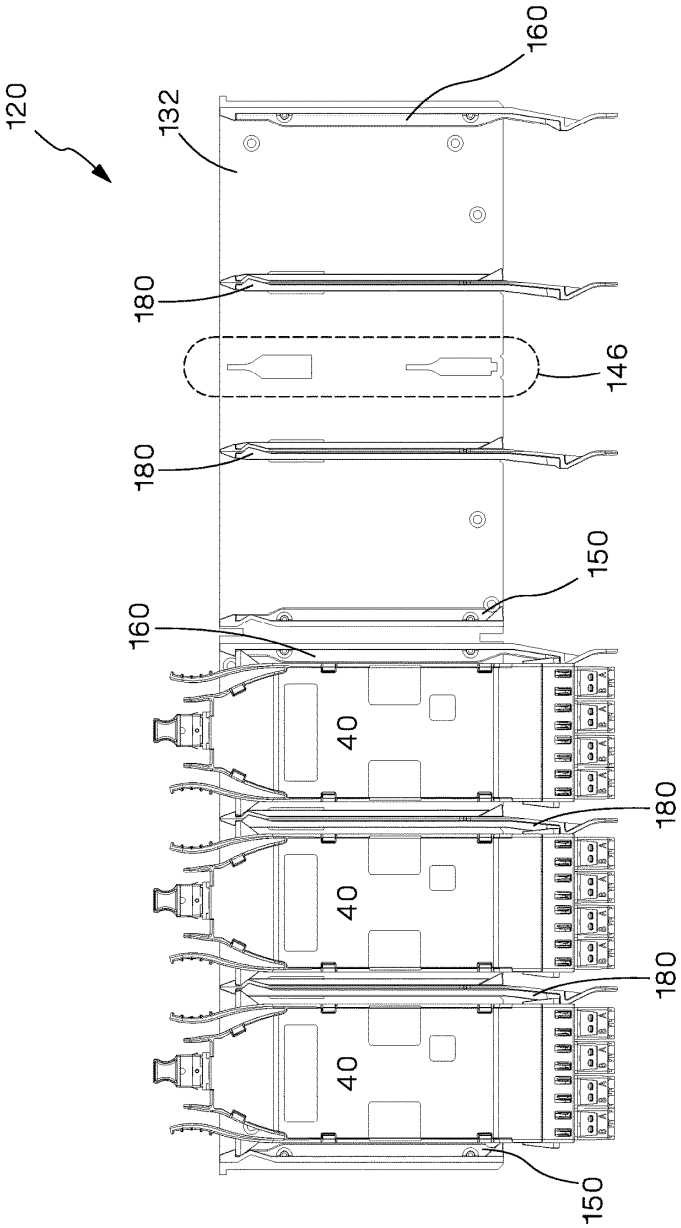

FIG.9

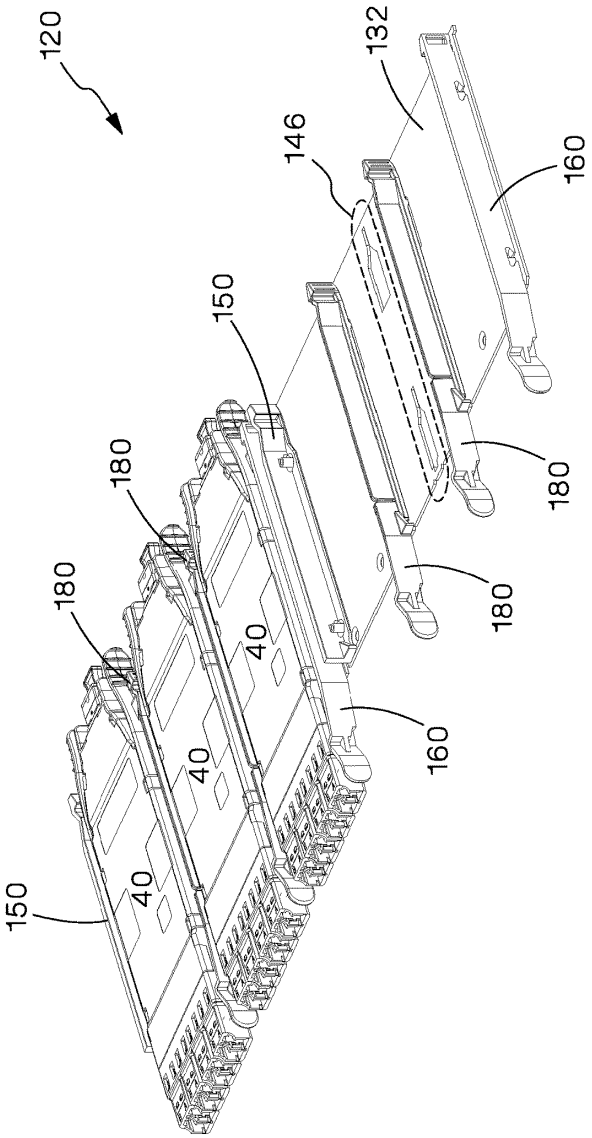

FIG. 10

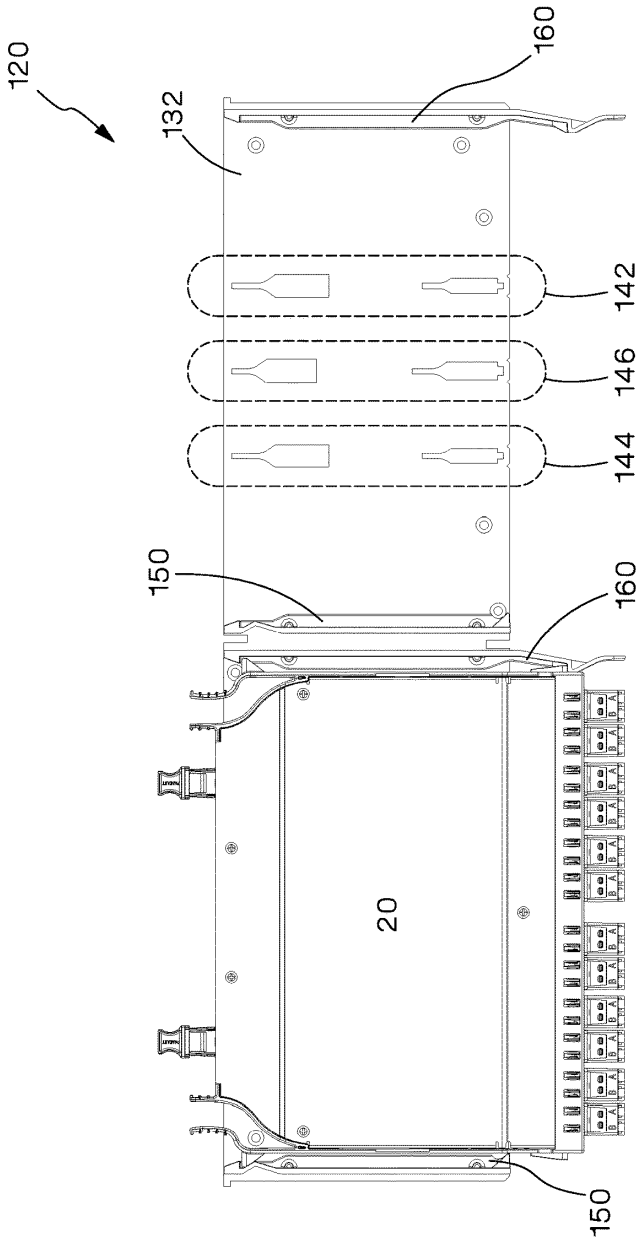

FIG. 11

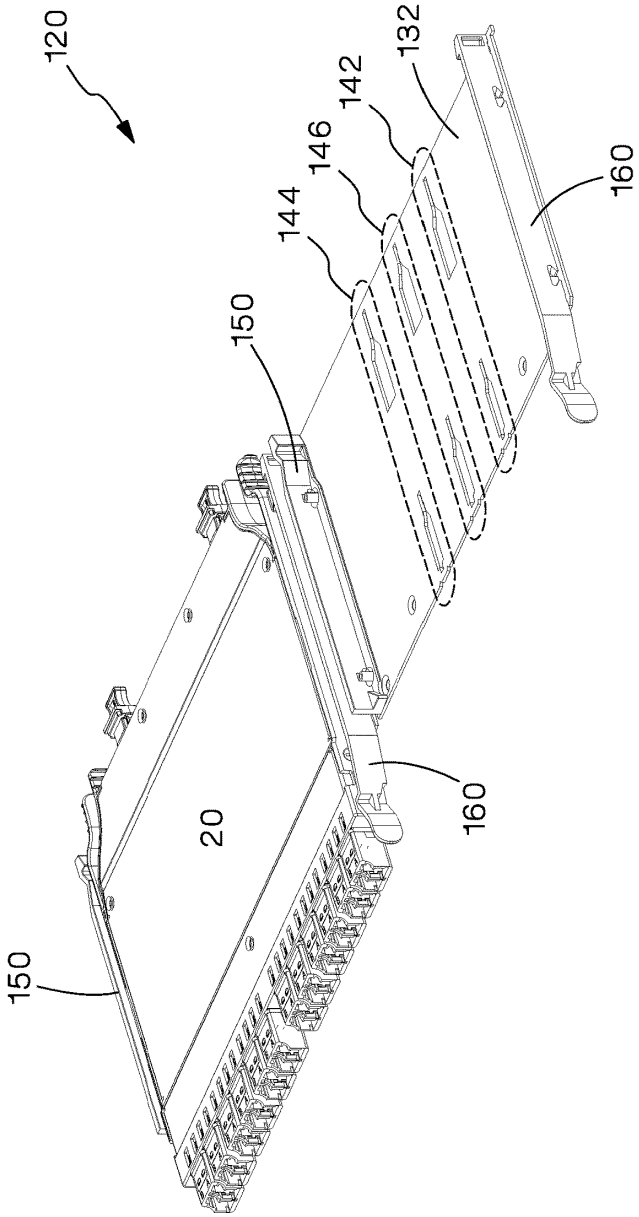

FIG.12

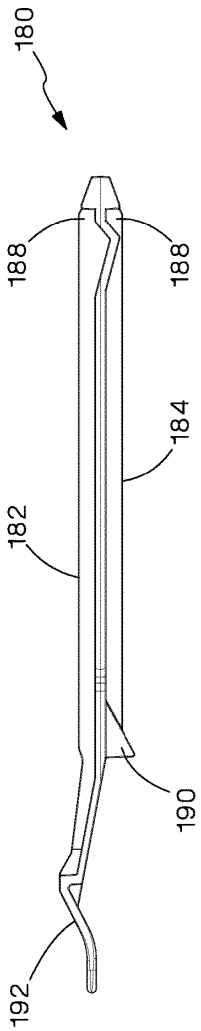

FIG.13A

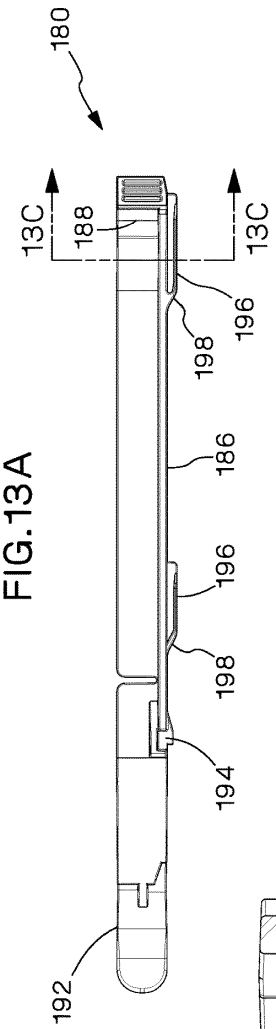

FIG.13B

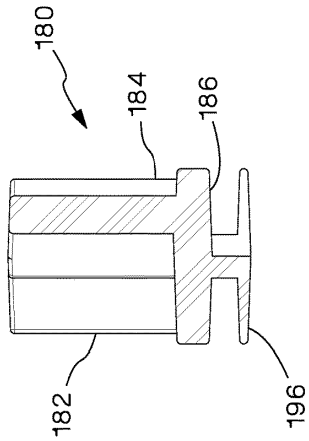

FIG.13C

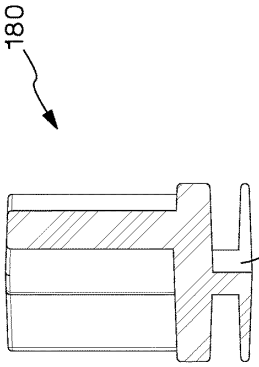

FIG.14B

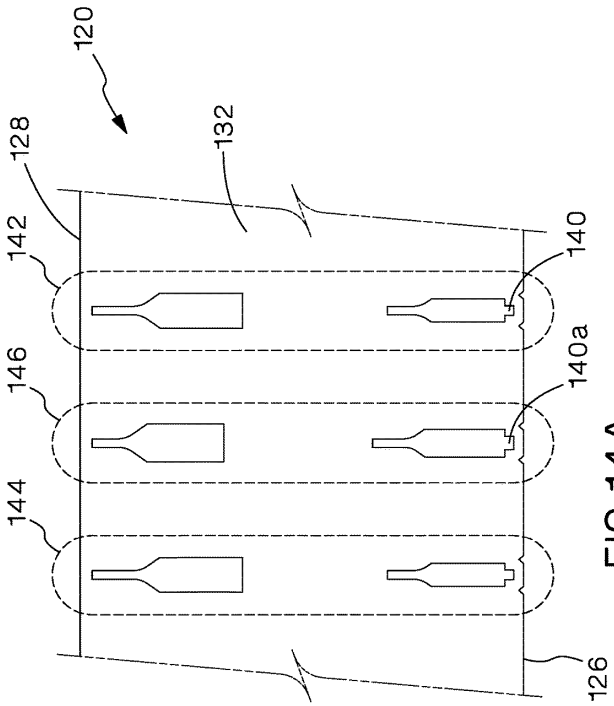

FIG.14A

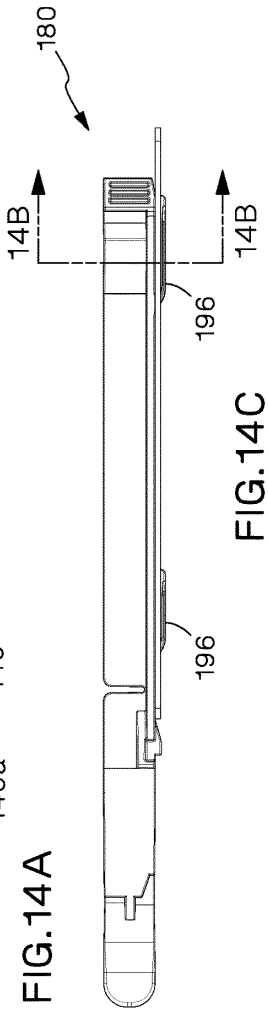

FIG.14C

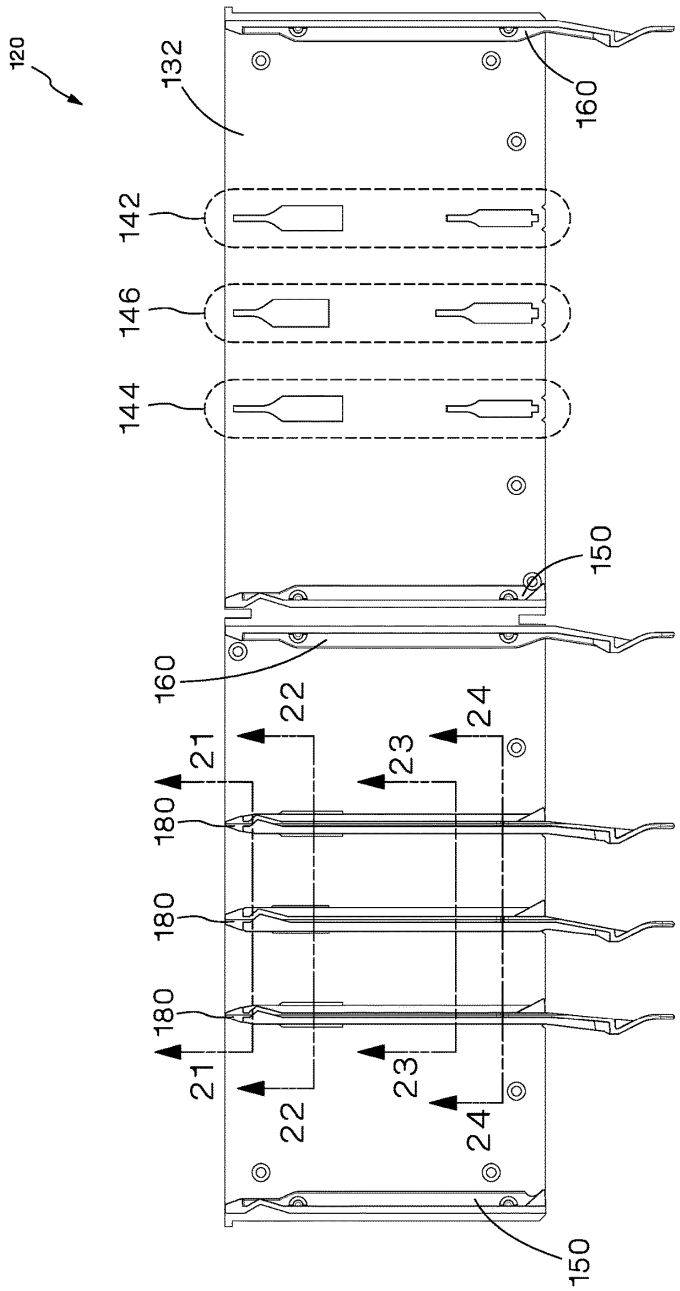
120
132
160
142
146
144
150
160
22
24
21
23
180
180
180
21
22
23
24
150

FIG.15

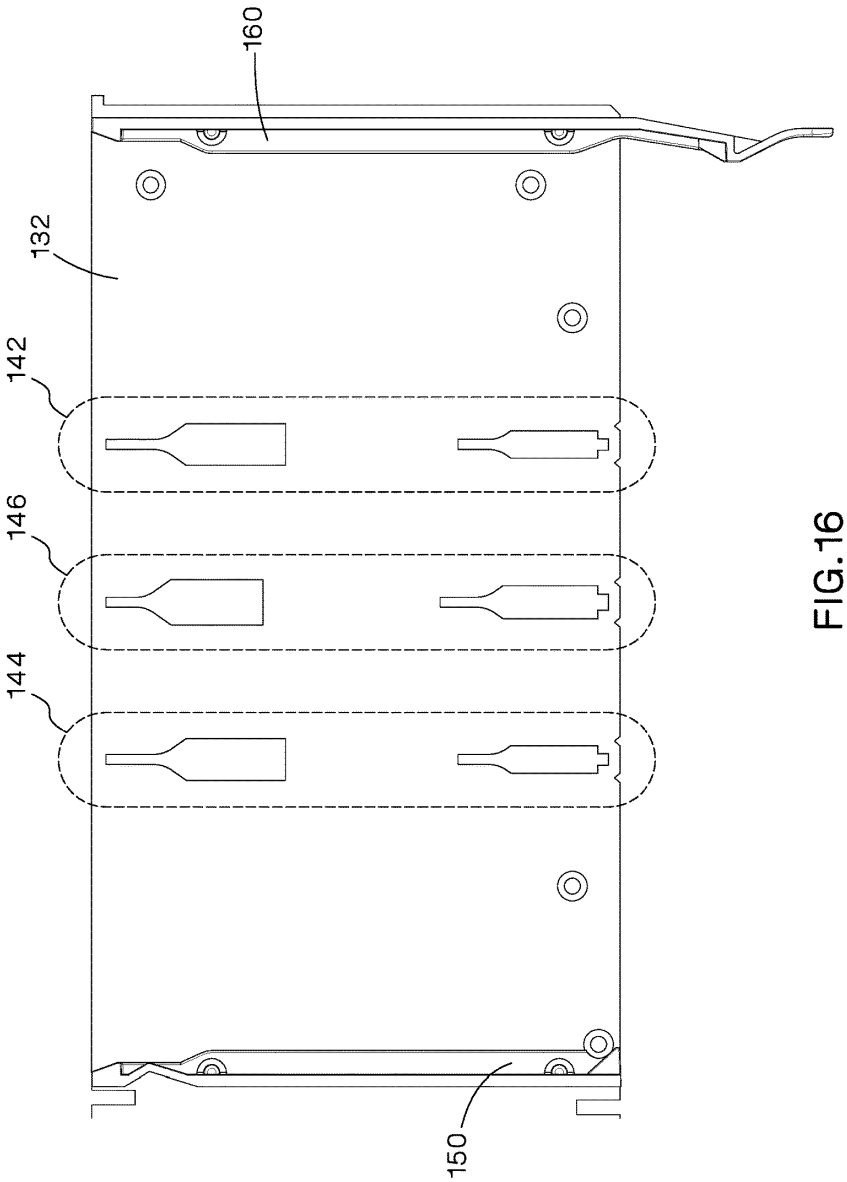

FIG.16

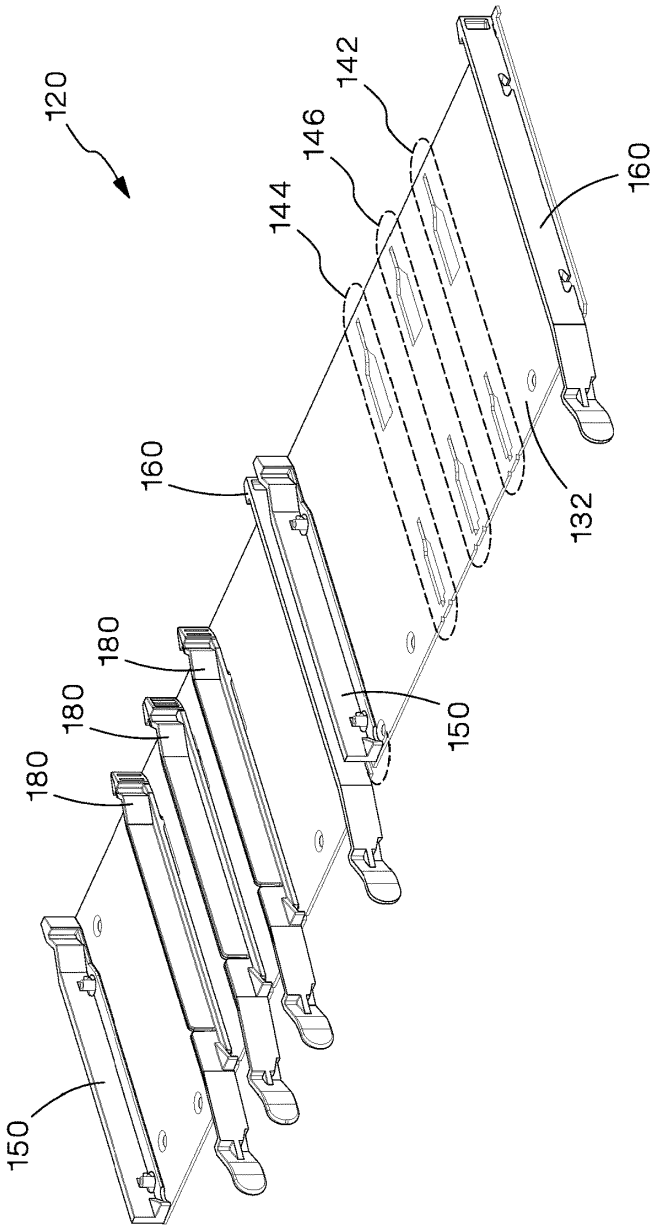

FIG.17

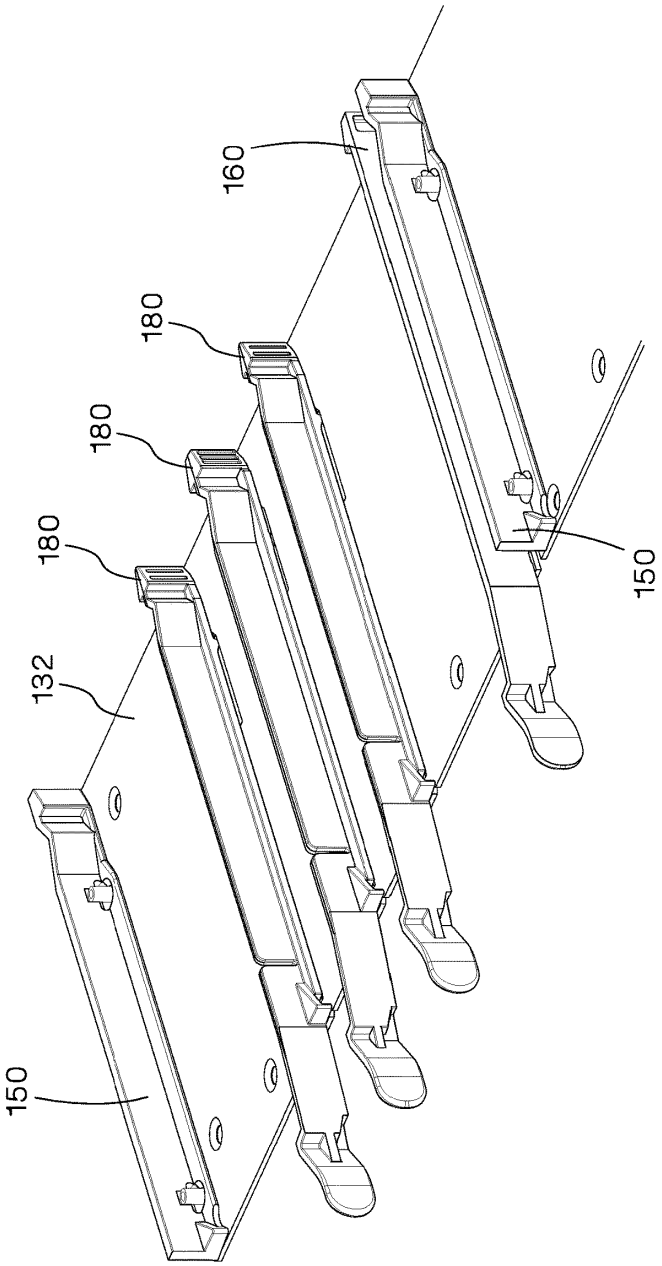

FIG.18

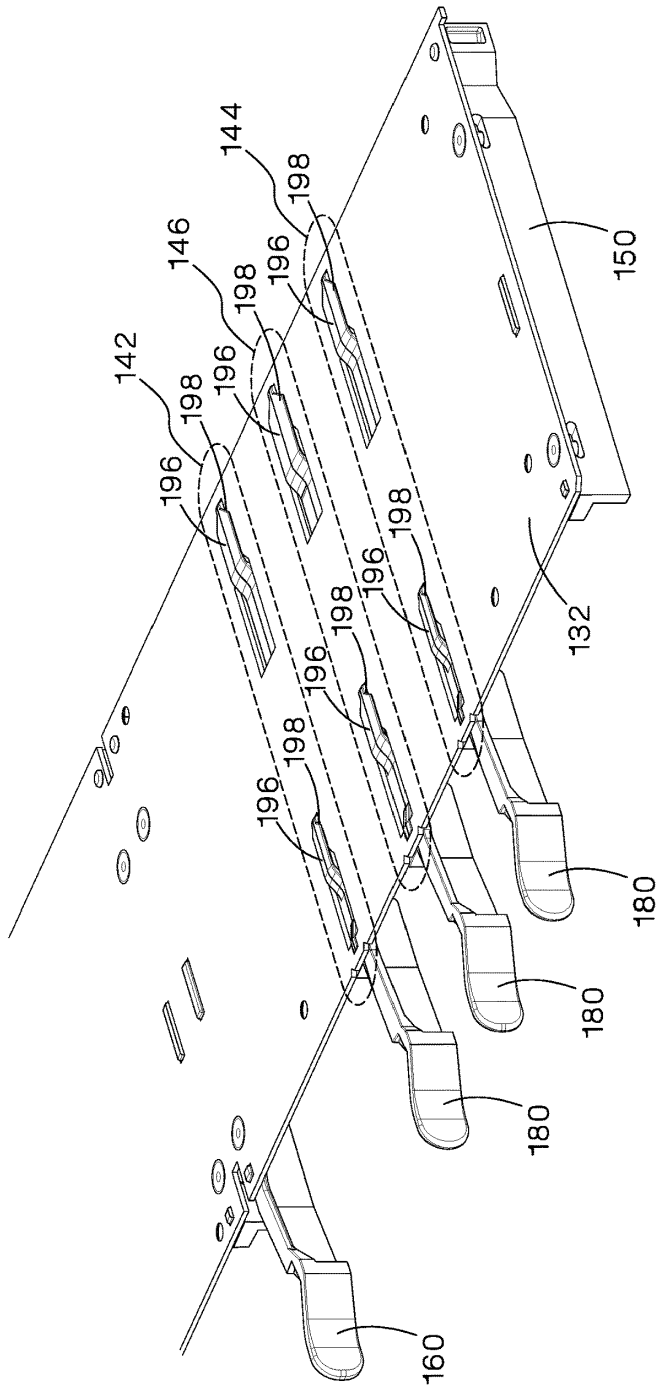

FIG.19

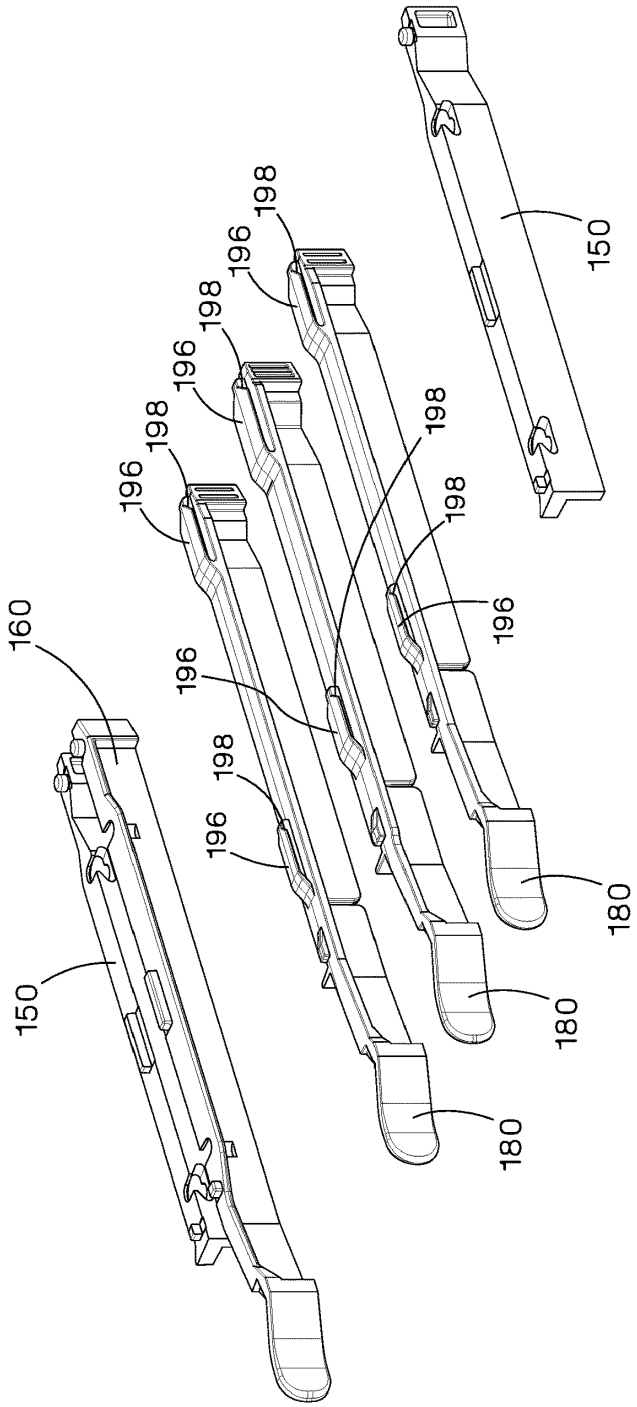
150
198
196
198
196
198
196
198
198
196
160
196
198
196
180
180
180
150

FIG.20

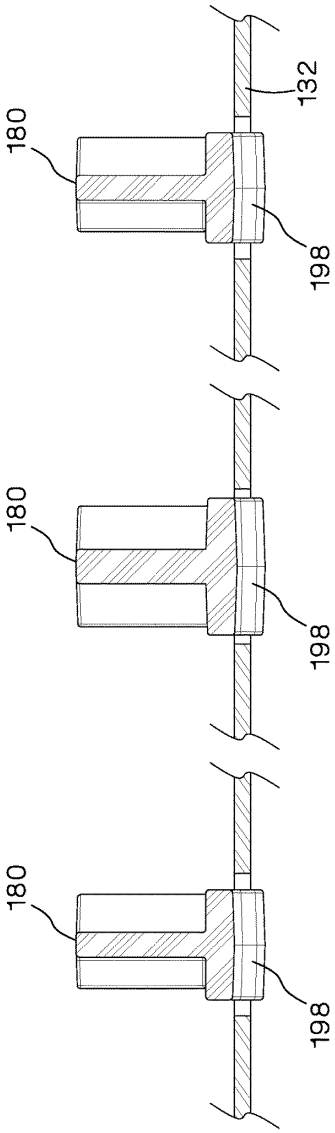

FIG.21

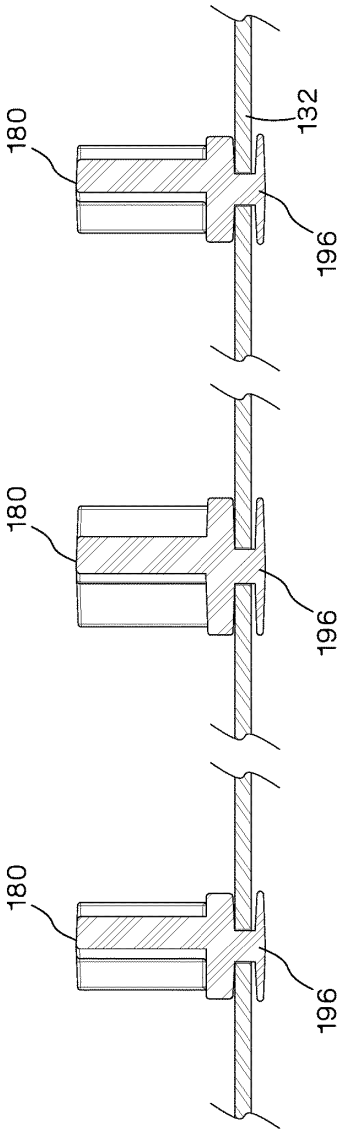

FIG.22

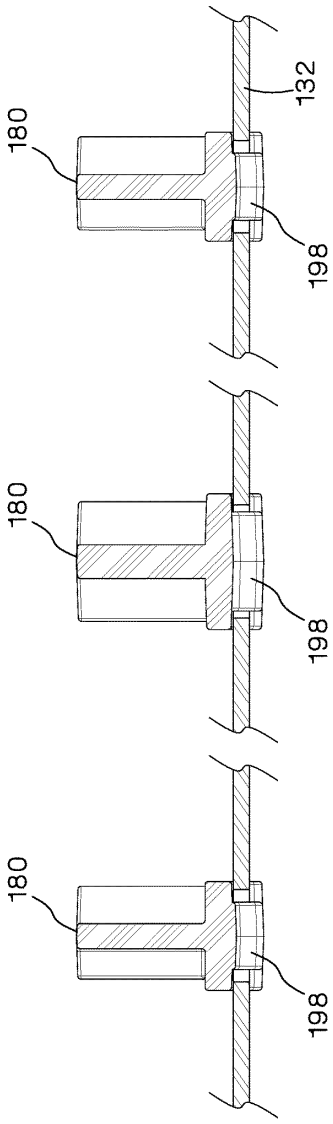

FIG.23

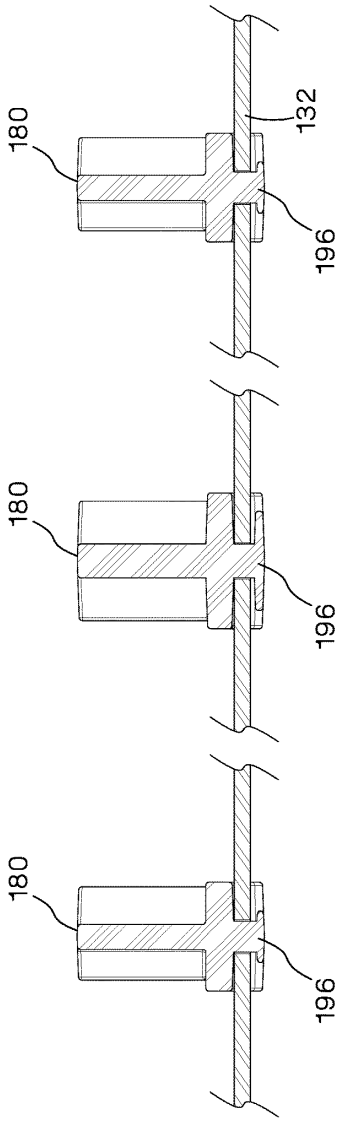

FIG.24

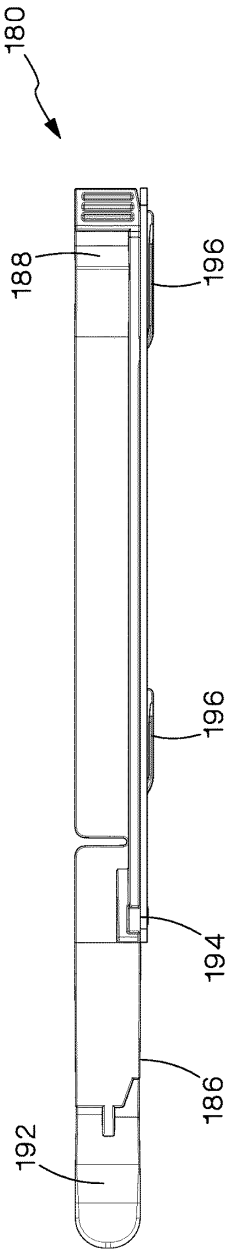

FIG.25A

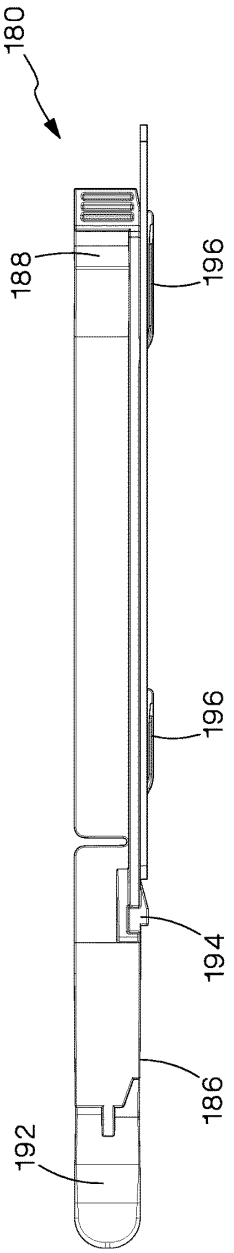

FIG.25B

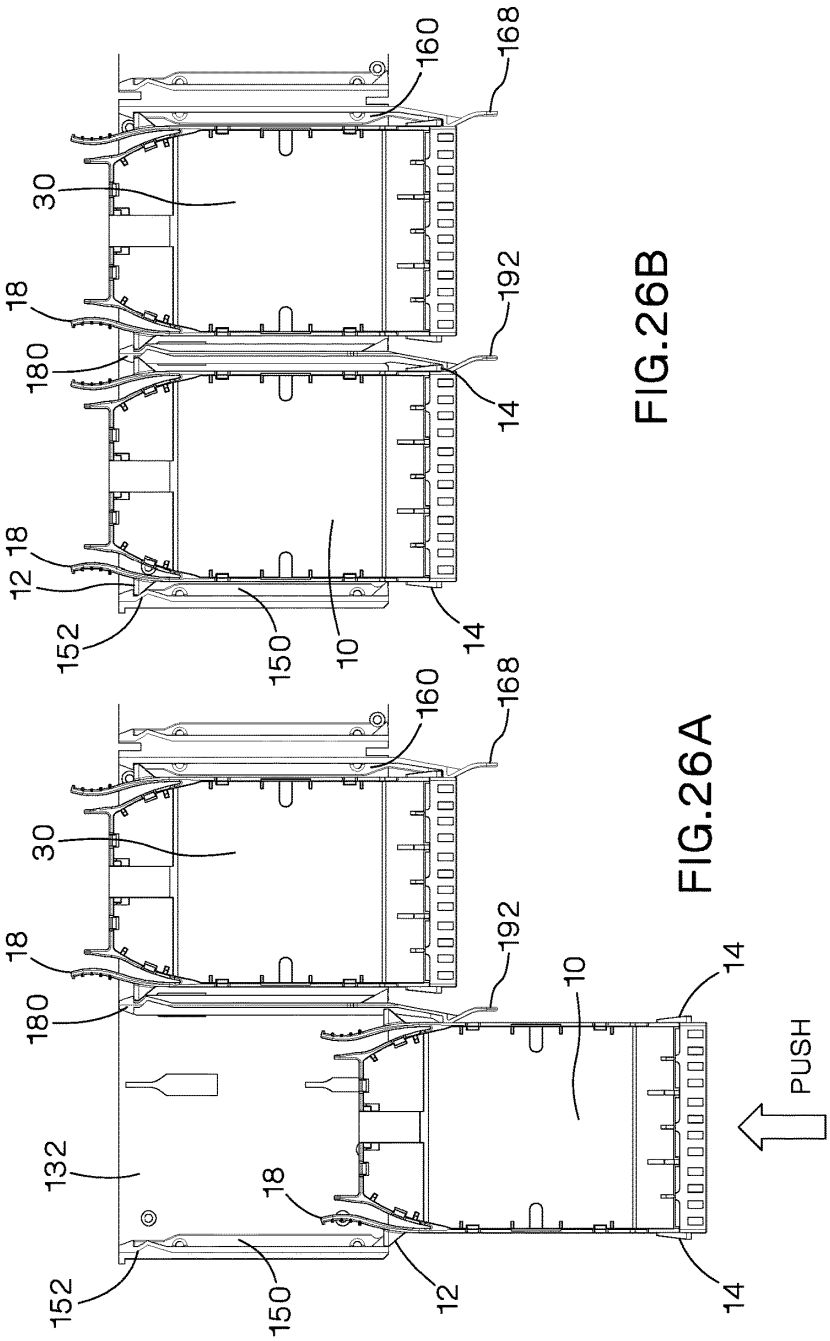

FIG.26B

FIG.26A

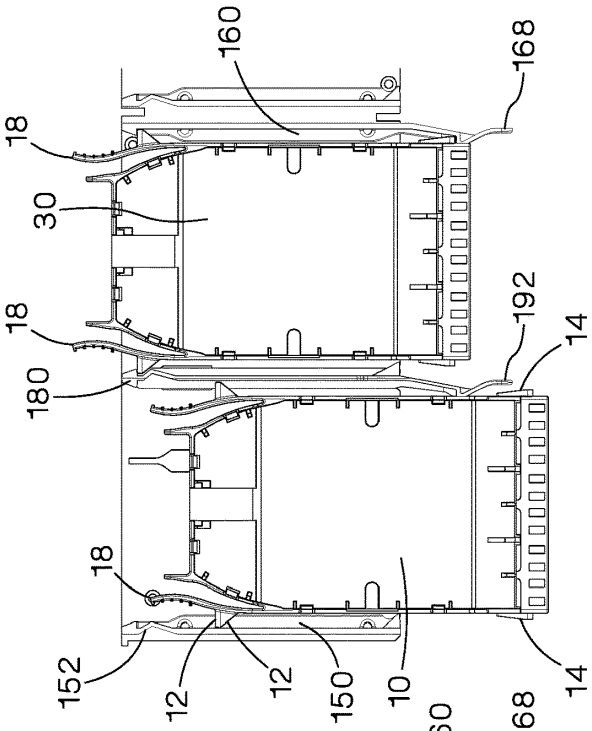

FIG.27B

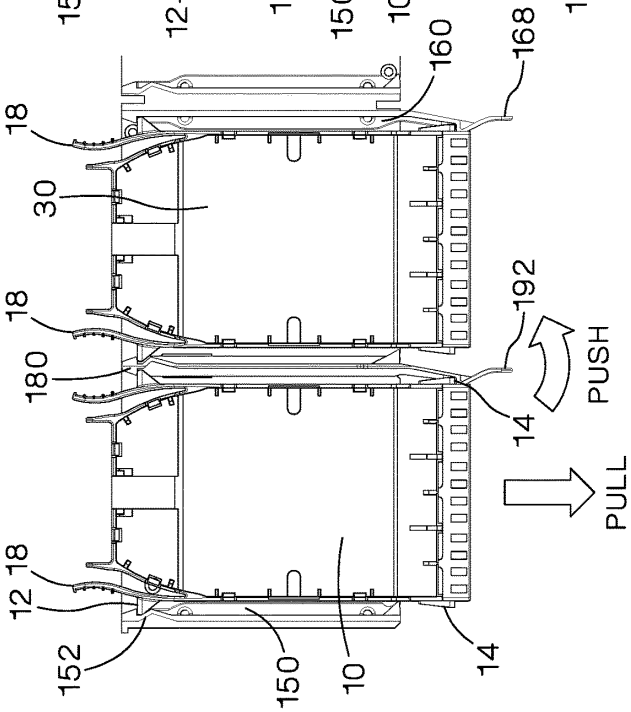

FIG.27A

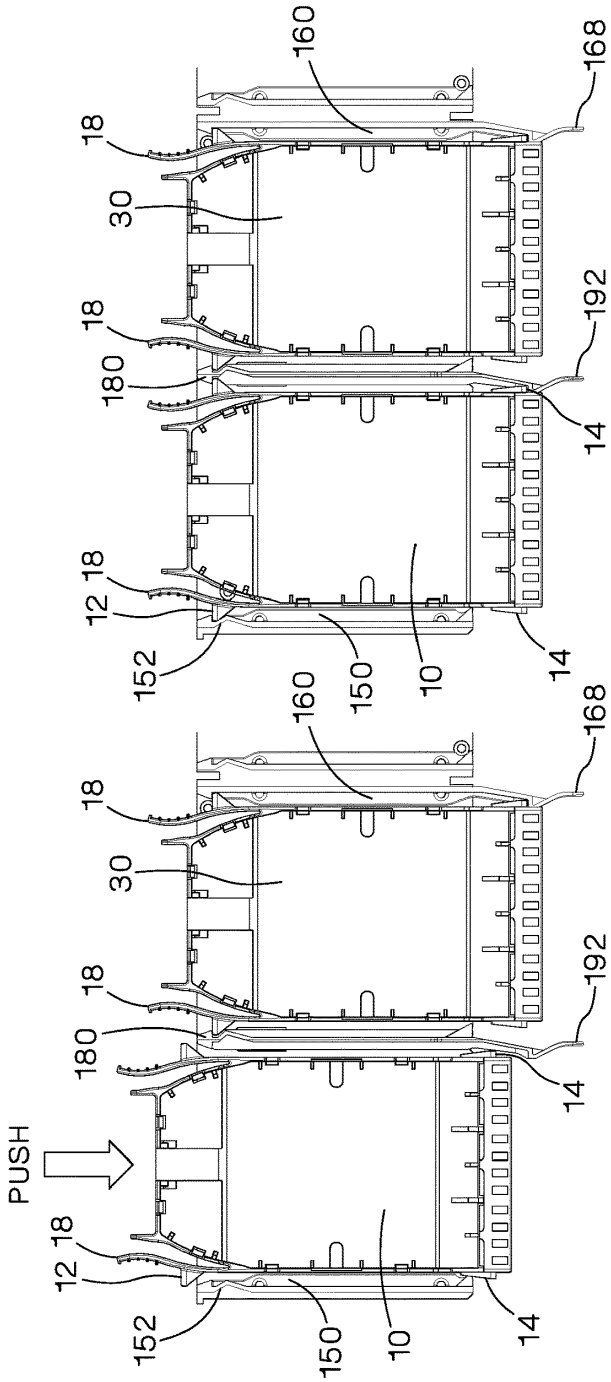

FIG.28B

FIG.28A

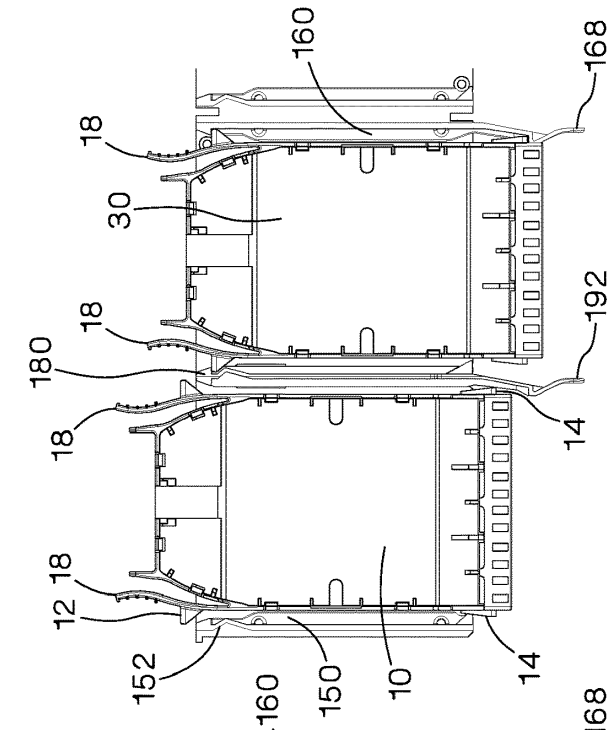

FIG.29B

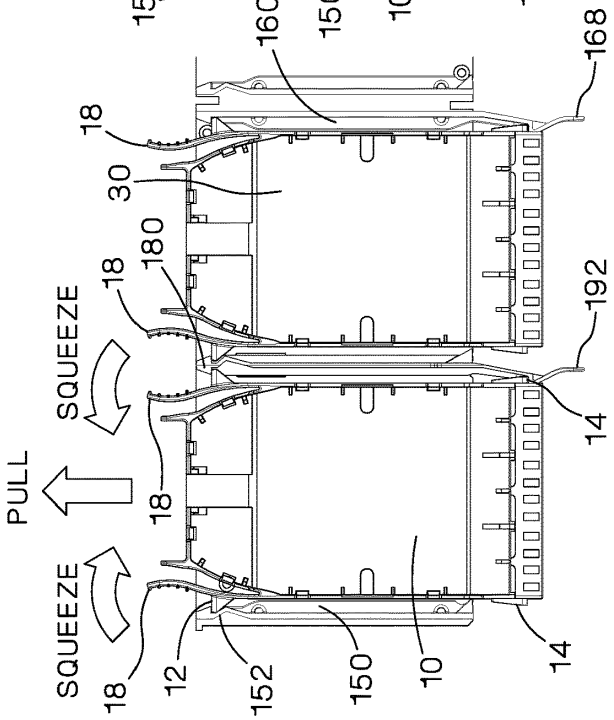

FIG.29A

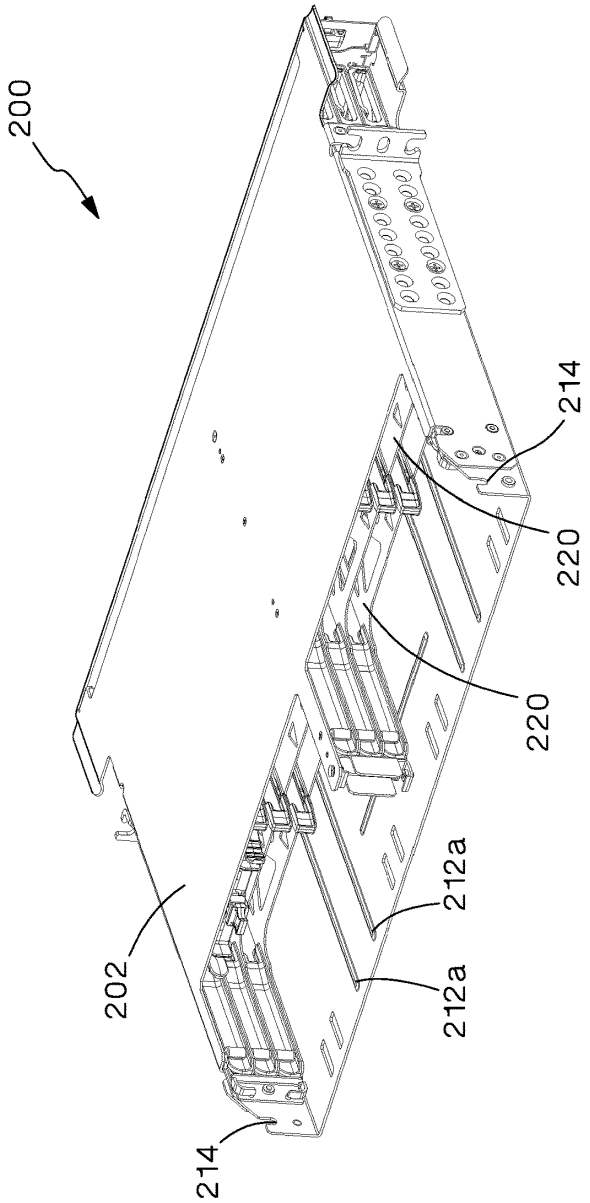

FIG.30

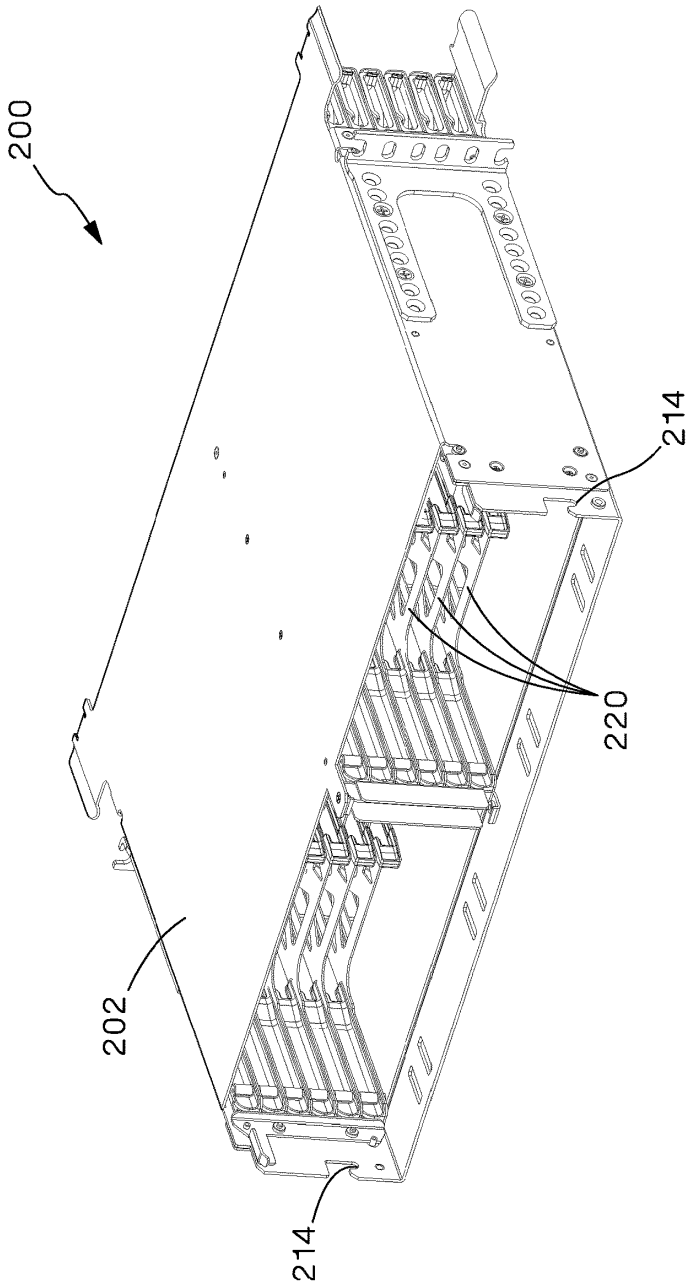

FIG.31

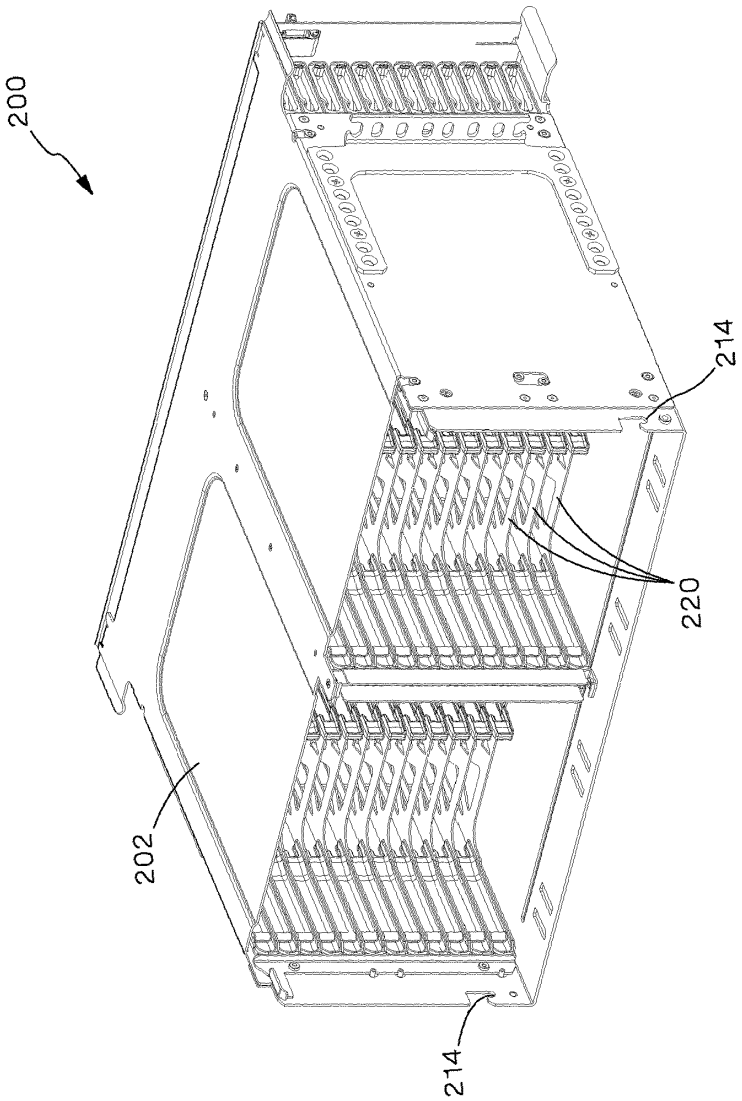

FIG.32

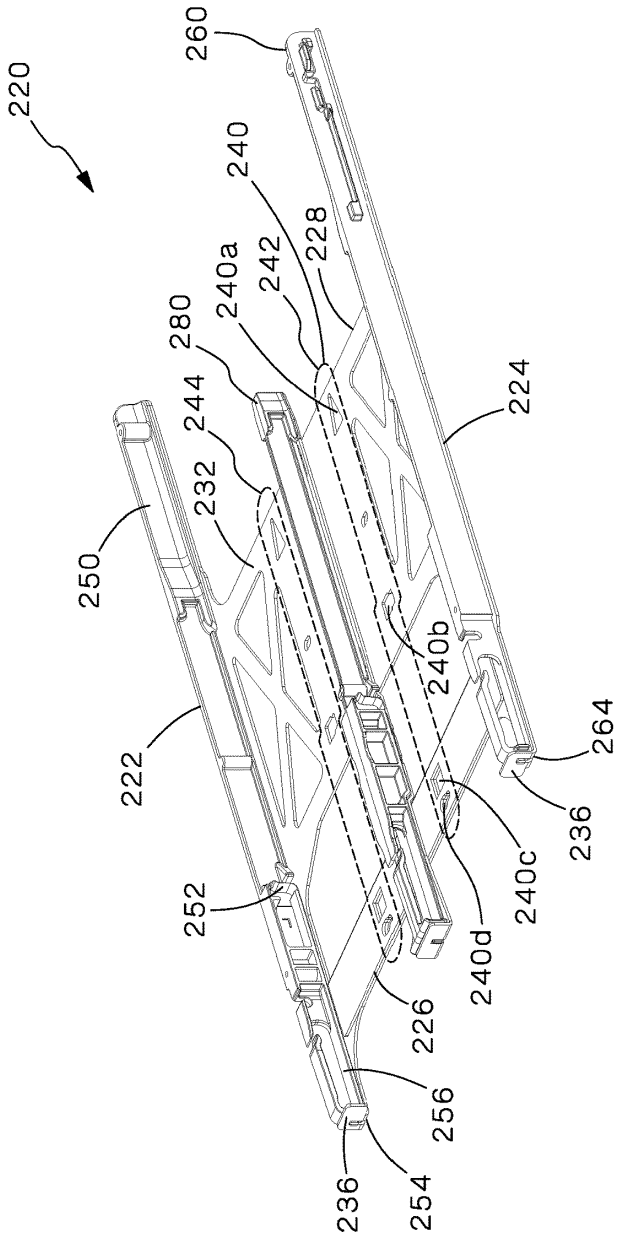
220
260
240
228
242
240a
280
244
232
250
222
252
226
256
236
254
224
240b
264
236
240c
240d

FIG.33

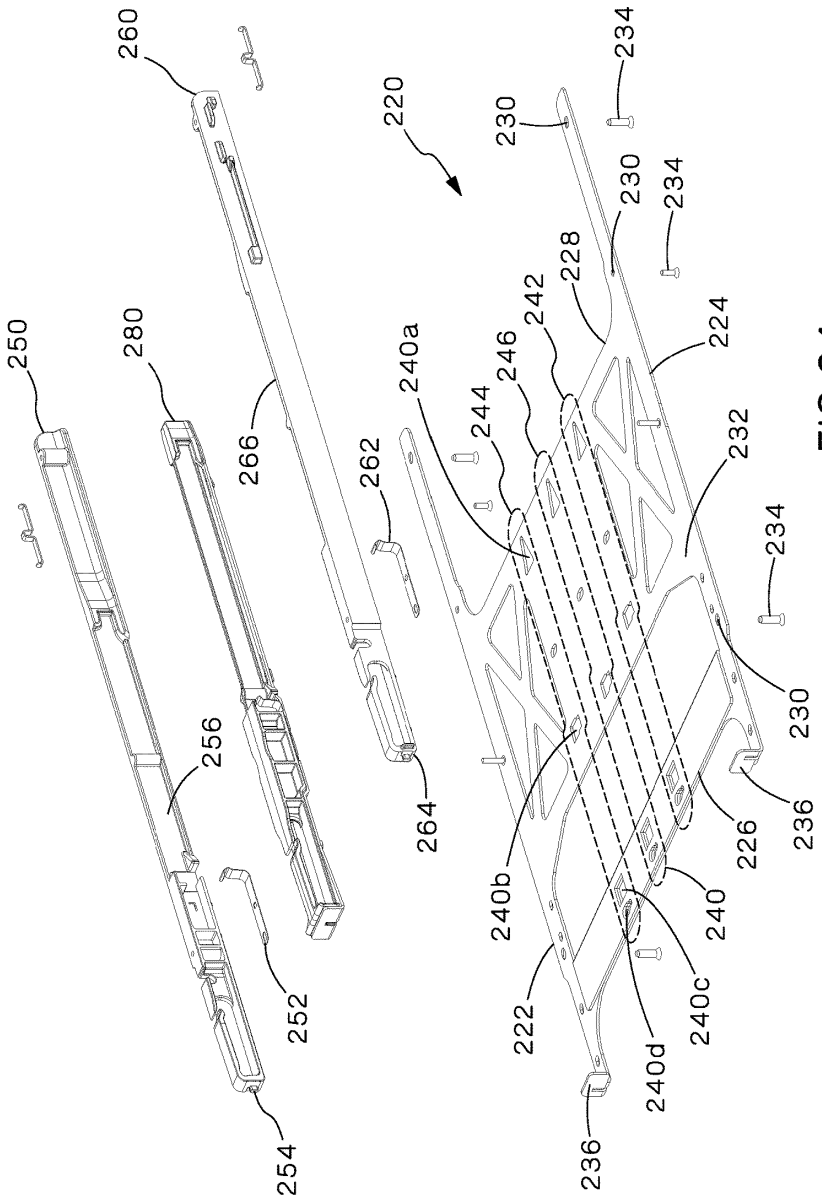
260
220
230
234
230
234
228
242
224
250
280
240a
246
244
266
262
232
234
230
256
264
236
226
240b
240
240c
222
240d
252
254
236

FIG.34

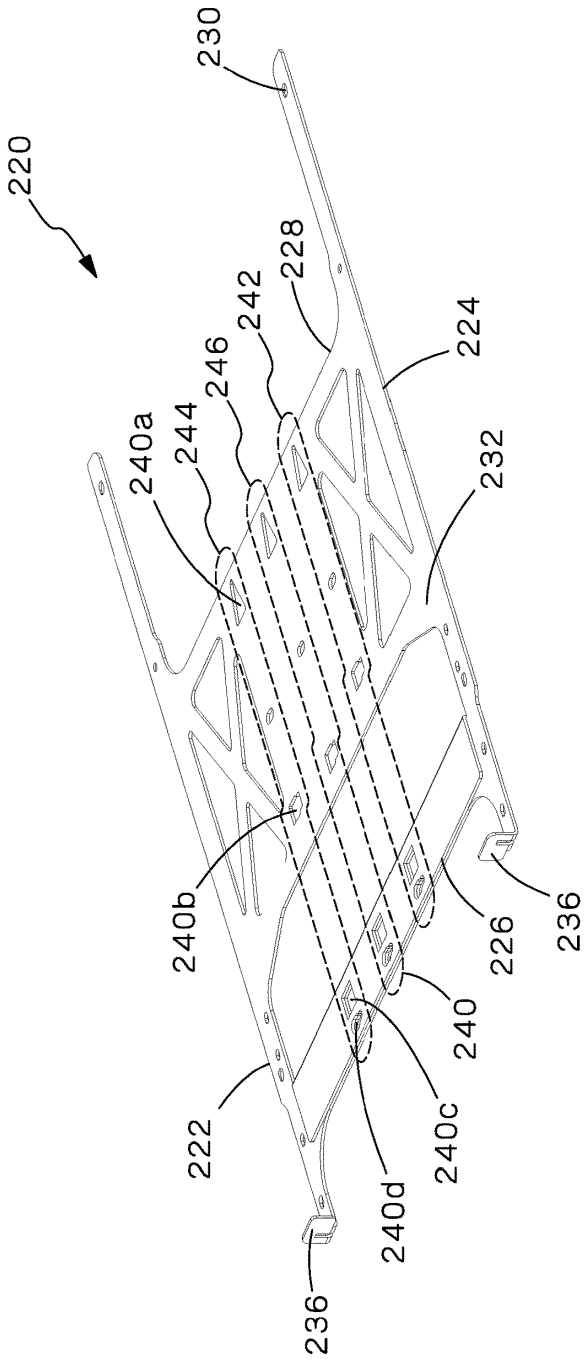
220
230
228
242
246
244
240a
224
232
240b
226
236
240
240c
222
240d
236

FIG.35

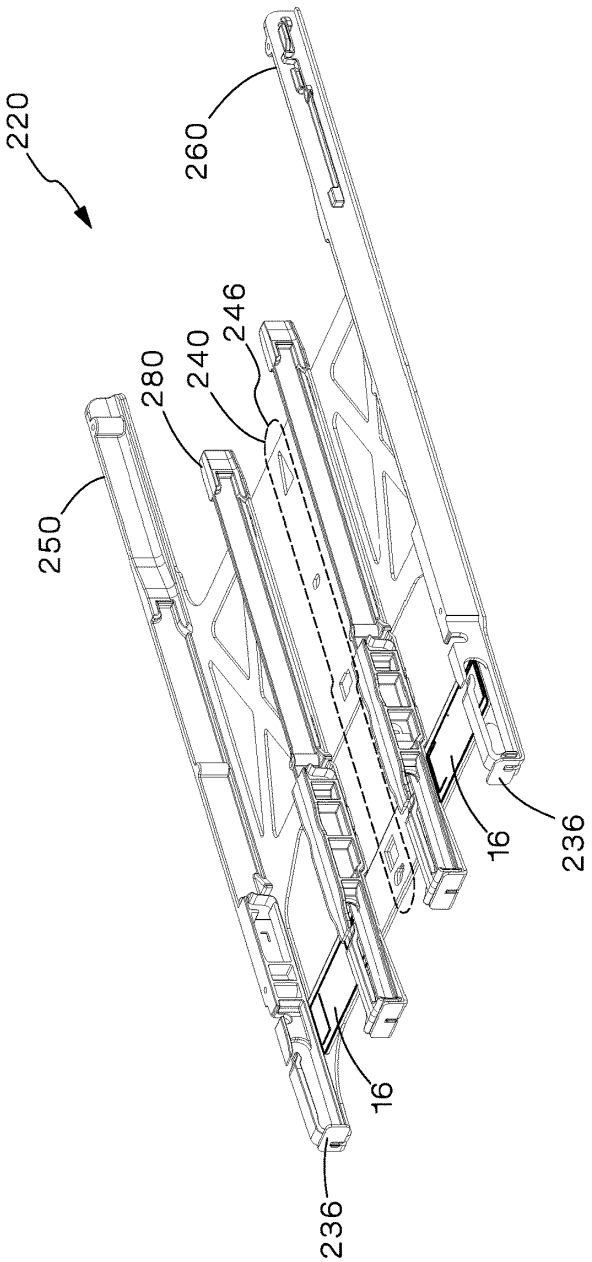

FIG.36

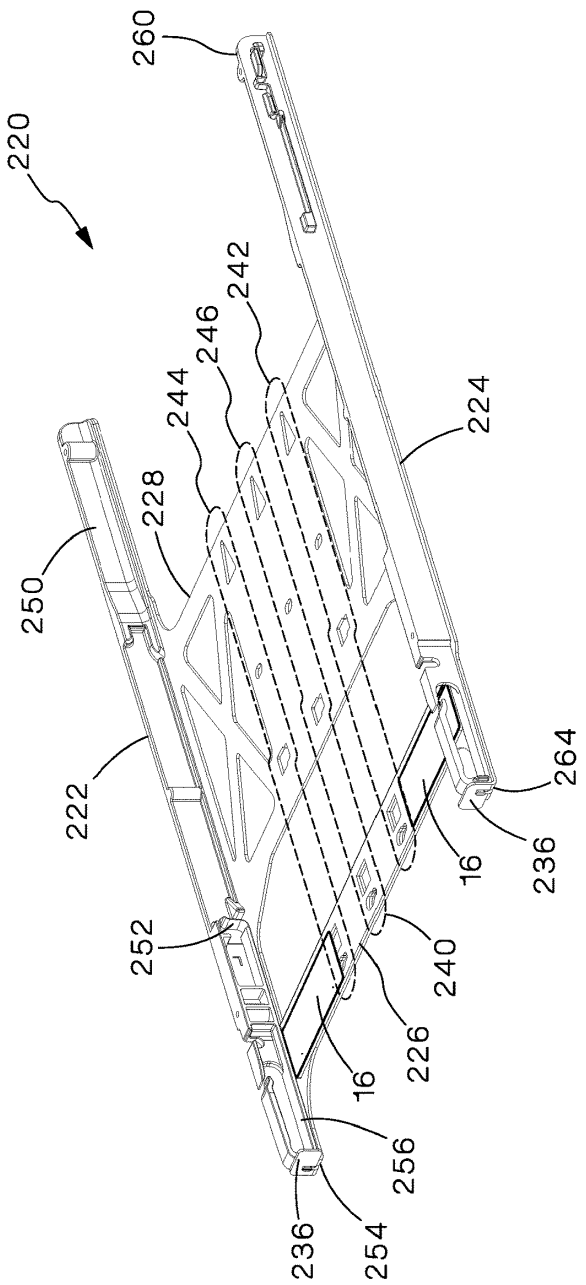
220
260
242
246
244
228
224
250
222
264
236
16
252
240
226
16
256
236
254

FIG.37

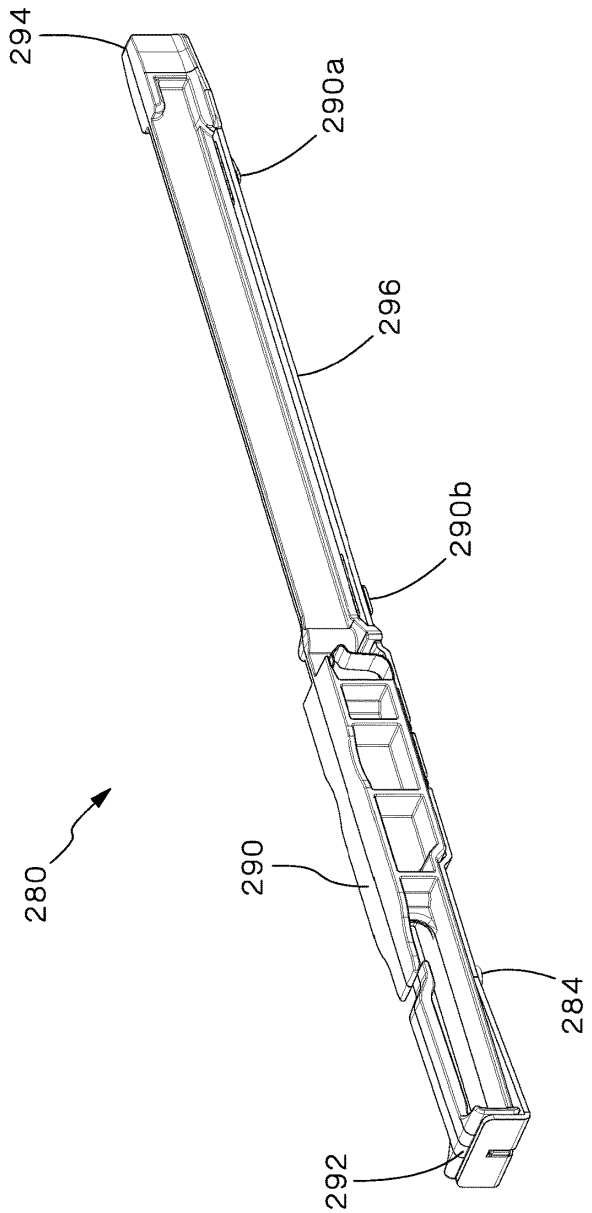

FIG.38

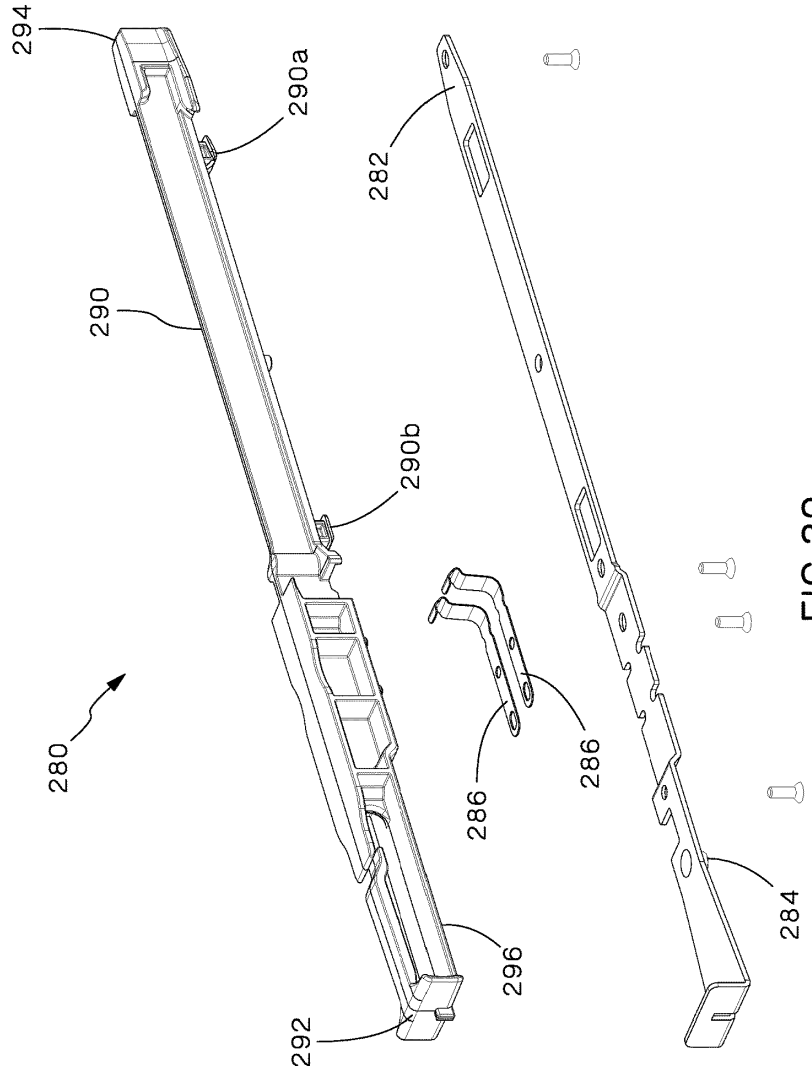

FIG.39

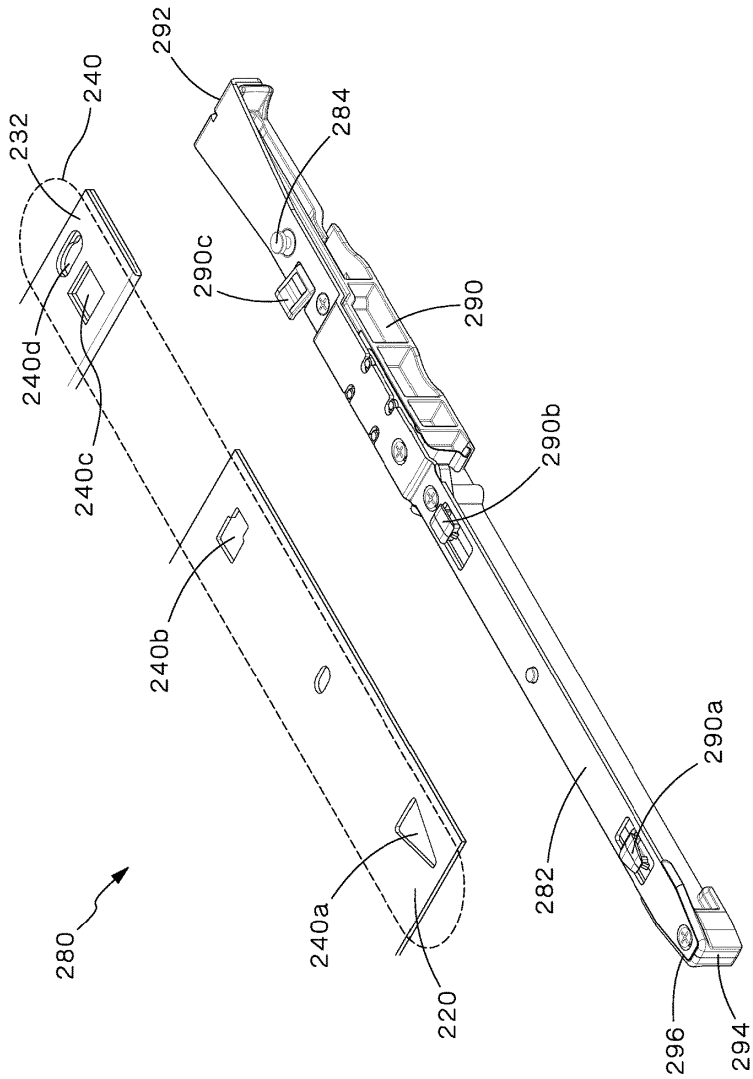
280
232
240
240d
240c
240b
240a
220
292
284
290c
290
290b
282
290a
296
294

FIG.40

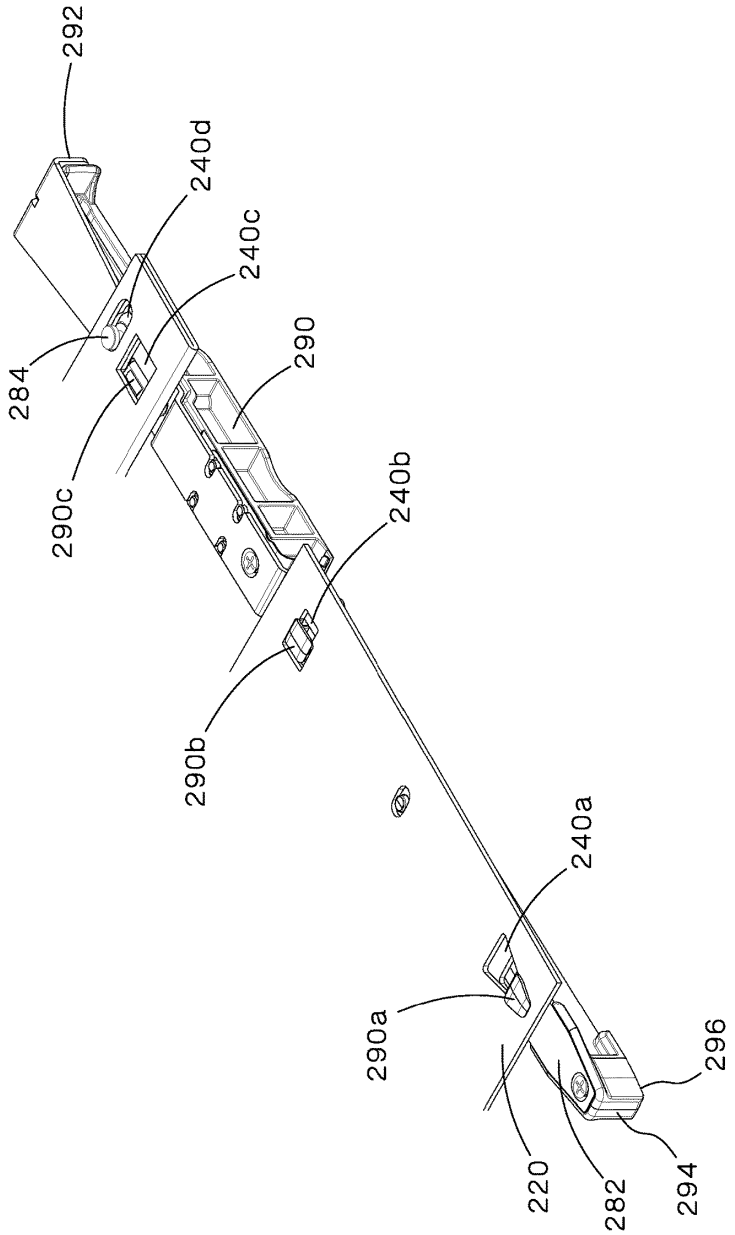

FIG.41

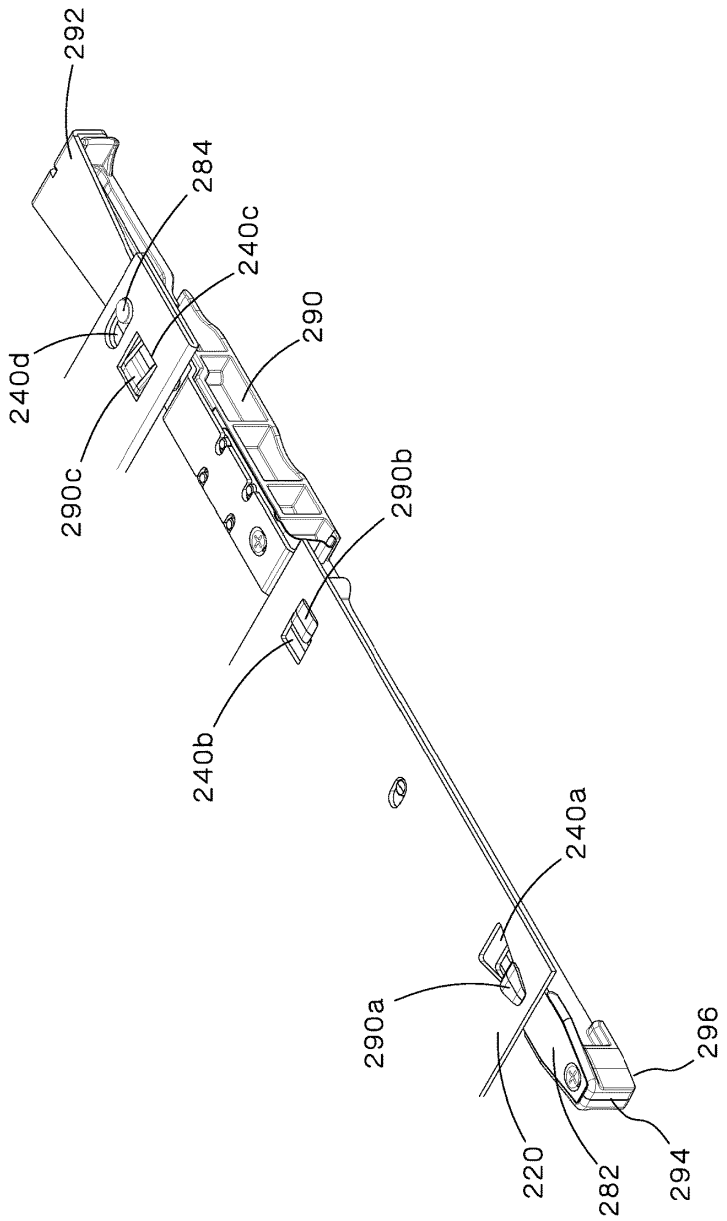

FIG.42

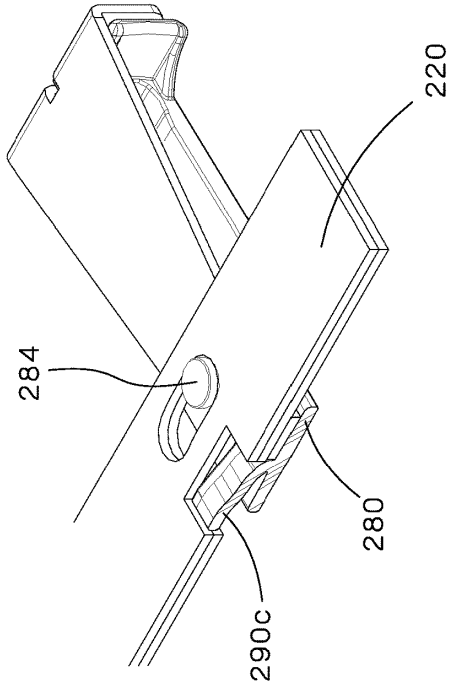

FIG.43

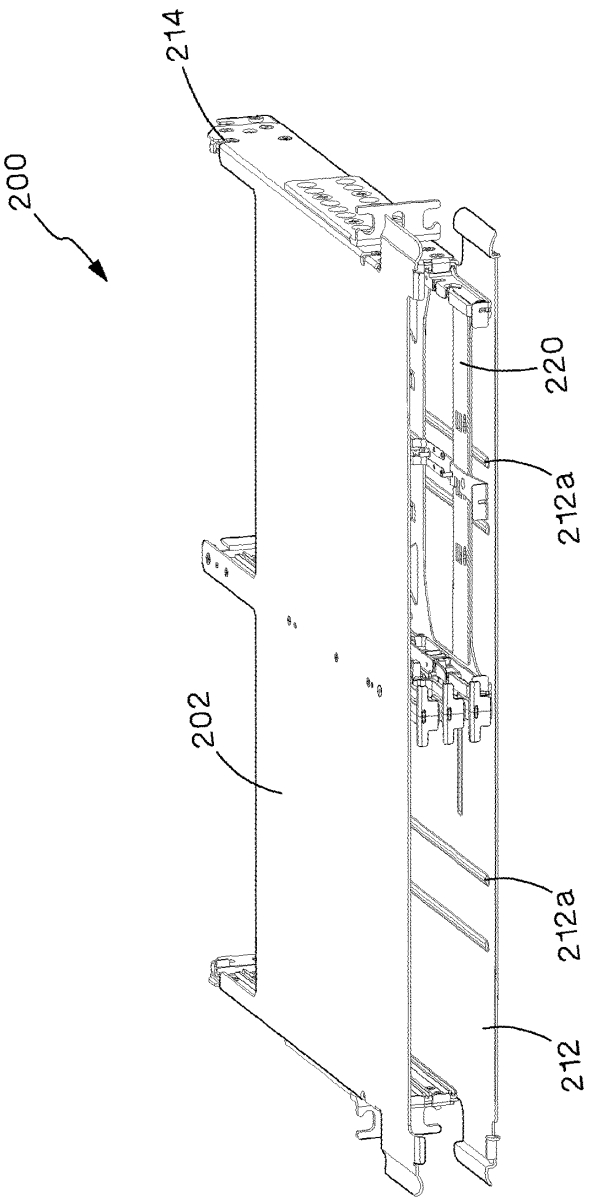

FIG.44

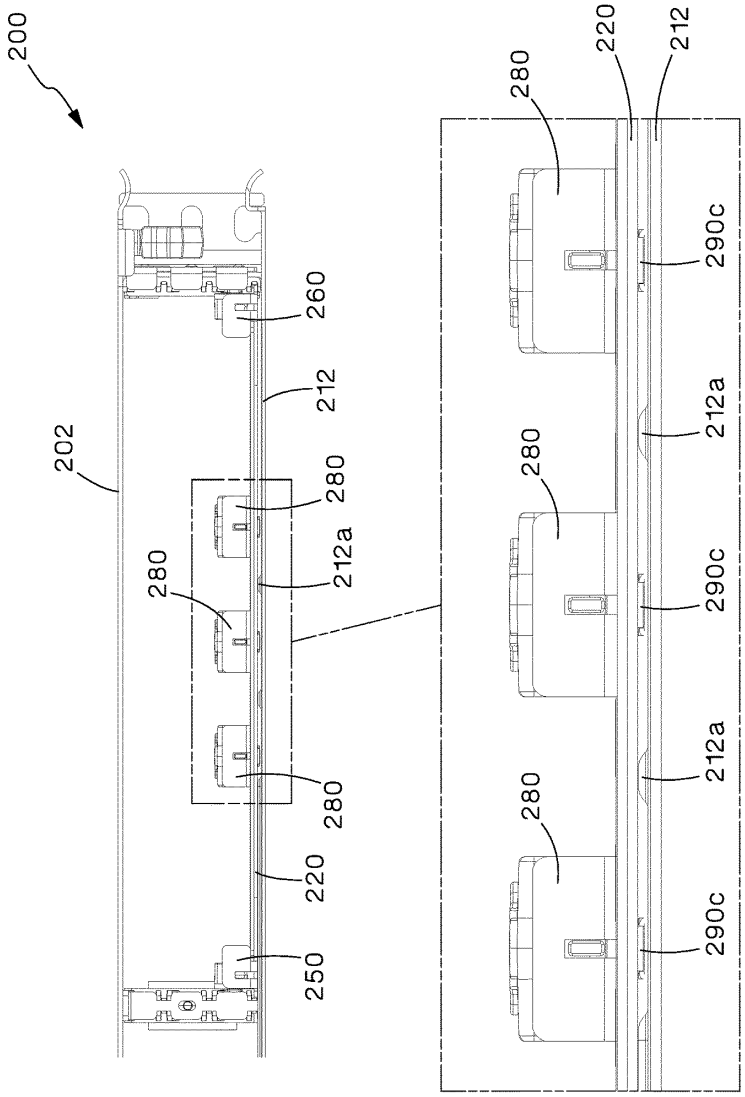
200
202
260
212
280
212a
280
280
220
250
280
220
212
290c
212a
280
290c
212a
280
290c

FIG.45

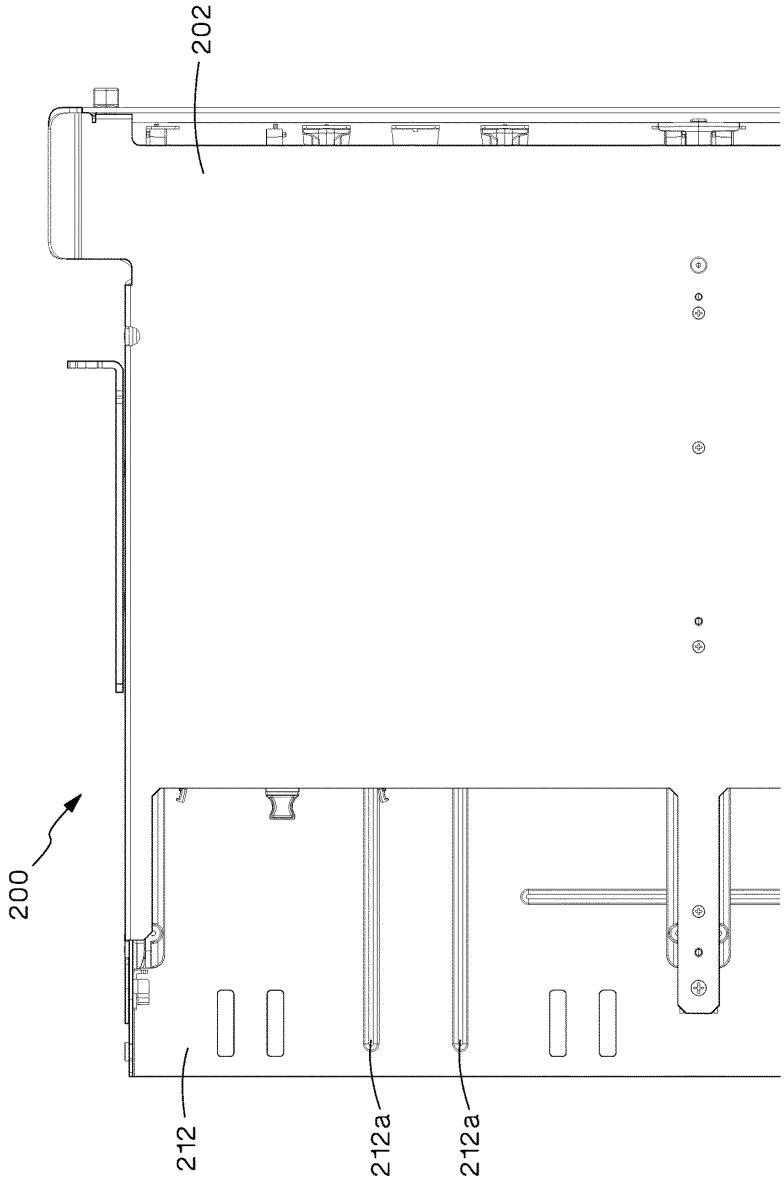

FIG.46

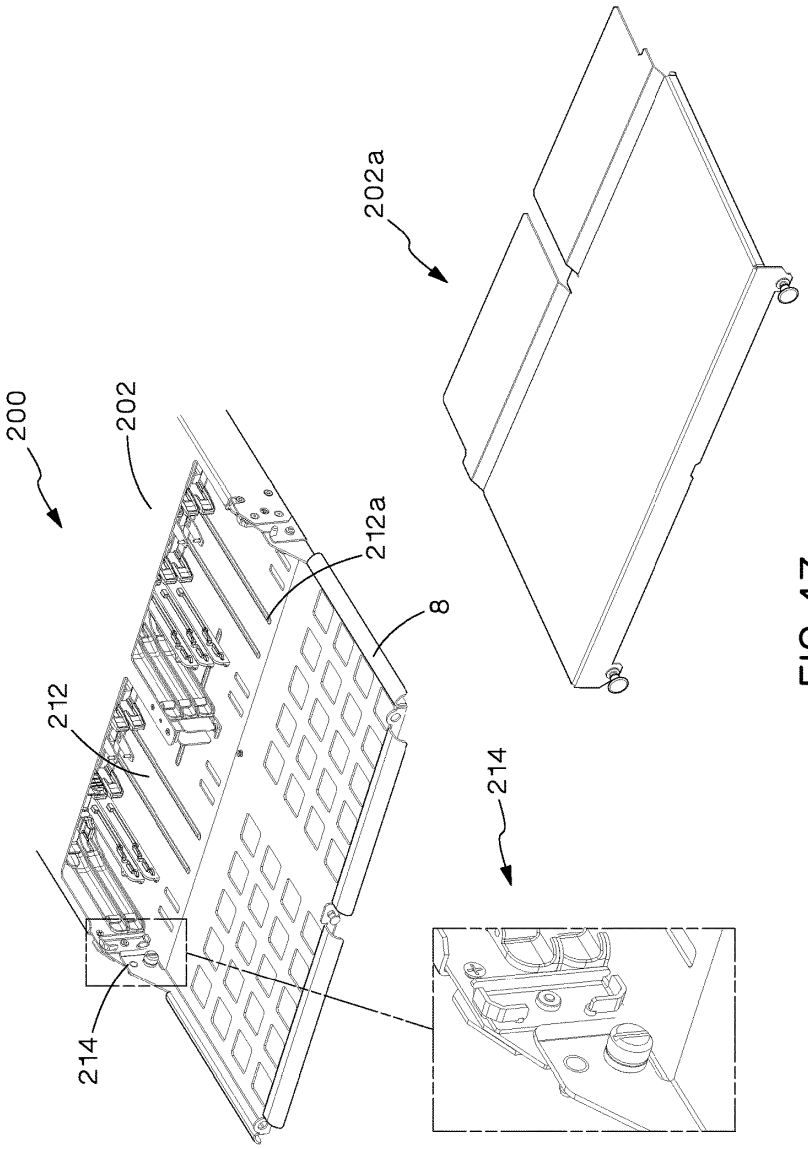

FIG. 47

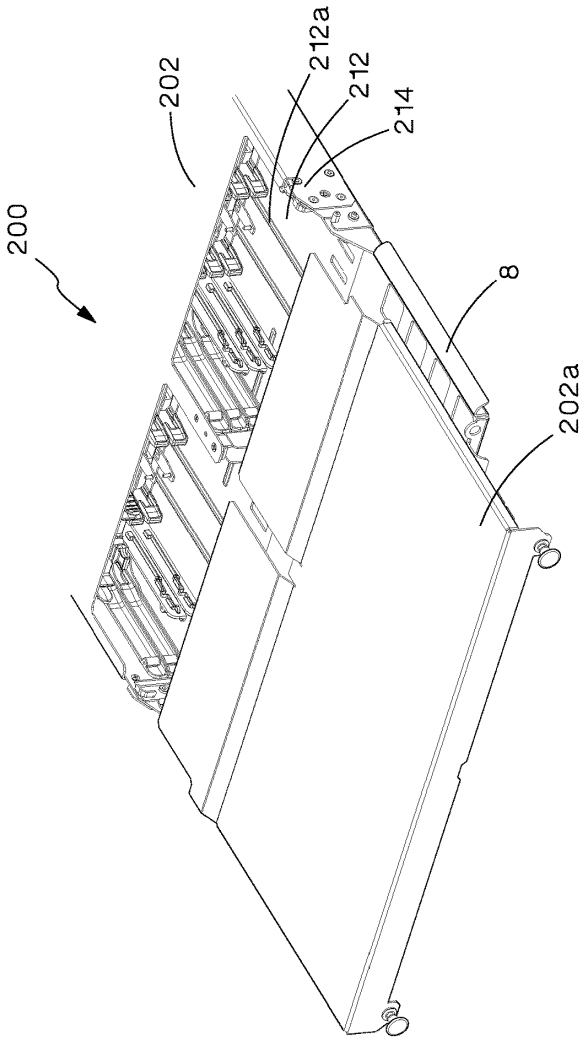

FIG.48

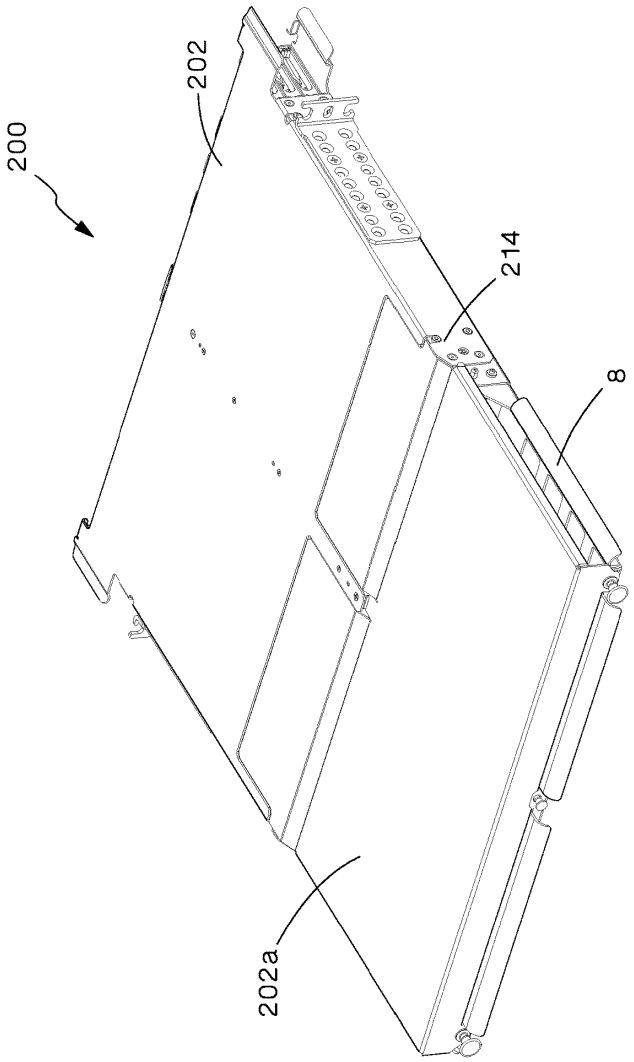

FIG.49

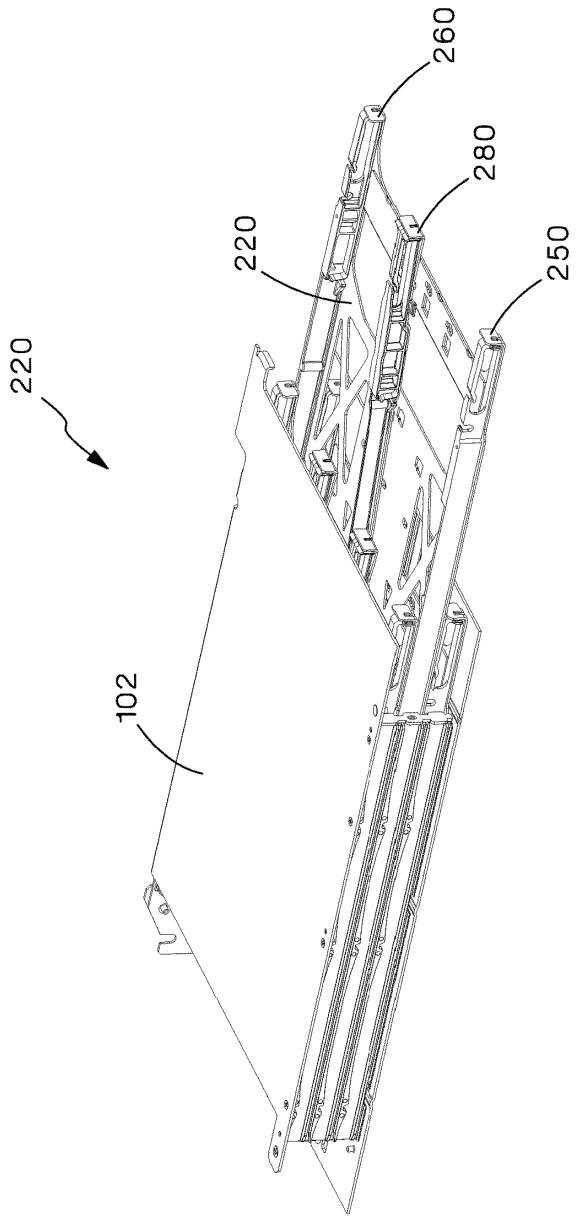

FIG.50

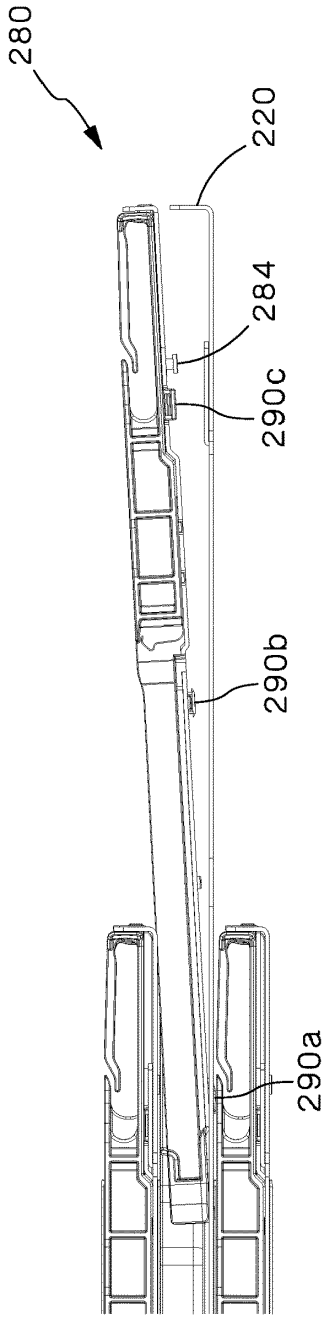

FIG.51

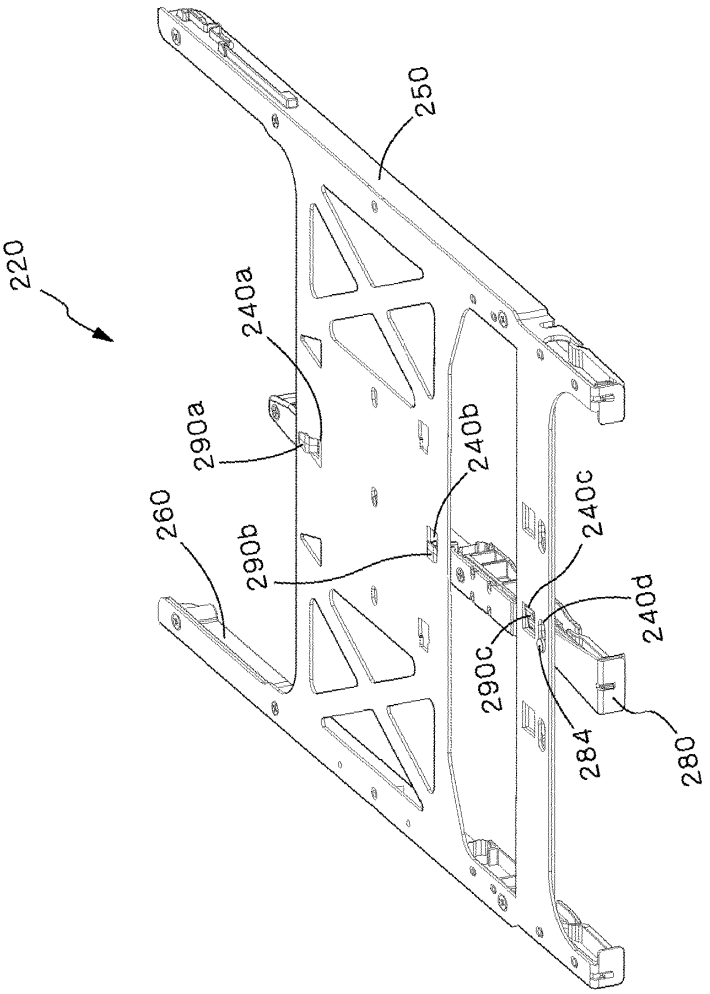

FIG.52

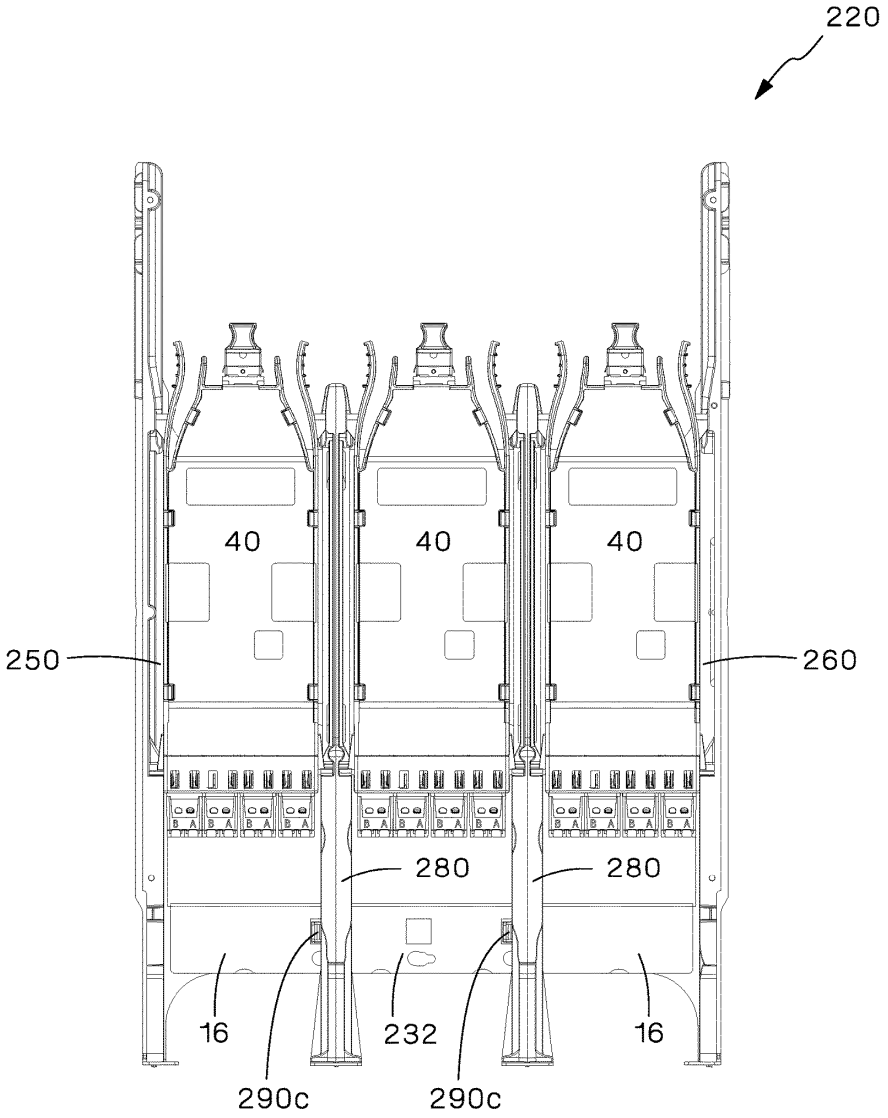

FIG.53

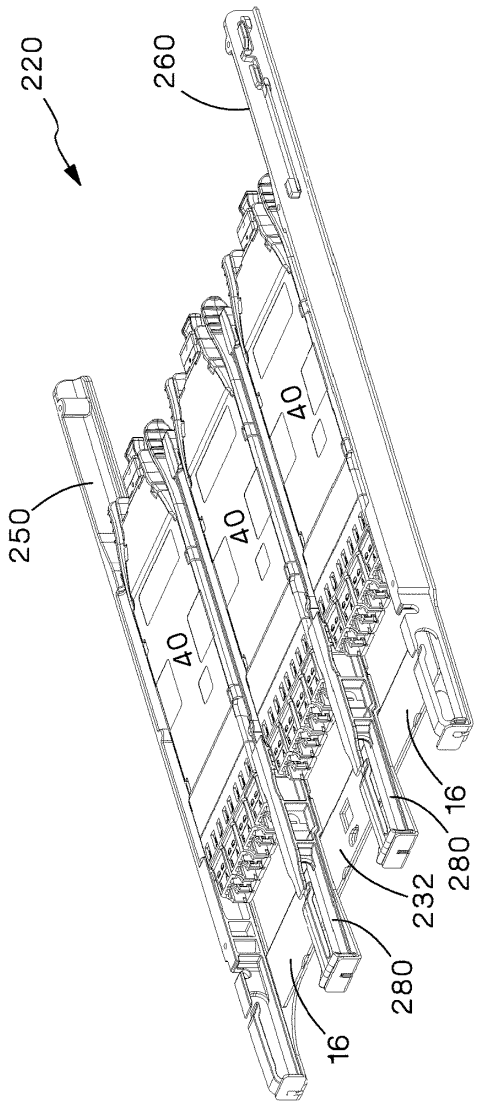

FIG.54

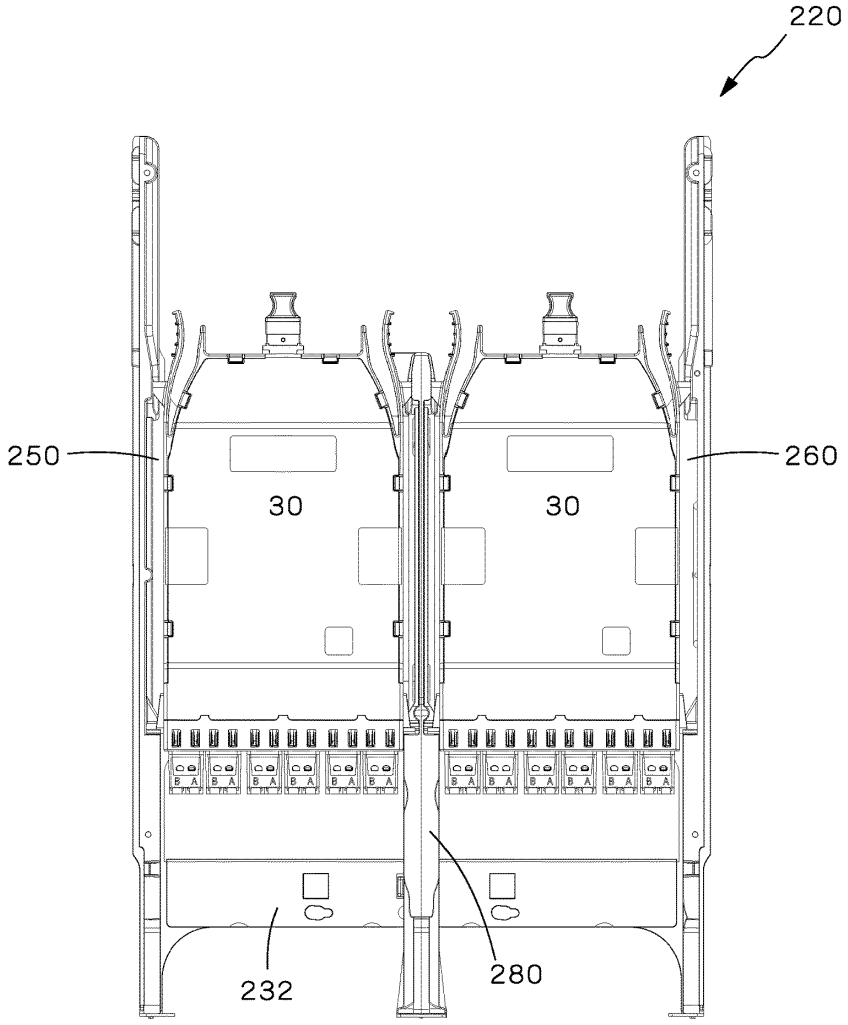

FIG.55

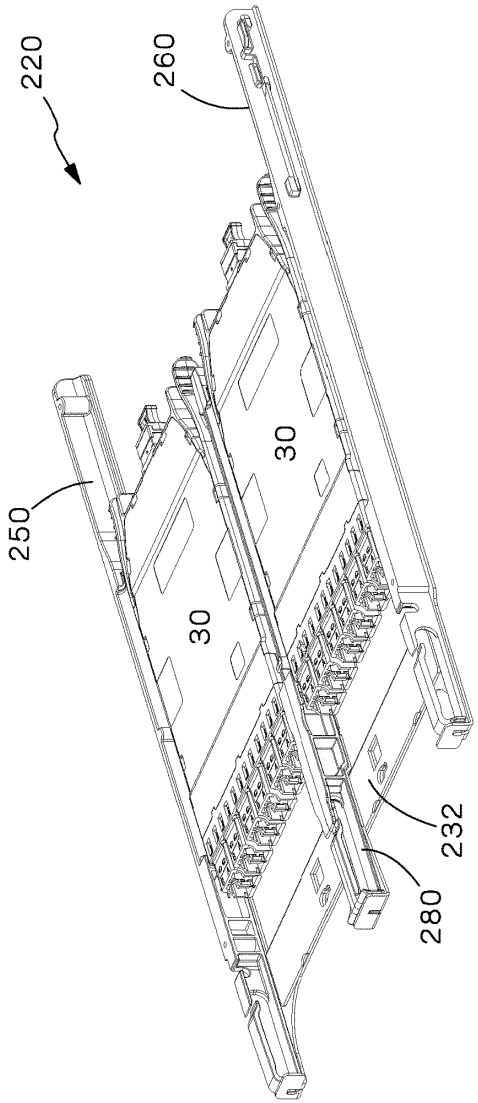

FIG.56

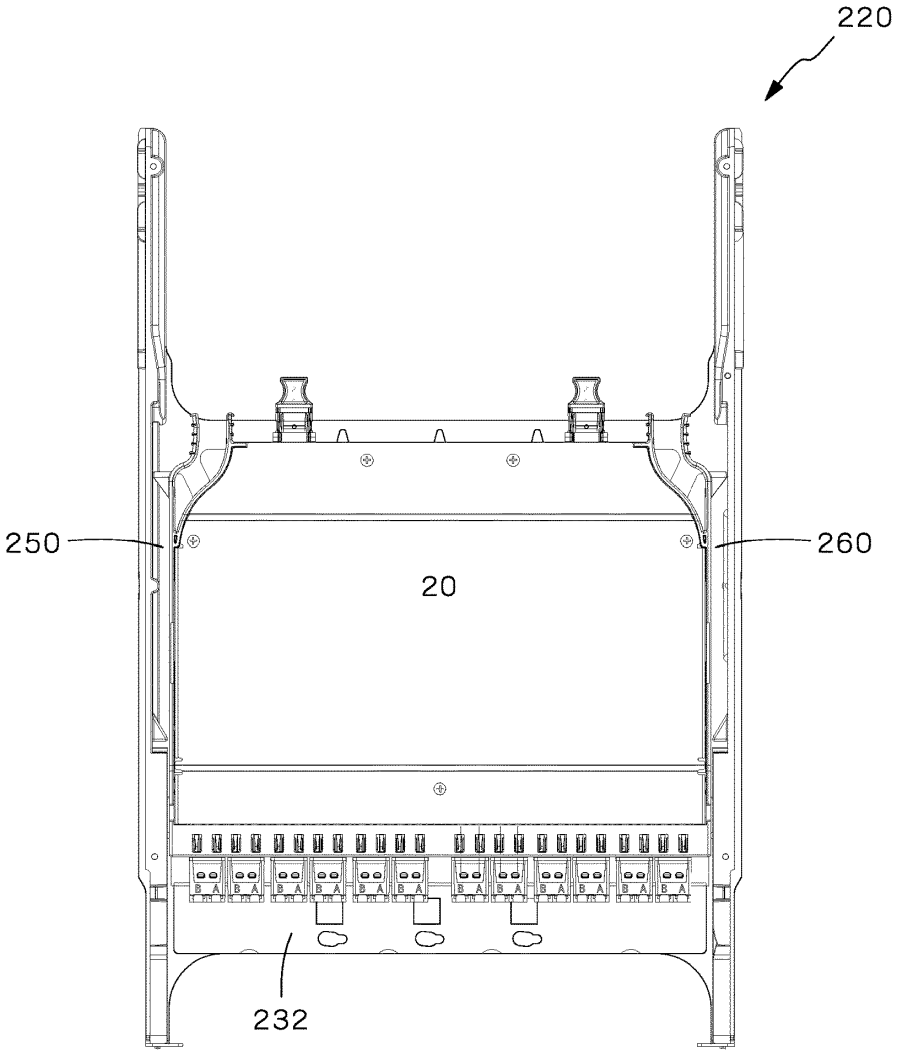

FIG.57

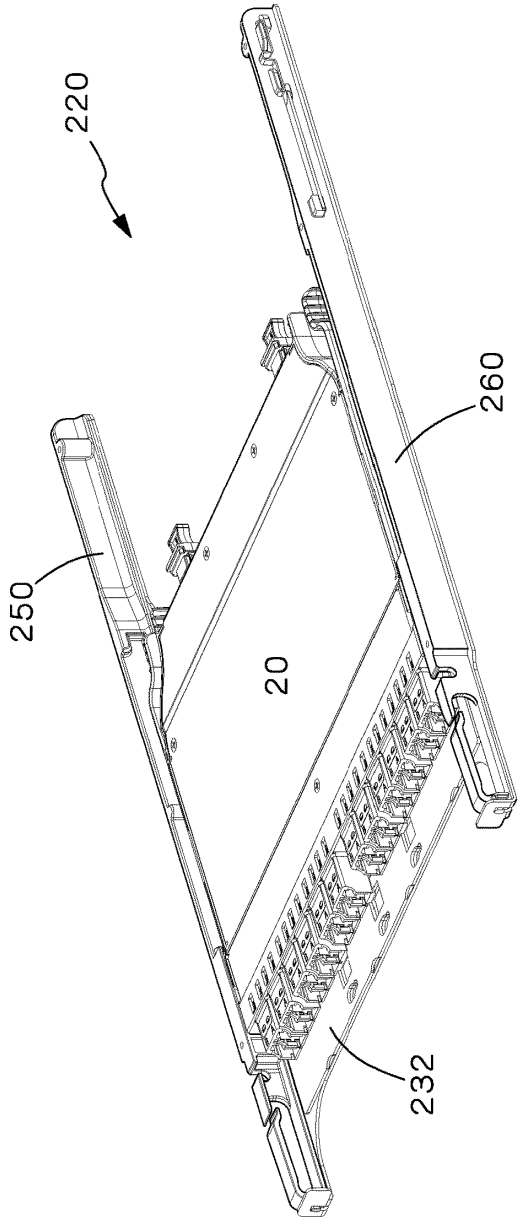

FIG.58

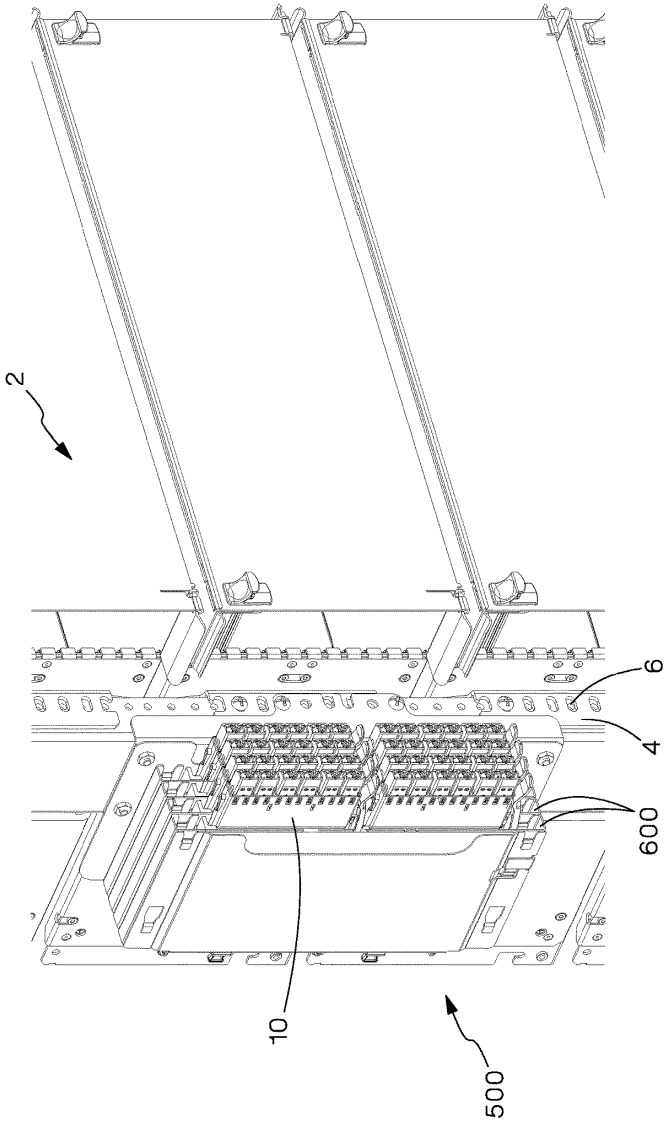

FIG.59

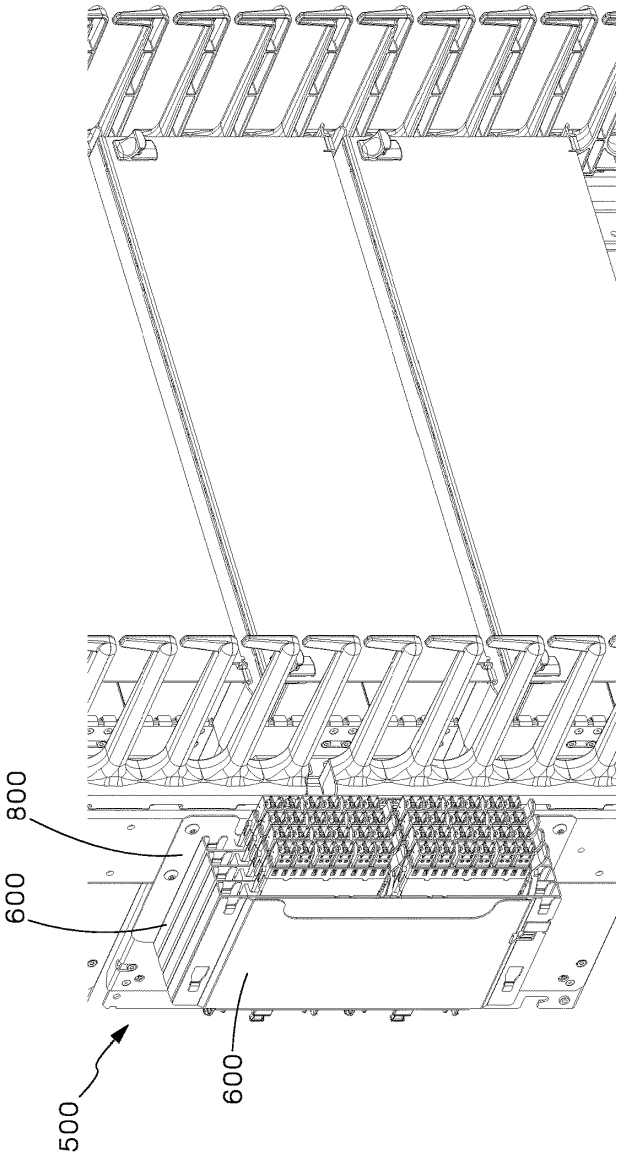

FIG.60

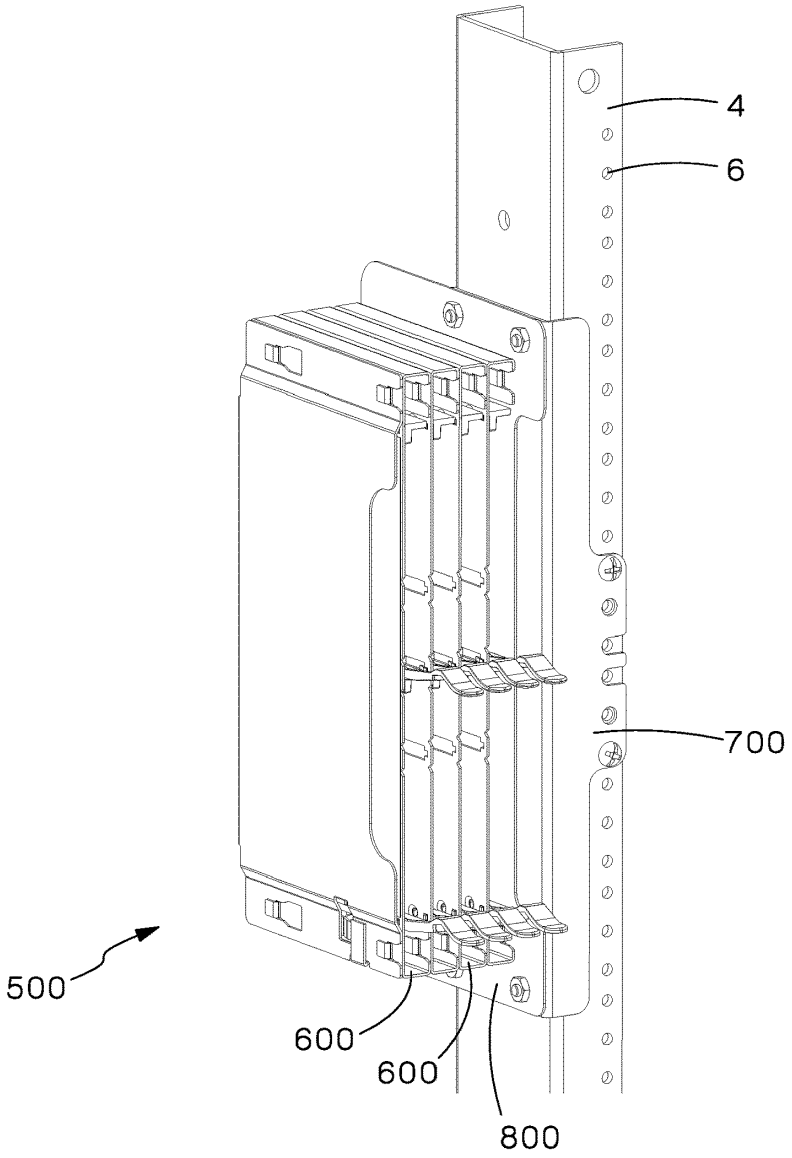

FIG.61

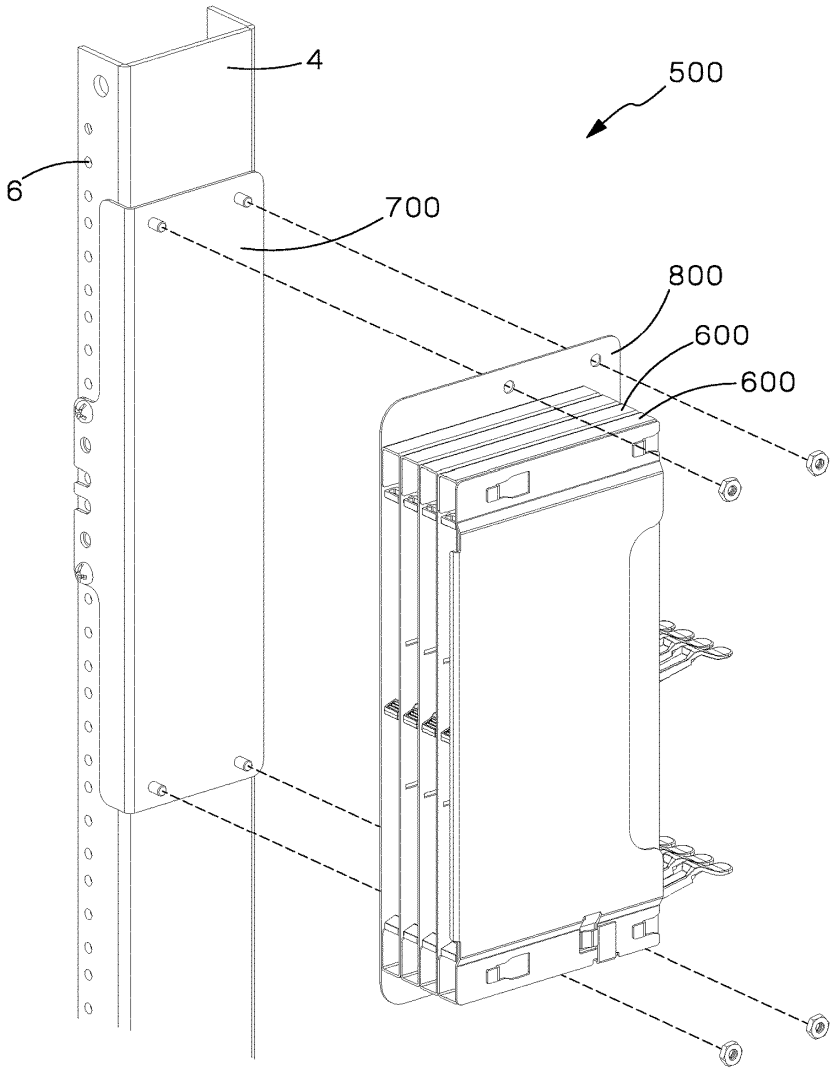

FIG.62

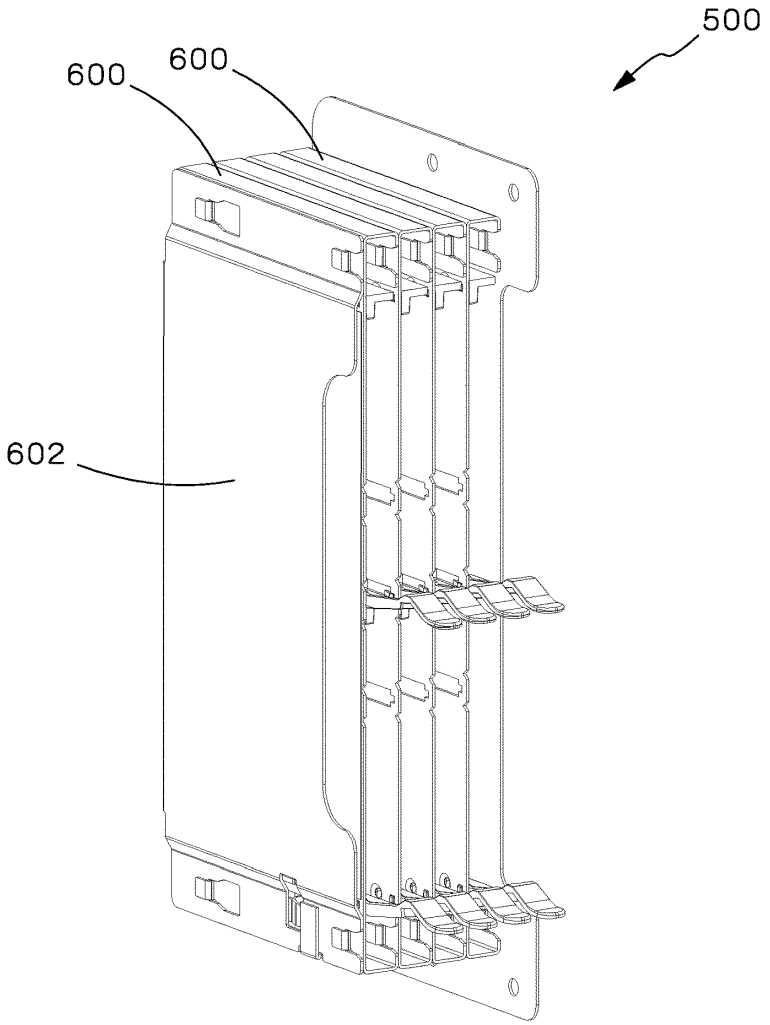

FIG.63

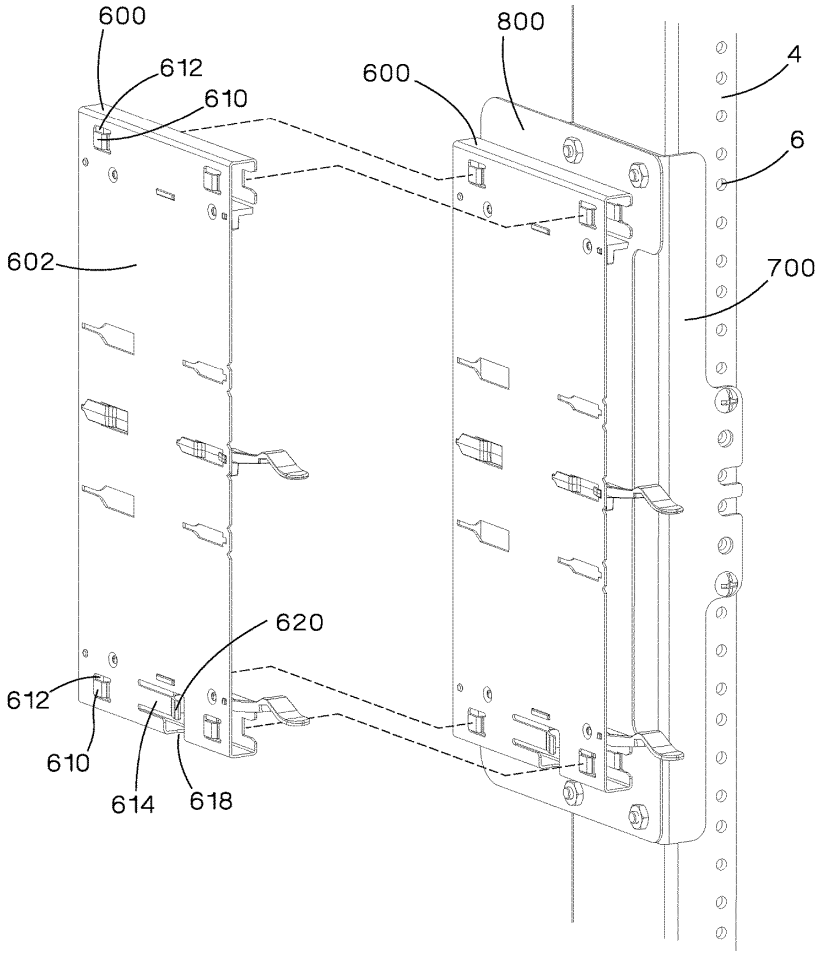

FIG.64

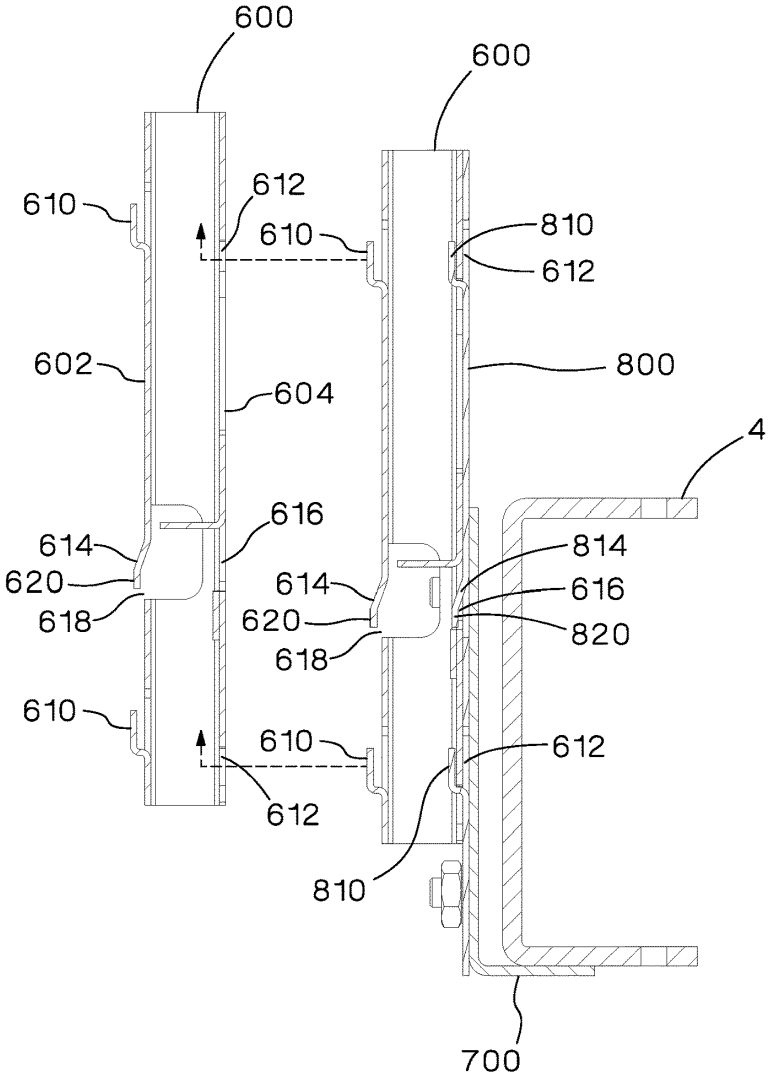
600
600
610
612
610
810
612
602
604
800
4
616
614
814
620
614
616
618
620
820
618
610
610
612
612
810
700

FIG.65

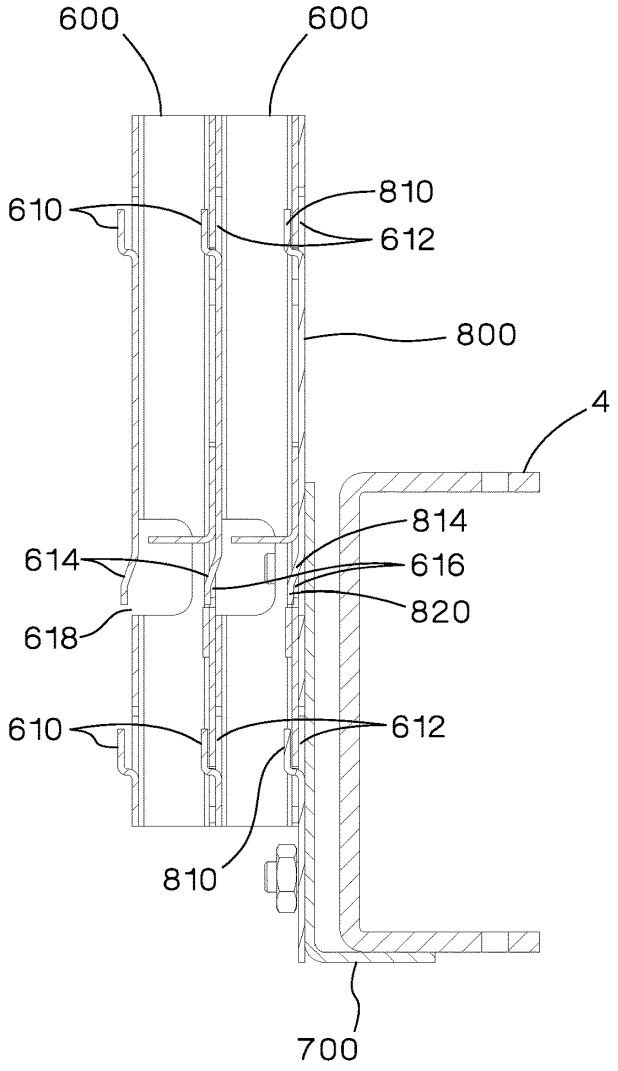

FIG.66

MODULAR FIBER OPTIC TRAY

CROSS REFERENCE TO RELATED APPLICATIONS

This application claims priority to U.S. Provisional Application No. 62/356,662, filed Jun. 30, 2016, the subject matter of which is hereby incorporated by reference in its entirety.

BACKGROUND OF THE INVENTION

The present invention relates to data center management, and in particular enclosures for high speed data transport fiber cabling systems. Optical fibers allow for transmission of communications over longer distances and at higher bandwidths than wire cables. Optical fibers are also advantageous for communication systems because signals suffer less loss than wire cables and are immune to electromagnetic interference. Optical fibers are therefore often used for high bandwidth, long distance applications. One of the primary functions of a data center is to provide connections between incoming and outgoing optical fiber connections.

A user may desire to use different sized fiber optic modules housing optical fiber connections. At present, such a user installs and removes entire banks of patch panels or trays in order to accommodate different sized fiber optic modules because trays are currently designed to only support one size of fiber optic module. Thus, it may be advantageous to provide a tray that allows different sized fiber optic modules to be installed within the tray without replacing or removing the tray itself.

SUMMARY OF THE INVENTION

The present invention is directed to a tray to support fiber optic equipment. The tray includes a tray body having a first side edge portion, a second side edge portion, a front side edge portion, a rear side edge portion and a middle portion. The middle portion of the tray body has a plurality of cutout features. The first side edge portion is configured to be secured to a first rail. The second side edge portion is configured to be secured to a second rail. The cutout features are configured to engage with a mounting feature of a third rail such that the third rail may be removably secured to the tray body in a plurality of positions.

Another embodiment of the present invention is directed to a system to support fiber optic equipment. The system includes a tray body having a first side edge portion, a second side edge portion, a front side edge portion, a rear side edge portion and a middle portion. The middle portion of the tray body has a first set of cutout features and a second set of cutout features. The system also includes a first rail secured to the first side edge portion, a second rail secured to the second side edge portion, and a third rail having a mounting feature configured to be removably secured to the first set of cutout features or the second set of cutout features.

Another embodiment of the present invention is directed to a method of supporting a plurality of sizes of fiber optic modules. The method includes inserting a mounting feature of a rail into a first set of cutout features in a tray body. The method further includes removing the mounting feature of the rail from the first set of cutout features in the tray body. The method further includes inserting the mounting feature of the rail into a second set of cutout features in the tray body.

BRIEF DESCRIPTION OF THE DRAWINGS

FIG. **1**A is a perspective view of the patch panel.

FIG. **1**B is an exploded view of the patch panel of FIG. **1**A.

FIG. **2**A is a perspective view of the frame of the patch panel.

FIG. **2**B is a front view of the frame of the patch panel.

FIG. **2**C is a bottom view of the frame of the patch panel.

FIG. **3** is a perspective view of the rear of the patch panel.

FIGS. **4**A and **4**B are perspective and side views of the center support brackets, respectively.

FIG. **5** is a perspective view of the modular tray of the patch panel.

FIGS. **6**A, **6**B, and **6**C are perspective views of the left, removable, and right rails of the patch panel, respectively.

FIGS. **6**D and **6**E are perspective views of the right and left rails of the patch panel, respectively.

FIG. **7** is a top view of the modular tray with two modules installed in the tray.

FIG. **8** is a perspective view of the modular tray with two modules installed in the tray.

FIG. **9** is a top view of the modular tray with three modules installed in the tray.

FIG. **10** is a perspective view of the modular tray with three modules installed in the tray.

FIG. **11** is a top view of the modular tray with one module installed in the tray.

FIG. **12** is a perspective view of the modular tray with one module installed in the tray.

FIGS. **13**A, **13**B, and **13**C are top, side, and cross-section views of the removable rail of the patch panel.

FIG. **14**A is a top view of a portion of the modular tray.

FIG. **14**B is a cross-section view of the removable rail.

FIG. **14**C is a side view of the removable rail.

FIG. **15** is a top view of the modular tray with three removable rails installed in the tray.

FIG. **16** is a top view of a portion of the modular tray with the right and left rails.

FIG. **17** is a perspective view of the modular tray with three removable rails installed in the tray.

FIG. **18** is a perspective view of a portion of the modular tray with three removable rails installed in the tray.

FIG. **19** is a perspective view of the bottom of a portion of the modular tray with three removable rails installed in the tray.

FIG. **20** is a perspective view of the left and right rails and three removable rails of the patch panel.

FIG. **21** is cross sectional views of the three removable rails of FIG. **15**.

FIG. **22** is cross sectional views of the three removable rails of FIG. **15**.

FIG. **23** is cross sectional views of the three removable rails of FIG. **15**.

FIG. **24** is cross sectional views of the three removable rails of FIG. **15**.

FIGS. **25**A and **25**B are side views of the two different removable rails shown in FIG. **20**.

FIGS. **26**A and **26**B are top views of a portion of the modular tray with modules installed in the tray.

FIGS. **27**A and **27**B are top views of a portion of the modular tray with modules installed in the tray.

FIGS. **28**A and **28**B are top views of a portion of the modular tray with modules installed in the tray.

FIGS. **29**A and **29**B are top views of a portion of the modular tray with modules installed in the tray.

FIG. **30** is a perspective view of the rear of a High Density Fiber Enclosure ("HDFE").

FIG. **31** is a perspective view of the rear of another embodiment of a HDFE.

FIG. **32** is a perspective view of the rear of another embodiment of a HDFE.

FIG. **33** is a perspective view of the HDFE tray with a removable rail installed in the tray.

FIG. **34** is an exploded perspective view of the HDFE tray of FIG. **33**.

FIG. **35** is a perspective view of the body of the HDFE tray.

FIG. **36** is a perspective view of the HDFE tray with two removable rails installed in the tray.

FIG. **37** is a perspective view of body of the HDFE tray including right and left rails.

FIG. **38** is a perspective view of the HDFE removable rail.

FIG. **39** is an exploded perspective view of the HDFE removable rail.

FIG. **40** is a bottom perspective view of a portion of a HDFE tray and a HDFE removable rail.

FIG. **41** is a bottom perspective view of a portion of a HDFE tray with a HDFE removable rail partially installed in the tray.

FIG. **42** is a bottom perspective view of a portion of a HDFE tray with a HDFE removable rail fully installed in the tray.

FIG. **43** is a bottom perspective view of a portion of a HDFE removable rail installed in a HDFE tray.

FIG. **44** is a perspective view of a HDFE enclosure.

FIG. **45** is a front magnified view of the HDFE enclosure.

FIG. **46** is a top view of a portion of a HDFE enclosure.

FIG. **47** is an exploded perspective view of the rear of the HDFE enclosure including a removable top cover.

FIG. **48** is an exploded perspective view of the rear of the HDFE enclosure including a removable top cover.

FIG. **49** is a perspective view of the rear of the HDFE enclosure with the removable top cover installed.

FIG. **50** is a perspective view of the HDFE enclosure with a HDFE removable rail partially installed.

FIG. **51** is a side view of a HDFE modular tray with a HDFE removable rail partially installed.

FIG. **52** is a bottom perspective view of the body of a HDFE modular tray with a HDFE removable rail installed in the tray.

FIG. **53** is a top view of a HDFE modular tray with three modules installed in the tray.

FIG. **54** is a perspective view of a HDFE modular tray with three modules installed in the tray.

FIG. **55** is a top view of a HDFE modular tray with two modules installed in the tray.

FIG. **56** is a perspective view of a HDFE modular tray with two modules installed in the tray.

FIG. **57** is a top view of a HDFE modular tray with one module installed in the tray.

FIG. **58** is a perspective view of a HDFE modular tray with one module installed in the tray.

FIG. **59** is a perspective view of a modular patch panel installed on the front face of the equipment rail of a fiber optic enclosure.

FIG. **60** is another perspective view of a modular patch panel installed on the side of the equipment rail of a fiber optic enclosure.

FIG. **61** is a perspective view of a modular patch panel installed on the rear face of the equipment rail of a fiber optic enclosure.

FIG. **62** is an exploded perspective view of the modular patch panel of FIG. **61**.

FIG. **63** is a perspective view of the modular patch panel.

FIG. **64** is an exploded perspective view of the modular patch panel of FIG. **63**.

FIG. **65** is a cross sectional view of the modular patch panel prior to installation of an additional unit.

FIG. **66** is a cross sectional view of the modular patch panel with all units shown in FIG. **65** installed.

DETAILED DESCRIPTION OF THE INVENTION

As shown in FIGS. **1**A and **1**B, a patch panel **50** consists of a frame **100**, modular tray **120**, and center support brackets **170**. A plurality of removable rails **180** as shown in FIG. **6**B may be added to or removed from the modular tray **120** in order to support differently-sized fiber optic modules **10** that support a different number of optical fibers. Referring to FIG. **5**, in a preferred embodiment, the removable rails may be added or removed in order to support one 24-optical fiber module **20**, two 12-optical fiber modules **30**, or three 8-optical fiber modules **40**. The fiber optic modules shown in all of the Figures (for example, FIG. **7**) of this application include duplex LC adapters at the front of the module that lead to 1 MPO adapter at the rear of the module. The 24-optical fiber module **20** shown in the Figures includes 12 LC adapters; the 12-optical fiber module **30** as shown in the Figures includes 6 LC adapters; and the 8-optical fiber module **40** as shown in the Figures includes 4 LC adapters. One of ordinary skill in the art would understand that different numbers of optical fibers and different numbers and types of adapters may be used in a fiber optic module that may be installed within the present invention.

Referring now to FIGS. **2**A, **2**B, and **2**C, the frame **100** includes a top cover **102**, right side **104**, left side **106**, and a bottom flange **112**. The bottom flange **112** is configured to support a modular tray **120**. The right side **104** and left side **106** of the frame each include two bridge lance features **110** disposed above the bottom flange **112**. The bridge lance features **110** are slots formed in the right side **104** and left side **106** of the frame **100** to support additional modular trays **120** in the frame **100**. In a preferred embodiment, two bridge lance features **110** are disposed in each side so that the frame **100** can support two additional modular trays **120** above the modular tray **120** supported by the bottom flange **112**. One of ordinary skill in the art would understand that the bridge lance features **110** and center support brackets **170** (described below) may have more or fewer slots that support modular trays **120**. The frame may also include holes **108** for mounting the frame **100** to fiber optic enclosure rail **4** within a fiber optic enclosure **2** and mounts **114** for cable slack management trays **8** as shown in FIG. **3**.

Referring now to FIGS. **4**A and **4**B, the center support brackets **170** are comprised of a bracket body **172**, holes **174** to attach the bracket to the frame **100** and lowermost tray **120**, and notches **176** to support the additional modular trays **120** disposed in the frame **100**. In a preferred embodiment, the center support brackets **170** include two notches **176** to support two additional modular trays **120**.

Referring now to FIG. **5**, a modular tray **120** includes at least one tray body **132**, at least one set of cutout features **140** disposed in the tray body **132**, an alignment slot **134** located on the left edge **122** and right edge **124** of the tray body **132**, a left rail **150** (see FIGS. **6**A and **6**E), and a right rail **160** (see FIGS. **6**C and **6**D). As shown in FIG. **5**, two tray

bodies **132** may make up one modular tray **120**. The alignment slots **134** are each configured to receive an alignment feature **156**, **166** located on the bottom portion **154** of the left rail **150** and bottom portion **164** of right rail **160**. As shown in FIG. **6**E, in addition to the alignment feature **156**, the left rail **150** also includes a rear latch retention feature **152** and a fiber optic module contact protrusion **158**. The rear latch retention feature **152** is configured to receive a rear fiber optic module retention latch **12** of a fiber optic module **10**. The fiber optic module contact protrusion **158** is configured to abut against a fiber optic module **10** during installation of a fiber optic module **10** as well as once the fiber optic module **10** is installed. As shown in FIG. **6**D, in addition to the alignment feature **166**, the right rail also includes a rear latch retention feature **162** and a front stop latch **168**. The front stop latch **168** is configured to retain a fiber optic module retention feature **12** when a fiber optic module **10** is fully installed in the modular tray **120**. Both the left rail **150** and right rail **160** are riveted, secured with screws, or otherwise permanently installed onto the left edge **122** and right edge **124**, respectively, of the modular tray body **132**.

Referring back to FIG. **5**, the cutout features **140** of the modular tray **120** are configured to receive a removable rail **180** in such a way that the removable rail **180** may be secured to and removed from the modular tray **120**. In a preferred embodiment, one cutout feature **120** is a set of two or more cutouts in the body of the tray **120** each shaped to receive a portion of the removable rail **180**. The cutout features **120** are preferably shaped as a larger rectangle at the portion of the cutout closest to the front of the modular tray **120** with a rear portion of the cutout that forms a slit. One set of cutout features **140** are disposed in a line parallel to the left and right rails **150**, **160**. Preferably, three sets of cutout features **140** are disposed on the modular tray. One middle set of cutout features **146** is disposed along the midline between the left and right rails **150**, **160**, so that, when a removable rail **180** is installed within the middle set of cutout features **146**, two 12-optical fiber modules **30** may be installed on either side of the removable rail **180** as shown in FIGS. **7-8**. Two additional sets of cutout features, left set of cutout features **144** and right set of cutout features **142**, are disposed on either side of the middle set of cutout features **146** so that, when removable rails **180** are installed in both the left set of cutout features **144** and right set of cut out features **142**, three 8-optical fiber modules **40** may be installed into the modular tray **120** as shown in FIGS. **9-10**. Finally, when no removable rails **180** are installed in the modular tray **120**, one 24-optical fiber module may be installed between the left rail **150** and right rail **160** as shown in FIGS. **11-12**.

Referring now to FIGS. **13**A, **13**B, and **13**C, the removable rails **180** include two rear latch retention features **188**, a module contact protrusion **190**, a front stop latch **192**, a front retention boss **194**, and at least one T-shaped mounting feature **196**. One rear latch retention feature **188** is disposed on the left side **182** and right side **184** of the removable rail **180**. The rear latch retention features **188**, module contact protrusion **190**, and front stop latch **192** are the same as on the left rail **150** and right rail **160**. The front retention boss **194** is disposed within the front-most portion of the front-most cutout feature **140***a* when the removable rail **180** is fully installed in a modular tray **120**. The T-shaped mounting feature **196** is located on the bottom of the removable rail **180** and includes a tapered front portion **198**. The T-shaped mounting feature is shaped so that it can be inserted into the larger rectangle portion of the cutout features **140** closest to the front of the modular tray **120** and then slid toward the back of modular tray **120** so that the T-shaped mounting feature **196** securely engages with the rear portion of the cutout features **140** that forms a slit.

As shown in FIGS. **14-24**, if different sets of cutout features **140** are disposed on the tray **120**, one or more of the sets may be slightly different—i.e. as shown in FIGS. **17-19**, the cutout features may be of different sizes or shapes, or may be closer or further away from the front of the tray **120** than cutout features in other sets of cutout features. If this is the case, the removable rails **180** configured to be disposed in the cutout features would also be slightly different so that only a removable rail **180** designed to be installed in a particular set of cutout features **140** could be installed in that set of cutout features **140**. Such different sizes or shapes may allow for different rails to be used in different positions. Additionally, these rails of different sizes or shapes may be color coded or otherwise identified to match up the appropriate removable rail **180** to a set of cutout features **140**.

FIGS. **21-24** provide cross-sectional views of the removable rails **180** installed in the modular tray **120** shown in FIG. **15**. As can be seen in FIG. **21**, the tapered front of the T-shaped mounting feature **198** at the rear of the center removable rail **180** is larger than the outside removable rails **180**. Similarly, as shown in FIG. **22**, the cross-section of the center removable rail **180** is larger than the cross-section of the outside removable rails **180**. Thus, the center removable rail **180** would only fit within the middle set of cutout features **146**, and the outside removable rails **180** would only fit within the left and right sets of cutout features **142**, **144**. FIGS. **23** and **24** show that the second T-shaped features of the removable rails **180** have similarly-sized cross sections i.e. the tapered front **198** and cross section of the T-shaped mounting features **196** of the center removable rail **180** are larger than the tapered front **198** and cross section of the T-shaped mounting features **196** of the outside removable rails **180**. One of ordinary skill in the art would understand that this feature may be accomplished in many other ways—for example, the middle set of cutouts **146** and T-shaped mounting feature **196** of the middle removable rail **180** may be disposed slightly closer to the front if the modular tray **120** than the left and right sets of cutouts **242**, **244** and the T-shaped mounting features **196** of the left and right removable rails **180**.

As shown in FIGS. **25**A and **25**B, in which the removable rail **180** is fully installed in FIG. **25**A, in order to install a removable rail **180** into a modular tray **120**, the T-shaped mounting feature(s) **196** of the removable rail **180** are inserted through the larger portion of the cutout features **140** in one set of cutout features. The removable rail **180** is then slid toward the back of the modular tray **120** until the T-shaped mounting feature **196** is secured within the narrower portion of the cutout features **140**. When the T-shaped mounting features **196** reach the rear-most portion of the cutout features **140**, the front retention boss **194** slides into and abuts the front of the front-most cutout **140***a*. Thus, the front retention boss **194** secures the removable rail **180** in the modular tray **120**. In order to remove the removable rail **180**, a user first uses his hand or other tool to press the front retention boss **194** upward past the front of the front-most cutout **140***a*. Once the front retention boss **194** clears the front-most cutout **140***a*, the removable rail **180** may be slid toward the front of the modular tray **120** until the T-shaped features **196** of the removable rail **180** are located in the larger portion of the cutout features **140**. The removable rail **180** is then no longer secured to the modular tray **120** and may be removed.

As shown in FIGS. **26**A and **26**B, once the removable rail **180** is installed, fiber optic modules **10** may be installed onto the tray **120** in a conventional manner. In particular, to install a fiber optic module **10** from the front of the fiber optic enclosure **2**, a user pushes the fiber optic module **10** from the front of the enclosure into a space on the tray formed by two of the rails installed on the modular tray **120**. The user continues pushing the fiber optic module **10** into the space until the front retention feature **14** of the fiber optic module **10** seats within a front stop latch **168** or **192**. As shown in FIGS. **27**A and **27**B, to uninstall a fiber optic module **10** from the front of the enclosure **2** a user pushes the front stop latch **168** or **192** to the right to release the fiber optic module **10**. The user then pulls the fiber optic module **10** toward the front of the fiber optic enclosure **2**.

Referring now to FIGS. **28**A and **28**B, to install a fiber optic module **10** from the rear of the fiber optic enclosure **2**, the user pushes the fiber optic module **10** from the rear of the enclosure **2** into a space on the tray **120** formed by two of the rails installed on the modular tray **120**. The user continues pushing until the rear module retention latches **12** of the fiber optic module **10** seat in the rear latch retention features **152**, **162**, or **188** of the rails. As shown in FIGS. **29**A and **29**B, to uninstall a fiber optic module **10**, a user squeezes the rear module retention latches **12** of the module toward each other until the fiber optic module **10** is released from the rear latch retention features **152**, **162**, or **188**. The user then continues to pull the fiber optic module **10** toward the rear of the fiber optic enclosure **2**.

Another embodiment of the present invention, a High Density Fiber Enclosure (HDFE) **200** that includes a modular tray and removable rail design is described below. As shown in FIGS. **30-32**, the High Density Fiber Enclosure **200** includes a top cover **202**, bottom portion **212**, and mounting for cable slack management **214**. As further shown in FIG. **33**, the HDFE **200** also includes a HDFE modular tray **220** that includes at least one tray body **232**, HDFE cut out features **240**, alignment pins **234**, alignment holes **230**, metal tabs **236**, a HDFE left rail **250**, a HDFE right rail **260**, and two labels **16** (shown in FIGS. **36-37**). One alignment pin **234** each is located on the left edge **222** and right edge **224** of the HDFE modular tray **220** and passes through an alignment hole **230**. The alignment pins **234** are self-clinching and are configured to engage with a hole in a HDFE left rail **250** and right rail **260**, respectively, to align the HDFE left rail **250** and right rail **260** with the left edge **222** and right edge **224** of the HDFE modular tray **220**. The alignment pins **234** may be self-tapping screws or another suitable fastener known in the art. A metal tab **236** is located at the front-most portion of the left edge **222** and right edge **224** of the HDFE modular tray **220**. The metal tab **236** extends upward at a 90 degree angle to the HDFE modular tray **220** and secures the front portion of the HDFE left rail **250** and right rail **260**. The labels **16** are disposed on the front **226** of the HDFE tray **220**.

The HDFE left rail **250** and HDFE right rail **260** are both permanently secured to the left edge **222** and right edge **224** respectively of the HDFE modular tray **220**. The HDFE left rail **250** and HDFE right rail **260** also both include a metal spring clip **252**, **262** for retaining a fiber optic module **10**. The metal spring clip **252** is disposed on the right side **256** of the HDFE left rail **250**, and the metal spring clip **262** is disposed on the left side **266** of the HDFE right rail **260** so that the metal spring clips **252**, **262** face one another.

The HDFE cutout features **240** are formed to removably receive HDFE removable rails **280**. As shown in FIGS. **33-37**, a HDFE cutout feature **240** is a set of two or more cutouts in the body of the tray **220** each shaped to receive a portion of the HDFE removable rail **280**. The set of cutout features **240** are disposed in a line parallel to the left and right rails **250**, **260**. In a preferred embodiment four cutouts comprise one set of cutout features **240**. The rear-most cutout **240***a* is triangularly-shaped so that the triangle points toward the rear **228** of the HDFE modular tray **220**. The middle cutout **240***b* is formed of an overlapping larger and smaller rectangle, where the smaller rectangle is configured to securely hold a portion of the HDFE removable rail **280**. The final two cutouts are disposed proximate to one another near the front **226** of the HDFE modular tray **220**. The forward-most cutout **240***d* is formed of two ovals cut out of the HDFE modular tray **220**. One of the ovals is larger than the other, and the ovals overlap so that a self-clinching keyhole fastener **284** of a removable rail **280** may be inserted into the larger oval portion of the forward-most cutout **240***d* and then slid over to be secured in the smaller oval portion of the forward-most cutout **240***d*. The final cutout, the latch-receiving cutout **240***c*, is located just to the rear of the forward-most cutout **240***d* and is configured to receive a latch **290***c* located on the HDFE removable rail **280**. One embodiment of the latch-receiving cutout **240***c* is a rectangular-shaped cutout.

Referring now to FIGS. **38** and **39**, the HDFE removable rail **280** includes a metal bracket **282**, two metal spring clips **286**, a cassette guide **290**, and protrusions for engaging with the cutout features on the HDFE modular tray **220**. The metal bracket **282** extends along the bottom portion **296** of the cassette guide **290** and includes a self-clinching keyhole fastener **284** for engaging with the forward-most cutout **240***d* of the HDFE modular tray **220**. The two metal spring clips **286** are disposed on either side of the HDFE removable rail **280**. The cassette guide **290** is disposed on top of the metal bracket **282** and includes several protrusions for engaging with the cutout features on the HDFE modular tray **220** as described below. One of ordinary skill in the art would understand, and it is contemplated by this invention, that the HDFE removable rail **280** could also be formed of just one piece and/or could be made of one material. Moreover, HDFE removable rail **280** could be color-coded for easy identification by a user.

As shown in FIGS. **40-43**, the protrusions for engaging with the cutout features on the HDFE modular tray **220** include a front latch **290***c*, a middle protrusion **290***b*, and a rear protrusion **290***a*. The front latch **290***c* includes a latching portion which extends in the direction of the HDFE modular tray **220** when the HDFE removable rail **280** is installed in the HDFE tray **220** so that the HDFE removable rail **280** may not be moved side to side upon the HDFE removable tray **220**. The front latch **290***c* is disposed on the front portion **292** of the cassette guide **290**. The latching portion of the front latch **290***c* extends into the latch-receiving cutout **240***c* to lock the HDFE removable rail **280** to the HDFE modular tray **220**. The middle protrusion **290***b* is formed to engage with the middle cutout **240***b* and disposed between the front **292** and rear **294** portions of the cassette guide **290**. The middle protrusion **290***b* is preferably T- or I-shaped so that the top of the T or I of the middle protrusion **290***b* is disposed through the middle cutout **240***b* when the HDFE removable rail **280** is installed in the HDFE modular tray **220**. The rear protrusion **290***a* is formed to engage with the rear-most cutout **240***a* and disposed on the rear **294** of the cassette guide **290**. The rear protrusion **290***a* is formed so that the rear portion of rear protrusion **290***a* engages with the triangularly-shaped rear-most cutout **240***a*

so that the HDFE removable rail **280** can pivot in a plane parallel to the HDFE modular tray **220**.

As shown in FIGS. **44-46**, portions of the bottom portion **212** of the HDFE enclosure **200** may be raised. One of ordinary skill in the art would understand that these raised or beaded portions are typically included in an enclosure to strengthen the enclosure. However, the beads **212***a* that run parallel to the rails **250**, **260**, and **280** also provide clearance between the HDFE tray **220** and the bottom portion **212** of the HDFE enclosure **200**. This provides a space for the protrusions **290***a*, **290***b*, and **290***c* of the HDFE removable rail **280** to move within when a HDFE removable rail **280** is installed within an HDFE tray **220**. Other shapes and types of beads **212***a* are contemplated by this disclosure.

As shown in FIGS. **46-47**, the top cover **202** of the HDFE enclosure **200** is cut away above the mounting for cable slack management **212**. In one embodiment of the disclosed invention, this cut away portion may be covered by a removable top cover **202***a* as shown in FIGS. **47-49**.

The sets of cutouts features **240** in the HDFE modular tray **220** and protrusions on the HDFE removable rail **280** may be slightly different so that only a particular HDFE removable rail **280** may be secured within a set of cutout features **240** as previously described with respect to the patch panel embodiment. For example, the middle set of cutouts **246** may be disposed slightly closer to the front of the HDFE modular tray **220** than the left and right sets of cutouts **242**, **244**, and the protrusions on the HDFE removable rail **280** may be disposed closer to the front of the HDFE removable rail **280**.

Referring now to FIGS. **50-52**, in order to insert the HDFE removable rail **280** into the HDFE modular tray **220**, a user first positions the HDFE removable rail **280** so that all of the protrusions **290***a*, **290***b*, **290***c* and the self-clinching keyhole fastener **284** are disposed within one set of cutout features **240**. The user then pushes the removable rail **280** toward the rear of the HDFE tray **220** to seat the rear-most protrusion **290***a* into rear of the rear-most cutout **240***a*. Maintaining the protrusions **290***a*, **290***b*, **290***c* and self-clinching keyhole fastener **284** in corresponding cutouts **240***a*, **240***b*, **240***c*, and **240***d*, the user then rotates the HDFE removable rail **280** so that the middle protrusion **290***b* is moved into the smaller portion of the middle cutout **240***b*. As this occurs, the front latch **290***c* seats within the latch-receiving cutout **240***c* to secure the HDFE removable rail **280** in the HDFE modular tray. The self-clinching keyhole fastener **284** seats in cutout **240***d* at this time as well. In order to remove the HDFE removable rail, the user depresses and releases the front latch **290***c*, rotates the HDFE removable rail **280** slightly so that the front latch **290***c*, middle protrusion **290***b*, and self-clinching keyhole fastener **284** are no longer seated in the latch-receiving cutout **240***c*, the smaller portion of the middle cutout **240***b*, and the smaller portion of forward most cutout feature **240***d*. The user then pulls HDFE removable rail **280** slightly forward, lifts, and removes the HDFE removable rail **280** from the HDFE modular tray **220**.

Preferably, three sets of cutout features **240** are disposed on the HDFE tray. One middle set of cutout features **246** is disposed along the midline between the left and right rails **250**, **260**, so that, when a removable rail **280** is installed within the middle set of cutout features **246**, two 12-optical fiber modules **30** may be installed on either side of the removable rail **280** as shown in FIGS. **55-56**. Two additional sets of cutout features, left set of cutout features **244** and right set of cutout features **242**, are disposed on either side of the middle set of cutout features **246** so that, when removable rails **280** are installed in both the left set of cutout features **244** and right set of cut out features **242**, three 8-optical fiber modules **40** may be installed into the HDFE tray **220** as shown in FIGS. **53-54**. Finally, when no removable rails **280** are installed in the HDFE tray **220**, one 24-optical fiber module **20** may be installed between the left rail **250** and right rail **260** as shown in FIG. **57-58**.

One of ordinary skill in the art would understand that the cutout features **140** and removable rails **180** described with respect to the patch panel **50** could be used within the High Density Fiber Enclosure **200**, and that the HDFE cutout features **240** and HDFE removable rail **280** could be used with the patch panel **50**. Moreover, one of ordinary skill in the art would understand that differently shaped cutouts and removable rail mount shapes could be used in either the patch panel **50** or High Density Fiber Enclosure **200**. These additional modular tray and removable rail designs are contemplated and included within this description.

Finally, a modular patch panel that may include removable rails described above is also disclosed. Referring now to FIGS. **59-63**, the modular patch panel **500** includes at least one unit **600** that can be attached to a fiber optic enclosure equipment rail **4** or another unit **600**, a post mounting bracket **700**, and a mounting plate **800**. A unit **600** includes four hooks **610**, four openings **612**, a cantilever latch **614**, a mating hole **616**, and a cutout **618**. The four hooks **610** are disposed on the top portion **602** of the unit **600**. Two of the hooks **610** are disposed on the left edge **606** of the unit **600** so that the hooks face the same direction. Two of the hooks **610** are disposed on the right edge **608** of the unit **600** so that the hooks **610** face the same direction as the hooks **610** disposed on the left edge **606** of the unit **600**. The four holes **612** are disposed through the bottom portion **604** of the unit **600**. The holes **612** are configured to slidably receive the four hooks **610** of a different unit **600** to secure the units **600** together. One of ordinary skill in the art would understand, and it is contemplated in this invention, that hooks **610** of different shapes, or even posts or other protrusions, could be used to engage with holes **612**.

The cantilever latch **614** is disposed between two of the hooks **610** on the right edge **608** of the unit **600** and includes a cantilevered portion **620**. The cantilevered portion **620** faces the opposite direction of the hooks **610** and is configured to lock the units **600** to one another when the hooks **610** are fully installed in the holes **612** by engaging with the mating hole **616** of another unit **600**. The mating hole **616** is disposed on the bottom portion **604** of each unit **600**, and the cantilever latch **614** is disposed on the top portion **602** of each unit **600**. A cutout **618** in each unit **600** allows a user to reach between the units **600** to depress and release the cantilever latch **614**. The units **600** may be stacked and secured to one another as discussed below to add additional mounting for fiber optic trays and modules outside a fiber optic enclosure **2**.

The bottom-most unit **600** can be attached to a fiber optic equipment enclosure rail **4** by using a post mounting bracket **700** and a mounting plate **800**. The post mounting bracket **700** is designed to be secured to the fiber optic equipment enclosure rail **4** using the mounting holes already existing in the enclosure rail **4**. The mounting plate **800** is secured to the post mounting bracket **700** and includes four hooks **810** and a cantilever latch **814**. The hooks **810** and cantilever latch **814** are all configured to be the same as the hooks **610** and cantilever latch **614**. A unit **600** may also include a label card **902** and label card holder **900** for identifying the particular unit **600**.

Referring now to FIGS. **64-66**, to install a set of units **600** on the front or rear face of an equipment rail **4** of a fiber optic

enclosure **2**, the user first installs the post mounting bracket **700** using the pre-existing mounting holes on the fiber optic equipment enclosure rail **2**, corresponding holes on the post mounting bracket **700**, and bolts or screws to secure the post mounting bracket **700** to the rail **4** as shown in FIG. **62**. A user then installs the mounting plate **800** onto the post mounting bracket **700** using bolts or screws. Once the post mounting bracket **700** and mounting plate **800** are secure, the user can attach a first unit **600** to the mounting plate **800** by positioning the mounting holes **612** of the unit **600** over the hooks **810** of the mounting plate **800**. The user then slides the unit **600** with respect to the mounting plate **800** so that the edge of each the mounting holes **612** is positioned within the crook of each of the hooks **810**. When the edge of the mounting holes **612** touches the back of the hooks **810**, the cantilever latch **814** of the mounting plate **800** is positioned within the mating hole **616** of the unit **600** and the cantilevered portion **820** abuts the edge of the mating hole **616** to secure the unit **600** to the mounting plate **800**. The first unit **600** may be pre-installed by a manufacturer on the post mounting bracket **700** and mounting plate **800**, such that a user may simultaneously install the first unit **600**, mounting bracket **700**, and mounting plate **800**. A second unit **600** may be installed on the first unit **600** by positioning the hooks **610** of the first unit within the mounting holes **612** of the second unit **600**, and sliding the second unit **600** relative to the first unit **600** until the hooks **610** and cantilever latch **614** are positioned in their corresponding holes as discussed above.

To remove a unit **600** from a stack of units **600** installed together, the user uses his hand or a tool to depress the cantilever latch **614** and release the top-most unit **600**. The user then slides the unit **600** until the hooks **610** no longer engage the mounting holes **612**. The unit **600** may then be removed from the stack of units **600**.

Furthermore, while the particular preferred embodiments of the present invention have been shown and described, it will be obvious to those skilled in the art that changes and modifications may be made without departing from the teaching of the invention. The matter set forth in the foregoing description and accompanying drawings is offered by way of illustration only and not as limitation.

The invention claimed is:

1. A tray to support fiber optic equipment, said tray comprising:

a tray body having a first side edge portion, a second side edge portion, a front side edge portion, a rear side edge portion and a middle portion, wherein said middle portion of said tray body has a plurality of cutout features;

wherein said first side edge portion is configured to be secured to a first rail;

wherein said second side edge portion is configured to be secured to a second rail; and,

wherein said plurality of cutout features are configured to engage with a mounting feature of a third rail such that the third rail may be removably secured to the tray body in a plurality of positions.

2. The tray of claim **1**, wherein said plurality of cutout features are arranged as a first set of at least two cutouts in the middle portion of said tray body.

3. The tray of claim **2**, wherein said first set of at least two cutouts in the middle portion of said tray body is disposed in a line parallel to the first side edge portion.

4. The tray of claim **3**, wherein said first set of at least two cutouts is disposed along a midline between the first side edge portion and the second side edge portion.

5. The tray of claim **4**, further comprising a second set of cutout features disposed between the first side edge portion of the tray body and the first set of at least two cutouts disposed along said midline.

6. The tray of claim **5**, wherein said second set of cutout features is arranged as a set of at least two cutouts in the middle portion of said tray body in a line parallel to the first side edge portion.

7. The tray of claim **5**, further comprising a third set of cutout features disposed between the second side edge portion of the tray body and the first set of at least two cutouts disposed along said midline.

8. The tray of claim **7**, wherein said third set of cutout features is arranged as a set of at least two cutouts in the middle portion of said tray body in a line parallel to the second side edge portion.

9. A system to support fiber optic equipment, said system comprising:

a tray body having a first side edge portion, a second side edge portion, a front side edge portion, a rear side edge portion and a middle portion, wherein said middle portion of said tray body has a first set of cutout features and a second set of cutout features;

a first rail secured to said first side edge portion;

a second rail secured to said second side edge portion; and,

a third rail having a mounting feature configured to be removably secured to said first set of cutout features or said second set of cutout features.

10. The system of claim **9**, wherein said third rail is not secured to said first set of cutout features or said second set of cutout features such that a twenty-four optical fiber module may be secured to said tray by said first rail and said second rail.

11. The system of claim **9**, wherein said first set of cutout features is arranged as a set of at least two cutouts disposed in parallel to the first side edge portion of said tray and disposed along a midline between the first side edge portion and the second side edge portion.

12. The system of claim **11**, wherein said third rail is removably secured to said first set of cutout features.

13. The system of claim **12**, wherein a first twelve optical fiber module may be secured to said tray by said first rail and said third rail, and wherein a second twelve optical fiber module may be secured to said tray by said second rail and said third rail.

14. The system of claim **9**, wherein said second set of cutout features is arranged as a set of at least two cutouts disposed in parallel to the first side edge portion of said tray and disposed between a midline between the first side edge portion and the second side edge portion and the first side edge portion of said tray.

15. The system of claim **14**, further comprising a third set of cutout features arranged as a set of at least two cutouts disposed in parallel to the second side edge portion of said tray and disposed between said midline and the second side edge portion of said tray.

16. The system of claim **15**, wherein said third rail is removably secured to said second set of cutout features.

17. The system of claim **15**, wherein said third rail is removably secured to said third set of cutout features.

18. The system of claim **15**, wherein said third rail is removably secured to said second set of cutout features and further comprising a fourth rail removably secured to said third set of cutout features.

19. The system of claim **18**, wherein a first eight optical fiber module may be secured to said tray by said first rail and

said third rail, a second eight optical fiber module may be secured to said tray by said third rail and said fourth rail, and a third eight optical fiber module may be secured to said tray by said fourth rail and said second rail.

20. The system of claim **9**, further comprising an enclosure having a top portion, a bottom portion, a first side and a second side, wherein portions of said bottom portion of said enclosure are raised in parallel to said cutout features to facilitate a gap between the tray body and portions of the bottom portion of said enclosure that are not raised.

21. The system of claim **9**, wherein said first side edge portion of said tray body is configured to mount to a first side edge portion of a second tray body and said second side edge portion of said tray body is configured to mount to a second side edge portion of a second tray body.

* * * * *