PTO/AIA/15 (10-17)
Approved for use through 11/30/2020. OMB 0651-0032
U.S. Patent and Trademark Office; U.S. DEPARTMENT OF COMMERCE
Under the Paperwork Reduction Act of 1995 no persons are required to respond to a collection of information unless it displays a valid OMB control number.

UTILITY PATENT APPLICATION TRANSMITTAL

(Only for new nonprovisional applications under 37 CFR 1.53(b))

Attorney Docket No.	G13569-00523-HM
First Named Inventor	Vincent PILON
Title	MODULAR FIBER OPTIC CASSETTE, SYSTEM AND METHOD
Priority Mail Express® Label No.	

APPLICATION ELEMENTS

See MPEP chapter 600 concerning utility patent application contents.

ADDRESS TO: **Commissioner for Patents**
P.O. Box 1450
Alexandria, VA 22313-1450

1. ☐ **Fee Transmittal Form** (PTO/SB/17 or equivalent)
2. ☐ **Applicant asserts small entity status.** See 37 CFR 1.27
3. ☐ **Applicant certifies micro entity status.** See 37 CFR 1.29. Applicant must attach form PTO/SB/15A or B or equivalent.
4. ☑ **Specification** [*Total Pages* 21] Both the claims and abstract must start on a new page. *(See MPEP § 608.01(a) for information on the preferred arrangement)*
5. ☑ **Drawing(s)** (35 U.S.C. 113) [*Total Sheets* 13]
6. **Inventor's Oath or Declaration** [*Total Pages* 1] *(including substitute statements under 37 CFR 1.64 and assignments serving as an oath or declaration under 37 CFR 1.63(e))*
   a. ☐ Newly executed (original or copy)
   b. ☑ A copy from a prior application (37 CFR 1.63(d))
7. ☑ **Application Data Sheet** ** See note below.* See 37 CFR 1.76 (PTO/AIA/14 or equivalent)
8. **CD-ROM or CD-R** in duplicate, large table, or Computer Program (*Appendix*)
   ☐ Landscape Table on CD
9. **Nucleotide and/or Amino Acid Sequence Submission** (*if applicable, items a. – c. are required*)
   a. ☐ Computer Readable Form (CRF)
   b. ☐ Specification Sequence Listing on:
      i. ☐ CD-ROM or CD-R (2 copies); or
      ii. ☐ Paper
   c. ☐ Statements verifying identity of above copies

ACCOMPANYING APPLICATION PAPERS

10. ☐ **Assignment Papers** (cover sheet & document(s))
    Name of Assignee _____
11. ☑ **37 CFR 3.73(c) Statement** (*when there is an assignee*) ☑ **Power of Attorney**
12. ☐ **English Translation Document** (*if applicable*)
13. ☑ **Information Disclosure Statement** (PTO/SB/08 or PTO-1449)
    ☐ Copies of citations attached
14. ☐ **Preliminary Amendment**
15. ☐ **Return Receipt Postcard** (*MPEP § 503*) (*Should be specifically itemized*)
16. ☐ **Certified Copy of Priority Document(s)** (*if foreign priority is claimed*)
17. ☐ **Nonpublication Request** Under 35 U.S.C. 122(b)(2)(B)(i). Applicant must attach form PTO/SB/35 or equivalent.
18. ☐ **Other:** _____

***Note**: (1) Benefit claims under 37 CFR 1.78 and foreign priority claims under 1.55 **must** be included in an Application Data Sheet (ADS).
(2) For applications filed under 35 U.S.C. 111, the application must contain an ADS specifying the applicant if the applicant is an assignee, person to whom the inventor is under an obligation to assign, or person who otherwise shows sufficient proprietary interest in the matter. See 37 CFR 1.46(b).

19. CORRESPONDENCE ADDRESS

☑ The address associated with Customer Number: 25545 **OR** ☐ Correspondence address below

Name					
Address					
City		State		Zip Code	
Country		Telephone		Email	

Signature	/HUGH MANSFIELD/	Date	2022-09-02
Name (Print/Type)	Hugh Mansfield	Registration No. (Attorney/Agent)	55757

This collection of information is required by 37 CFR 1.53(b). The information is required to obtain or retain a benefit by the public which is to file (and by the USPTO to process) an application. Confidentiality is governed by 35 U.S.C. 122 and 37 CFR 1.11 and 1.14. This collection is estimated to take 12 minutes to complete, including gathering, preparing, and submitting the completed application form to the USPTO. Time will vary depending upon the individual case. Any comments on the amount of time you require to complete this form and/or suggestions for reducing this burden, should be sent to the Chief Information Officer, U.S. Patent and Trademark Office, U.S. Department of Commerce, P.O. Box 1450, Alexandria, VA 22313-1450. DO NOT SEND FEES OR COMPLETED FORMS TO THIS ADDRESS. **SEND TO: Commissioner for Patents, P.O. Box 1450, Alexandria, VA 22313-1450.**
If you need assistance in completing the form, call 1-800-PTO-9199 and select option 2.

 CommScope Ex. 1033

Privacy Act Statement

The **Privacy Act of 1974 (P.L. 93-579)** requires that you be given certain information in connection with your submission of the attached form related to a patent application or patent. Accordingly, pursuant to the requirements of the Act, please be advised that: (1) the general authority for the collection of this information is 35 U.S.C. 2(b)(2); (2) furnishing of the information solicited is voluntary; and (3) the principal purpose for which the information is used by the U.S. Patent and Trademark Office is to process and/or examine your submission related to a patent application or patent. If you do not furnish the requested information, the U.S. Patent and Trademark Office may not be able to process and/or examine your submission, which may result in termination of proceedings or abandonment of the application or expiration of the patent.

The information provided by you in this form will be subject to the following routine uses:

1. The information on this form will be treated confidentially to the extent allowed under the Freedom of Information Act (5 U.S.C. 552) and the Privacy Act (5 U.S.C 552a). Records from this system of records may be disclosed to the Department of Justice to determine whether disclosure of these records is required by the Freedom of Information Act.
2. A record from this system of records may be disclosed, as a routine use, in the course of presenting evidence to a court, magistrate, or administrative tribunal, including disclosures to opposing counsel in the course of settlement negotiations.
3. A record in this system of records may be disclosed, as a routine use, to a Member of Congress submitting a request involving an individual, to whom the record pertains, when the individual has requested assistance from the Member with respect to the subject matter of the record.
4. A record in this system of records may be disclosed, as a routine use, to a contractor of the Agency having need for the information in order to perform a contract. Recipients of information shall be required to comply with the requirements of the Privacy Act of 1974, as amended, pursuant to 5 U.S.C. 552a(m).
5. A record related to an International Application filed under the Patent Cooperation Treaty in this system of records may be disclosed, as a routine use, to the International Bureau of the World Intellectual Property Organization, pursuant to the Patent Cooperation Treaty.
6. A record in this system of records may be disclosed, as a routine use, to another federal agency for purposes of National Security review (35 U.S.C. 181) and for review pursuant to the Atomic Energy Act (42 U.S.C. 218(c)).
7. A record from this system of records may be disclosed, as a routine use, to the Administrator, General Services, or his/her designee, during an inspection of records conducted by GSA as part of that agency's responsibility to recommend improvements in records management practices and programs, under authority of 44 U.S.C. 2904 and 2906. Such disclosure shall be made in accordance with the GSA regulations governing inspection of records for this purpose, and any other relevant (*i.e.*, GSA or Commerce) directive. Such disclosure shall not be used to make determinations about individuals.
8. A record from this system of records may be disclosed, as a routine use, to the public after either publication of the application pursuant to 35 U.S.C. 122(b) or issuance of a patent pursuant to 35 U.S.C. 151. Further, a record may be disclosed, subject to the limitations of 37 CFR 1.14, as a routine use, to the public if the record was filed in an application which became abandoned or in which the proceedings were terminated and which application is referenced by either a published application, an application open to public inspection or an issued patent.
9. A record from this system of records may be disclosed, as a routine use, to a Federal, State, or local law enforcement agency, if the USPTO becomes aware of a violation or potential violation of law or regulation.

UNITED STATES
PATENT AND TRADEMARK OFFICE

P.O. Box 1450
Alexandria, VA 22313 - 1450
www.uspto.gov

ELECTRONIC PAYMENT RECEIPT

APPLICATION #	RECEIPT DATE / TIME	ATTORNEY DOCKET #
17/929,566	09/02/2022 05:00:56 PM ET	G13569-00523-HM

Title of Invention

MODULAR FIBRE OPTIC CASSETTE, SYSTEM AND METHOD

Application Information

APPLICATION TYPE	Utility - Nonprovisional Application under 35 USC 111(a)	PATENT #	-
CONFIRMATION #	3654	FILED BY	Regeline Jean Francois
PATENT CENTER #	60936284	AUTHORIZED BY	Hugh Mansfield
CUSTOMER #	25545	FILING DATE	-
CORRESPONDENCE ADDRESS	-	FIRST NAMED INVENTOR	VINCENT PILON

Payment Information

PAYMENT METHOD	PAYMENT TRANSACTION ID	PAYMENT AUTHORIZED BY
CARD / 1007	E202292H07014520	Regeline Jean Francois

FEE CODE	DESCRIPTION	ITEM PRICE($)	QUANTITY	ITEM TOTAL($)
1111	UTILITY PATENT APPL. SEARCH FEE	700.00	1	700.00
1011	BASIC FILING FEE - UTILITY (PAPER FILING ALSO REQUIRES NON-ELECTRONIC FILING FEE UNDER 1.16(T))	320.00	1	320.00
1311	PATENT APPL. EXAMINATION FEE	800.00	1	800.00
1202	EACH CLAIM IN EXCESS OF 20	100.00	45	4500.00
			TOTAL AMOUNT:	$6,320.00

This Acknowledgement Receipt evidences receipt on the noted date by the USPTO of the indicated documents, characterized by the applicant, and including page counts, where applicable. It serves as evidence of receipt similar to a Post Card, as described in MPEP 503.

New Applications Under 35 U.S.C. 111

If a new application is being filed and the application includes the necessary components for filing date (see 37 CFR 1.53(b)-(d) and MPEP 506), a Filing Receipt (37 CFR 1.54) will be issued in due course and the date shown on this Acknowledgement Receipt will establish the filing date of the application

National Stage of an International Application under 35 U.S.C. 371

If a timely submission to enter the national stage of an international application is compliant with the conditions of 35 U.S.C. 371 and other applicable requirements a Form PCT/DO/EO/903 indicating acceptance of the application as a national stage submission under 35 U.S.C. 371 will be issued in addition to the Filing Receipt, in due course.

New International Application Filed with the USPTO as a Receiving Office

If a new international application is being filed and the international application includes the necessary components for an international filing date (see PCT Article 11 and MPEP 1810), a Notification of the International Application Number and of the International Filing Date (Form PCT/RO/105) will be issued in due course, subject to prescriptions concerning national security, and the date shown on this Acknowledgement Receipt will establish the international filing date of the application.

PTO/AIA/96 (08-12)
Approved for use through 01/31/2013. OMB 0651-0031
U.S. Patent and Trademark Office; U.S. DEPARTMENT OF COMMERCE
Under the Paperwork Reduction Act of 1995, no persons are required to respond to a collection of information unless it displays a valid OMB control number.

STATEMENT UNDER 37 CFR 3.73(c)

Applicant/Patent Owner: BELDEN CANADA ULC

Application No./Patent No.: _____ Filed/Issue Date: September 2, 2022

Titled: MODULAR FIBER OPTIC CASSETTE, SYSTEM AND METHOD

BELDEN CANADA ULC, a Corporation

(Name of Assignee) (Type of Assignee, e.g., corporation, partnership, university, government agency, etc.)

states that, for the patent application/patent identified above, it is (choose **one** of options 1, 2, 3 or 4 below):

1. ☑ The assignee of the entire right, title, and interest.

2. ☐ An assignee of less than the entire right, title, and interest (check applicable box):

☐ The extent (by percentage) of its ownership interest is _____%. Additional Statement(s) by the owners holding the balance of the interest must be submitted to account for 100% of the ownership interest.

☐ There are unspecified percentages of ownership. The other parties, including inventors, who together own the entire right, title and interest are:

Additional Statement(s) by the owner(s) holding the balance of the interest must be submitted to account for the entire right, title, and interest.

3. ☐ The assignee of an undivided interest in the entirety (a complete assignment from one of the joint inventors was made). The other parties, including inventors, who together own the entire right, title, and interest are:

Additional Statement(s) by the owner(s) holding the balance of the interest must be submitted to account for the entire right, title, and interest.

4. ☐ The recipient, via a court proceeding or the like (*e.g.*, bankruptcy, probate), of an undivided interest in the entirety (a complete transfer of ownership interest was made). The certified document(s) showing the transfer is attached.

The interest identified in option 1, 2 or 3 above (not option 4) is evidenced by either (choose **one** of options A or B below):

A. ☐ An assignment from the inventor(s) of the patent application/patent identified above. The assignment was recorded in the United States Patent and Trademark Office at Reel _____, Frame _____, or for which a copy thereof is attached.

B. ☑ A chain of title from the inventor(s), of the patent application/patent identified above, to the current assignee as follows:

1. From: Vincent PILON To: Belden Canada Inc.

The document was recorded in the United States Patent and Trademark Office at Reel 047254, Frame 0973, or for which a copy thereof is attached.

2. From: Belden Canada Inc. To: Belden Canada ULC

The document was recorded in the United States Patent and Trademark Office at Reel 053639, Frame 0483, or for which a copy thereof is attached.

This collection of information is required by 37 CFR 3.73(b). The information is required to obtain or retain a benefit by the public which is to file (and by the USPTO to process) an application. Confidentiality is governed by 35 U.S.C. 122 and 37 CFR 1.11 and 1.14. This collection is estimated to take 12 minutes to complete, including gathering, preparing, and submitting the completed application form to the USPTO. Time will vary depending upon the individual case. Any comments on the amount of time you require to complete this form and/or suggestions for reducing this burden, should be sent to the Chief Information Officer, U.S. Patent and Trademark Office, U.S. Department of Commerce, P.O. Box 1450, Alexandria, VA 22313-1450. DO NOT SEND FEES OR COMPLETED FORMS TO THIS ADDRESS. **SEND TO: Commissioner for Patents, P.O. Box 1450, Alexandria, VA 22313-1450.**

If you need assistance in completing the form, call 1-800-PTO-9199 and select option 2.

Under the Paperwork Reduction Act of 1995, no persons are required to respond to a collection of information unless it displays a valid OMB control number.

STATEMENT UNDER 37 CFR 3.73(c)

3. From: _____ To: _____

The document was recorded in the United States Patent and Trademark Office at

Reel _____, Frame _____, or for which a copy thereof is attached.

4. From: _____ To: _____

The document was recorded in the United States Patent and Trademark Office at

Reel _____, Frame _____, or for which a copy thereof is attached.

5. From: _____ To: _____

The document was recorded in the United States Patent and Trademark Office at

Reel _____, Frame _____, or for which a copy thereof is attached.

6. From: _____ To: _____

The document was recorded in the United States Patent and Trademark Office at

Reel _____, Frame _____, or for which a copy thereof is attached.

☐ Additional documents in the chain of title are listed on a supplemental sheet(s).

☑ As required by 37 CFR 3.73(c)(1)(i), the documentary evidence of the chain of title from the original owner to the assignee was, or concurrently is being, submitted for recordation pursuant to 37 CFR 3.11.

[NOTE: A separate copy (i.e., a true copy of the original assignment document(s)) must be submitted to Assignment Division in accordance with 37 CFR Part 3, to record the assignment in the records of the USPTO. See MPEP 302.08]

The undersigned (whose title is supplied below) is authorized to act on behalf of the assignee.

/Hugh Mansfield/	September 2, 2022
Signature	Date
Hugh Mansfield	55757
Printed or Typed Name	Title or Registration Number

[Page 2 of 2]

Privacy Act Statement

The **Privacy Act of 1974 (P.L. 93-579)** requires that you be given certain information in connection with your submission of the attached form related to a patent application or patent. Accordingly, pursuant to the requirements of the Act, please be advised that: (1) the general authority for the collection of this information is 35 U.S.C. 2(b)(2); (2) furnishing of the information solicited is voluntary; and (3) the principal purpose for which the information is used by the U.S. Patent and Trademark Office is to process and/or examine your submission related to a patent application or patent. If you do not furnish the requested information, the U.S. Patent and Trademark Office may not be able to process and/or examine your submission, which may result in termination of proceedings or abandonment of the application or expiration of the patent.

The information provided by you in this form will be subject to the following routine uses:

1. The information on this form will be treated confidentially to the extent allowed under the Freedom of Information Act (5 U.S.C. 552) and the Privacy Act (5 U.S.C 552a). Records from this system of records may be disclosed to the Department of Justice to determine whether disclosure of these records is required by the Freedom of Information Act.
2. A record from this system of records may be disclosed, as a routine use, in the course of presenting evidence to a court, magistrate, or administrative tribunal, including disclosures to opposing counsel in the course of settlement negotiations.
3. A record in this system of records may be disclosed, as a routine use, to a Member of Congress submitting a request involving an individual, to whom the record pertains, when the individual has requested assistance from the Member with respect to the subject matter of the record.
4. A record in this system of records may be disclosed, as a routine use, to a contractor of the Agency having need for the information in order to perform a contract. Recipients of information shall be required to comply with the requirements of the Privacy Act of 1974, as amended, pursuant to 5 U.S.C. 552a(m).
5. A record related to an International Application filed under the Patent Cooperation Treaty in this system of records may be disclosed, as a routine use, to the International Bureau of the World Intellectual Property Organization, pursuant to the Patent Cooperation Treaty.
6. A record in this system of records may be disclosed, as a routine use, to another federal agency for purposes of National Security review (35 U.S.C. 181) and for review pursuant to the Atomic Energy Act (42 U.S.C. 218(c)).
7. A record from this system of records may be disclosed, as a routine use, to the Administrator, General Services, or his/her designee, during an inspection of records conducted by GSA as part of that agency's responsibility to recommend improvements in records management practices and programs, under authority of 44 U.S.C. 2904 and 2906. Such disclosure shall be made in accordance with the GSA regulations governing inspection of records for this purpose, and any other relevant (*i.e.*, GSA or Commerce) directive. Such disclosure shall not be used to make determinations about individuals.
8. A record from this system of records may be disclosed, as a routine use, to the public after either publication of the application pursuant to 35 U.S.C. 122(b) or issuance of a patent pursuant to 35 U.S.C. 151. Further, a record may be disclosed, subject to the limitations of 37 CFR 1.14, as a routine use, to the public if the record was filed in an application which became abandoned or in which the proceedings were terminated and which application is referenced by either a published application, an application open to public inspection or an issued patent.
9. A record from this system of records may be disclosed, as a routine use, to a Federal, State, or local law enforcement agency, if the USPTO becomes aware of a violation or potential violation of law or regulation.

PTO/AIA/01 (06-12)
Approved for use through 11/30/2020. OMB 0651-0032
U.S. Patent and Trademark Office; U.S. DEPARTMENT OF COMMERCE
Under the Paperwork Reduction Act of 1995, no persons are required to respond to a collection of information unless it displays a valid OMB control number.

DECLARATION (37 CFR 1.63) FOR UTILITY OR DESIGN APPLICATION USING AN APPLICATION DATA SHEET (37 CFR 1.76)

Title of Invention	MODULAR FIBER OPTIC CASSETTE, SYSTEM AND METHOD

As the below named inventor, I hereby declare that:

This declaration is directed to:

☐ The attached application, or

☒ United States application or PCT international application number 16/143,831 filed on September 27, 2018.

The above-identified application was made or authorized to be made by me.

I believe that I am the original inventor or an original joint inventor of a claimed invention in the application.

I hereby acknowledge that any willful false statement made in this declaration is punishable under 18 U.S.C. 1001 by fine or imprisonment of not more than five (5) years, or both.

WARNING:

Petitioner/applicant is cautioned to avoid submitting personal information in documents filed in a patent application that may contribute to identity theft. Personal information such as social security numbers, bank account numbers, or credit card numbers (other than a check or credit card authorization form PTO-2038 submitted for payment purposes) is never required by the USPTO to support a petition or an application. If this type of personal information is included in documents submitted to the USPTO, petitioners/applicants should consider redacting such personal information from the documents before submitting them to the USPTO. Petitioner/applicant is advised that the record of a patent application is available to the public after publication of the application (unless a non-publication request in compliance with 37 CFR 1.213(a) is made in the application) or issuance of a patent. Furthermore, the record from an abandoned application may also be available to the public if the application is referenced in a published application or an issued patent (see 37 CFR 1.14). Checks and credit card authorization forms PTO-2038 submitted for payment purposes are not retained in the application file and therefore are not publicly available.

LEGAL NAME OF INVENTOR

Inventor: Vincent PILON Date (Optional): 10/01/2018

Signature:

Note: An application data sheet (PTO/SB/14 or equivalent), including naming the entire inventive entity, must accompany this form or must have been previously filed. Use an additional PTO/AIA/01 form for each additional inventor.

This collection of information is required by 35 U.S.C. 115 and 37 CFR 1.63. The information is required to obtain or retain a benefit by the public which is to file (and by the USPTO to process) an application. Confidentiality is governed by 35 U.S.C. 122 and 37 CFR 1.11 and 1.14. This collection is estimated to take 1 minute to complete, including gathering, preparing, and submitting the completed application form to the USPTO. Time will vary depending upon the individual case. Any comments on the amount of time you require to complete this form and/or suggestions for reducing this burden, should be sent to the Chief Information Officer, U.S. Patent and Trademark Office, U.S. Department of Commerce, P.O. Box 1450, Alexandria, VA 22313-1450. DO NOT SEND FEES OR COMPLETED FORMS TO THIS ADDRESS. **SEND TO: Commissioner for Patents, P.O. Box 1450, Alexandria, VA 22313-1450.**

If you need assistance in completing the form, call 1-800-PTO-9199 and select option 2.

PTO/AIA/14 (02-18)
Approved for use through 11/30/2020. OMB 0651-0032
U.S. Patent and Trademark Office; U.S. DEPARTMENT OF COMMERCE
Under the Paperwork Reduction Act of 1995, no persons are required to respond to a collection of information unless it contains a valid OMB control number.

Application Data Sheet 37 CFR 1.76	Attorney Docket Number	G13569-00523-HM
	Application Number	
Title of Invention	MODULAR FIBRE OPTIC CASSETTE, SYSTEM AND METHOD	

The application data sheet is part of the provisional or nonprovisional application for which it is being submitted. The following form contains the bibliographic data arranged in a format specified by the United States Patent and Trademark Office as outlined in 37 CFR 1.76.
This document may be completed electronically and submitted to the Office in electronic format using the Electronic Filing System (EFS) or the document may be printed and included in a paper filed application.

Secrecy Order 37 CFR 5.2:

☐ Portions or all of the application associated with this Application Data Sheet may fall under a Secrecy Order pursuant to 37 CFR 5.2 (Paper filers only. Applications that fall under Secrecy Order may not be filed electronically.)

Inventor Information:

Inventor 1 Remove

Legal Name

Prefix	Given Name	Middle Name	Family Name	Suffix
	VINCENT		PILON	

Residence Information (Select One) US Residency ● Non US Residency Active US Military Service

City	LACHINE	Country of Residence i	CA

Mailing Address of Inventor:

Address 1	350 40e AVENUE		
Address 2			
City	LACHINE	**State/Province**	QC
Postal Code	H8T 2G6	**Country** i	CA

All Inventors Must Be Listed - Additional Inventor Information blocks may be generated within this form by selecting the **Add** button. Add

Correspondence Information:

Enter either Customer Number or complete the Correspondence Information section below.
For further information see 37 CFR 1.33(a).

☐ **An Address is being provided for the correspondence Information of this application.**

Customer Number	25545		
Email Address	uspatents@lavery.ca	Add Email	Remove Email
Email Address	hmansfield@lavery.ca	Add Email	Remove Email

Application Information:

Title of the Invention	MODULAR FIBRE OPTIC CASSETTE, SYSTEM AND METHOD		
Attorney Docket Number	G13569-00523-HM	**Small Entity Status Claimed**	☐
Application Type	Nonprovisional		
Subject Matter	Utility		
Total Number of Drawing Sheets (if any)	13	**Suggested Figure for Publication (if any)**	

EFS Web 2.2.13

Under the Paperwork Reduction Act of 1995, no persons are required to respond to a collection of information unless it contains a valid OMB control number.

Application Data Sheet 37 CFR 1.76	Attorney Docket Number	G13569-00523-HM
	Application Number	
Title of Invention	MODULAR FIBRE OPTIC CASSETTE, SYSTEM AND METHOD	

Filing By Reference:

Only complete this section when filing an application by reference under 35 U.S.C. 111(c) and 37 CFR 1.57(a). Do not complete this section if application papers including a specification and any drawings are being filed. Any domestic benefit or foreign priority information must be provided in the appropriate section(s) below (i.e., "Domestic Benefit/National Stage Information" and "Foreign Priority Information").

For the purposes of a filing date under 37 CFR 1.53(b), the description and any drawings of the present application are replaced by this reference to the previously filed application, subject to conditions and requirements of 37 CFR 1.57(a).

Application number of the previously filed application	Filing date (YYYY-MM-DD)	Intellectual Property Authority or Country

Publication Information:

☐ Request Early Publication (Fee required at time of Request 37 CFR 1.219)

☐ **Request Not to Publish.** I hereby request that the attached application not be published under 35 U.S.C. 122(b) and certify that the invention disclosed in the attached application **has not and will not** be the subject of an application filed in another country, or under a multilateral international agreement, that requires publication at eighteen months after filing.

Representative Information:

Representative information should be provided for all practitioners having a power of attorney in the application. Providing this information in the Application Data Sheet does not constitute a power of attorney in the application (see 37 CFR 1.32).
Either enter Customer Number or complete the Representative Name section below. If both sections are completed the customer Number will be used for the Representative Information during processing.

Please Select One:	● Customer Number	US Patent Practitioner	○ Limited Recognition (37 CFR 11.9)
Customer Number	25545		

Domestic Benefit/National Stage Information:

This section allows for the applicant to either claim benefit under 35 U.S.C. 119(e), 120, 121, 365(c), or 386(c) or indicate National Stage entry from a PCT application. Providing benefit claim information in the Application Data Sheet constitutes the specific reference required by 35 U.S.C. 119(e) or 120, and 37 CFR 1.78.
When referring to the current application, please leave the "Application Number" field blank.

Prior Application Status	Pending		Remove
Application Number	Continuity Type	Prior Application Number	Filing or 371(c) Date (YYYY-MM-DD)
	Continuation of	17010113	2020-09-02

Under the Paperwork Reduction Act of 1995, no persons are required to respond to a collection of information unless it contains a valid OMB control number.

Application Data Sheet 37 CFR 1.76	Attorney Docket Number	G13569-00523-HM
	Application Number	
Title of Invention	MODULAR FIBRE OPTIC CASSETTE, SYSTEM AND METHOD	

Prior Application Status	Patented				Remove
Application Number	Continuity Type	Prior Application Number	Filing Date (YYYY-MM-DD)	Patent Number	Issue Date (YYYY-MM-DD)
17010113	Continuation of	16143831	2018-09-27	10795107	2020-10-06
Prior Application Status	Expired				Remove
Application Number	Continuity Type	Prior Application Number	Filing or 371(c) Date (YYYY-MM-DD)		
16143831	Claims benefit of provisional	62567339	2017-10-03		

Additional Domestic Benefit/National Stage Data may be generated within this form by selecting the **Add** button. Add

Foreign Priority Information:

This section allows for the applicant to claim priority to a foreign application. Providing this information in the application data sheet constitutes the claim for priority as required by 35 U.S.C. 119(b) and 37 CFR 1.55. When priority is claimed to a foreign application that is eligible for retrieval under the priority document exchange program (PDX)[i] the information will be used by the Office to automatically attempt retrieval pursuant to 37 CFR 1.55(i)(1) and (2). Under the PDX program, applicant bears the ultimate responsibility for ensuring that a copy of the foreign application is received by the Office from the participating foreign intellectual property office, or a certified copy of the foreign priority application is filed, within the time period specified in 37 CFR 1.55(g)(1).

Remove

Application Number	Country[i]	Filing Date (YYYY-MM-DD)	Access Code[i] (if applicable)

Additional Foreign Priority Data may be generated within this form by selecting the **Add** button. Add

Statement under 37 CFR 1.55 or 1.78 for AIA (First Inventor to File) Transition Applications

☐ This application (1) claims priority to or the benefit of an application filed before March 16, 2013 and (2) also contains, or contained at any time, a claim to a claimed invention that has an effective filing date on or after March 16, 2013.
NOTE: By providing this statement under 37 CFR 1.55 or 1.78, this application, with a filing date on or after March 16, 2013, will be examined under the first inventor to file provisions of the AIA.

Application Data Sheet 37 CFR 1.76	Attorney Docket Number	G13569-00523-HM
	Application Number	
Title of Invention	MODULAR FIBRE OPTIC CASSETTE, SYSTEM AND METHOD	

Authorization or Opt-Out of Authorization to Permit Access:

When this Application Data Sheet is properly signed and filed with the application, applicant has provided written authority to permit a participating foreign intellectual property (IP) office access to the instant application-as-filed (see paragraph A in subsection 1 below) and the European Patent Office (EPO) access to any search results from the instant application (see paragraph B in subsection 1 below).

Should applicant choose not to provide an authorization identified in subsection 1 below, applicant **must opt-out** of the authorization by checking the corresponding box A or B or both in subsection 2 below.

NOTE: This section of the Application Data Sheet is **ONLY** reviewed and processed with the **INITIAL** filing of an application. After the initial filing of an application, an Application Data Sheet cannot be used to provide or rescind authorization for access by a foreign IP office(s). Instead, Form PTO/SB/39 or PTO/SB/69 must be used as appropriate.

1. Authorization to Permit Access by a Foreign Intellectual Property Office(s)

A. Priority Document Exchange (PDX) - Unless box A in subsection 2 (opt-out of authorization) is checked, the undersigned hereby **grants the USPTO authority** to provide the European Patent Office (EPO), the Japan Patent Office (JPO), the Korean Intellectual Property Office (KIPO), the State Intellectual Property Office of the People's Republic of China (SIPO), the World Intellectual Property Organization (WIPO), and any other foreign intellectual property office participating with the USPTO in a bilateral or multilateral priority document exchange agreement in which a foreign application claiming priority to the instant patent application is filed, access to: (1) the instant patent application-as-filed and its related bibliographic data, (2) any foreign or domestic application to which priority or benefit is claimed by the instant application and its related bibliographic data, and (3) the date of filing of this Authorization. See 37 CFR 1.14(h)(1).

B. Search Results from U.S. Application to EPO - Unless box B in subsection 2 (opt-out of authorization) is checked, the undersigned hereby **grants the USPTO authority** to provide the EPO access to the bibliographic data and search results from the instant patent application when a European patent application claiming priority to the instant patent application is filed. See 37 CFR 1.14(h)(2).

The applicant is reminded that the EPO's Rule 141(1) EPC (European Patent Convention) requires applicants to submit a copy of search results from the instant application without delay in a European patent application that claims priority to the instant application.

2. Opt-Out of Authorizations to Permit Access by a Foreign Intellectual Property Office(s)

☐ A. Applicant **DOES NOT** authorize the USPTO to permit a participating foreign IP office access to the instant application-as-filed. If this box is checked, the USPTO will not be providing a participating foreign IP office with any documents and information identified in subsection 1A above.

☐ B. Applicant **DOES NOT** authorize the USPTO to transmit to the EPO any search results from the instant patent application. If this box is checked, the USPTO will not be providing the EPO with search results from the instant application.

NOTE: Once the application has published or is otherwise publicly available, the USPTO may provide access to the application in accordance with 37 CFR 1.14.

Under the Paperwork Reduction Act of 1995, no persons are required to respond to a collection of information unless it contains a valid OMB control number.

Application Data Sheet 37 CFR 1.76	Attorney Docket Number	G13569-00523-HM
	Application Number	
Title of Invention	MODULAR FIBRE OPTIC CASSETTE, SYSTEM AND METHOD	

Applicant Information:

Providing assignment information in this section does not substitute for compliance with any requirement of part 3 of Title 37 of CFR to have an assignment recorded by the Office.

Applicant 1 Remove

If the applicant is the inventor (or the remaining joint inventor or inventors under 37 CFR 1.45), this section should not be completed. The information to be provided in this section is the name and address of the legal representative who is the applicant under 37 CFR 1.43; or the name and address of the assignee, person to whom the inventor is under an obligation to assign the invention, or person who otherwise shows sufficient proprietary interest in the matter who is the applicant under 37 CFR 1.46. If the applicant is an applicant under 37 CFR 1.46 (assignee, person to whom the inventor is obligated to assign, or person who otherwise shows sufficient proprietary interest) together with one or more joint inventors, then the joint inventor or inventors who are also the applicant should be identified in this section. Clear

● Assignee	Legal Representative under 35 U.S.C. 117	Joint Inventor
Person to whom the inventor is obligated to assign.	Person who shows sufficient proprietary interest	

If applicant is the legal representative, indicate the authority to file the patent application, the inventor is:

Name of the Deceased or Legally Incapacitated Inventor:

If the Applicant is an Organization check here. ☒

Organization Name	BELDEN CANADA ULC		
Mailing Address Information For Applicant:			
Address 1	2310 ALFRED-NOBEL		
Address 2			
City	SAINT-LAURENT	**State/Province**	QC
Country	CA	Postal Code	H4S 2B4
Phone Number		Fax Number	
Email Address			

Additional Applicant Data may be generated within this form by selecting the Add button. Add

Assignee Information including Non-Applicant Assignee Information:

Providing assignment information in this section does not substitute for compliance with any requirement of part 3 of Title 37 of CFR to have an assignment recorded by the Office.

Under the Paperwork Reduction Act of 1995, no persons are required to respond to a collection of information unless it contains a valid OMB control number.

Application Data Sheet 37 CFR 1.76	Attorney Docket Number	G13569-00523-HM
	Application Number	
Title of Invention	MODULAR FIBRE OPTIC CASSETTE, SYSTEM AND METHOD	

Assignee 1

Complete this section if assignee information, including non-applicant assignee information, is desired to be included on the patent application publication. An assignee-applicant identified in the "Applicant Information" section will appear on the patent application publication as an applicant. For an assignee-applicant, complete this section only if identification as an assignee is also desired on the patent application publication.

Remove

If the Assignee or Non-Applicant Assignee is an Organization check here. ☐

Prefix	**Given Name**	Middle Name	**Family Name**	Suffix

Mailing Address Information For Assignee including Non-Applicant Assignee:

Address 1			
Address 2			
City		**State/Province**	
Country i		Postal Code	
Phone Number		Fax Number	
Email Address			

Additional Assignee or Non-Applicant Assignee Data may be generated within this form by selecting the Add button. Add

Signature:

Remove

NOTE: This Application Data Sheet must be signed in accordance with 37 CFR 1.33(b). **However, if this Application Data Sheet is submitted with the INITIAL filing of the application and either box A or B is not checked in subsection 2 of the "Authorization or Opt-Out of Authorization to Permit Access" section, then this form must also be signed in accordance with 37 CFR 1.14(c).**

This Application Data Sheet **must** be signed by a patent practitioner if one or more of the applicants is a **juristic entity** (e.g., corporation or association). If the applicant is two or more joint inventors, this form must be signed by a patent practitioner, **all** joint inventors who are the applicant, or one or more joint inventor-applicants who have been given power of attorney (e.g., see USPTO Form PTO/AIA/81) on behalf of **all** joint inventor-applicants.

See 37 CFR 1.4(d) for the manner of making signatures and certifications.

Signature	/HUGH MANSFIELD/			Date (YYYY-MM-DD)	2022-09-02
First Name	HUGH	Last Name	MANSFIELD	Registration Number	55757

Additional Signature may be generated within this form by selecting the Add button. Add

Application Data Sheet 37 CFR 1.76	Attorney Docket Number	G13569-00523-HM
	Application Number	
Title of Invention	MODULAR FIBRE OPTIC CASSETTE, SYSTEM AND METHOD	

This collection of information is required by 37 CFR 1.76. The information is required to obtain or retain a benefit by the public which is to file (and by the USPTO to process) an application. Confidentiality is governed by 35 U.S.C. 122 and 37 CFR 1.14. This collection is estimated to take 23 minutes to complete, including gathering, preparing, and submitting the completed application data sheet form to the USPTO. Time will vary depending upon the individual case. Any comments on the amount of time you require to complete this form and/or suggestions for reducing this burden, should be sent to the Chief Information Officer, U.S. Patent and Trademark Office, U.S. Department of Commerce, P.O. Box 1450, Alexandria, VA 22313-1450. DO NOT SEND FEES OR COMPLETED FORMS TO THIS ADDRESS. **SEND TO: Commissioner for Patents, P.O. Box 1450, Alexandria, VA 22313-1450.**

Privacy Act Statement

The Privacy Act of 1974 (P.L. 93-579) requires that you be given certain information in connection with your submission of the attached form related to a patent application or patent. Accordingly, pursuant to the requirements of the Act, please be advised that: (1) the general authority for the collection of this information is 35 U.S.C. 2(b)(2); (2) furnishing of the information solicited is voluntary; and (3) the principal purpose for which the information is used by the U.S. Patent and Trademark Office is to process and/or examine your submission related to a patent application or patent. If you do not furnish the requested information, the U.S. Patent and Trademark Office may not be able to process and/or examine your submission, which may result in termination of proceedings or abandonment of the application or expiration of the patent.

The information provided by you in this form will be subject to the following routine uses:

1 The information on this form will be treated confidentially to the extent allowed under the Freedom of Information Act (5 U.S.C. 552) and the Privacy Act (5 U.S.C. 552a). Records from this system of records may be disclosed to the Department of Justice to determine whether the Freedom of Information Act requires disclosure of these records.

2. A record from this system of records may be disclosed, as a routine use, in the course of presenting evidence to a court, magistrate, or administrative tribunal, including disclosures to opposing counsel in the course of settlement negotiations.

3 A record in this system of records may be disclosed, as a routine use, to a Member of Congress submitting a request involving an individual, to whom the record pertains, when the individual has requested assistance from the Member with respect to the subject matter of the record.

4. A record in this system of records may be disclosed, as a routine use, to a contractor of the Agency having need for the information in order to perform a contract. Recipients of information shall be required to comply with the requirements of the Privacy Act of 1974, as amended, pursuant to 5 U.S.C. 552a(m).

5. A record related to an International Application filed under the Patent Cooperation Treaty in this system of records may be disclosed, as a routine use, to the International Bureau of the World Intellectual Property Organization, pursuant to the Patent CooperationTreaty.

6. A record in this system of records may be disclosed, as a routine use, to another federal agency for purposes of National Security review (35 U.S.C. 181) and for review pursuant to the Atomic Energy Act (42 U.S.C. 218(c)).

7. A record from this system of records may be disclosed, as a routine use, to the Administrator, General Services, or his/her designee, during an inspection of records conducted by GSA as part of that agency's responsibility to recommend improvements in records management practices and programs, under authority of 44 U.S.C. 2904 and 2906. Such disclosure shall be made in accordance with the GSA regulations governing inspection of records for this purpose, and any other relevant (i.e., GSA or Commerce) directive. Such disclosure shall not be used to make determinations about individuals.

8. A record from this system of records may be disclosed, as a routine use, to the public after either publication of the application pursuant to 35 U.S.C. 122(b) or issuance of a patent pursuant to 35 U.S.C. 151. Further, a record may be disclosed, subject to the limitations of 37 CFR 1.14, as a routine use, to the public if the record was filed in an application which became abandoned or in which the proceedings were terminated and which application is referenced by either a published application, an application open to public inspections or an issued patent.

9. A record from this system of records may be disclosed, as a routine use, to a Federal, State, or local law enforcement agency, if the USPTO becomes aware of a violation or potential violation of law or regulation.

PTO/SB/08a (01-22)
Approved for use through 05/31/2024. OMB 0651-0031
U.S. Patent and Trademark Office; U.S. DEPARTMENT OF COMMERCE
Under the Paperwork Reduction Act of 1995, no persons are required to respond to a collection of information unless it contains a valid OMB control number.

INFORMATION DISCLOSURE STATEMENT BY APPLICANT (Not for submission under 37 CFR 1.99)		
	Application Number	
	Filing Date	
	First Named Inventor	Vincent PILON
	Art Unit	
	Examiner Name	
	Attorney Docket Number	G13569-00523-HM

U.S.PATENTS						Remove
Examiner Initial*	Cite No	Patent Number	Kind Code[1]	Issue Date	Name of Patentee or Applicant of cited Document	Pages,Columns,Lines where Relevant Passages or Relevant Figures Appear
	1	4792203	A	1988-12-20	Nelson et al.	
	2	7331722	B2	2008-02-19	Tan	
	3	7509015	B2	2009-05-24	Murano	
	4	8913866	B2	2014-12-16	Cote et al.	
	5	9008485	B2	2015-04-14	Ramirez et al.	
	6	9075216	B2	2015-07-07	Cote et al.	
	7	10215944	B2	2019-02-26	Sedor et al.	
	8	10281672	B1	2019-05-07	Mullsteff	

INFORMATION DISCLOSURE STATEMENT BY APPLICANT (Not for submission under 37 CFR 1.99)	Application Number	
	Filing Date	
	First Named Inventor	Vincent PILON
	Art Unit	
	Examiner Name	
	Attorney Docket Number	G13569-00523-HM

	9	10359595	B2	2019-07-23	Aramayo et al.	
	10	10514518	B2	2019-12-24	Livingston et al.	
	11	10598884	B2	2020-03-24	Fontaine et al.	
	12	10656359	B2	2020-05-19	Fontaine et al.	
	13	10768387	B2	2020-09-08	Pilon et al.	
	14	10795107	B2	2020-10-06	Pilon	
	15	11187864	B2	2021-11-30	Crawford et al.	

If you wish to add additional U.S. Patent citation information please click the Add button. Add

U.S.PATENT APPLICATION PUBLICATIONS Remove

Examiner Initial*	Cite No	Publication Number	Kind Code[1]	Publication Date	Name of Patentee or Applicant of cited Document	Pages,Columns,Lines where Relevant Passages or Relevant Figures Appear
	1	20020131730	A1	2002-09-19	Keeble et al.	
	2	20070131628	A1	2007-06-14	Mimlitch	

EFS Web 2.1.18

INFORMATION DISCLOSURE STATEMENT BY APPLICANT (Not for submission under 37 CFR 1.99)	Application Number	
	Filing Date	
	First Named Inventor	Vincent PILON
	Art Unit	
	Examiner Name	
	Attorney Docket Number	G13569-00523-HM

	3	20090290842	A1	2009-11-26	Bran de Leon et al.	
	4	20160033732	A1	2016-02-04	Giraud et al.	
	5	20160062050	A1	2016-03-03	Giraud et al.	
	6	20160062068	A1		Giraud et al.	
	7	20190004268	A1	2019-01-03	Vogel	
	8	20190101717	A1	2019-04-04	Pilon	
	9	20190107682	A1	2019-04-11	Aramayo et al.	
	10	20190162924	A1	2019-05-30	Fontaine et al.	
	11	20190187394	A1	2019-06-20	Fontaine et al.	
	12	20200131730	A1	2020-04-30	Spiro	

If you wish to add additional U.S. Published Application citation information please click the Add button. Add

FOREIGN PATENT DOCUMENTS Remove

EFS Web 2.1.18

INFORMATION DISCLOSURE STATEMENT BY APPLICANT (Not for submission under 37 CFR 1.99)	Application Number	
	Filing Date	
	First Named Inventor	Vincent PILON
	Art Unit	
	Examiner Name	
	Attorney Docket Number	G13569-00523-HM

Examiner Initial*	Cite No	Foreign Document Number[3]	Country Code[2] i	Kind Code[4]	Publication Date	Name of Patentee or Applicant of cited Document	Pages,Columns,Lines where Relevant Passages or Relevant Figures Appear	T[5]
	1							

If you wish to add additional Foreign Patent Document citation information please click the Add button Add

NON-PATENT LITERATURE DOCUMENTS Remove

Examiner Initials*	Cite No	Include name of the author (in CAPITAL LETTERS), title of the article (when appropriate), title of the item (book, magazine, journal, serial, symposium, catalog, etc), date, pages(s), volume-issue number(s), publisher, city and/or country where published.	T[5]
	1		

If you wish to add additional non-patent literature document citation information please click the Add button Add

EXAMINER SIGNATURE

Examiner Signature		Date Considered	

*EXAMINER: Initial if reference considered, whether or not citation is in conformance with MPEP 609. Draw line through a citation if not in conformance and not considered. Include copy of this form with next communication to applicant.

[1] See Kind Codes of USPTO Patent Documents at www.USPTO.GOV or MPEP 901.04. [2] Enter office that issued the document, by the two-letter code (WIPO Standard ST.3). [3] For Japanese patent documents, the indication of the year of the reign of the Emperor must precede the serial number of the patent document. [4] Kind of document by the appropriate symbols as indicated on the document under WIPO Standard ST.16 if possible. [5] Applicant is to place a check mark here if English language translation is attached.

EFS Web 2.1.18

INFORMATION DISCLOSURE STATEMENT BY APPLICANT (Not for submission under 37 CFR 1.99)	Application Number	
	Filing Date	
	First Named Inventor	Vincent PILON
	Art Unit	
	Examiner Name	
	Attorney Docket Number	G13569-00523-HM

CERTIFICATION STATEMENT

Please see 37 CFR 1.97 and 1.98 to make the appropriate selection(s):

That each item of information contained in the information disclosure statement was first cited in any communication from a foreign patent office in a counterpart foreign application not more than three months prior to the filing of the information disclosure statement. See 37 CFR 1.97(e)(1).

OR

☐ That no item of information contained in the information disclosure statement was cited in a communication from a foreign patent office in a counterpart foreign application, and, to the knowledge of the person signing the certification after making reasonable inquiry, no item of information contained in the information disclosure statement was known to any individual designated in 37 CFR 1.56(c) more than three months prior to the filing of the information disclosure statement. See 37 CFR 1.97(e)(2).

See attached certification statement.

The fee set forth in 37 CFR 1.17 (p) has been submitted herewith.

☒ A certification statement is not submitted herewith.

SIGNATURE

A signature of the applicant or representative is required in accordance with CFR 1.33, 10.18. Please see CFR 1.4(d) for the form of the signature.

Signature	/Hugh Mansfield/	Date (YYYY-MM-DD)	2022-09-02
Name/Print	Hugh Mansfield	Registration Number	55757

This collection of information is required by 37 CFR 1.97 and 1.98. The information is required to obtain or retain a benefit by the public which is to file (and by the USPTO to process) an application. Confidentiality is governed by 35 U.S.C. 122 and 37 CFR 1.14. This collection is estimated to take 1 hour to complete, including gathering, preparing and submitting the completed application form to the USPTO. Time will vary depending upon the individual case. Any comments on the amount of time you require to complete this form and/or suggestions for reducing this burden, should be sent to the Chief Information Officer, U.S. Patent and Trademark Office, U.S. Department of Commerce, P.O. Box 1450, Alexandria, VA 22313-1450. DO NOT SEND FEES OR COMPLETED FORMS TO THIS ADDRESS. **SEND TO: Commissioner for Patents, P.O. Box 1450, Alexandria, VA 22313-1450.**

EFS Web 2.1.18

Privacy Act Statement

The Privacy Act of 1974 (P.L. 93-579) requires that you be given certain information in connection with your submission of the attached form related to a patent application or patent. Accordingly, pursuant to the requirements of the Act, please be advised that: (1) the general authority for the collection of this information is 35 U.S.C. 2(b)(2); (2) furnishing of the information solicited is voluntary; and (3) the principal purpose for which the information is used by the U.S. Patent and Trademark Office is to process and/or examine your submission related to a patent application or patent. If you do not furnish the requested information, the U.S. Patent and Trademark Office may not be able to process and/or examine your submission, which may result in termination of proceedings or abandonment of the application or expiration of the patent.

The information provided by you in this form will be subject to the following routine uses:

1. The information on this form will be treated confidentially to the extent allowed under the Freedom of Information Act (5 U.S.C. 552) and the Privacy Act (5 U.S.C. 552a). Records from this system of records may be disclosed to the Department of Justice to determine whether the Freedom of Information Act requires disclosure of these record s.

2. A record from this system of records may be disclosed, as a routine use, in the course of presenting evidence to a court, magistrate, or administrative tribunal, including disclosures to opposing counsel in the course of settlement negotiations.

3. A record in this system of records may be disclosed, as a routine use, to a Member of Congress submitting a request involving an individual, to whom the record pertains, when the individual has requested assistance from the Member with respect to the subject matter of the record.

4. A record in this system of records may be disclosed, as a routine use, to a contractor of the Agency having need for the information in order to perform a contract. Recipients of information shall be required to comply with the requirements of the Privacy Act of 1974, as amended, pursuant to 5 U.S.C. 552a(m).

5. A record related to an International Application filed under the Patent Cooperation Treaty in this system of records may be disclosed, as a routine use, to the International Bureau of the World Intellectual Property Organization, pursuant to the Patent Cooperation Treaty.

6. A record in this system of records may be disclosed, as a routine use, to another federal agency for purposes of National Security review (35 U.S.C. 181) and for review pursuant to the Atomic Energy Act (42 U.S.C. 218(c)).

7. A record from this system of records may be disclosed, as a routine use, to the Administrator, General Services, or his/her designee, during an inspection of records conducted by GSA as part of that agency's responsibility to recommend improvements in records management practices and programs, under authority of 44 U.S.C. 2904 and 2906. Such disclosure shall be made in accordance with the GSA regulations governing inspection of records for this purpose, and any other relevant (i.e., GSA or Commerce) directive. Such disclosure shall not be used to make determinations about individuals.

8. A record from this system of records may be disclosed, as a routine use, to the public after either publication of the application pursuant to 35 U.S.C. 122(b) or issuance of a patent pursuant to 35 U.S.C. 151. Further, a record may be disclosed, subject to the limitations of 37 CFR 1.14, as a routine use, to the public if the record was filed in an application which became abandoned or in which the proceedings were terminated and which application is referenced by either a published application, an application open to public inspections or an issued patent.

9. A record from this system of records may be disclosed, as a routine use, to a Federal, State, or local law enforcement agency, if the USPTO becomes aware of a violation or potential violation of law or regulation.

UNITED STATES
PATENT AND TRADEMARK OFFICE

P.O. Box 1450
Alexandria, VA 22313 - 1450
www.uspto.gov

ELECTRONIC ACKNOWLEDGEMENT RECEIPT

APPLICATION #	RECEIPT DATE / TIME	ATTORNEY DOCKET #
17/929,566	**09/02/2022 05:00:56 PM ET**	**G13569-00523-HM**

Title of Invention

MODULAR FIBRE OPTIC CASSETTE, SYSTEM AND METHOD

Application Information

APPLICATION TYPE	Utility - Nonprovisional Application under 35 USC 111(a)	PATENT #	-
CONFIRMATION #	3654	FILED BY	Regeline Jean Francois
PATENT CENTER #	60936284	FILING DATE	-
CUSTOMER #	25545	FIRST NAMED INVENTOR	VINCENT PILON
CORRESPONDENCE ADDRESS	-	AUTHORIZED BY	Hugh Mansfield

Documents

TOTAL DOCUMENTS: 10

DOCUMENT	PAGES	DESCRIPTION	SIZE (KB)
2501-USPTO-ADS-.pdf	8	Application Data Sheet	1231 KB
2501-USPTO-Transmittal.pdf	2	Transmittal of New Application	274 KB
2501-Declaration-Pilon.pdf	1	Oath or Declaration filed	322 KB
POA-BELDEN_ULC-.pdf	1	Power of Attorney	437 KB
2501-USPTO-Statement_Under_37_CFR_3-73.pdf	3	Assignee showing of ownership per 37 CFR 3.73	118 KB
2501-USPTO-APPLICATION-Cassette-As-Con-2-Filed.pdf	21	-	85 KB

CommScope Ex. 1033

2501-USPTO-APPLICATION-Cassette-As-Con-2-Filed-SPEC.pdf	(1-8)	8	Specification	43 KB
2501-USPTO-APPLICATION-Cassette-As-Con-2-Filed-CLM.pdf	(9-20)	12	Claims	43 KB
2501-USPTO-APPLICATION-Cassette-As-Con-2-Filed-ABST.pdf	(21-21)	1	Abstract	12 KB
2501-USPTO-Figures.pdf		13	Drawings-only black and white line drawings	1248 KB
2501-USPTO-FORM SB08 IDS.pdf		6	Information Disclosure Statement (IDS) Form (SB08)	1234 KB

Digest

DOCUMENT	MESSAGE DIGEST(SHA-512)
2501-USPTO-ADS-.pdf	94147C0C6A496C33527F9CEEDB45E339CB7948D020D1DF9D13C860255488EB033146D340A4EE43C01F7B5B934F949A7CD4FED6BA801E9A011CD52FE61E99A00B
2501-USPTO-Transmittal.pdf	388B747E4DF2A7618DB764B91D6F6BD295E4873282635D4A7AA61E690A344EF429D3AD8606E60DF9AD8EEDD5BEF475AFF39A629361DFF2394B3D1FE31F8987F2
2501-Declaration-Pilon.pdf	AFF0BE8B6BC56866E6E2C3504B085BE411C5B2BB2704228D7E9B50A9F0FAB1A17CE10B272353283CB1C7B3609EEB0AE6FC1C37312FC8DA62B8B0387BB6838B71
POA-BELDEN_ULC-.pdf	BF66F185B22C0D2CED5A8271C5C755B5E756D0C82FC8D3F3A31A9D64535868CAB3604C18ACBB34A9CBFB08670F981B11E79DFD27A363EAF208A8C085D4A55807

2501-USPTO-Statement_Under_37_CFR_3-73.pdf	A51CBB8F76F37F44C151FAB6B0E862A96EAC7DAE33844E082C8A4E75E1CDF26E24AC9EE9F035CCD57E5C6055080E4DE77B147CAD2F0988D94D6EBD47A3A46A3E
2501-USPTO-APPLICATION-Cassette-As-Con-2-Filed.pdf	F8BE11645ADC660B232F235373D1D7CE7BD84960E42D92C00CDB83E05D554D5050B47FA3BD76290F4CA5A9A1A6B0249CA0A8D16CCC3E05EE2D7211013A2F3C5E
2501-USPTO-APPLICATION-Cassette-As-Con-2-Filed-SPEC.pdf	D2835E222002B42F7557CB33FC2EB4FCBD13F2C76475D911D717A7EC585DEDC60C9827FF99D568896E9E1E08ABA98E49BF15829A829E5278709ADDAA8AEC2382
2501-USPTO-APPLICATION-Cassette-As-Con-2-Filed-CLM.pdf	D613DEC618600329FA4B9AF17A702851DB9AEF8F867739822005676625CE54354EA5B746E171114A516954DC2B42B2AA8DB6E8B52690504C865092902A81FA4C
2501-USPTO-APPLICATION-Cassette-As-Con-2-Filed-ABST.pdf	B2FDA415371BA59BE1FCD82E8C6E357BC92F25570A0052233E52DA02DF1BFEB18A6970908224A64FB108CCFC5FE32AB40062516CEABAC9E7D3040D16CC021C06
2501-USPTO-Figures.pdf	A463F3A08A24585B98CBBCBD3438E7A437DB34A8F063D2DF24BE96F72D99CE1F7A5925752704A84031AB2F9BAAFADE624D4B95E5DEA33A63DAC5CA006D768C17
2501-USPTO-FORM SB08 IDS.pdf	B8E72F6E79A83C7DB773393DE7DAC1742B487A7D063D51AEA06AF3E6D7C720F1C3B2F7404B074754404DBB574E75BE5DCEC012B1C34CE1B9660D79903172FF28

This Acknowledgement Receipt evidences receipt on the noted date by the USPTO of the indicated documents, characterized by the applicant, and including page counts, where applicable. It serves as evidence of receipt similar to a Post Card, as described in MPEP 503.

New Applications Under 35 U.S.C. 111

If a new application is being filed and the application includes the necessary components for filing date (see 37 CFR 1.53(b)-(d) and MPEP 506), a Filing Receipt (37 CFR 1.54) will be issued in due course and the date shown on this Acknowledgement Receipt will establish the filing date of the application

National Stage of an International Application under 35 U.S.C. 371

If a timely submission to enter the national stage of an international application is compliant with the conditions of 35 U.S.C. 371 and other applicable requirements a Form PCT/DO/EO/903 indicating acceptance of the application as a national stage submission under 35 U.S.C. 371 will be issued in addition to the Filing Receipt, in due course.

New International Application Filed with the USPTO as a Receiving Office

If a new international application is being filed and the international application includes the necessary components for an

international filing date (see PCT Article 11 and MPEP 1810), a Notification of the International Application Number and of the International Filing Date (Form PCT/RO/105) will be issued in due course, subject to prescriptions concerning national security, and the date shown on this Acknowledgement Receipt will establish the international filing date of the application.

PTO/AIA/80 (07-12)
Approved for use through 11/30/2014. OMB 0651-0035
U.S. Patent and Trademark Office; U.S DEPARTMENT OF COMMERCE
Under the Paperwork Reduction Act of 1995, no persons are required to respond to a collection of information unless it displays a valid OMB control number.

POWER OF ATTORNEY TO PROSECUTE APPLICATIONS BEFORE THE USPTO

I hereby revoke all previous powers of attorney given in the application identified in the attached statement under 37 CFR 3.73(c).

I hereby appoint:

[X] Practitioners associated with Customer Number: 25545

OR

[ ] Practitioner(s) named below (if more than ten patent practitioners are to be named, then a customer number must be used):

Name	Registration Number	Name	Registration Number

As attorney(s) or agent(s) to represent the undersigned before the United States Patent and Trademark Office (USPTO) in connection with any and all patent applications assigned only to the undersigned according to the USPTO assignment records or assignments documents attached to this form in accordance with 37 CFR 3.73(c).

Please change the correspondence address for the application identified in the attached statement under 37 CFR 3.73(c) to:

[X] The address associated with Customer Number: 25545

OR

[ ]

Firm or Individual Name			
Address			
City		State	Zip
Country			
Telephone		Email	

Assignee Name and Address: Belden Canada ULC
2310 Alfred-Nobel
Saint-Laurent, Quebec Canada H4S 2B4

A copy of this form, together with a statement under 37 CFR 3.73(c) (Form PTO/AIA/96 or equivalent) is required to be Filed in each application in which this form is used. The statement under 37 CFR 3.73(c) may be completed by one of The practitioners appointed in this form, and must identify the application in which this Power of Attorney is to be filed.

SIGNATURE of Assignee of Record

The individual whose signature and title is supplied below is authorized to act on behalf of the assignee

Signature	B. E. A	Date	August 31, 2020
Name	Brian E. Anderson	Telephone	314-854-8035
Title	Secretary		

This collection of information is required by 37 CFR 1.31, 1.32 and 1.33. The information is required to obtain or retain a benefit by the public which is to file (and by the USPTO to process) an application. Confidentiality is governed by 35 U.S.C. 122 and 37 CFR 1.11 and 1.14. This collection is estimated to take 3 minutes to complete, including gathering, preparing, and submitting the completed application form to the USPTO. Time will vary depending upon the individual case. Any comments on the amount of time you require to complete this form and/or suggestions for reducing this burden, should be sent to the Chief Information Officer, U.S. Patent and Trademark Office, U.S. Department of Commerce, P.O. Box 1450, Alexandria, VA 22313-1450. DO NOT SEND FEES OR COMPLETED FORMS TO THIS ADDRESS. **SEND TO: Commissioner for Patents, P.O. Box 1450, Alexandria, VA 22313-1450.**

If you need assistance in completing the form, call 1-800-PTO-9199 and select option 2.

TITLE OF THE INVENTION

MODULAR FIBER OPTIC CASSETTE, SYSTEM AND METHOD

CROSS REFERENCE TO RELATED APPLICATIONS

[0001] This application is a continuation application of U.S. patent application Serial No. 17/010,113 filed on September 2, 2020 which is in turn a continuation application of U.S. patent application Serial No. 16/143,831 filed on September 27, 2018, now US Patent No. 10,795,107 which in turn claims priority under 35 USC §119(e) of US provisional application serial No. 62/567,339 filed on October 3, 2017. All the above documents are incorporated herein in their entirety by reference.

FIELD OF THE INVENTION

[0001] The present invention relates to a modular fiber optic cassette, system and method. In particular, the present invention relates to a fiber optic cassette comprising a width of one or more standard width units and such that fiber optic cassettes of different widths can be arranged on the same tray while optimizing the use of tray space.

BACKGROUND OF THE INVENTION

[0002] The prior art discloses fiber optic cassettes or splice boxes for use in terminating fiber optic trunk cables and splitting them out to patch cables which are removeably arranged on tray systems within a rack mounted case. One drawback of these cassettes and tray systems is that they are typically preconfigured to terminate fiber optic cables comprising a single predetermined number of optic fibers. Another drawback is that cassettes which are used to terminate fiber optic cables comprising different numbers of optic fibers are generally incompatible with

one another and additionally require trays with different spacing, securing mechanisms and the like.

SUMMARY OF THE INVENTION

[0003] In order to address the above and other drawbacks there is provided a method for organising a tray comprising a front edge in a fiber optic interconnect system. The method comprises defining a standard width unit wherein a width of the front edge is substantially evenly divisible by the standard width unit, selecting a plurality of cassettes for installation on the tray from a set of cassettes having a plurality of different widths, wherein each of the different widths is evenly divisible by the standard width unit, and releasably securing the selected cassettes along the front edge of the tray. When arranged on the tray each of said selected cassettes is directly adjacent at least one other selected cassette.

BRIEF DESCRIPTION OF THE DRAWINGS

[0004] Figure 1 provides a right front perspective view of a modular fiber optic cassette and system mounted in a rack and in accordance with an illustrative embodiment of the present invention;

[0005] Figures 2A and 2B provide respectively a raised right front perspective view and a lowered right front perspective view of a modular fiber optic cassette in accordance with an illustrative embodiment of the present invention;

[0006] Figure 3 provides a front plan view of a modular fiber optic cassette system mounted in a rack in accordance with an illustrative embodiment of the present invention;

[0007] Figures 4A through 4D provide raised right front perspective views of a tray

populated with respectively six (6), four (4), three (3) and two (2) cassettes of different widths;

[0008] Figure 5A, 5B and 5C provide front plan views of a modular fiber optic cassette and system mounted in a rack respectively in accordance with first, second and third alternative embodiments of the present invention;

[0009] Figures 6A and 6B provide respectively a raised right front perspective view and a lowered right front perspective view of a modular fiber optic cassette in accordance with an alternative illustrative embodiment of the present invention; and

[0010] Figures 7A and 7B provide respectively a raised right front perspective view of a tray comprising a plurality modular fiber optic cassettes and a pair of cable management brackets and lowered right front perspective view of a cable management bracket in accordance with a second alternative illustrative embodiment of the present invention.

DETAILED DESCRIPTION OF THE ILLUSTRATIVE EMBODIMENTS

[0011] Referring now to Figure 1, a modular cassette system, generally referred to using the reference numeral 10, will now be described. The modular cassette comprises a slideable tray 12 illustratively mounted within a case 14. The case 14 comprises a top wall 16, a bottom wall 18 and a pair of opposed side walls 20 defining a tray receiving space 22 therebetween. The case 14 is illustratively mounted to the rails 24 of a rack via a pair of mounting brackets 26 wherein one of the brackets 26 is attached to an outer surface 28 of a respective one of the sidewalls 20. The front edges 30 of the walls 16, 18, 20 define an opening via which the tray receiving space 22 can be accessed. In a particular illustrated embodiment the system 10 is shown for mounting in a 19" rack, however in a particular embodiment the system 10, with suitable modifications, may be mounted equally in

a cross connect system, fiber bay or wall mount or the like.

[0012] Referring to Figures 2A and 2B in addition to Figure 1, the tray 12 receives a plurality of removable fiber optic module or cassettes 32 arranged side by side on an upper surface 34 thereof. In a first embodiment each fiber optic cassette 32 is secured to the tray 12 using a fastener comprising tabs 36 of inverted "T" cross section which engage with respective slots 38 machined or otherwise formed in the tray 12. A flexible tab 40 is also provided which comprises a boss 42 that engages a respective aperture 44 machined or otherwise formed in the tray 12 when the tabs 36 are engaged within their respective slots 38, thereby releasably securing the cassette 32 to the tray 12. In order to better orient the cassette 36 on the tray during installation, the tray 12 comprises a raised shoulder 46 which is received within a channel 48 moulded or otherwise formed in an underside 50 of the cassette 32.

[0013] Still referring to Figures 2A and 2B, each cassette 32 illustratively comprises a plurality of receptacle modules 52 each comprising a plurality of receptacles 54, illustratively LC Quad type receptacles, arranged in a row and exposed along a forward edge 56 of the cassette 32. The cassette 32 also illustratively terminates a fiber optic cable 58, such as a trunk cable or the like, comprising a plurality of optic fibers at a multi-fiber connector receiving receptacle 60 on a rearward edge. Each optic fiber of the fiber optic cable 58 is interconnected with a respective one of the receptacles 54 using an optic fiber segment 62 comprising a receptacle end which is terminated by a plug 64. The segments 62, which are typically longer than the distance between the forward edge and the rearward edge, are typically looped several times within the cassette 32, for example in a serpentine or the like. A person of ordinary skill in the art will understand that an optic fiber terminated with a plug (not shown) inserted into a selected one of the receptacles 54 will interconnect the optic fiber with a selected optic fiber segment 62.

[0014] Referring now to Figure 3 and Figures 4A through 4D, as discussed above,

each cassette 32 illustratively comprises a plurality of receptacle modules 52 each comprising four (4) receptacles 54. It is foreseen to provide a set of four (4) different cassette sizes to accommodate terminating fiber optic cables comprising different number of optic fibers. Each of the different cassette sizes of the set is based on an integer multiple of a standardised pitch or width unit W wherein one standardized width unit accommodates a single receptacle module 52 comprising four (4) receptacles 54. Illustratively, a 2W cassette 32 comprising two (2) modules 52 accommodating eight (8) optic fibers (Figure 4A) is provided, a 3W cassette 32 comprising three (3) modules 52 accommodating twelve (12) optic fibers (Figure 4B) is provided, a 4W cassette 32 comprising four (4) modules 52 accommodating sixteen (16) optic fibers (Figure 4C) is provided and a 6W cassette 32 comprising six (6) modules 52 accommodating twenty-four (24) optic fibers (Figure 4D) is provided for. The 2W, 3W, 4W and 6W cassettes 32 are typically used only with like cassettes 32 as illustrated and such that respectively six (6), four (4), three (3) and two (2) cassettes fit snuggly side by side on the 12W tray, although in a particular embodiment cassettes 32 of different widths could be used together.

[0015] Although the present illustrative embodiment In a particular embodiment the pitch/width W is based on a LC Quad (SC Duplex) technology footprint comprising four (4) connectors, in an alternative embodiment the pitch/width W could be based on a different technology footprint, including SC Duplex comprising two (2) connectors and MPO type connectors comprising *inter alia* multiple optic fibers such as MPO-12, MPO-16 and MPO-24.

[0016] Still referring to Figures 3, 4A through 4D in addition to Figure 1, a person of ordinary skill in the art will now understand that the disclosed system of cassettes 32 can be used to accommodate optic fiber cables 58 comprising different numbers of optic fibers 62 while ensuring that the same number of optic fibers 62 are accessible via the exposed receptacles 54.

[0017] Referring back to Figure 1, the spacing between adjacent slots 38 as well as the spacing between adjacent apertures 44 conforms to the standardised width unit W and such that the 2W, 3W, 4W and 6W cassettes 32 can be readily accommodated on the tray.

[0018] Referring now to Figure 5A, in a first alternative embodiment of the system each receptacle modules 52 comprises a duplex type module arranged vertically. Additionally in a first cassette size four (4) of such duplex modules 52 are provided to provide for eight (8) receptacles 54 for terminating a fiber optic cable (not shown) comprised of eight (8) optic fibers. Similar to the first embodiment discussed above, sizes for twelve (12), sixteen (16) and twenty four (24) receptacles are also provided. Again, as the width of the cassettes is an integer multiple of the same pitch/width, cassettes of different widths can be used in the same tray system or in some cases on the same tray without modification or changing the density of the receptacles 54 for terminating optic fibres.

[0019] Referring now to Figure 5B, in a second alternative embodiment of the system each receptacle modules 52 comprises a Quad type module arranged vertically. In a first cassette size two (2) of such quad modules 52 are provided to provide for eight (8) receptacles 54 for terminating a fiber optic cable (not shown) comprised of eight (8) optic fibers. Cassettes comprising three (3), four (4) and six (6) quad type modules 52 are provided to provide respectively twelve (12), sixteen (16) and twenty-four (24) receptacles. Again, as the width of the cassettes is an integer multiple of the same pitch/width, cassettes of different widths can be used in the same tray system or in some cases on the same tray without modification or changing the density of the receptacles 54 for terminating optic fibres.

[0020] Referring now to Figure 5C, in a third alternative embodiment of the system each receptacle modules 52 comprises a duplex type module arranged horizontally in two rows. In a first cassette size four (4) of such duplex modules 52 are provided

to provide for eight (8) receptacles 54 for terminating a fiber optic cable (not shown) comprised of eight (8) optic fibers. Cassettes comprising six (6), eight (8) and twelve (12) duplex type modules 52 are provided to provide respectively twelve (12), sixteen (16) and twenty-four (24) receptacles. Again, as the width of the cassettes is an integer multiple of the same pitch/width, cassettes of different widths can be used in the same tray system or in some cases on the same tray without modification or changing the density of the receptacles 54 for terminating optic fibres.

[0021] Referring now to Figures 6A and 6B in addition to Figure 1, in an alternative embodiment of an assembly for securing the cassettes 32 to the tray 12 the tray 12 is manufactured from a ferrous material such as steel or the like and the fastener comprises a magnet 66 which is attracted to the tray and embedded or otherwise secured within a recess 68 formed in the underside 50 of the cassette 32. The tray 12, further comprises a series of spaced slots 70 arranged along the raised shoulder 46 which engage bosses 72 to ensure correct positioning of the cassettes 32 on the tray 12.

[0022] Referring now to Figure 7A in a second alternative illustrative embodiment other equipment, such as a cable management bracket 74 can be provided with the same width W and such that they can be mounted to together with the cassettes 32 to the tray 12. In this regard, and with reference to Figure 7B in addition to Figure 7, the cable management bracket 74 is provided with tabs 76 comprising an inverted "T" cross section which engage with engage a slot 38 on the tray 12. A flexible tab 78 is provided which comprises a boss 80 that engages one of the apertures 44 in the tray 12 when the tab 76 is engaged within its respective slot 38, thereby releasable securing the cable management bracket 74 to the tray 12. In order to better orient the cable management bracket 74 on the tray during installation, the raised shoulder 46 of the tray 12 is received within a channel 82 moulded or otherwise formed in the underside 84 of the cable management bracket 74. Additionally, each cable management bracket 74 includes a cable management

loop 86 for receiving a plurality of optic fibres (not shown) which are terminated at respective ones of the receptacles 54. A flexible strip 88 across the mouth of the cable management loop 86 is provided to releasably retain the plurality of optic fibers within the loop 86.

[0023] Although the present invention has been described hereinabove by way of specific embodiments thereof, it can be modified, without departing from the spirit and nature of the subject invention as defined in the appended claims.

Claims

1. A fiber optic cassette tray for providing a plurality of different modular fiber optic cassette configurations in a fiber optic management system comprising:

a tray having a front tray end portion and configured to be slidingly received in at least a portion of the tray receiving space of a housing of a fiber optic management system;

wherein the tray is configured to support a plurality of different modular fiber optic cassette configurations when the tray is slidingly received in at least the portion of the tray receiving space;

wherein the plurality of different modular fiber optic cassette configurations include a selected plurality of fiber optic cassettes that are each configured to be arranged side by side along the front tray end portion of the tray such that an outer side edge of each of the selected plurality of fiber optic cassettes is directly adjacent to an outer edge of at least one other fiber optic cassette;

wherein each of the selected plurality of fiber optic cassettes include a plurality of fiber optic plug receiving receptacle portions;

wherein the tray is configured to be removably secured to each of the selected plurality of fiber optic cassettes when each of the plurality of fiber optic plug receiving receptacle portions are arranged side by side in a row along the front tray end portion;

wherein a first of the selected plurality of fiber optic cassettes comprises a first cassette width, as measured between outer side edges thereof, of two, three, four, or six standard width units;

wherein a second of the selected plurality of fiber optic cassettes comprises a second cassette width, as measured between outer side edges thereof, of two, three, four, or six standard width units; and

wherein the second cassette width is different from the first cassette width.

2. The fiber optic cassette tray of Claim 1, wherein the tray has a tray width that is configured to receive at least twelve standard cassette width units side by side.

3. The fiber optic cassette tray of Claim 1, wherein each of the fiber optic cassettes comprises a multi-fiber connector receiving receptacle portion arranged on a rear portion thereof and a plurality of optic fibers, one of the optic fibers being configured to interconnect a respective one of the optic plug receiving receptacle portions with the multi-fiber connector receiving receptacle portion.

4. The fiber optic cassette tray of Claim 1, wherein each of the fiber optic cassettes comprises four fiber optic plug receiving receptacle portions configured to be arranged side by side in a row along a front portion thereof for each standard width unit.

5. The fiber optic cassette tray of Claim 1, wherein the cassette tray is configured to be mounted in a rack.

6. The fiber optic cassette tray of Claim 1, wherein the tray comprises a cassette fastening portion that is configured to removably secure the tray to each cassette.

7. The fiber optic cassette tray of Claim 6, wherein the cassette fastening portion comprises a magnet.

8. The fiber optic cassette tray of Claim 1, wherein the tray is configured to be removably secured to an elongate cable management bracket that includes a bracket width that corresponds to one of the standard width units.

9. The fiber optic cassette tray of Claim 8, wherein the elongate cable management bracket includes a cable management loop that is configured to be positioned in front of and to a side of an optic plug receiving receptacle portion of a cassette when the cable management loop is removably secured to the tray.

10. The fiber optic cassette tray of Claim 1, wherein the tray is configured to be removably secured to each of the plurality of the selected plurality of the set of fiber optic cassettes arranged side by side in the row such that an outer side edge portion of each of the selected plurality of the set of fiber optic cassettes faces a directly adjacent outside edge portion of at least one other selected fiber optic cassette.

11. The fiber optic cassette tray of Claim 10, wherein an edge of the first tray end portion is substantially evenly divisible by a maximum of twelve (12) of the standard width units.

12. The fiber optic cassette tray of Claim 11, wherein a third cassette of the selected plurality of fiber optic cassettes comprising a third width different from the first cassette width and the second cassette width.

13. The fiber optic cassette tray of Claim 1, wherein the tray comprises an engagement feature configured to receive an engagement structure of the fiber optic cassettes.

14. The fiber optic cassette tray of Claim 13, wherein the engagement feature comprises a slot and the engagement structure comprises a tab.

15. The fiber optic cassette tray of Claim 14, wherein the tab is configured to have a T-shape cross section configured to engage the slot.

16. The fiber optic cassette tray of Claim 13, wherein engagement feature comprises an aperture and the engagement structure comprises a flexible tab.

17. The fiber optic cassette tray of Claim 16, wherein the flexible tab comprises a boss configure to engage the aperture.

18. A fiber optic cassette tray for providing a plurality of different modular fiber optic cassette configurations in a fiber optic management system comprising:

a tray having a cassette engaging portion and configured to be slidingly received in at least a portion of the tray receiving space of a housing of a fiber optic management system;

wherein the tray is configured to support a plurality of different modular fiber optic cassette configurations when the tray is slidingly received in at least the portion of the tray receiving space;

wherein the plurality of different modular fiber optic cassette configurations includes a selected plurality of fiber optic cassettes that are each configured to be arranged side by side along the cassette engaging portion of the tray such that an outer side edge of each of the selected plurality of fiber optic cassettes adjacently faces an outer edge of at least one other fiber optic cassette;

wherein each of the selected plurality of fiber optic cassettes include a plurality of fiber optic plug receiving receptacle portions;

wherein the tray is configured to be removably secured to each of the selected plurality of fiber optic cassettes when each of the plurality of fiber optic plug receiving receptacle portions are arranged side by side in a row;

wherein a first of the selected plurality of fiber optic cassettes

comprises a first cassette width, as measured between outer side edges thereof, of two, three, four, and six standard width units;

wherein a second of the selected plurality of fiber optic cassettes comprises a second cassette width, as measured between outer side edges thereof, of two, three, four, and six standard width units; and

wherein the second cassette width is different from the first cassette width.

19. The fiber optic cassette tray of Claim 18, wherein the cassette engaging portion of the tray comprises a front tray end portion.

20. The fiber optic cassette tray of Claim 18, wherein the plurality of different modular fiber optic cassette configurations includes the selected plurality of fiber optic cassettes that are each configured to be arranged side by side along the cassette engaging portion of the tray such that the outer side edge of each of the selected plurality of fiber optic cassettes is directly adjacent to the outer edge of at least one other fiber optic cassette.

21. The fiber optic cassette tray of Claim 18, wherein the tray is configured to support the selected plurality of fiber optic cassettes that are each configured to be arranged side by side along the cassette engaging portion of the tray such that the outer side edge of each of the selected plurality of fiber optic cassettes is adjacent to the outer edge of at least one other fiber optic cassette.

22. The fiber optic cassette tray of Claim 18, wherein the tray is configured to support the selected plurality of fiber optic cassettes that are each configured to be arranged side by side along the cassette engaging portion of the tray such that the outer side edge of each of the selected plurality of fiber optic

cassettes is directly adjacent to the outer edge of at least one other fiber optic cassette.

23. The fiber optic cassette tray of Claim 18, wherein the tray is configured to be removably secured to each of the selected plurality of fiber optic cassettes when each of the plurality of fiber optic plug receiving receptacle portions are arranged side by side in a row along a front end portion of the tray.

24. The fiber optic cassette tray of Claim 18, wherein the tray has a tray width that is configured to receive at least twelve standard cassette width units side by side.

25. The fiber optic cassette tray of Claim 18, wherein each of the fiber optic cassettes comprises a multi-fiber connector receiving receptacle portion arranged on a rear portion thereof and a plurality of optic fibers, one of the optic fibers being configured to interconnect a respective one of the optic plug receiving receptacle portions with the multi-fiber connector receiving receptacle portion.

26. The fiber optic cassette tray of Claim 18, wherein each of the fiber optic cassettes comprises four fiber optic plug receiving receptacle portions configured to be arranged side by side in a row along a front portion thereof for each standard width unit.

27. The fiber optic cassette tray of Claim 18, wherein the tray is configured to be mounted in a rack.

28. The fiber optic cassette tray of Claim 18, wherein the tray comprises a cassette fastening portion that is configured to removably secure the tray to each cassette.

29. The fiber optic cassette tray of Claim 18, wherein the cassette fastening portion comprises a magnet.

30. The fiber optic cassette tray of Claim 18, wherein the tray is configured to be removably secured to an elongate cable management bracket that includes a bracket width that corresponds to one of the standard width units.

31. The fiber optic cassette tray of Claim 30, wherein the elongate cable management bracket includes a cable management loop that is configured to be positioned in front of and to a side of an optic plug receiving receptacle portion of a cassette when the cable management loop is removably secured to the tray.

32. The fiber optic cassette tray of Claim 18, wherein the tray is configured to be removably secured to each of the plurality of the selected plurality of the set of fiber optic cassettes arranged side by side in the row such that an outer side edge portion of each of the selected plurality of the set of fiber optic cassettes faces a directly adjacent outside edge portion of at least one other selected fiber optic cassette.

33. The fiber optic cassette tray of Claim 18, wherein a width of a front edge of the cassette engaging portion is substantially evenly divisible by a maximum of twelve (12) of the standard width units.

34. The fiber optic cassette tray of Claim 18, wherein a third cassette of the selected plurality of fiber optic cassettes comprising a third width different from the first cassette width and the second cassette width.

35. The fiber optic cassette tray of Claim 18, wherein the tray comprises an engagement feature configured to receive an engagement structure of the fiber optic cassettes.

36. The fiber optic cassette tray of Claim 35, wherein the engagement feature comprises a slot and the engagement structure comprises a tab.

37. The fiber optic cassette tray of Claim 36, wherein the tab is configured to have a T-shape cross section configured to engage the slot.

38. The fiber optic cassette tray of Claim 35, wherein the engagement feature comprises an aperture and the engagement structure comprises a flexible tab.

39. The fiber optic cassette tray of Claim 38, wherein the flexible tab comprises a boss configure to engage the aperture.

40. A tray for providing a plurality of different modular fiber optic cassette configurations in a fiber optic management system comprising:

a tray configured to fit a plurality of different modular fiber optic cassette configurations in a case of a fiber management system;

wherein the plurality of different modular fiber optic cassette configurations includes a selected plurality of fiber optic cassettes that are each configured to be arranged side by side along the tray such that an outer side edge of each of the selected plurality of fiber optic cassettes adjacently faces an outer edge of at least one other fiber optic cassette;

wherein each of the selected plurality of fiber optic cassettes includes a plurality of fiber optic plug receiving receptacle portions;

wherein the tray is configured to be removably secured to each of the selected plurality of fiber optic cassettes that are each configured to be

arranged side by side along the tray;

wherein a first of the selected plurality of fiber optic cassettes comprises a first cassette width, as measured between outer side edges thereof, of two, three, four, and six standard width units;

wherein a second of the selected plurality of fiber optic cassettes comprises a second cassette width, as measured between outer side edges thereof, of two, three, four, and six standard width units; and

wherein the second cassette width is different from the first cassette width.

41. The tray of Claim 40, wherein each of the selected plurality of fiber optic cassettes are configured to be arranged side by side along a cassette engaging portion of the tray.

42. The tray of Claim 40, wherein the cassette engaging portion comprises a shoulder and each of the selected plurality of fiber optic cassettes comprises a channel that is configured to receive the shoulder.

43. The tray of Claim 42, wherein the cassette engaging portion of the tray comprises a front tray end portion.

44. The tray of Claim 40, wherein the tray is configured to be slidingly received in at least portion of a tray receiving space of a case of a fiber optic management system.

45. The tray of Claim 40, wherein the plurality of different modular fiber optic cassette configurations includes the selected plurality of fiber optic cassettes that are each configured to be arranged side by side along the tray such that the outer side edge of each of the selected plurality of fiber optic cassettes is directly adjacent to the outer edge of at least one other fiber optic cassette.

46. The tray of Claim 40, wherein the tray is configured to support the selected plurality of fiber optic cassettes that are each configured to be arranged side by side along the tray such that the outer side edge of each of the selected plurality of fiber optic cassettes is adjacent to the outer edge of at least one other fiber optic cassette.

47. The tray of Claim 40, wherein the tray is configured to support the selected plurality of fiber optic cassettes that are each configured to be arranged side by side along the tray such that the outer side edge of each of the selected plurality of fiber optic cassettes is directly adjacent to the outer edge of at least one other fiber optic cassette.

48. The tray of Claim 40, wherein the tray is configured to support the selected plurality of fiber optic cassettes that are each configured to be arranged side by side along the tray such that the outer side edge of each of the selected plurality of fiber optic cassettes touches the outer edge of at least one other fiber optic cassette.

49. The tray of Claim 40, wherein the tray is configured to be removably secured to each of the selected plurality of fiber optic cassettes when each of the plurality of fiber optic plug receiving receptacle portions are arranged side by side in a row along a front end portion of the tray.

50. The tray of Claim 40, wherein the tray has a tray width that is configured to receive at least twelve standard width units side by side.

51. The tray of Claim 40, wherein the tray has first tray end portion, a second tray end portion spaced away from the first tray end portion so as to define a tray width extending between the first tray end portion and the second tray end

portion, and wherein the tray width is configured to fit at least twelve standard width units side by side along the tray.

52. The tray of Claim 40, wherein each of the fiber optic cassettes comprises a multi-fiber connector receiving receptacle portion arranged on a rear portion thereof and a plurality of optic fibers, one of the optic fibers being configured to interconnect a respective one of the optic plug receiving receptacle portions with the multi-fiber connector receiving receptacle portion.

53. The tray of Claim 40, wherein each of the fiber optic cassettes comprises four fiber optic plug receiving receptacle portions configured to be arranged side by side in a row along a front portion thereof for each standard width unit.

54. The tray of Claim 40, wherein the cassette tray is configured to be mounted in a rack.

55. The tray of Claim 40, wherein the cassette tray is configured to be mounted in a standard U-space rack.

56. The tray of Claim 40, wherein the tray comprises a cassette fastening portion that is configured to removably secure the tray to each cassette.

57. The tray of Claim 40, wherein the cassette fastening portion comprises a magnet.

58. The tray of Claim 40, wherein the tray is configured to be removably secured to an elongate cable management bracket that includes a bracket width that corresponds to one of the standard width units.

59. The tray of Claim 58, wherein the elongate cable management bracket includes a cable management loop that is configured to be positioned in front of and to a side of an optic plug receiving receptacle portion of a cassette when the cable management loop is removably secured to the tray.

60. The tray of Claim 40, wherein a third cassette of the selected plurality of fiber optic cassettes comprises a third width different from the first cassette width and the second cassette width.

61. The tray of Claim 40, wherein the tray comprises an engagement feature configured to receive an engagement structure of the fiber optic cassettes.

62. The tray of Claim 61, wherein the engagement feature comprises a slot and the engagement structure comprises a tab.

63. The tray of Claim 62, wherein the tab is configured to have a T-shape cross section configured to engage the slot.

64. The tray of Claim 61, wherein the engagement feature comprises an aperture and the engagement structure comprises a flexible tab.

65. The tray of Claim 64, wherein the flexible tab comprises a boss configure to engage the aperture.

Abstract

A method for organising a tray comprising a front edge in a fiber optic interconnect system is disclosed. The method comprises defining a standard width unit wherein a width of the front edge is substantially evenly divisible by the standard width unit, selecting a plurality of cassettes for installation on the tray from a set of cassettes having a plurality of different cassette widths as measured between outer side edges thereof, wherein each of the different cassette widths is evenly divisible by the standard width unit, and releasably securing said selected cassettes along the front edge of the tray, wherein when arranged on the tray an outer side edge of each of said selected cassettes is directly adjacent an outer side edge of at least one other selected cassette.

CommScope Ex. 1033

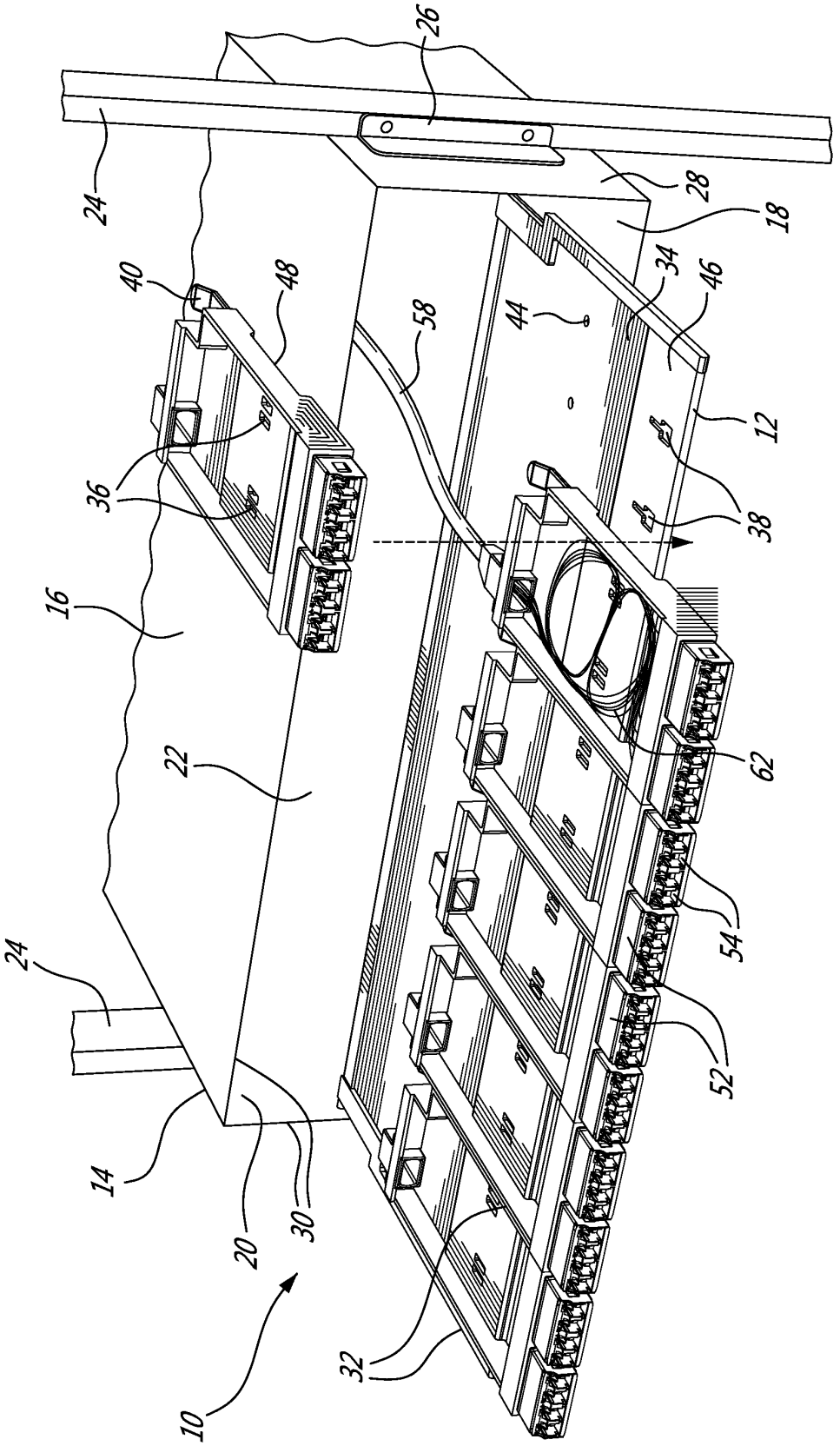

FIG. 1

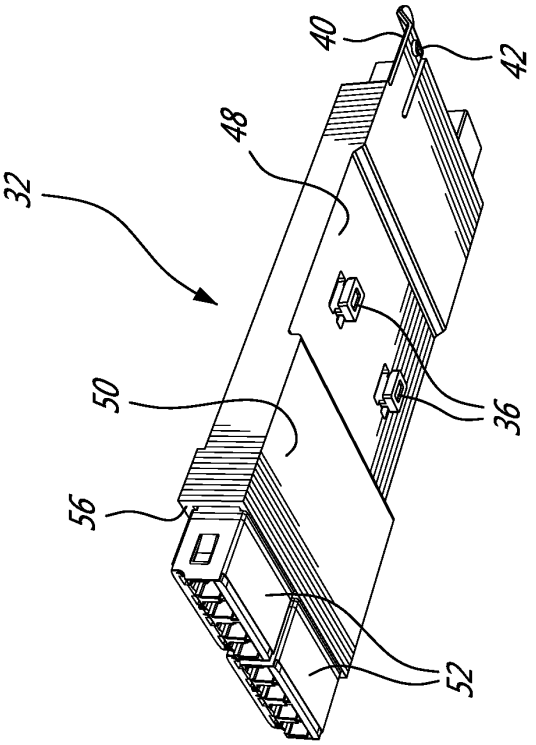

FIG. 2B

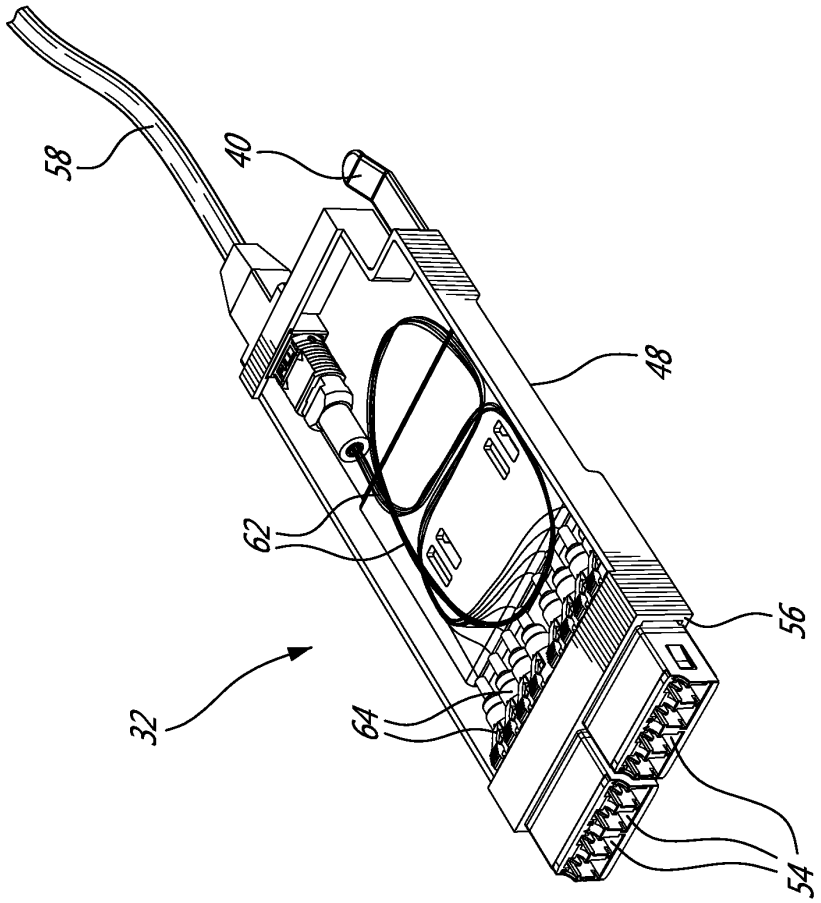

FIG. 2A

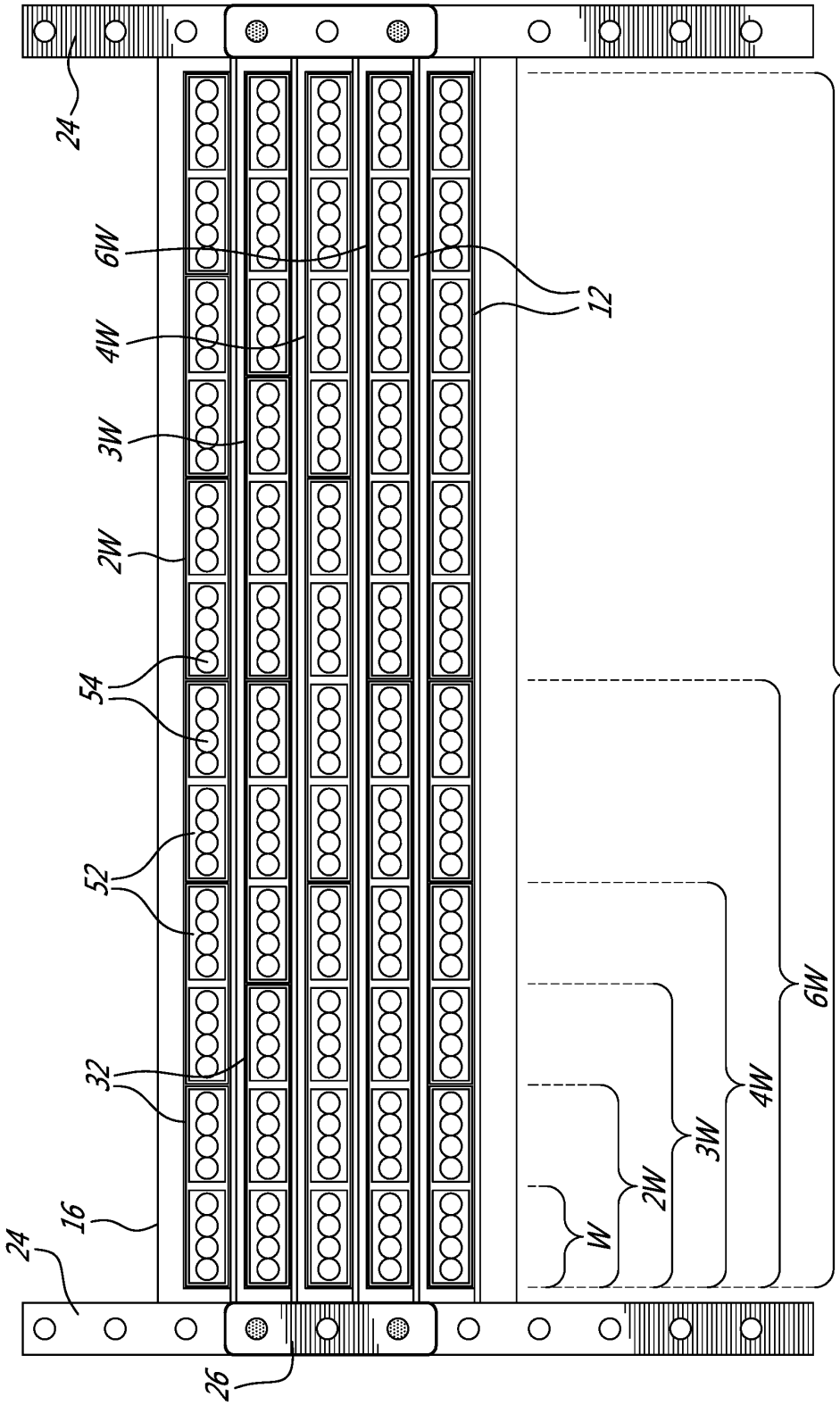

FIG. 3

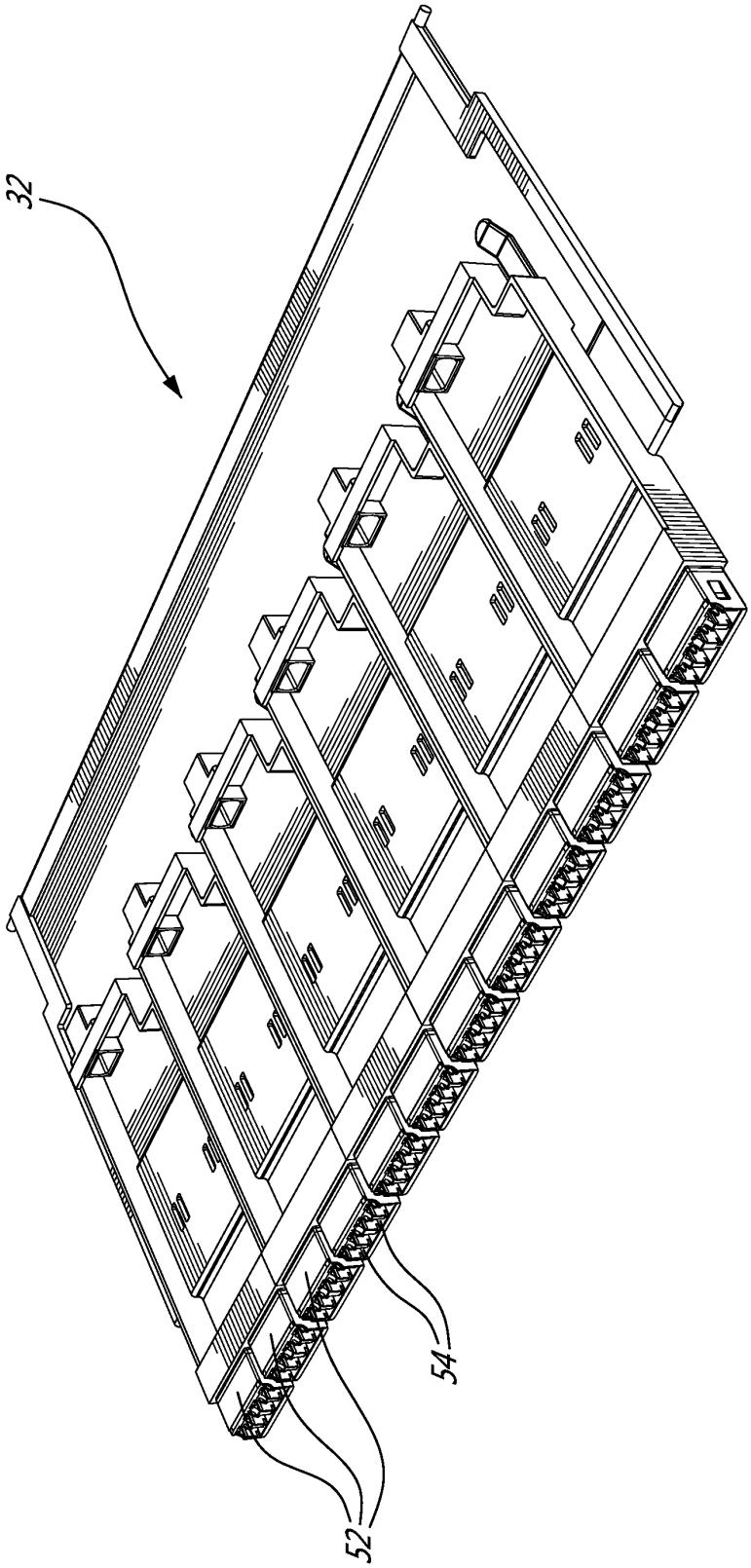

FIG. 4A

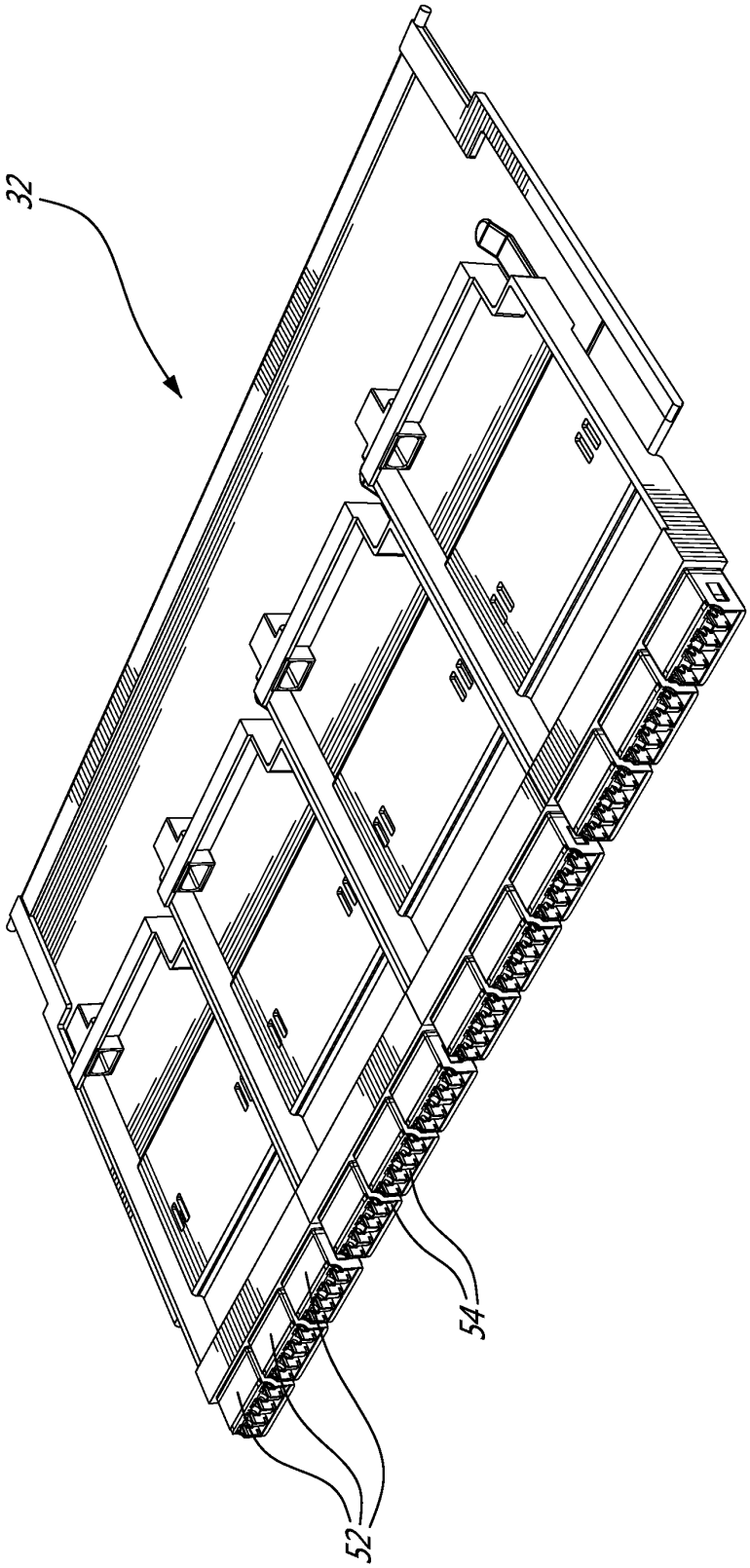

FIG. 4B

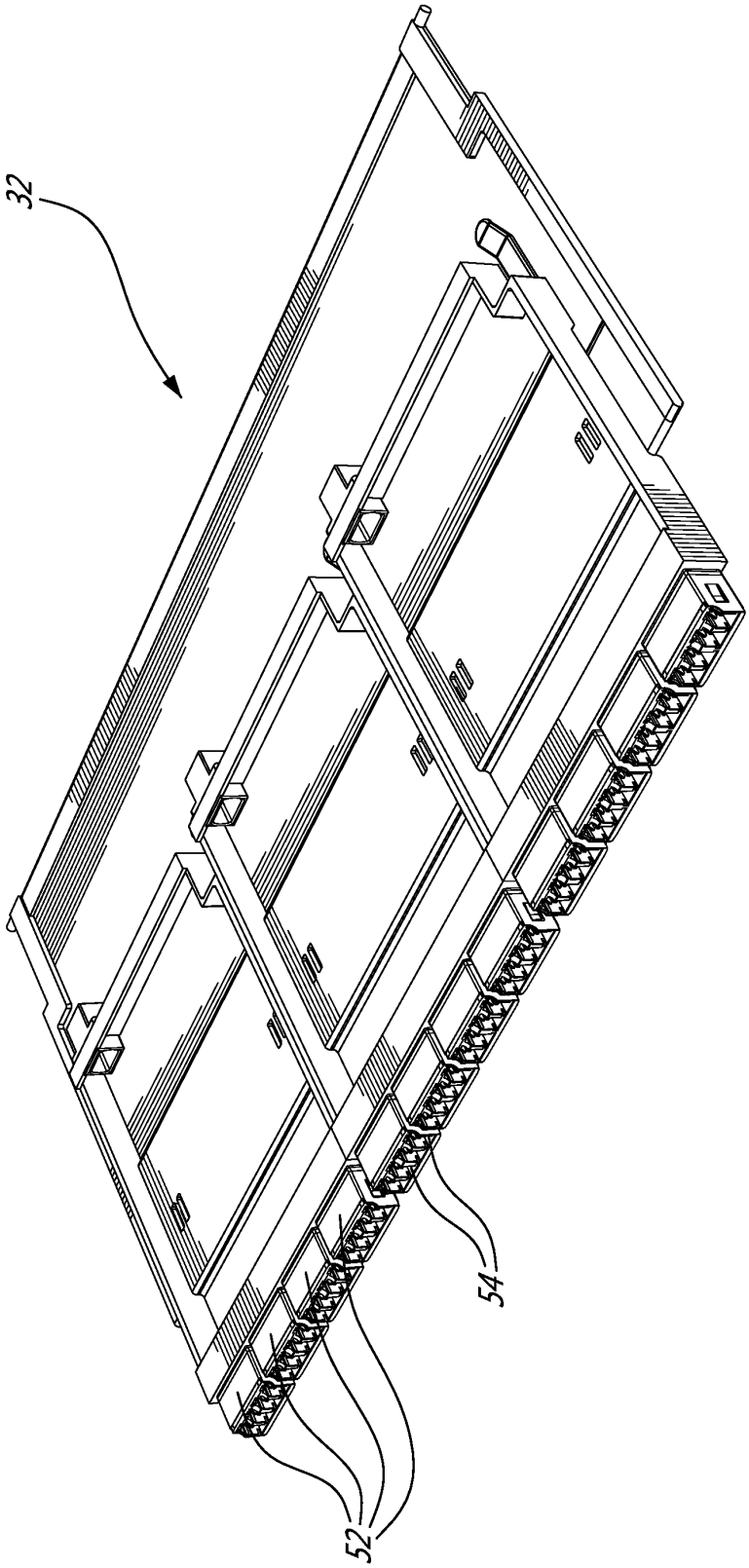

FIG. 4C

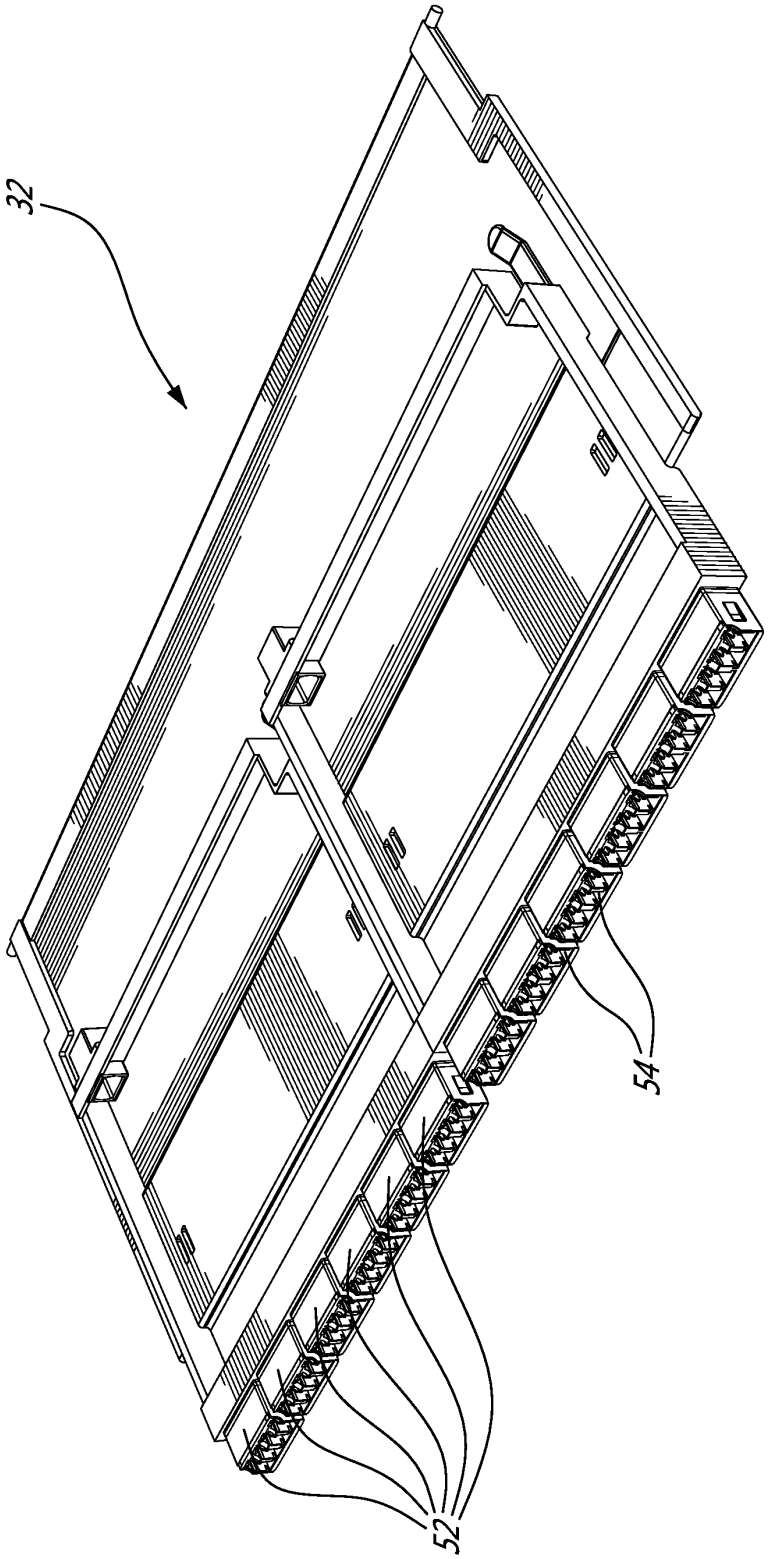

FIG. 4D

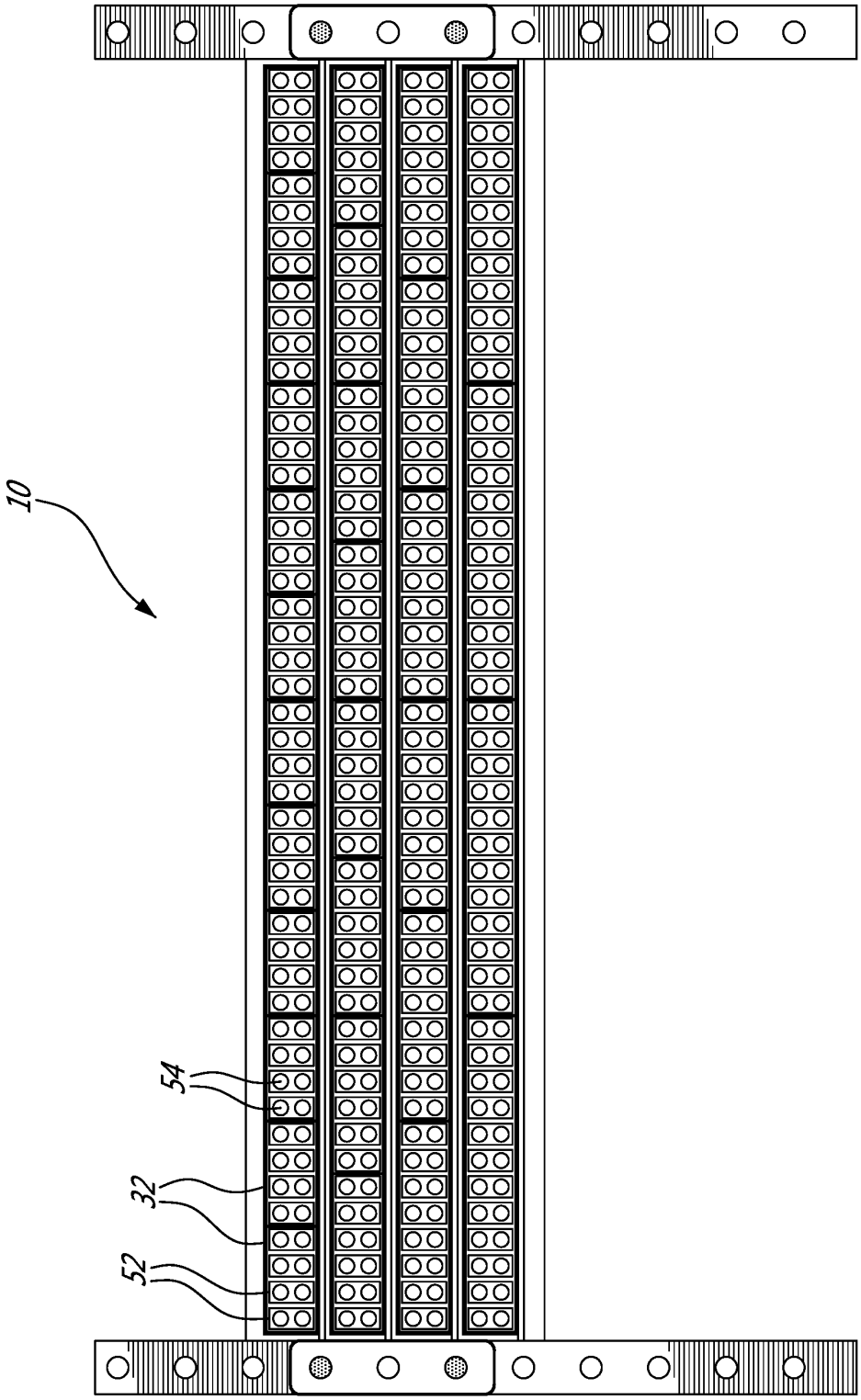

FIG. 5A

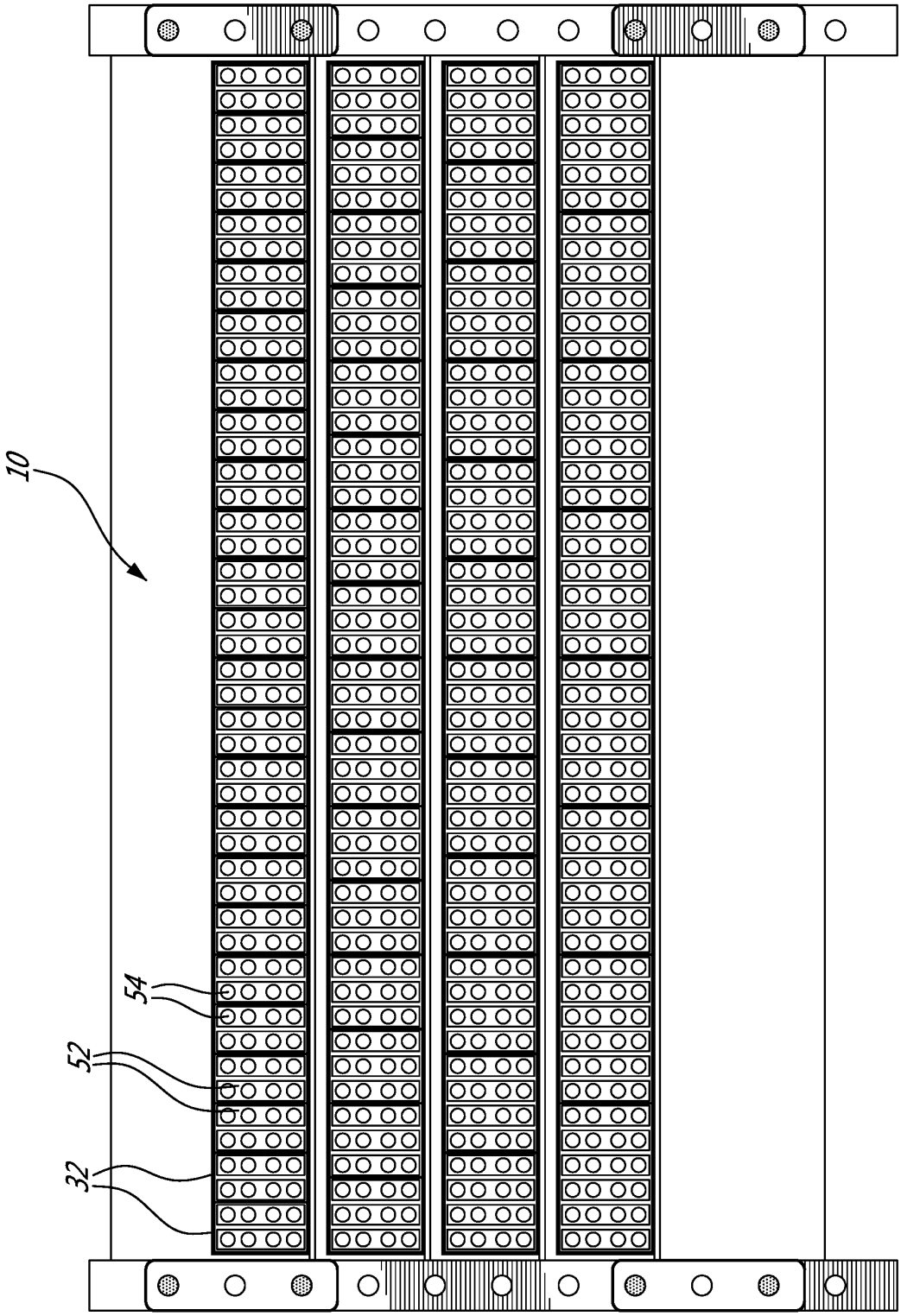

FIG. 5B

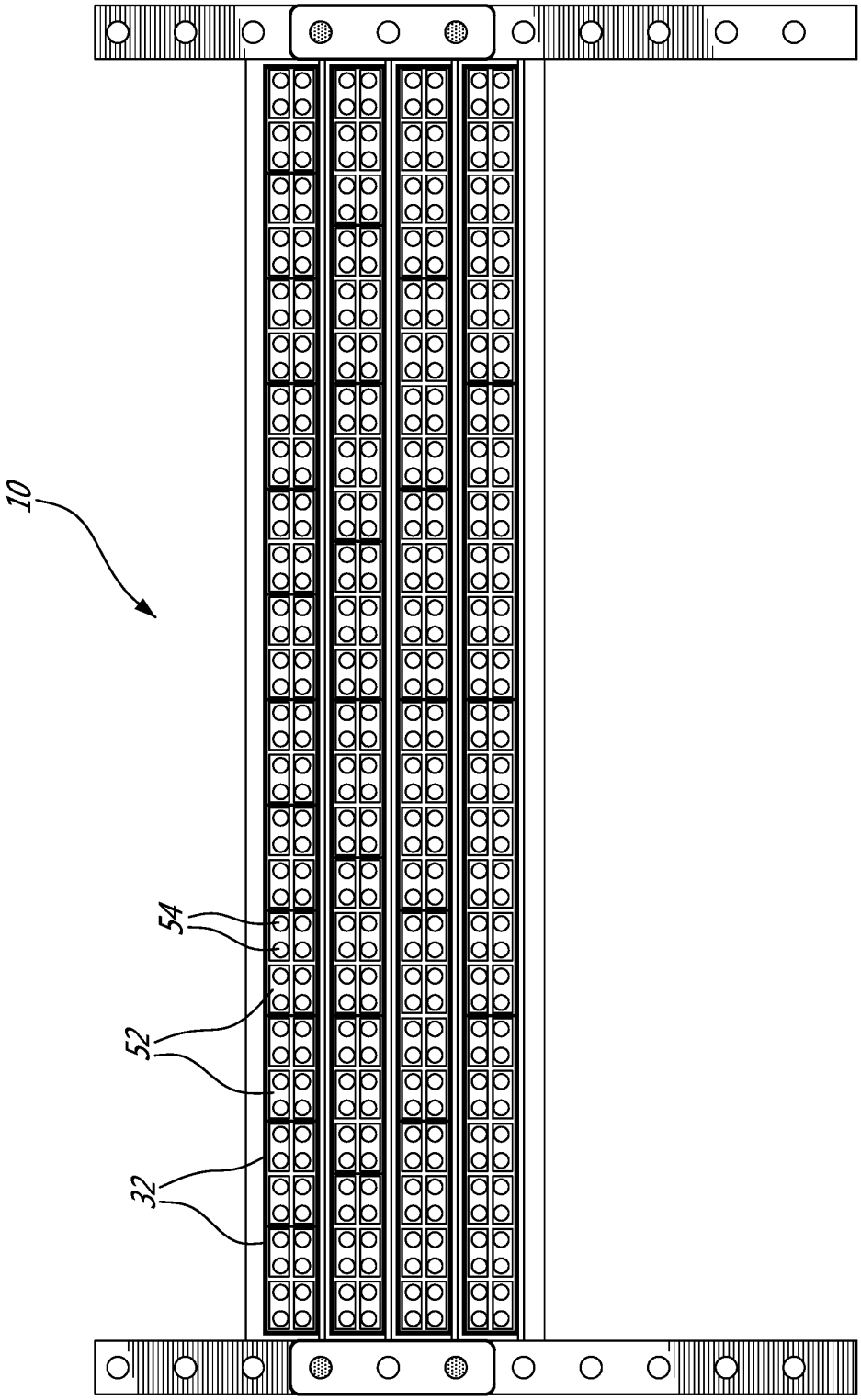

FIG. 5C

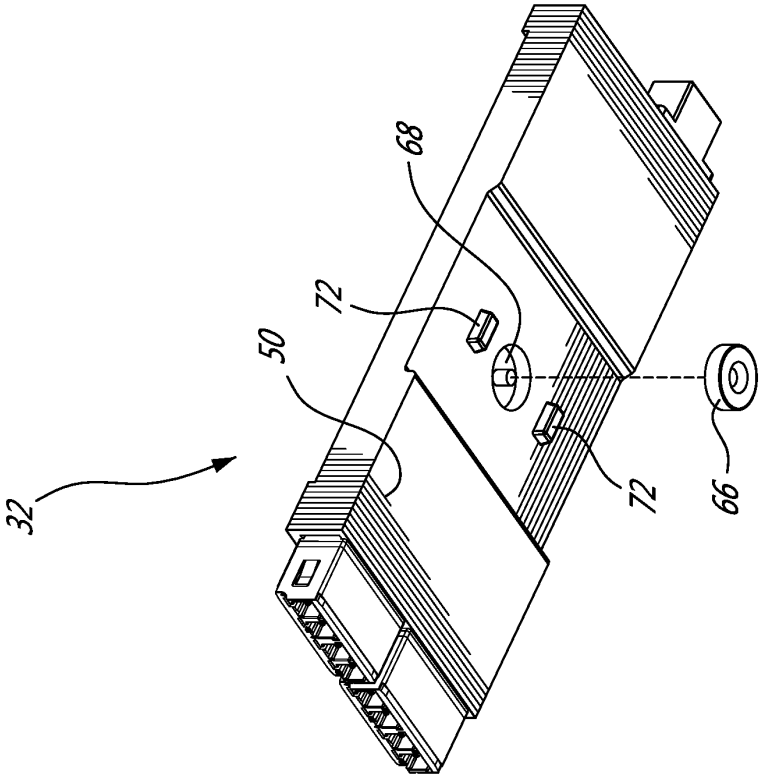

FIG. 6B

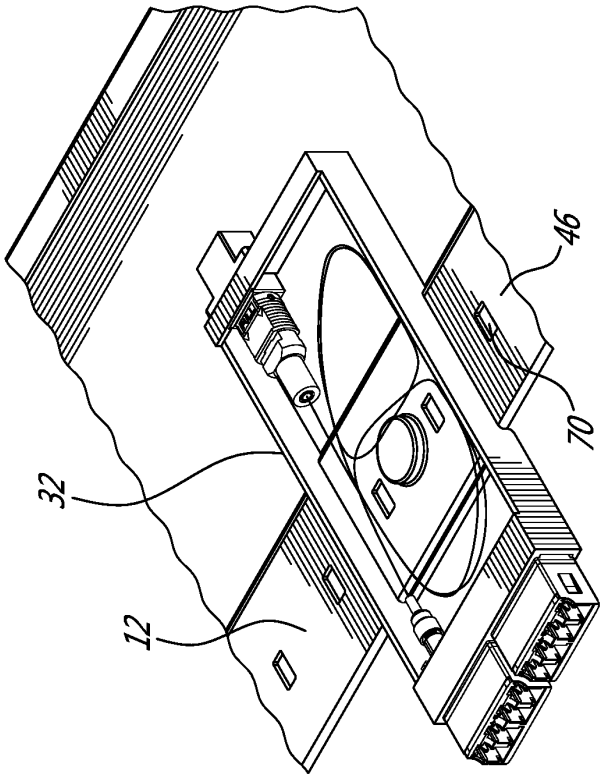

FIG. 6A

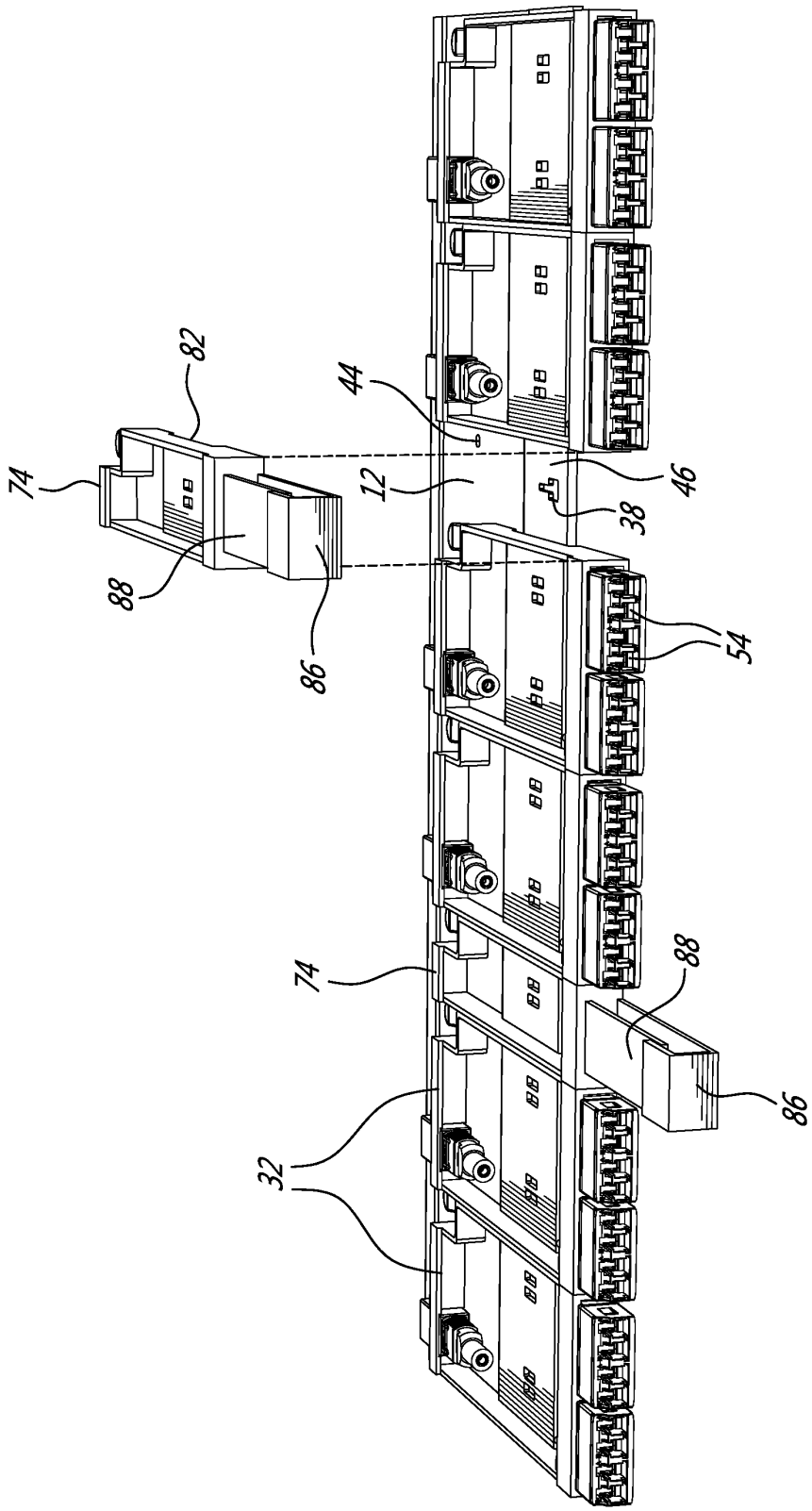

FIG. 7A

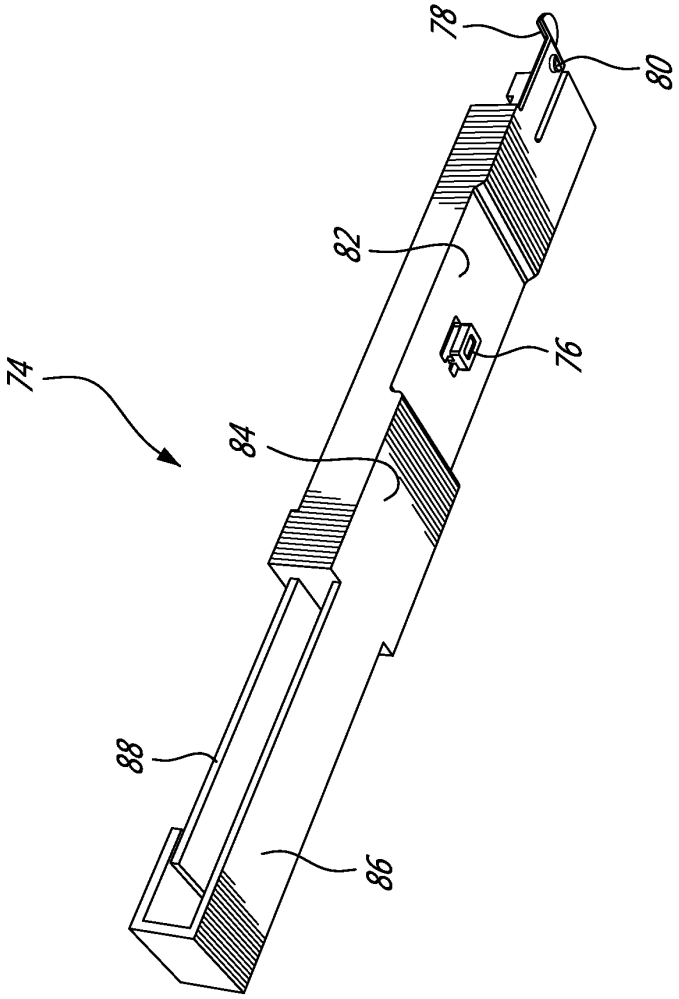

FIG. 7B

UNITED STATES PATENT AND TRADEMARK OFFICE

UNITED STATES DEPARTMENT OF COMMERCE
United States Patent and Trademark Office
Address: COMMISSIONER FOR PATENTS
P.O. Box 1450
Alexandria, Virginia 22313-1450
www.uspto.gov

APPLICATION NUMBER	FILING or 371(c) DATE	GRP ART UNIT	FIL FEE REC'D	ATTY.DOCKET.NO	TOT CLAIMS	IND CLAIMS
17/929,566	09/02/2022		6320	G13569-00523-HM	65	3

CONFIRMATION NO. 3654

FILING RECEIPT

OC000000048722173

25545
Lavery, De Billy, LLP
1 Place Ville Marie, Suite 4000
Montreal, QC H3B 4M4
CANADA

Date Mailed: 09/22/2022

Receipt is acknowledged of this non-provisional utility patent application. The application will be taken up for examination in due course. Applicant will be notified as to the results of the examination. Any correspondence concerning the application must include the following identification information: the U.S. APPLICATION NUMBER, FILING DATE, NAME OF FIRST INVENTOR, and TITLE OF INVENTION. Fees transmitted by check or draft are subject to collection.

Please verify the accuracy of the data presented on this receipt. If an error is noted on this Filing Receipt, please submit a written request for a corrected Filing Receipt, including a properly marked-up ADS showing the changes with strike-through for deletions and underlining for additions. If you received a "Notice to File Missing Parts" or other Notice requiring a response for this application, please submit any request for correction to this Filing Receipt with your reply to the Notice. When the USPTO processes the reply to the Notice, the USPTO will generate another Filing Receipt incorporating the requested corrections provided that the request is grantable.

Inventor(s)

VINCENT PILON, LACHINE, CANADA;

Applicant(s)

BELDEN CANADA ULC, SAINT-LAURENT, CANADA;

Power of Attorney: The patent practitioners associated with Customer Number 25545

Domestic Priority data as claimed by applicant

This application is a CON of 17/010,113 09/02/2020 PAT 11,435,542
which is a CON of 16/143,831 09/27/2018 PAT 10,795,107
which claims benefit of 62/567,339 10/03/2017

Foreign Applications for which priority is claimed (You may be eligible to benefit from the **Patent Prosecution Highway** program at the USPTO. Please see http://www.uspto.gov for more information.) - None.
Foreign application information must be provided in an Application Data Sheet in order to constitute a claim to foreign priority. See 37 CFR 1.55 and 1.76.

Permission to Access Application via Priority Document Exchange: Yes

Permission to Access Search Results: Yes

Applicant may provide or rescind an authorization for access using Form PTO/SB/39 or Form PTO/SB/69 as appropriate.

Projected Publication Date: 12/29/2022

Non-Publication Request: No

Early Publication Request: No
Title

MODULAR FIBRE OPTIC CASSETTE, SYSTEM AND METHOD

Preliminary Class

Statement under 37 CFR 1.55 or 1.78 for AIA (First Inventor to File) Transition Applications: No

PROTECTING YOUR INVENTION OUTSIDE THE UNITED STATES

Since the rights granted by a U.S. patent extend only throughout the territory of the United States and have no effect in a foreign country, an inventor who wishes patent protection in another country must apply for a patent in a specific country or in regional patent offices. Applicants may wish to consider the filing of an international application under the Patent Cooperation Treaty (PCT). An international (PCT) application generally has the same effect as a regular national patent application in each PCT-member country. The PCT process **simplifies** the filing of patent applications on the same invention in member countries, but **does not result** in a grant of "an international patent" and does not eliminate the need of applicants to file additional documents and fees in countries where patent protection is desired.

Almost every country has its own patent law, and a person desiring a patent in a particular country must make an application for patent in that country in accordance with its particular laws. Since the laws of many countries differ in various respects from the patent law of the United States, applicants are advised to seek guidance from specific foreign countries to ensure that patent rights are not lost prematurely.

Applicants also are advised that in the case of inventions made in the United States, the Director of the USPTO must issue a license before applicants can apply for a patent in a foreign country. The filing of a U.S. patent application serves as a request for a foreign filing license. The application's filing receipt contains further information and guidance as to the status of applicant's license for foreign filing.

Applicants may wish to consult the USPTO booklet, "General Information Concerning Patents" (specifically, the section entitled "Treaties and Foreign Patents") for more information on timeframes and deadlines for filing foreign patent applications. The guide is available either by contacting the USPTO Contact Center at 800-786-9199, or it can be viewed on the USPTO website at http://www.uspto.gov/web/offices/pac/doc/general/index.html.

For information on preventing theft of your intellectual property (patents, trademarks and copyrights), you may wish to consult the U.S. Government website, http://www.stopfakes.gov. Part of a Department of Commerce initiative, this website includes self-help "toolkits" giving innovators guidance on how to protect intellectual property in specific countries such as China, Korea and Mexico. For questions regarding patent enforcement issues, applicants may call the U.S. Government hotline at 1-866-999-HALT (1-866-999-4258).

LICENSE FOR FOREIGN FILING UNDER

Title 35, United States Code, Section 184

Title 37, Code of Federal Regulations, 5.11 & 5.15

GRANTED

The applicant has been granted a license under 35 U.S.C. 184, if the phrase "IF REQUIRED, FOREIGN FILING LICENSE GRANTED" followed by a date appears on this form. Such licenses are issued in all applications where the conditions for issuance of a license have been met, regardless of whether or not a license may be required as set forth in 37 CFR 5.15. The scope and limitations of this license are set forth in 37 CFR 5.15(a) unless an earlier license has been issued under 37 CFR 5.15(b). The license is subject to revocation upon written notification. The date indicated is the effective date of the license, unless an earlier license of similar scope has been granted under 37 CFR 5.13 or 5.14.

This license is to be retained by the licensee and may be used at any time on or after the effective date thereof unless it is revoked. This license is automatically transferred to any related applications(s) filed under 37 CFR 1.53(d). This license is not retroactive.

The grant of a license does not in any way lessen the responsibility of a licensee for the security of the subject matter as imposed by any Government contract or the provisions of existing laws relating to espionage and the national security or the export of technical data. Licensees should apprise themselves of current regulations especially with respect to certain countries, of other agencies, particularly the Office of Defense Trade Controls, Department of State (with respect to Arms, Munitions and Implements of War (22 CFR 121-128)); the Bureau of Industry and Security, Department of Commerce (15 CFR parts 730-774); the Office of Foreign AssetsControl, Department of Treasury (31 CFR Parts 500+) and the Department of Energy.

NOT GRANTED

No license under 35 U.S.C. 184 has been granted at this time, if the phrase "IF REQUIRED, FOREIGN FILING LICENSE GRANTED" DOES NOT appear on this form. Applicant may still petition for a license under 37 CFR 5.12, if a license is desired before the expiration of 6 months from the filing date of the application. If 6 months has lapsed from the filing date of this application and the licensee has not received any indication of a secrecy order under 35 U.S.C. 181, the licensee may foreign file the application pursuant to 37 CFR 5.15(b).

SelectUSA

The United States represents the largest, most dynamic marketplace in the world and is an unparalleled location for business investment, innovation, and commercialization of new technologies. The U.S. offers tremendous resources and advantages for those who invest and manufacture goods here. Through SelectUSA, our nation works to promote and facilitate business investment. SelectUSA provides information assistance to the international investor community; serves as an ombudsman for existing and potential investors; advocates on behalf of U.S. cities, states, and regions competing for global investment; and counsels U.S. economic development organizations on investment attraction best practices. To learn more about why the United States is the best country in the world to develop technology, manufacture products, deliver services, and grow your business, visit http://www.SelectUSA.gov or call +1-202-482-6800.

PATENT APPLICATION FEE DETERMINATION RECORD Substitute for Form PTO-875	Application or Docket Number 17/929,566

APPLICATION AS FILED - PART I

FOR	(Column 1) NUMBER FILED	(Column 2) NUMBER EXTRA	SMALL ENTITY RATE($)	SMALL ENTITY FEE($)	OR	OTHER THAN SMALL ENTITY RATE($)	OTHER THAN SMALL ENTITY FEE($)
BASIC FEE (37 CFR 1.16(a), (b), or (c))	N/A	N/A	N/A			N/A	320
SEARCH FEE (37 CFR 1.16(k), (i), or (m))	N/A	N/A	N/A			N/A	700
EXAMINATION FEE (37 CFR 1.16(o), (p), or (q))	N/A	N/A	N/A			N/A	800
TOTAL CLAIMS (37 CFR 1.16(i))	65 minus 20 =	* 45			OR	x 100 =	4500
INDEPENDENT CLAIMS (37 CFR 1.16(h))	3 minus 3 =	*				x =	0
APPLICATION SIZE FEE (37 CFR 1.16(s))	If the specification and drawings exceed 100 sheets of paper, the application size fee due is $310 ($155 for small entity) for each additional 50 sheets or fraction thereof. See 35 U.S.C. 41(a)(1)(G) and 37 CFR 1.16(s).						0
MULTIPLE DEPENDENT CLAIM PRESENT (37 CFR 1.16(j))							0
* If the difference in column 1 is less than zero, enter "0" in column 2.			TOTAL			TOTAL	1820

APPLICATION AS AMENDED - PART II

		(Column 1) CLAIMS REMAINING AFTER AMENDMENT		(Column 2) HIGHEST NUMBER PREVIOUSLY PAID FOR	(Column 3) PRESENT EXTRA	SMALL ENTITY RATE($)	SMALL ENTITY ADDITIONAL FEE($)	OR	OTHER THAN SMALL ENTITY RATE($)	OTHER THAN SMALL ENTITY ADDITIONAL FEE($)
AMENDMENT A	Total (37 CFR 1.16(i))	*	Minus	**	=	x =		OR	x =	
AMENDMENT A	Independent (37 CFR 1.16(h))	*	Minus	***	=	x =		OR	x =	
AMENDMENT A	Application Size Fee (37 CFR 1.16(s))									
AMENDMENT A	FIRST PRESENTATION OF MULTIPLE DEPENDENT CLAIM (37 CFR 1.16(j))							OR		
						TOTAL ADD'L FEE		OR	TOTAL ADD'L FEE	

		(Column 1) CLAIMS REMAINING AFTER AMENDMENT		(Column 2) HIGHEST NUMBER PREVIOUSLY PAID FOR	(Column 3) PRESENT EXTRA	RATE($)	ADDITIONAL FEE($)	OR	RATE($)	ADDITIONAL FEE($)
AMENDMENT B	Total (37 CFR 1.16(i))	*	Minus	**	=	x =		OR	x =	
AMENDMENT B	Independent (37 CFR 1.16(h))	*	Minus	***	=	x =		OR	x =	
AMENDMENT B	Application Size Fee (37 CFR 1.16(s))									
AMENDMENT B	FIRST PRESENTATION OF MULTIPLE DEPENDENT CLAIM (37 CFR 1.16(j))							OR		
						TOTAL ADD'L FEE		OR	TOTAL ADD'L FEE	

* If the entry in column 1 is less than the entry in column 2, write "0" in column 3.
** If the "Highest Number Previously Paid For" IN THIS SPACE is less than 20, enter "20".
*** If the "Highest Number Previously Paid For" IN THIS SPACE is less than 3, enter "3".
The "Highest Number Previously Paid For" (Total or Independent) is the highest found in the appropriate box in column 1.

CommScope Ex. 1033

UNITED STATES PATENT AND TRADEMARK OFFICE

UNITED STATES DEPARTMENT OF COMMERCE
United States Patent and Trademark Office
Address: COMMISSIONER FOR PATENTS
P.O. Box 1450
Alexandria, Virginia 22313-1450
www.uspto.gov

APPLICATION NUMBER	FILING OR 371(C) DATE	FIRST NAMED APPLICANT	ATTY. DOCKET NO./TITLE
17/929,566	09/02/2022	VINCENT PILON	G13569-00523-HM

CONFIRMATION NO. 3654

NEW OR REVISED PPD NOTICE

OC000000136381033

25545
Lavery, De Billy, LLP
1 Place Ville Marie, Suite 4000
Montreal, QC H3B 4M4
CANADA

NOTICE OF NEW OR REVISED PROJECTED PUBLICATION DATE

The above-identified application has a new or revised projected publication date. The current projected publication date for this application is 12/29/2022. If this is a new projected publication date (there was no previous projected publication date), the application has been cleared by Licensing & Review or a secrecy order has been rescinded and the application is now in the publication queue.

If this is a revised projected publication date (one that is different from a previously communicated projected publication date), the publication date has been revised due to processing delays in the USPTO or the abandonment and subsequent revival of an application. The application is anticipated to be published on a date that is more than six weeks different from the originally-projected publication date.

More detailed publication information is available through the private side of Patent Application Information Retrieval (PAIR) System. The direct link to access PAIR is currently http://pair.uspto.gov. Further assistance in electronically accessing the publication, or about PAIR, is available by calling the Patent Electronic Business Center at 1-866-217-9197.

Questions relating to this Notice should be directed to the Office of Data Management, Application Assistance Unit at (571) 272-4000, or (571) 272-4200, or 1-888-786-0101.

PART 1 - ATTORNEY/APPLICANT COPY
page 1 of 1

UNITED STATES PATENT AND TRADEMARK OFFICE

UNITED STATES DEPARTMENT OF COMMERCE
United States Patent and Trademark Office
Address: COMMISSIONER FOR PATENTS
P.O. Box 1450
Alexandria, Virginia 22313-1450
www.uspto.gov

APPLICATION NUMBER	FILING or 371(c) DATE	GRP ART UNIT	FIL FEE REC'D	ATTY.DOCKET.NO	TOT CLAIMS	IND CLAIMS
17/929,566	09/02/2022	OPAP	6320	G13569-00523-HM	65	3

CONFIRMATION NO. 3654

CORRECTED FILING RECEIPT

OC000000049884376

25545
Lavery, De Billy, LLP
1 Place Ville Marie, Suite 4000
Montreal, QC H3B 4M4
CANADA

Date Mailed: 10/19/2022

Receipt is acknowledged of this non-provisional utility patent application. The application will be taken up for examination in due course. Applicant will be notified as to the results of the examination. Any correspondence concerning the application must include the following identification information: the U.S. APPLICATION NUMBER, FILING DATE, NAME OF FIRST INVENTOR, and TITLE OF INVENTION. Fees transmitted by check or draft are subject to collection.

Please verify the accuracy of the data presented on this receipt. If an error is noted on this Filing Receipt, please submit a written request for a corrected Filing Receipt, including a properly marked-up ADS showing the changes with strike-through for deletions and underlining for additions. If you received a "Notice to File Missing Parts" or other Notice requiring a response for this application, please submit any request for correction to this Filing Receipt with your reply to the Notice. When the USPTO processes the reply to the Notice, the USPTO will generate another Filing Receipt incorporating the requested corrections provided that the request is grantable.

Inventor(s)

VINCENT PILON, LACHINE, CANADA;

Applicant(s)

BELDEN CANADA ULC, SAINT-LAURENT, CANADA;

Power of Attorney: The patent practitioners associated with Customer Number 25545

Domestic Priority data as claimed by applicant

This application is a CON of 17/010,113 09/02/2020 PAT 11,435,542
which is a CON of 16/143,831 09/27/2018 PAT 10,795,107
which claims benefit of 62/567,339 10/03/2017

Foreign Applications for which priority is claimed (You may be eligible to benefit from the **Patent Prosecution Highway** program at the USPTO. Please see http://www.uspto.gov for more information.) - None.
Foreign application information must be provided in an Application Data Sheet in order to constitute a claim to foreign priority. See 37 CFR 1.55 and 1.76.

Permission to Access Application via Priority Document Exchange: Yes

Permission to Access Search Results: Yes

Applicant may provide or rescind an authorization for access using Form PTO/SB/39 or Form PTO/SB/69 as appropriate.

If Required, Foreign Filing License Granted: 09/16/2022

The country code and number of your priority application, to be used for filing abroad under the Paris Convention, is **US 17/929,566**

Projected Publication Date: 12/29/2022

Non-Publication Request: No

Early Publication Request: No
Title

MODULAR FIBRE OPTIC CASSETTE, SYSTEM AND METHOD

Preliminary Class

385

Statement under 37 CFR 1.55 or 1.78 for AIA (First Inventor to File) Transition Applications: No

PROTECTING YOUR INVENTION OUTSIDE THE UNITED STATES

Since the rights granted by a U.S. patent extend only throughout the territory of the United States and have no effect in a foreign country, an inventor who wishes patent protection in another country must apply for a patent in a specific country or in regional patent offices. Applicants may wish to consider the filing of an international application under the Patent Cooperation Treaty (PCT). An international (PCT) application generally has the same effect as a regular national patent application in each PCT-member country. The PCT process **simplifies** the filing of patent applications on the same invention in member countries, but **does not result** in a grant of "an international patent" and does not eliminate the need of applicants to file additional documents and fees in countries where patent protection is desired.

Almost every country has its own patent law, and a person desiring a patent in a particular country must make an application for patent in that country in accordance with its particular laws. Since the laws of many countries differ in various respects from the patent law of the United States, applicants are advised to seek guidance from specific foreign countries to ensure that patent rights are not lost prematurely.

Applicants also are advised that in the case of inventions made in the United States, the Director of the USPTO must issue a license before applicants can apply for a patent in a foreign country. The filing of a U.S. patent application serves as a request for a foreign filing license. The application's filing receipt contains further information and guidance as to the status of applicant's license for foreign filing.

Applicants may wish to consult the USPTO booklet, "General Information Concerning Patents" (specifically, the section entitled "Treaties and Foreign Patents") for more information on timeframes and deadlines for filing foreign patent applications. The guide is available either by contacting the USPTO Contact Center at 800-786-9199, or it can be viewed on the USPTO website at http://www.uspto.gov/web/offices/pac/doc/general/index.html.

For information on preventing theft of your intellectual property (patents, trademarks and copyrights), you may wish to consult the U.S. Government website, http://www.stopfakes.gov. Part of a Department of Commerce initiative, this website includes self-help "toolkits" giving innovators guidance on how to protect intellectual property in specific countries such as China, Korea and Mexico. For questions regarding patent enforcement issues, applicants may call the U.S. Government hotline at 1-866-999-HALT (1-866-999-4258).

LICENSE FOR FOREIGN FILING UNDER

Title 35, United States Code, Section 184

Title 37, Code of Federal Regulations, 5.11 & 5.15

GRANTED

The applicant has been granted a license under 35 U.S.C. 184, if the phrase "IF REQUIRED, FOREIGN FILING LICENSE GRANTED" followed by a date appears on this form. Such licenses are issued in all applications where the conditions for issuance of a license have been met, regardless of whether or not a license may be required as set forth in 37 CFR 5.15. The scope and limitations of this license are set forth in 37 CFR 5.15(a) unless an earlier license has been issued under 37 CFR 5.15(b). The license is subject to revocation upon written notification. The date indicated is the effective date of the license, unless an earlier license of similar scope has been granted under 37 CFR 5.13 or 5.14.

This license is to be retained by the licensee and may be used at any time on or after the effective date thereof unless it is revoked. This license is automatically transferred to any related applications(s) filed under 37 CFR 1.53(d). This license is not retroactive.

The grant of a license does not in any way lessen the responsibility of a licensee for the security of the subject matter as imposed by any Government contract or the provisions of existing laws relating to espionage and the national security or the export of technical data. Licensees should apprise themselves of current regulations especially with respect to certain countries, of other agencies, particularly the Office of Defense Trade Controls, Department of State (with respect to Arms, Munitions and Implements of War (22 CFR 121-128)); the Bureau of Industry and Security, Department of Commerce (15 CFR parts 730-774); the Office of Foreign AssetsControl, Department of Treasury (31 CFR Parts 500+) and the Department of Energy.

NOT GRANTED

No license under 35 U.S.C. 184 has been granted at this time, if the phrase "IF REQUIRED, FOREIGN FILING LICENSE GRANTED" DOES NOT appear on this form. Applicant may still petition for a license under 37 CFR 5.12, if a license is desired before the expiration of 6 months from the filing date of the application. If 6 months has lapsed from the filing date of this application and the licensee has not received any indication of a secrecy order under 35 U.S.C. 181, the licensee may foreign file the application pursuant to 37 CFR 5.15(b).

SelectUSA

The United States represents the largest, most dynamic marketplace in the world and is an unparalleled location for business investment, innovation, and commercialization of new technologies. The U.S. offers tremendous resources and advantages for those who invest and manufacture goods here. Through SelectUSA, our nation works to promote and facilitate business investment. SelectUSA provides information assistance to the international investor community; serves as an ombudsman for existing and potential investors; advocates on behalf of U.S. cities, states, and regions competing for global investment; and counsels U.S. economic development organizations on investment attraction best practices. To learn more about why the United States is the best country in the world to develop technology, manufacture products, deliver services, and grow your business, visit http://www.SelectUSA.gov or call +1-202-482-6800.

UNITED STATES PATENT AND TRADEMARK OFFICE

UNITED STATES DEPARTMENT OF COMMERCE
United States Patent and Trademark Office
Address: COMMISSIONER FOR PATENTS
P.O. Box 1450
Alexandria, Virginia 22313-1450
www.uspto.gov

APPLICATION NUMBER	FILING OR 371(C) DATE	FIRST NAMED APPLICANT	ATTY. DOCKET NO./TITLE
17/929,566	09/02/2022	VINCENT PILON	G13569-00523-HM

CONFIRMATION NO. 3654

PUBLICATION NOTICE

OC000000137112709

25545
Lavery, De Billy, LLP
1 Place Ville Marie, Suite 4000
Montreal, QC H3B 4M4
CANADA

Title:MODULAR FIBRE OPTIC CASSETTE, SYSTEM AND METHOD

Publication No.US-2022-0413245-A1
Publication Date:12/29/2022

NOTICE OF PUBLICATION OF APPLICATION

The above-identified application will be electronically published as a patent application publication pursuant to 37 CFR 1.211, et seq. The patent application publication number and publication date are set forth above.

The publication may be accessed through the USPTO's publically available Searchable Databases via the Internet at www.uspto.gov. The direct link to access the publication is currently http://www.uspto.gov/patft/.

The publication process established by the Office does not provide for mailing a copy of the publication to applicant. A copy of the publication may be obtained from the Office upon payment of the appropriate fee set forth in 37 CFR 1.19(a)(1). Orders for copies of patent application publications are handled by the USPTO's Public Records Division. The Public Records Division can be reached by telephone at (571) 272-3150 or (800) 972-6382, by facsimile at (571) 273-3250, by mail addressed to the United States Patent and Trademark Office, Public Records Division, Alexandria, VA 22313-1450 or via the Internet.

In addition, information on the status of the application, including the mailing date of Office actions and the dates of receipt of correspondence filed in the Office, may also be accessed via the Internet through the Patent Electronic Business Center at www.uspto.gov using the public side of the Patent Application Information and Retrieval (PAIR) system. The direct link to access this status information is currently https://portal.uspto.gov/pair/PublicPair. Prior to publication, such status information is confidential and may only be obtained by applicant using the private side of PAIR.

Further assistance in electronically accessing the publication, or about PAIR, is available by calling the Patent Electronic Business Center at 1-866-217-9197.

Office of Data Managment, Application Assistance Unit (571) 272-4000, or (571) 272-4200, or 1-888-786-0101

UNITED STATES PATENT AND TRADEMARK OFFICE

UNITED STATES DEPARTMENT OF COMMERCE
United States Patent and Trademark Office
Address: COMMISSIONER FOR PATENTS
P.O. Box 1450
Alexandria, Virginia 22313-1450
www.uspto.gov

NOTICE OF ALLOWANCE AND FEE(S) DUE

25545 7590 03/08/2023
Lavery, De Billy, LLP
1 Place Ville Marie, Suite 4000
Montreal, QUEBEC H3B 4M4
CANADA

EXAMINER
PEACE, RHONDA S

ART UNIT	PAPER NUMBER
2874	

DATE MAILED: 03/08/2023

APPLICATION NO.	FILING DATE	FIRST NAMED INVENTOR	ATTORNEY DOCKET NO.	CONFIRMATION NO.
17/929,566	09/02/2022	VINCENT PILON	G13569-00523-HM	3654

TITLE OF INVENTION: MODULAR FIBRE OPTIC CASSETTE, SYSTEM AND METHOD

APPLN. TYPE	ENTITY STATUS	ISSUE FEE DUE	PUBLICATION FEE DUE	PREV. PAID ISSUE FEE	TOTAL FEE(S) DUE	DATE DUE
nonprovisional	UNDISCOUNTED	$1200	$0.00	$0.00	$1200	06/08/2023

THE APPLICATION IDENTIFIED ABOVE HAS BEEN EXAMINED AND IS ALLOWED FOR ISSUANCE AS A PATENT. PROSECUTION ON THE MERITS IS CLOSED. THIS NOTICE OF ALLOWANCE IS NOT A GRANT OF PATENT RIGHTS. THIS APPLICATION IS SUBJECT TO WITHDRAWAL FROM ISSUE AT THE INITIATIVE OF THE OFFICE OR UPON PETITION BY THE APPLICANT. SEE 37 CFR 1.313 AND MPEP 1308.

THE ISSUE FEE AND PUBLICATION FEE (IF REQUIRED) MUST BE PAID WITHIN THREE MONTHS FROM THE MAILING DATE OF THIS NOTICE OR THIS APPLICATION SHALL BE REGARDED AS ABANDONED. THIS STATUTORY PERIOD CANNOT BE EXTENDED. SEE 35 U.S.C. 151. THE ISSUE FEE DUE INDICATED ABOVE DOES NOT REFLECT A CREDIT FOR ANY PREVIOUSLY PAID ISSUE FEE IN THIS APPLICATION. IF AN ISSUE FEE HAS PREVIOUSLY BEEN PAID IN THIS APPLICATION (AS SHOWN ABOVE), THE RETURN OF PART B OF THIS FORM WILL BE CONSIDERED A REQUEST TO REAPPLY THE PREVIOUSLY PAID ISSUE FEE TOWARD THE ISSUE FEE NOW DUE.

HOW TO REPLY TO THIS NOTICE:

I. Review the ENTITY STATUS shown above. If the ENTITY STATUS is shown as SMALL or MICRO, verify whether entitlement to that entity status still applies.

If the ENTITY STATUS is the same as shown above, pay the TOTAL FEE(S) DUE shown above.

If the ENTITY STATUS is changed from that shown above, on PART B - FEE(S) TRANSMITTAL, complete section number 5 titled "Change in Entity Status (from status indicated above)".

For purposes of this notice, small entity fees are 40% the amount of undiscounted fees, and micro entity fees are 20% the amount of undiscounted fees.

II. PART B - FEE(S) TRANSMITTAL, or its equivalent, must be completed and returned to the United States Patent and Trademark Office (USPTO) with your ISSUE FEE and PUBLICATION FEE (if required). If you are charging the fee(s) to your deposit account, section "4b" of Part B - Fee(s) Transmittal should be completed. If an equivalent of Part B is filed, a request to reapply a previously paid issue fee must be clearly made, and delays in processing may occur due to the difficulty in recognizing the paper as an equivalent of Part B.

III. All communications regarding this application must give the application number. Please direct all communications prior to issuance to Mail Stop ISSUE FEE unless advised to the contrary.

IMPORTANT REMINDER: Maintenance fees are due in utility patents issuing on applications filed on or after Dec. 12, 1980. It is patentee's responsibility to ensure timely payment of maintenance fees when due. More information is available at www.uspto.gov/PatentMaintenanceFees.

PART B - FEE(S) TRANSMITTAL

Complete and send this form, together with applicable fee(s), by mail or fax, or via EFS-Web.

By mail, send to: Mail Stop ISSUE FEE
Commissioner for Patents
P.O. Box 1450
Alexandria, Virginia 22313-1450

By fax, send to: (571)-273-2885

INSTRUCTIONS: This form should be used for transmitting the ISSUE FEE and PUBLICATION FEE (if required). Blocks 1 through 5 should be completed where appropriate. All further correspondence including the Patent, advance orders and notification of maintenance fees will be mailed to the current correspondence address as indicated unless corrected below or directed otherwise in Block 1, by (a) specifying a new correspondence address; and/or (b) indicating a separate "FEE ADDRESS" for maintenance fee notifications.

CURRENT CORRESPONDENCE ADDRESS (Note: Use Block 1 for any change of address)

25545 7590 03/08/2023
Lavery, De Billy, LLP
1 Place Ville Marie, Suite 4000
Montreal, QUEBEC H3B 4M4
CANADA

Note: A certificate of mailing can only be used for domestic mailings of the Fee(s) Transmittal. This certificate cannot be used for any other accompanying papers. Each additional paper, such as an assignment or formal drawing, must have its own certificate of mailing or transmission.

Certificate of Mailing or Transmission

I hereby certify that this Fee(s) Transmittal is being deposited with the United States Postal Service with sufficient postage for first class mail in an envelope addressed to the Mail Stop ISSUE FEE address above, or being transmitted to the USPTO via EFS-Web or by facsimile to (571) 273-2885, on the date below.

(Typed or printed name)

(Signature)

(Date)

APPLICATION NO.	FILING DATE	FIRST NAMED INVENTOR	ATTORNEY DOCKET NO.	CONFIRMATION NO.
17/929,566	09/02/2022	VINCENT PILON	G13569-00523-HM	3654

TITLE OF INVENTION: MODULAR FIBRE OPTIC CASSETTE, SYSTEM AND METHOD

APPLN. TYPE	ENTITY STATUS	ISSUE FEE DUE	PUBLICATION FEE DUE	PREV. PAID ISSUE FEE	TOTAL FEE(S) DUE	DATE DUE
nonprovisional	UNDISCOUNTED	$1200	$0.00	$0.00	$1200	06/08/2023

EXAMINER	ART UNIT	CLASS-SUBCLASS
PEACE, RHONDA S	2874	385-135000

1. Change of correspondence address or indication of "Fee Address" (37 CFR 1.363).

❑ Change of correspondence address (or Change of Correspondence Address form PTO/AIA/122 or PTO/SB/122) attached.

❑ "Fee Address" indication (or "Fee Address" Indication form PTO/AIA/47 or PTO/SB/47; Rev 03-02 or more recent) attached. **Use of a Customer Number is required.**

2. For printing on the patent front page, list
(1) The names of up to 3 registered patent attorneys or agents OR, alternatively,
(2) The name of a single firm (having as a member a registered attorney or agent) and the names of up to 2 registered patent attorneys or agents. If no name is listed, no name will be printed.

1_____
2_____
3_____

3. ASSIGNEE NAME AND RESIDENCE DATA TO BE PRINTED ON THE PATENT (print or type)

PLEASE NOTE: Unless an assignee is identified below, no assignee data will appear on the patent. If an assignee is identified below, the document must have been previously recorded, or filed for recordation, as set forth in 37 CFR 3.11 and 37 CFR 3.81(a). Completion of this form is NOT a substitute for filing an assignment.

(A) NAME OF ASSIGNEE

(B) RESIDENCE: (CITY and STATE OR COUNTRY)

Please check the appropriate assignee category or categories (will not be printed on the patent) : ❑ Individual ❑ Corporation or other private group entity ❑ Government

4a. Fees submitted: ❑Issue Fee ❑Publication Fee (if required) ❑Advance Order - # of Copies _____

4b. Method of Payment: *(Please first reapply any previously paid fee shown above)*

❑ Electronic Payment via EFS-Web ❑ Enclosed check ❑ Non-electronic payment by credit card (Attach form PTO-2038)

❑ The Director is hereby authorized to charge the required fee(s), any deficiency, or credit any overpayment to Deposit Account No. _____

5. **Change in Entity Status** (from status indicated above)

❑ Applicant certifying micro entity status. See 37 CFR 1.29

❑ Applicant asserting small entity status. See 37 CFR 1.27

❑ Applicant changing to regular undiscounted fee status.

NOTE: Absent a valid certification of Micro Entity Status (see forms PTO/SB/15A and 15B), issue fee payment in the micro entity amount will not be accepted at the risk of application abandonment.
NOTE: If the application was previously under micro entity status, checking this box will be taken to be a notification of loss of entitlement to micro entity status.
NOTE: Checking this box will be taken to be a notification of loss of entitlement to small or micro entity status, as applicable.

NOTE: This form must be signed in accordance with 37 CFR 1.31 and 1.33. See 37 CFR 1.4 for signature requirements and certifications.

Authorized Signature _____ Date _____

Typed or printed name _____ Registration No. _____

UNITED STATES PATENT AND TRADEMARK OFFICE

UNITED STATES DEPARTMENT OF COMMERCE
United States Patent and Trademark Office
Address: COMMISSIONER FOR PATENTS
P.O. Box 1450
Alexandria, Virginia 22313-1450
www.uspto.gov

APPLICATION NO.	FILING DATE	FIRST NAMED INVENTOR	ATTORNEY DOCKET NO.	CONFIRMATION NO.
17/929,566	09/02/2022	VINCENT PILON	G13569-00523-HM	3654

25545 7590 03/08/2023
Lavery, De Billy, LLP
1 Place Ville Marie, Suite 4000
Montreal, QUEBEC H3B 4M4
CANADA

EXAMINER
PEACE, RHONDA S

ART UNIT	PAPER NUMBER
2874	

DATE MAILED: 03/08/2023

Determination of Patent Term Adjustment under 35 U.S.C. 154 (b)
(Applications filed on or after May 29, 2000)

The Office has discontinued providing a Patent Term Adjustment (PTA) calculation with the Notice of Allowance.

Section 1(h)(2) of the AIA Technical Corrections Act amended 35 U.S.C. 154(b)(3)(B)(i) to eliminate the requirement that the Office provide a patent term adjustment determination with the notice of allowance. See Revisions to Patent Term Adjustment, 78 Fed. Reg. 19416, 19417 (Apr. 1, 2013). Therefore, the Office is no longer providing an initial patent term adjustment determination with the notice of allowance. The Office will continue to provide a patent term adjustment determination with the Issue Notification Letter that is mailed to applicant approximately three weeks prior to the issue date of the patent, and will include the patent term adjustment on the patent. Any request for reconsideration of the patent term adjustment determination (or reinstatement of patent term adjustment) should follow the process outlined in 37 CFR 1.705.

Any questions regarding the Patent Term Extension or Adjustment determination should be directed to the Office of Patent Legal Administration at (571)-272-7702. Questions relating to issue and publication fee payments should be directed to the Customer Service Center of the Office of Patent Publication at 1-(888)-786-0101 or (571)-272-4200.

PTOL-85 (Rev. 02/11)

OMB Clearance and PRA Burden Statement for PTOL-85 Part B

The Paperwork Reduction Act (PRA) of 1995 requires Federal agencies to obtain Office of Management and Budget approval before requesting most types of information from the public. When OMB approves an agency request to collect information from the public, OMB (i) provides a valid OMB Control Number and expiration date for the agency to display on the instrument that will be used to collect the information and (ii) requires the agency to inform the public about the OMB Control Number's legal significance in accordance with 5 CFR 1320.5(b).

The information collected by PTOL-85 Part B is required by 37 CFR 1.311. The information is required to obtain or retain a benefit by the public which is to file (and by the USPTO to process) an application. Confidentiality is governed by 35 U.S.C. 122 and 37 CFR 1.14. This collection is estimated to take 30 minutes to complete, including gathering, preparing, and submitting the completed application form to the USPTO. Time will vary depending upon the individual case. Any comments on the amount of time you require to complete this form and/or suggestions for reducing this burden, should be sent to the Chief Information Officer, U.S. Patent and Trademark Office, U.S. Department of Commerce, P.O. Box 1450, Alexandria, Virginia 22313-1450. DO NOT SEND FEES OR COMPLETED FORMS TO THIS ADDRESS. SEND TO: Commissioner for Patents, P.O. Box 1450, Alexandria, Virginia 22313-1450. Under the Paperwork Reduction Act of 1995, no persons are required to respond to a collection of information unless it displays a valid OMB control number.

Privacy Act Statement

The Privacy Act of 1974 (P.L. 93-579) requires that you be given certain information in connection with your submission of the attached form related to a patent application or patent. Accordingly, pursuant to the requirements of the Act, please be advised that: (1) the general authority for the collection of this information is 35 U.S.C. 2(b)(2); (2) furnishing of the information solicited is voluntary; and (3) the principal purpose for which the information is used by the U.S. Patent and Trademark Office is to process and/or examine your submission related to a patent application or patent. If you do not furnish the requested information, the U.S. Patent and Trademark Office may not be able to process and/or examine your submission, which may result in termination of proceedings or abandonment of the application or expiration of the patent.

The information provided by you in this form will be subject to the following routine uses:

1. The information on this form will be treated confidentially to the extent allowed under the Freedom of Information Act (5 U.S.C. 552) and the Privacy Act (5 U.S.C 552a). Records from this system of records may be disclosed to the Department of Justice to determine whether disclosure of these records is required by the Freedom of Information Act.
2. A record from this system of records may be disclosed, as a routine use, in the course of presenting evidence to a court, magistrate, or administrative tribunal, including disclosures to opposing counsel in the course of settlement negotiations.
3. A record in this system of records may be disclosed, as a routine use, to a Member of Congress submitting a request involving an individual, to whom the record pertains, when the individual has requested assistance from the Member with respect to the subject matter of the record.
4. A record in this system of records may be disclosed, as a routine use, to a contractor of the Agency having need for the information in order to perform a contract. Recipients of information shall be required to comply with the requirements of the Privacy Act of 1974, as amended, pursuant to 5 U.S.C. 552a(m).
5. A record related to an International Application filed under the Patent Cooperation Treaty in this system of records may be disclosed, as a routine use, to the International Bureau of the World Intellectual Property Organization, pursuant to the Patent Cooperation Treaty.
6. A record in this system of records may be disclosed, as a routine use, to another federal agency for purposes of National Security review (35 U.S.C. 181) and for review pursuant to the Atomic Energy Act (42 U.S.C. 218(c)).
7. A record from this system of records may be disclosed, as a routine use, to the Administrator, General Services, or his/her designee, during an inspection of records conducted by GSA as part of that agency's responsibility to recommend improvements in records management practices and programs, under authority of 44 U.S.C. 2904 and 2906. Such disclosure shall be made in accordance with the GSA regulations governing inspection of records for this purpose, and any other relevant (i.e., GSA or Commerce) directive. Such disclosure shall not be used to make determinations about individuals.
8. A record from this system of records may be disclosed, as a routine use, to the public after either publication of the application pursuant to 35 U.S.C. 122(b) or issuance of a patent pursuant to 35 U.S.C. 151. Further, a record may be disclosed, subject to the limitations of 37 CFR 1.14, as a routine use, to the public if the record was filed in an application which became abandoned or in which the proceedings were terminated and which application is referenced by either a published application, an application open to public inspection or an issued patent.
9. A record from this system of records may be disclosed, as a routine use, to a Federal, State, or local law enforcement agency, if the USPTO becomes aware of a violation or potential violation of law or regulation.

Notice of Allowability	Application No. 17/929,566	Applicant(s) PILON, VINCENT	
	Examiner R. PEACE	Art Unit 2874	AIA (FITF) Status Yes

-- The MAILING DATE of this communication appears on the cover sheet with the correspondence address--

All claims being allowable, PROSECUTION ON THE MERITS IS (OR REMAINS) CLOSED in this application. If not included herewith (or previously mailed), a Notice of Allowance (PTOL-85) or other appropriate communication will be mailed in due course. **THIS NOTICE OF ALLOWABILITY IS NOT A GRANT OF PATENT RIGHTS.** This application is subject to withdrawal from issue at the initiative of the Office or upon petition by the applicant. See 37 CFR 1.313 and MPEP 1308.

1. ☑ This communication is responsive to the application filed 9/2/22.
   ☐ A declaration(s)/affidavit(s) under **37 CFR 1.130(b)** was/were filed on _____.

2. ☐ An election was made by the applicant in response to a restriction requirement set forth during the interview on _____; the restriction requirement and election have been incorporated into this action.

3. ☑ The allowed claim(s) is/are 1-65 . As a result of the allowed claim(s), you may be eligible to benefit from the **Patent Prosecution Highway** program at a participating intellectual property office for the corresponding application. For more information, please see **http://www.uspto.gov/patents/init_events/pph/index.jsp** or send an inquiry to **PPHfeedback@uspto.gov.**

4. ☐ Acknowledgment is made of a claim for foreign priority under 35 U.S.C. § 119(a)-(d) or (f).

   Certified copies:

   a) ☐ All b) ☐ Some* c) ☐ None of the:

   1. ☐ Certified copies of the priority documents have been received.
   2. ☐ Certified copies of the priority documents have been received in Application No. _____ .
   3. ☐ Copies of the certified copies of the priority documents have been received in this national stage application from the International Bureau (PCT Rule 17.2(a)).

   * Certified copies not received: _____ .

Applicant has THREE MONTHS FROM THE "MAILING DATE" of this communication to file a reply complying with the requirements noted below. Failure to timely comply will result in ABANDONMENT of this application.
THIS THREE-MONTH PERIOD IS NOT EXTENDABLE.

5. ☐ CORRECTED DRAWINGS (as "replacement sheets") must be submitted.
   ☐ including changes required by the attached Examiner's Amendment / Comment or in the Office action of Paper No./Mail Date _____ .

   Identifying indicia such as the application number (see 37 CFR 1.84(c)) should be written on the drawings in the front (not the back) of each sheet. Replacement sheet(s) should be labeled as such in the header according to 37 CFR 1.121(d).

6. ☐ DEPOSIT OF and/or INFORMATION about the deposit of BIOLOGICAL MATERIAL must be submitted. Note the attached Examiner's comment regarding REQUIREMENT FOR THE DEPOSIT OF BIOLOGICAL MATERIAL.

Attachment(s)

1. ☑ Notice of References Cited (PTO-892)
2. ☑ Information Disclosure Statements (PTO/SB/08), Paper No./Mail Date 9/2/22.
3. ☐ Examiner's Comment Regarding Requirement for Deposit of Biological Material _____.
4. ☐ Interview Summary (PTO-413), Paper No./Mail Date. _____.
5. ☐ Examiner's Amendment/Comment
6. ☑ Examiner's Statement of Reasons for Allowance
7. ☐ Other _____.

/RHONDA S PEACE/
Primary Examiner, Art Unit 2874

DETAILED ACTION

Notice of Pre-AIA or AIA Status

The present application, filed on or after March 16, 2013, is being examined under the first inventor to file provisions of the AIA.

Information Disclosure Statement

The information disclosure statement (IDS) submitted on 9/2/22 was filed in compliance with the provisions of 37 CFR 1.97. Accordingly, the information disclosure statement is being considered by the examiner.

Allowable Subject Matter

Claims 1-65 are allowed.

The following is an examiner's statement of reasons for allowance:

Re. Claims 1-17, the prior art does not disclose or reasonably suggest a fiber optic cassette tray for providing a plurality of different modular fiber optic cassette configurations in a fiber optic management system comprising: a tray having a front tray end portion and configured to be slidingly received in at least a portion of the tray receiving space of a housing of a fiber optic management system; wherein the tray is configured to support a plurality of different modular fiber optic cassette configurations when the tray is slidingly received in at least the portion of the tray receiving space; *wherein the plurality of different modular fiber optic cassette configurations include a selected plurality of fiber optic cassettes that are each configured to be arranged side by side along the front tray end portion of the tray such that an outer side edge of each of*

the selected plurality of fiber optic cassettes is directly adjacent to an outer edge of at least one other fiber optic cassette; wherein each of the selected plurality of fiber optic cassettes include a plurality of fiber optic plug receiving receptacle portions; wherein the tray is configured to be removably secured to each of the selected plurality of fiber optic cassettes when each of the plurality of fiber optic plug receiving receptacle portions are arranged side by side in a row along the front tray end portion; *wherein a first of the selected plurality of fiber optic cassettes comprises a first cassette width, as measured between outer side edges thereof, of two, three, four, or six standard width units; wherein a second of the selected plurality of fiber optic cassettes comprises a second cassette width, as measured between outer side edges thereof, of two, three, four, or six standard width units; and wherein the second cassette width is different from the first cassette width.*

The most applicable prior art, Sedor et al. (US 10,215,944 B2), see the IDS filed 9/2/22, fails to disclose or reasonably suggest the claimed invention, specifically those portions *highlighted* above in combination with the remaining limitations of the claims. When measuring widths from the outer side edges of the cassettes, Sedor et al. fails to disclose or reasonably suggest cassettes having the sizes requires by the claim.

Re. Claims 18-39, the prior art does not disclose or reasonably suggest a fiber optic cassette tray for providing a plurality of different modular fiber optic cassette configurations in a fiber optic management system comprising: a tray having a cassette engaging portion and configured to be slidingly received in at least a portion of the tray receiving space of a housing of a fiber optic management system; wherein the tray is configured to support a plurality of different modular fiber optic cassette configurations

when the tray is slidingly received in at least the portion of the tray receiving space; wherein the plurality of different modular fiber optic cassette configurations includes a selected plurality of fiber optic cassettes that are each configured to be arranged side by side along the cassette engaging portion of the tray such that an outer side edge of each of the selected plurality of fiber optic cassettes adjacently faces an outer edge of at least one other fiber optic cassette; wherein each of the selected plurality of fiber optic cassettes include a plurality of fiber optic plug receiving receptacle portions; wherein the tray is configured to be removably secured to each of the selected plurality of fiber optic cassettes when each of the plurality of fiber optic plug receiving receptacle portions are arranged side by side in a row; *wherein a first of the selected plurality of fiber optic cassettes comprises a first cassette width, as measured between outer side edges thereof, of two, three, four, and six standard width units; wherein a second of the selected plurality of fiber optic cassettes comprises a second cassette width, as measured between outer side edges thereof, of two, three, four, and six standard width units; and wherein the second cassette width is different from the first cassette width*.

The most applicable prior art, Sedor et al. (US 10,215,944 B2), see the IDS filed 9/2/22, fails to disclose or reasonably suggest the claimed invention, specifically those portions *highlighted* above in combination with the remaining limitations of the claims. When measuring widths from the outer side edges of the cassettes, Sedor et al. fails to disclose or reasonably suggest cassettes having the sizes requires by the claim.

Re. Claims 40-65, the prior art does not disclose or reasonably suggest a tray for providing a plurality of different modular fiber optic cassette configurations in a fiber optic management system comprising: a tray configured to fit a plurality of different

modular fiber optic cassette configurations in a case of a fiber management system; wherein the plurality of different modular fiber optic cassette configurations includes a selected plurality of fiber optic cassettes that are each configured to be arranged side by side along the tray such that an outer side edge of each of the selected plurality of fiber optic cassettes adjacently faces an outer edge of at least one other fiber optic cassette; wherein each of the selected plurality of fiber optic cassettes includes a plurality of fiber optic plug receiving receptacle portions; wherein the tray is configured to be removably secured to each of the selected plurality of fiber optic cassettes that are each configured to be arranged side by side along the tray; *wherein a first of the selected plurality of fiber optic cassettes comprises a first cassette width, as measured between outer side edges thereof, of two, three, four, and six standard width units; wherein a second of the selected plurality of fiber optic cassettes comprises a second cassette width, as measured between outer side edges thereof, of two, three, four, and six standard width units; and wherein the second cassette width is different from the first cassette width.*

The most applicable prior art, Sedor et al. (US 10,215,944 B2), see the IDS filed 9/2/22, fails to disclose or reasonably suggest the claimed invention, specifically those portions *highlighted* above in combination with the remaining limitations of the claims. When measuring widths from the outer side edges of the cassettes, Sedor et al. fails to disclose or reasonably suggest cassettes having the sizes requires by the claim.

Any comments considered necessary by applicant must be submitted no later than the payment of the issue fee and, to avoid processing delays, should preferably accompany the issue fee. Such submissions should be clearly labeled “Comments on Statement of Reasons for Allowance.”

Conclusion

The prior art made of record and not relied upon is considered pertinent to applicant's disclosure. See the attached PTO-892.

Any inquiry concerning this communication or earlier communications from the examiner should be directed to R. PEACE whose telephone number is (571)272-8580. The examiner can normally be reached 9-5 pm.

Examiner interviews are available via telephone, in-person, and video conferencing using a USPTO supplied web-based collaboration tool. To schedule an interview, applicant is encouraged to use the USPTO Automated Interview Request (AIR) at http://www.uspto.gov/interviewpractice.

If attempts to reach the examiner by telephone are unsuccessful, the examiner's supervisor, Uyen-Chau Le can be reached on (571) 272-2397. The fax phone number for the organization where this application or proceeding is assigned is 571-273-8300.

Information regarding the status of published or unpublished applications may be obtained from Patent Center. Unpublished application information in Patent Center is available to registered users. To file and manage patent submissions in Patent Center, visit: https://patentcenter.uspto.gov. Visit https://www.uspto.gov/patents/apply/patent-center for more information about Patent Center and https://www.uspto.gov/patents/docx for information about filing in DOCX format. For additional questions, contact the Electronic Business Center (EBC) at 866-217-9197 (toll-free). If you would like assistance from a USPTO Customer Service Representative, call 800-786-9199 (IN USA OR CANADA) or 571-272-1000.

/RHONDA S PEACE/
Primary Examiner, Art Unit 2874
3/2/23

Notice of References Cited	Application/Control No. 17/929,566	Applicant(s)/Patent Under Reexamination PILON, VINCENT	
	Examiner R. PEACE	Art Unit 2874	Page 1 of 1

U.S. PATENT DOCUMENTS

*		Document Number Country Code-Number-Kind Code	Date MM-YYYY	Name	CPC Classification	US Classification
*	A	US-9690064-B2	06-2017	Sauter; Tom	G02B6/4452	1/1
*	B	US-20160062055-A1	03-2016	Giraud; William Julius McPhil	G02B6/4453	385/56
	C					
	D					
	E					
	F					
	G					
	H					
	I					
	J					
	K					
	L					
	M					

FOREIGN PATENT DOCUMENTS

*		Document Number Country Code-Number-Kind Code	Date MM-YYYY	Country	Name	CPC Classification
	N					
	O					
	P					
	Q					
	R					
	S					
	T					

NON-PATENT DOCUMENTS

*		Include as applicable: Author, Title Date, Publisher, Edition or Volume, Pertinent Pages)
	U	
	V	
	W	
	X	

*A copy of this reference is not being furnished with this Office action. (See MPEP § 707.05(a).)
Dates in MM-YYYY format are publication dates. Classifications may be US or foreign.

Search Notes	Application/Control No.	Applicant(s)/Patent Under Reexamination
	17/929,566	PILON, VINCENT
	Examiner	**Art Unit**
	R. PEACE	2874

CPC - Searched*		
Symbol	**Date**	**Examiner**
G02B 6/4453-4455 (with text limiting)	03/02/2023	RSP

CPC Combination Sets - Searched*		
Symbol	**Date**	**Examiner**

US Classification - Searched*			
Class	**Subclass**	**Date**	**Examiner**

* See search history printout included with this form or the SEARCH NOTES box below to determine the scope of the search.

Search Notes		
Search Notes	**Date**	**Examiner**
inventor search	03/02/2023	RSP
global dossier search	03/02/2023	RSP
see attached SEARCH history notes	03/02/2023	RSP

Interference Search			
US Class/CPC Symbol	**US Subclass/CPC Group**	**Date**	**Examiner**
	interference search (USPAT and USPGPub databases)	03/02/2023	RSP

/RHONDA S PEACE/ Primary Examiner, Art Unit 2874	

Issue Classification	Application/Control No.	Applicant(s)/Patent Under Reexamination
	17/929,566	PILON, VINCENT
	Examiner	**Art Unit**
	R. PEACE	2874

CPC						
Symbol					**Type**	**Version**
G02B	/	6	/	4455	F	2013-01-01
G02B	/	6	/	46	I	2013-01-01

CPC Combination Sets								
Symbol					**Type**	**Set**	**Ranking**	**Version**
	/		/					

NONE (Assistant Examiner)	(Date)	**Total Claims Allowed:** 65	
/RHONDA S PEACE/ Primary Examiner, Art Unit 2874 (Primary Examiner)	02 March 2023 (Date)	O.G. Print Claim(s) 1	O.G. Print Figure 3

U.S. Patent and Trademark Office

Part of Paper No.: 20230302

Issue Classification	Application/Control No.	Applicant(s)/Patent Under Reexamination
	17/929,566	PILON, VINCENT
	Examiner	**Art Unit**
	R. PEACE	2874

INTERNATIONAL CLASSIFICATION				
CLAIMED				
G02B6/44	/	6	/	44

NON-CLAIMED				
G02B6/46	/	6	/	46

US ORIGINAL CLASSIFICATION	
CLASS	**SUBCLASS**

CROSS REFERENCES(S)						
CLASS	**SUBCLASS (ONE SUBCLASS PER BLOCK)**					

NONE (Assistant Examiner)	(Date)	**Total Claims Allowed:** 65	
/RHONDA S PEACE/ Primary Examiner, Art Unit 2874 (Primary Examiner)	02 March 2023 (Date)	O.G. Print Claim(s) 1	O.G. Print Figure 3

U.S. Patent and Trademark Office

Part of Paper No.: 20230302

Issue Classification	Application/Control No.	Applicant(s)/Patent Under Reexamination
	17/929,566	PILON, VINCENT
	Examiner	**Art Unit**
	R. PEACE	2874

☑ Claims renumbered in the same order as presented by applicant ☐ CPA ☐ T.D. ☐ R.1.47

CLAIMS

Final	Original	Final	Original	Final	Original	Final	Original	Final	Original	Final	Original	Final	Original	Final	Original
	1		10		19		28		37		46		55		64
	2		11		20		29		38		47		56		65
	3		12		21		30		39		48		57		
	4		13		22		31		40		49		58		
	5		14		23		32		41		50		59		
	6		15		24		33		42		51		60		
	7		16		25		34		43		52		61		
	8		17		26		35		44		53		62		
	9		18		27		36		45		54		63		

NONE (Assistant Examiner)	(Date)	**Total Claims Allowed:** 65	
/RHONDA S PEACE/ Primary Examiner, Art Unit 2874 (Primary Examiner)	02 March 2023 (Date)	O.G. Print Claim(s) 1	O.G. Print Figure 3

U.S. Patent and Trademark Office Part of Paper No.: 20230302

Bibliographic Data

Application No: 17/929,566

Foreign Priority claimed: ○ Yes ◉ No

35 USC 119 (a-d) conditions met: ☐ Yes ☑ No | ☐ Met After Allowance

Verified and Acknowledged: /RHONDA S PEACE/ | Examiner's Signature | Initials

Title: MODULAR FIBRE OPTIC CASSETTE, SYSTEM AND METHOD

FILING or 371(c) DATE	CLASS	GROUP ART UNIT	ATTORNEY DOCKET NO.
09/02/2022 **RULE**	385	2874	G13569-00523-HM

APPLICANTS

BELDEN CANADA ULC, SAINT-LAURENT, QC, CANADA

INVENTORS

VINCENT PILON,

CONTINUING DATA

This application is a CON of 17010113 09/02/2020 PAT 11435542

17010113 is a CON of 16143831 09/27/2018 PAT 10795107

16143831 has PRO of 62567339 10/03/2017

FOREIGN APPLICATIONS

IF REQUIRED, FOREIGN LICENSE GRANTED**

09/16/2022

STATE OR COUNTRY

ADDRESS

Lavery, De Billy, LLP
1 Place Ville Marie, Suite 4000
Montreal, QC H3B 4M4
CANADA

FILING FEE RECEIVED

$6,320

Doc code: IDS
Doc description: Information Disclosure Statement (IDS) Filed

PTO/SB/08a (01-22)
Approved for use through 05/31/2024. OMB 0651-0031
U.S. Patent and Trademark Office; U.S. DEPARTMENT OF COMMERCE
Under the Paperwork Reduction Act of 1995, no persons are required to respond to a collection of information unless it contains a valid OMB control number.

INFORMATION DISCLOSURE STATEMENT BY APPLICANT (Not for submission under 37 CFR 1.99)		
	Application Number	17/929,566 - GAU: 2874
	Filing Date	
	First Named Inventor	Vincent PILON
	Art Unit	
	Examiner Name	
	Attorney Docket Number	G13569-00523-HM

U.S.PATENTS						Remove
Examiner Initial*	Cite No	Patent Number	Kind Code[1]	Issue Date	Name of Patentee or Applicant of cited Document	Pages,Columns,Lines where Relevant Passages or Relevant Figures Appear
	1	4792203	A	1988-12-20	Nelson et al.	
	2	7331722	B2	2008-02-19	Tan	
	3	7509015	B2	2009-05-24	Murano	
	4	8913866	B2	2014-12-16	Cote et al.	
	5	9008485	B2	2015-04-14	Ramirez et al.	
	6	9075216	B2	2015-07-07	Cote et al.	
	7	10215944	B2	2019-02-26	Sedor et al.	
	8	10281672	B1	2019-05-07	Mullsteff	

ALL REFERENCES CONSIDERED EXCEPT WHERE LINED THROUGH. /R.S.P./

/RHONDA S PEACE/ 03/02/2023

INFORMATION DISCLOSURE STATEMENT BY APPLICANT (Not for submission under 37 CFR 1.99)		
	Application Number	17/929,566 - GAU: 2874
	Filing Date	
	First Named Inventor	Vincent PILON
	Art Unit	
	Examiner Name	
	Attorney Docket Number	G13569-00523-HM

	9	10359595	B2	2019-07-23	Aramayo et al.	
	10	10514518	B2	2019-12-24	Livingston et al.	
	11	10598884	B2	2020-03-24	Fontaine et al.	
	12	10656359	B2	2020-05-19	Fontaine et al.	
	13	10768387	B2	2020-09-08	Pilon et al.	
	14	10795107	B2	2020-10-06	Pilon	
	15	11187864	B2	2021-11-30	Crawford et al.	

If you wish to add additional U.S. Patent citation information please click the Add button. Add

U.S.PATENT APPLICATION PUBLICATIONS Remove

Examiner Initial*	Cite No	Publication Number	Kind Code[1]	Publication Date	Name of Patentee or Applicant of cited Document	Pages,Columns,Lines where Relevant Passages or Relevant Figures Appear
	1	20020131730	A1	2002-09-19	Keeble et al.	
	2	20070131628	A1	2007-06-14	Mimlitch	

ALL REFERENCES CONSIDERED EXCEPT WHERE LINED THROUGH. /R.S.P./

/RHONDA S PEACE/ 03/02/2023

INFORMATION DISCLOSURE STATEMENT BY APPLICANT (Not for submission under 37 CFR 1.99)		
	Application Number	17/929,566 - GAU: 2874
	Filing Date	
	First Named Inventor	Vincent PILON
	Art Unit	
	Examiner Name	
	Attorney Docket Number	G13569-00523-HM

	3	20090290842	A1	2009-11-26	Bran de Leon et al.	
	4	20160033732	A1	2016-02-04	Giraud et al.	
	5	20160062050	A1	2016-03-03	Giraud et al.	
	6	20160062068	A1		Giraud et al.	
	7	20190004268	A1	2019-01-03	Vogel	
	8	20190101717	A1	2019-04-04	Pilon	
	9	20190107682	A1	2019-04-11	Aramayo et al.	
	10	20190162924	A1	2019-05-30	Fontaine et al.	
	11	20190187394	A1	2019-06-20	Fontaine et al.	
	12	20200131730	A1	2020-04-30	Spiro	

If you wish to add additional U.S. Published Application citation information please click the Add button. Add

FOREIGN PATENT DOCUMENTS Remove

ALL REFERENCES CONSIDERED EXCEPT WHERE LINED THROUGH. /R.S.P./

EFS Web 2.1.18

/RHONDA S PEACE/ 03/02/2023

Receipt date: 09/02/2022

INFORMATION DISCLOSURE STATEMENT BY APPLICANT (Not for submission under 37 CFR 1.99)		
	Application Number	17/929,566 - GAU: 2874
	Filing Date	
	First Named Inventor	Vincent PILON
	Art Unit	
	Examiner Name	
	Attorney Docket Number	G13569-00523-HM

Examiner Initial*	Cite No	Foreign Document Number[3]	Country Code[2]	Kind Code[4]	Publication Date	Name of Patentee or Applicant of cited Document	Pages,Columns,Lines where Relevant Passages or Relevant Figures Appear	T[5]
	1							

If you wish to add additional Foreign Patent Document citation information please click the Add button Add

NON-PATENT LITERATURE DOCUMENTS Remove

Examiner Initials*	Cite No	Include name of the author (in CAPITAL LETTERS), title of the article (when appropriate), title of the item (book, magazine, journal, serial, symposium, catalog, etc), date, pages(s), volume-issue number(s), publisher, city and/or country where published.	T[5]
	1		

If you wish to add additional non-patent literature document citation information please click the Add button Add

EXAMINER SIGNATURE

Examiner Signature	/RHONDA S PEACE/	Date Considered	03/02/2023

*EXAMINER: Initial if reference considered, whether or not citation is in conformance with MPEP 609. Draw line through a citation if not in conformance and not considered. Include copy of this form with next communication to applicant.

[1] See Kind Codes of USPTO Patent Documents at www.USPTO.GOV or MPEP 901.04. [2] Enter office that issued the document, by the two-letter code (WIPO Standard ST.3). [3] For Japanese patent documents, the indication of the year of the reign of the Emperor must precede the serial number of the patent document. [4] Kind of document by the appropriate symbols as indicated on the document under WIPO Standard ST.16 if possible. [5] Applicant is to place a check mark here if English language translation is attached.

ALL REFERENCES CONSIDERED EXCEPT WHERE LINED THROUGH. /R.S.P./

EFS Web 2.1.18

Receipt date: 09/02/2022

INFORMATION DISCLOSURE STATEMENT BY APPLICANT (Not for submission under 37 CFR 1.99)	Application Number	17/929,566 - GAU: 2874
	Filing Date	
	First Named Inventor	Vincent PILON
	Art Unit	
	Examiner Name	
	Attorney Docket Number	G13569-00523-HM

CERTIFICATION STATEMENT

Please see 37 CFR 1.97 and 1.98 to make the appropriate selection(s):

That each item of information contained in the information disclosure statement was first cited in any communication from a foreign patent office in a counterpart foreign application not more than three months prior to the filing of the information disclosure statement. See 37 CFR 1.97(e)(1).

OR

☐ That no item of information contained in the information disclosure statement was cited in a communication from a foreign patent office in a counterpart foreign application, and, to the knowledge of the person signing the certification after making reasonable inquiry, no item of information contained in the information disclosure statement was known to any individual designated in 37 CFR 1.56(c) more than three months prior to the filing of the information disclosure statement. See 37 CFR 1.97(e)(2).

See attached certification statement.

The fee set forth in 37 CFR 1.17 (p) has been submitted herewith.

☒ A certification statement is not submitted herewith.

SIGNATURE

A signature of the applicant or representative is required in accordance with CFR 1.33, 10.18. Please see CFR 1.4(d) for the form of the signature.

Signature	/Hugh Mansfield/	Date (YYYY-MM-DD)	2022-09-02
Name/Print	Hugh Mansfield	Registration Number	55757

This collection of information is required by 37 CFR 1.97 and 1.98. The information is required to obtain or retain a benefit by the public which is to file (and by the USPTO to process) an application. Confidentiality is governed by 35 U.S.C. 122 and 37 CFR 1.14. This collection is estimated to take 1 hour to complete, including gathering, preparing and submitting the completed application form to the USPTO. Time will vary depending upon the individual case. Any comments on the amount of time you require to complete this form and/or suggestions for reducing this burden, should be sent to the Chief Information Officer, U.S. Patent and Trademark Office, U.S. Department of Commerce, P.O. Box 1450, Alexandria, VA 22313-1450. DO NOT SEND FEES OR COMPLETED FORMS TO THIS ADDRESS. **SEND TO: Commissioner for Patents, P.O. Box 1450, Alexandria, VA 22313-1450.**

EFS Web 2.1.18

Privacy Act Statement

The Privacy Act of 1974 (P.L. 93-579) requires that you be given certain information in connection with your submission of the attached form related to a patent application or patent. Accordingly, pursuant to the requirements of the Act, please be advised that: (1) the general authority for the collection of this information is 35 U.S.C. 2(b)(2); (2) furnishing of the information solicited is voluntary; and (3) the principal purpose for which the information is used by the U.S. Patent and Trademark Office is to process and/or examine your submission related to a patent application or patent. If you do not furnish the requested information, the U.S. Patent and Trademark Office may not be able to process and/or examine your submission, which may result in termination of proceedings or abandonment of the application or expiration of the patent.

The information provided by you in this form will be subject to the following routine uses:

1. The information on this form will be treated confidentially to the extent allowed under the Freedom of Information Act (5 U.S.C. 552) and the Privacy Act (5 U.S.C. 552a). Records from this system of records may be disclosed to the Department of Justice to determine whether the Freedom of Information Act requires disclosure of these record s.

2. A record from this system of records may be disclosed, as a routine use, in the course of presenting evidence to a court, magistrate, or administrative tribunal, including disclosures to opposing counsel in the course of settlement negotiations.

3. A record in this system of records may be disclosed, as a routine use, to a Member of Congress submitting a request involving an individual, to whom the record pertains, when the individual has requested assistance from the Member with respect to the subject matter of the record.

4. A record in this system of records may be disclosed, as a routine use, to a contractor of the Agency having need for the information in order to perform a contract. Recipients of information shall be required to comply with the requirements of the Privacy Act of 1974, as amended, pursuant to 5 U.S.C. 552a(m).

5. A record related to an International Application filed under the Patent Cooperation Treaty in this system of records may be disclosed, as a routine use, to the International Bureau of the World Intellectual Property Organization, pursuant to the Patent Cooperation Treaty.

6. A record in this system of records may be disclosed, as a routine use, to another federal agency for purposes of National Security review (35 U.S.C. 181) and for review pursuant to the Atomic Energy Act (42 U.S.C. 218(c)).

7. A record from this system of records may be disclosed, as a routine use, to the Administrator, General Services, or his/her designee, during an inspection of records conducted by GSA as part of that agency's responsibility to recommend improvements in records management practices and programs, under authority of 44 U.S.C. 2904 and 2906. Such disclosure shall be made in accordance with the GSA regulations governing inspection of records for this purpose, and any other relevant (i.e., GSA or Commerce) directive. Such disclosure shall not be used to make determinations about individuals.

8. A record from this system of records may be disclosed, as a routine use, to the public after either publication of the application pursuant to 35 U.S.C. 122(b) or issuance of a patent pursuant to 35 U.S.C. 151. Further, a record may be disclosed, subject to the limitations of 37 CFR 1.14, as a routine use, to the public if the record was filed in an application which became abandoned or in which the proceedings were terminated and which application is referenced by either a published application, an application open to public inspections or an issued patent.

9. A record from this system of records may be disclosed, as a routine use, to a Federal, State, or local law enforcement agency, if the USPTO becomes aware of a violation or potential violation of law or regulation.

Application
US 17929566
US 16143831
US 17010113

PE2E SEARCH - Search History (Prior Art)

Ref #	Hits	Search Query	DBs	Default Operator	Plurals	British Equivalents	Time Stamp
L1	218	G02B6/4455.cpc. and modular	(US-PGPUB; USPAT; USOCR; FPRS; EPO; JPO; DERWENT; IBM_TDB)	OR	ON	ON	2019/04/23 06:55 PM
L2	44	((("BELDEN") near3 ("CANADA") near3 ("INC"))).AS,AANM.	(USPAT)	OR	ON	ON	2019/04/23 07:12 PM
L3	15	((("PILON") near3 ("VINCENT"))).INV.	(US-PGPUB; USPAT; USOCR; EPO; JPO; DERWENT)	OR	ON	ON	2019/04/23 07:13 PM
L4	2814	G02B6/4455.cpc. not L1	(US-PGPUB; USPAT; USOCR; FPRS; EPO; JPO; DERWENT; IBM_TDB)	OR	ON	ON	2019/04/23 07:55 PM
L5	25	L4 and magnet$4	(US-PGPUB; USPAT; USOCR; FPRS; EPO; JPO; DERWENT; IBM_TDB)	OR	ON	ON	2019/04/23 07:57 PM
L6	2789	L4 not L5	(US-PGPUB; USPAT; USOCR; FPRS; EPO; JPO; DERWENT; IBM_TDB)	OR	ON	ON	2019/04/23 08:02 PM
L7	194	("20060018622" | "20080089656" | "20080175552" | "20090245743" | "20100051886" | "20100052346" | "20100054684" | "20100296791" | "20100310225" | "20100316334" | "20100322580" | "20100322581" | "20100322582" | "20100322583" | "20110268405" | "20110268406" | "20110268408" | "20110268410" | "20110268411" | "20110274402" | "20120114295" | "20130011105" | "20130028567" | "20130121657" | "20130148935" | "20130214662" | "20130251319" | "20130251326" | "20130287357" |	(US-PGPUB; USPAT; USOCR)	OR	ON	ON	2019/04/24 09:32 AM

		"20140010511" | "20140079365" | "20160033732" | "20160062050" | "20160062055" | "20160062058" | "20160062068" | "20160299308" | "2056219" | "2550339" | "3392543" | "3478535" | "4034572" | "4266853" | "4585303" | "4655521" | "4792203" | "4824196" | "4846565" | "4986762" | "5046811" | "5129030" | "5142606" | "5167001" | "5212761" | "5325455" | "5339379" | "5370541" | "5442726" | "5448670" | "5490229" | "5497444" | "5511144" | "5647043" | "5717810" | "5758003" | "5804765" | "5836786" | "5902155" | "5946440" | "5978540" | "6017238" | "6080011" | "6085003" | "6086415" | "6095852" | "6109978" | "6167183" | "6203130" | "6210216" | "6356697" | "6396992" | "6591051" | "6768860" | "6769551" | "6771861" | "6788846" | "6920274" | "6944389" | "6946600" | "6974438" | "7000784" | "7031588" | "7087840" | "7113687" | "7147383" | "7200314" | "7200316" | "7318321" | "7320507" | "7330629" | "7376321" | "7416347" | "7418182" | "7509015" | "7529458" | "7532799" | "7570861" | "7628644" | "7672561" | "7681187" | "7682187" | "7686518").PN. OR ("7689089" | "7722411" | "7729586" | "7744176" | "7756378" | "7756380" | "7760983" | "7826705" | "7854333" | "7856166" | "7876995" | "7887244" | "7889961" | "7903925" | "7945135" | "7945136" | "7962000" | "7974105" | "7979985" | "8014646" | "8038015" | "8038354" | "8061534" | "8075198"					

		| "8075344" | "8121458" | "8135257" | "8154886" | "8179684" | "8184938" | "8203450" | "8254742" | "8280216" | "8285104" | "8290332" | "8290333" | "8297854" | "8301004" | "8326107" | "8331752" | "8403599" | "8411465" | "8418974" | "8433171" | "8437147" | "8437597" | "8452148" | "8452149" | "8472776" | "8520996" | "8538226" | "8559783" | "8565572" | "8625950" | "8625951" | "8705926" | "8712206" | "8746466" | "8867883" | "8879881" | "8934253" | "8938147" | "8953924" | "8965168" | "8992099" | "9008485" | "9020320" | "9075216" | "9075217" | "9116324" | "9140870" | "9170392" | "9213161" | "9213363" | "9279951" | "9690065" | "D628462" | "RE40375").PN. OR ("10215944").URPN.					
L8	4	G02B6/44$.cpc. and (magnet$4 near5 rail)	(US-PGPUB; USPAT; USOCR; FPRS; EPO; JPO; DERWENT; IBM_TDB)	OR	ON	ON	2019/04/24 11:17 AM
L9	12	G02B6/44$.cpc. and (magnet$4 near5 tray)	(US-PGPUB; USPAT; USOCR; FPRS; EPO; JPO; DERWENT; IBM_TDB)	OR	ON	ON	2019/04/24 11:18 AM
L10	17	G02B6/$.cpc. and ((standard adj width) same (module or cassette))	(US-PGPUB; USPAT; USOCR; FPRS; EPO; JPO; DERWENT; IBM_TDB)	OR	ON	ON	2019/08/07 01:36 PM
L11	18	(US-20160062050-$ or US-20160062055-$ or US-20160062058-$ or US-20160062068-$ or US-20170192191-$ or US-20180003912-$ or US-20180100976-$ or US-20190004268-$ or US-20190101717-$ or US-20090290842-$ or US-20160033732-$).did. or (US-10215944-$ or US-10254497-$ or US-9841574-$ or US-	(US-PGPUB; USPAT; FPRS)	OR	ON	ON	2019/08/07 02:05 PM

		4792203-$ or US-8554044-$ or US-4840449-$).did. or (EP-3404461-$).did.					
L12	194	("20060018622" | "20080089656" | "20080175552" | "20090245743" | "20100051886" | "20100052346" | "20100054684" | "20100296791" | "20100310225" | "20100316334" | "20100322580" | "20100322581" | "20100322582" | "20100322583" | "20110268405" | "20110268406" | "20110268408" | "20110268410" | "20110268411" | "20110274402" | "20120114295" | "20130011105" | "20130028567" | "20130121657" | "20130148935" | "20130214662" | "20130251319" | "20130251326" | "20130287357" | "20140010511" | "20140079365" | "20160033732" | "20160062050" | "20160062055" | "20160062058" | "20160062068" | "20160299308" | "2056219" | "2550339" | "3392543" | "3478535" | "4034572" | "4266853" | "4585303" | "4655521" | "4792203" | "4824196" | "4846565" | "4986762" | "5046811" | "5129030" | "5142606" | "5167001" | "5212761" | "5325455" | "5339379" | "5370541" | "5442726" | "5448670" | "5490229" | "5497444" | "5511144" | "5647043" | "5717810" | "5758003" | "5804765" | "5836786" | "5902155" | "5946440" |	(US-PGPUB; USPAT; USOCR)	OR	ON	ON	2019/12/17 11:13 AM

		"5978540" | "6017238" | "6080011" | "6085003" | "6086415" | "6095852" | "6109978" | "6167183" | "6203130" | "6210216" | "6356697" | "6396992" | "6591051" | "6768860" | "6769551" | "6771861" | "6788846" | "6920274" | "6944389" | "6946600" | "6974438" | "7000784" | "7031588" | "7087840" | "7113687" | "7147383" | "7200314" | "7200316" | "7318321" | "7320507" | "7330629" | "7376321" | "7416347" | "7418182" | "7509015" | "7529458" | "7532799" | "7570861" | "7628644" | "7672561" | "7681187" | "7682187" | "7686518").PN. OR ("7689089" | "7722411" | "7729586" | "7744176" | "7756378" | "7756380" | "7760983" | "7826705" | "7854333" | "7856166" | "7876995" | "7887244" | "7889961" | "7903925" | "7945135" | "7945136" | "7962000" | "7974105" | "7979985" | "8014646" | "8038015" | "8038354" | "8061534" | "8075198" | "8075344" | "8121458" | "8135257" | "8154886" | "8179684" | "8184938" | "8203450" | "8254742" | "8280216" | "8285104" | "8290332" | "8290333" | "8297854" | "8301004" | "8326107" | "8331752" | "8403599" | "8411465" | "8418974" | "8433171" | "8437147" | "8437597" | "8452148" | "8452149" | "8472776" | "8520996" | "8538226" | "8559783" | "8565572" | "8625950" | "8625951" | "8705926" | "8712206" | "8746466" | "8867883" | "8879881" | "8934253" | "8938147" | "8953924" | "8965168" | "8992099" | "9008485" | "9020320" | "9075216" | "9075217" | "9116324" | "9140870" | "9170392"					

		| "9213161" | "9213363" | "9279951" | "9690065" | "D628462" | "RE40375").PN. OR ("10215944").URPN.					
L13	73	("8285104").URPN.	(USPAT)	OR	ON	ON	2019/12/17 11:24 AM
L14	1087	("0620013" | "20010010741" | "20010029125" | "20020010818" | "20020012353" | "20020014571" | "20020034290" | "20020037139" | "20020064364" | "20020131730" | "20020136519" | "20020141724" | "20020150372" | "20020172467" | "20020180163" | "20020181918" | "20020181922" | "20020191939" | "20020194596" | "20030002802" | "20030007743" | "20030007767" | "20030011855" | "20030021539" | "20030036748" | "20030051026" | "20030066998" | "20030086675" | "20030095753" | "20030147604" | "20030156552" | "20030174996" | "20030180004" | "20030180012" | "20030183413" | "20030199201" | "20030210882" | "20030223723" | "20030223725" | "20030235387" | "20040001717" | "20040013389" | "20040013390" | "20040022494" | "20040024934" | "20040067036" | "20040074852" | "20040086238" | "20040086252" | "20040120679" |	(US-PGPUB; USPAT; USOCR)	OR	ON	ON	2019/12/17 11:25 AM

		"20040147159" | "20040151465" | "20040175090" | "20040192115" | "20040196841" | "20040208459" | "20040228598" | "20040240827" | "20040240882" | "20040264873" | "20050002633" | "20050008131" | "20050026497" | "20050036749" | "20050067358" | "20050069248" | "20050074990" | "20050076149" | "20050083959" | "20050107086" | "20050111809" | "20050123261" | "20050129379" | "20050175293" | "20050178573" | "20050201073" | "20050232566" | "20050233647" | "20050254757" | "20050281526" | "20050281527" | "20050285493" | "20060007562" | "20060018448" | "20060018622" | "20060034048" | "20060039290" | "20060044774" | "20060045458" | "20060072606" | "20060077968" | "20060093303" | "20060103270" | "20060110118").PN. OR ("20060127026" | "20060133736" | "20060133759" | "20060147172" | "20060153517" | "20060160377" | "20060165365" | "20060165366" | "20060191700" | "20060193590" | "20060193591" | "20060198098" | "20060204179" | "20060215980"					

		"20060225912" | "20060228087" | "20060269194" | "20060269206" | "20060269208" | "20060275008" | "20060275009" | "20060285812" | "20070003204" | "20070025070" | "20070031099" | "20070033629" | "20070047894" | "20070058641" | "20070086723" | "20070104447" | "20070110373" | "20070127201" | "20070131628" | "20070183732" | "20070189692" | "20070196071" | "20070221793" | "20070237484" | "20070257159" | "20070266192" | "20070274718" | "20080011514" | "20080025683" | "20080031585" | "20080063350" | "20080068788" | "20080069511" | "20080069512" | "20080078899" | "20080080826" | "20080080827" | "20080080828" | "20080085094" | "20080089656" | "20080095502" | "20080095541" | "20080100440" | "20080106871" | "20080112681" | "20080118207" | "20080121423" | "20080124039" | "20080131068" | "20080145013" | "20080152294" | "20080166094" | "20080166131" | "20080175541" | "20080175550" | "20080175551" | "20080175552" | "20080193091"					

		"20080205823" | "20080205843" | "20080205844" | "20080212928" | "20080219632" | "20080219634" | "20080236858" | "20080247723" | "20080267573" | "20080285934" | "20080292261" | "20080296060" | "20080298763" | "20080304803" | "20080310810" | "20090010607" | "20090016685" | "20090022470" | "20090038845" | "20090060439" | "20090060440").PN. OR ("20090067800" | "20090074371" | "20090080849" | "20090097813" | "20090110347" | "20090121092" | "20090136194" | "20090136195" | "20090136196" | "20090146342" | "20090148117" | "20090166404" | "20090169163" | "20090175588" | "20090180749" | "20090184221" | "20090185782" | "20090191891" | "20090194647" | "20090196563" | "20090202214" | "20090207577" | "20090208178" | "20090208210" | "20090212679" | "20090214171" | "20090220200" | "20090220204" | "20090226142" | "20090238531" | "20090245743" | "20090252472" | "20090257726" | "20090257727" | "20090257754" | "20090263096" | "20090263122"					

		"20090267865" | "20090269016" | "20090269018" | "20090269019" | "20090274429" | "20090274430" | "20090274432" | "20090290842" | "20090290843" | "20090297111" | "20090304342" | "20090324189" | "20100003000" | "20100012671" | "20100027953" | "20100054681" | "20100054682" | "20100054683" | "20100054684" | "20100054685" | "20100054686" | "20100054687" | "20100061691" | "20100061693" | "20100074587" | "20100080517" | "20100086267" | "20100086274" | "20100111483" | "20100119201" | "20100129035" | "20100142544" | "20100142910" | "20100150518" | "20100158467" | "20100166377" | "20100178022" | "20100202740" | "20100202745" | "20100202748" | "20100220967" | "20100220968" | "20100247051" | "20100266245" | "20100278499" | "20100296790" | "20100296791" | "20100310225" | "20100310226" | "20100316334" | "20100322554" | "20100322579" | "20100322580" | "20100322581" | "20100322582" | "20100322583").PN. OR ("20100329624" | "20110008004"					

		"20110069931" | "20110073730" | "20110085774" | "20110085776" | "20110097053" | "20110097977" | "20110129185" | "20110129186" | "20110186532" | "20110192631" | "20110211799" | "20110217014" | "20110217016" | "20110222821" | "20110249950" | "20110268404" | "20110268405" | "20110268407" | "20110268408" | "20110268413" | "20110280537" | "20120025683" | "20120051707" | "20120057838" | "20120106899" | "20120183263" | "20120183289" | "20120219263" | "20120288244" | "20120288248" | "20120301083" | "20130004136" | "20130058616" | "20130077927" | "20130214108" | "20130266282" | "20130308916" | "20140003782" | "20140010510" | "20140112628" | "2528910" | "2614685" | "3081717" | "3175873" | "3212192" | "3433886" | "3494306" | "3545712" | "3568263" | "3646244" | "3664514" | "3683238" | "3701835" | "3880396" | "3906592" | "3991960" | "4047797" | "4059872" | "4119285" | "4148454" | "4239316" | "4244638" | "4285486" | "4303296" | "4354731" | "4457482" | "4525012" | "4540222" | "4561615" | "4564163" | "4597173" | "4611875" | "4635886" | "4645292" | "4657340" | "4681288" |					

		"4702551" | "4711518" | "4736100" | "4744629" | "4747020" | "4752110" | "4753510" | "4787706" | "4792203" | "4798432" | "4805979" | "4808774" | "4824193" | "4824196" | "4826277" | "4838643" | "4840449" | "4865280" | "4898448" | "4900123" | "4911662" | "4948220" | "4949376" | "4971421" | "4986625" | "4988831" | "4991928" | "4995688" | "5001602" | "5005941" | "5017211" | "5023646" | "5024498").PN. OR ("5028114" | "5037175" | "5048918" | "5060897" | "5066149" | "5067784" | "5071211" | "5071220" | "5073042" | "5074635" | "5076688" | "5080459" | "5100221" | "5104336" | "5125060" | "5127082" | "5127851" | "5129030" | "5129607" | "5133039" | "5138678" | "5138688" | "5142598" | "5142607" | "5150277" | "5152760" | "5153910" | "5157749" | "5167001" | "5170452" | "5189723" | "5199099" | "5204929" | "5209572" | "5214735" | "5224186" | "5230492" | "5231687" | "5231688" | "5233674" | "5239609" | "5243679" | "5253320" | "5260957" | "5261633" | "5265187" | "5274729" | "5274731" | "5278933" | "5280138" | "5285515" | "5291570" | "5315679" | "5317663" | "5323478" | "5323480" | "5329520" | "5333193" | "5333221" | "5333222" | "5337400" | "5339379" | "5347603" | "5353367" | "5359688" | "5363466" | "5363467" | "5366388" | "5367598" | "5373421" | "5383051" | "5390272" | "5398295" | "5398820" | "5399814" | "5401193" | "5402515" | "5408557" | "5412751" | "5416837" | "5418874" | "5420956"					

		| "5420958" | "5421532" | "5438641" | "5442725" | "5442726" | "5443232" | "5444804" | "5448015" | "5450518" | "5458019" | "5471555" | "5479505" | "5481634" | "5481939" | "5490229" | "5497416" | "5497444" | "5511144" | "5511798" | "5519804" | "5530786" | "5535970" | "5538213" | "5542015" | "5546495" | "5548641" | "5553183" | "5553186" | "5563971" | "5572617" | "5575680" | "5577151" | "5590234" | "5595507" | "5596670" | "5600020" | "5602954" | "5608606" | "5613030" | "5617501" | "5638474" | "5640476" | "5640482").PN. OR ("5647043" | "5647045" | "5650334" | "5668910" | "5668911" | "5671273" | "5689605" | "5689607" | "5692079" | "5694511" | "5701380" | "5704573" | "5708742" | "5708751" | "5710851" | "5717810" | "5734776" | "5740300" | "5742982" | "5751874" | "5751882" | "5754724" | "5758003" | "5758004" | "5761026" | "5765698" | "5769908" | "5774612" | "5778122" | "5778130" | "5781686" | "5788087" | "5790741" | "5793920" | "5793921" | "5796908" | "5806687" | "5823646" | "5825955" | "5825961" | "5828807" | "5832162" | "5835657" | "5835658" | "5862290" | "5870519" | "5874733" | "5877565" | "5880864" | "5881200" | "5883995" | "5884003" | "5887095" | "5887106" | "5892877" | "5894540" | "5901220" | "5903693" | "5906342" | "5909298" | "5913006" | "5914976" | "5915055" | "5923804" | "5930425" | "5933557" | "5940563" | "5943460" | "5945633" | "5946440" | "5949946" | "5953962"					

		| "5956439" | "5956444" | "5956449" | "5966492" | "5969294" | "5975769" | "5978540" | "5980303" | "5987203" | "5993071" | "5995700" | "5999393" | "6001831" | "6009224" | "6009225" | "6011831" | "6027252" | "6027352" | "6041042" | "6044193" | "6049963" | "6058235" | "6061492" | "6078661" | "6079881" | "6088497" | "6118075" | "6127627" | "6130983" | "6134370" | "6141222" | "6149313" | "6149315" | "6151432" | "6160946" | "6170784" | "6172782" | "6175079" | "6181861" | "6188687" | "6188825" | "6192180" | "6200170" | "6201919" | "6201920" | "6208796" | "6212324" | "6215938" | "6216987" | "6227717" | "6229948" | "6234683" | "6234685").PN. OR ("6236795" | "6240229" | "6243522" | "6245998" | "6247851" | "6250816" | "6259850" | "6263141" | "6265680" | "6269212" | "6273532" | "6275641" | "6278829" | "6278831" | "6289618" | "6292614" | "6301424" | "6305848" | "6307997" | "6318824" | "6321017" | "6322279" | "6324575" | "6325549" | "6327059" | "6343313" | "6344615" | "6347888" | "6353696" | "6353697" | "6357712" | "6359228" | "6363198" | "6363200" | "6370309" | "6371419" | "6375129" | "6377218" | "6379052" | "6381642" | "6385374" | "6385381" | "6389214" | "6397166" | "6398149" | "6406314" | "6410850" | "6411767" | "6412986" | "6418262" | "6419519" | "6424781" | "6425694" | "6427045" | "6431762" | "6434313" | "6438310" | "6452925" | "6456773" | "6464402" | "6466724" | "6469905"					

		| "6478472" | "6480487" | "6480660" | "6483977" | "6484958" | "6494550" | "6496640" | "6504988" | "6507980" | "6510274" | "6532332" | "6533472" | "6535397" | "6535682" | "6539147" | "6539160" | "6542688" | "6544075" | "6550977" | "6554485" | "6560334" | "6567601" | "6568542" | "6571048" | "6577595" | "6577801" | "6579014" | "6584267" | "6585423" | "6587630" | "6588938" | "6591051" | "6591053" | "6592266" | "6597670" | "6600106" | "6600866" | "6601997" | "6612515" | "6612874" | "6614978" | "6614980" | "6621975" | "6622873" | "6624389" | "6625374" | "6625375" | "6631237" | "6640042" | "6644863" | "6647197" | "6648520" | "6654536" | "6668127" | "6669149" | "6677520" | "6679604" | "6684005" | "6687450" | "6693552" | "6695620" | "6701056" | "6710366").PN. OR ("6715619" | "6719149" | "6721482" | "6741784" | "6741785" | "6746037" | "6748154" | "6748155" | "6758600" | "6768860" | "6771861" | "6773297" | "6778525" | "6778752" | "6786647" | "6786743" | "6786896" | "6788871" | "6792190" | "6798751" | "6804447" | "6810194" | "6813412" | "6816660" | "6818834" | "6819856" | "6819857" | "6822874" | "6826174" | "6826346" | "6826631" | "6830489" | "6839428" | "6839438" | "6840815" | "6845207" | "6847614" | "6848862" | "6850685" | "6853637" | "6854894" | "6856334" | "6856505" | "6863444" | "6865331" | "6865334" | "6866541" | "6868216" | "6869227" | "6870734" | "6870997" | "6879545"					

		| "6915058" | "6920273" | "6920274" | "6923406" | "6925241" | "6934451" | "6934456" | "6935598" | "6937807" | "6944383" | "6944389" | "6945701" | "6952530" | "6963690" | "6968107" | "6968111" | "6985665" | "6993237" | "7000784" | "7005582" | "7006748" | "7007296" | "7025275" | "7027695" | "7027706" | "7031588" | "7035510" | "7038137" | "7048447" | "7054513" | "7066748" | "7068907" | "7070459" | "7077710" | "7079744" | "7090406" | "7090407" | "7094095" | "7097047" | "7101093" | "7102884" | "7103255" | "7110654" | "7111990" | "7113679" | "7113686" | "7113687" | "7116491" | "7116883" | "7118281" | "7118405" | "7120347" | "7120348" | "7120349" | "7127143" | "7128471" | "7136555" | "7139462" | "7140903" | "7147383" | "7170466" | "7171099" | "7171121" | "7181142" | "7186134" | "7193783" | "7194181" | "7195521" | "7200314" | "7200316" | "7201595" | "7217040" | "7218526").PN. OR ("7220065" | "7221832" | "7228036" | "7228047" | "7231125" | "7234878" | "7236677" | "7239789" | "7245809" | "7259325" | "7266283" | "7270485" | "7272291" | "7274852" | "7284785" | "7287913" | "7289731" | "7292769" | "7298950" | "7300216" | "7300308" | "7302149" | "7302153" | "7302154" | "7308184" | "7310471" | "7310472" | "7315681" | "7325975" | "7330624" | "7330625" | "7330626" | "7330629" | "7331718" | "7340145" | "7349615" | "7352946" | "7352947" | "7373071" | "7376321" | "7376323" | "7391952"					

		| "7397996" | "7400813" | "7404736" | "7409137" | "7414198" | "7417188" | "7418182" | "7418184" | "7421182" | "7428363" | "7435090" | "7437049" | "7439453" | "7454113" | "7460757" | "7460758" | "7461981" | "7462779" | "7463810" | "7463811" | "7469090" | "7471867" | "7474828" | "7477824" | "7477826" | "7480438" | "7488205" | "7493002" | "7496269" | "7499622" | "7499623" | "7507111" | "7509015" | "7509016" | "7510421" | "7522804" | "7523898" | "7526171" | "7526172" | "7526174" | "7529458" | "7534958" | "7536075" | "7540666" | "7542645" | "7544085" | "7552899" | "7555193" | "7558458" | "7565051" | "7567744" | "7570860" | "7570861" | "7577331" | "7596293" | "7603020" | "7607938" | "7609967" | "7613377" | "7614903" | "7620272" | "7620287" | "7641398" | "7668430" | "7668433" | "7672561" | "7676135" | "7689079" | "7694926" | "7697811" | "7706294" | "7715125" | "7715683" | "7734138" | "7740409" | "7743495" | "7751674" | "7751675" | "7756371" | "7756382" | "7760984" | "7764858" | "7764859").PN. OR ("7769266" | "7805044" | "7809232" | "7809235" | "7811136" | "7822310" | "7837495" | "7850372" | "7853112" | "7856166" | "7862369" | "7869685" | "7876580" | "7899298" | "7914332" | "7942589" | "7945135" | "7945136" | "7945138" | "7970250" | "7991252" | "8009959" | "8014171" | "8014646" | "8020813" | "8059932" | "8093499" | "8107785" | "8131126" | "8184938" | "8206043" | "8206058"					

		| "8220881" | "8226305" | "8249410" | "8251591" | "8270798" | "8280216" | "8285104" | "8301004" | "8331752" | "8353494" | "8369679" | "8391666" | "8472773" | "8491331" | "8528872" | "8537477" | "8538226" | "8559783" | "D330368" | "D448005" | "D466087" | "Entry 3 of 73 File:" | "RE34955" | "RE37489" | "RE38311").PN. OR ("8913866").URPN.					
L15	74	("20030223723" | "4900123" | "5915802" | "6282360" | "6356697" | "6758600" | "6869227" | "6925241" | "7205481" | "7333706").PN. OR ("7509015").URPN.	(US-PGPUB; USPAT; USOCR)	OR	ON	ON	2019/12/17 11:46 AM
L16	24	(US-20160062050-$ or US-20160062055-$ or US-20160062058-$ or US-20160062068-$ or US-20170192191-$ or US-20180003912-$ or US-20180100976-$ or US-20190004268-$ or US-20190101717-$ or US-20090290842-$ or US-20160033732-$ or US-20020131730-$ or US-20070131628-$).did. or (US-10215944-$ or US-10254497-$ or US-9841574-$ or US-4792203-$ or US-8554044-$ or US-4840449-$ or US-8913866-$ or US-7509015-$ or US-9075216-$ or US-9008485-$).did. or (EP-3404461-$).did.	(US-PGPUB; USPAT; FPRS)	OR	ON	ON	2019/12/17 03:54 PM
L17	5	L16 and magnet$4	(US-PGPUB; USPAT; USOCR; FPRS; EPO; JPO; DERWENT; IBM_TDB)	OR	ON	ON	2019/12/17 03:54 PM
L18	1494	G02B6/$.cpc. and (magnet$5 same (cassette or module))	(US-PGPUB; USPAT; USOCR; FPRS; EPO; JPO; DERWENT; IBM_TDB)	OR	ON	ON	2019/12/17 03:56 PM
L19	70	G02B6/4453-4455.cpc.	(US-PGPUB; USPAT;	OR	ON	ON	2019/12/17

		and (magnet$5)	USOCR; FPRS; EPO; JPO; DERWENT; IBM_TDB)				04:36 PM
L20	26	(US-20160062050-$ or US-20160062055-$ or US-20160062058-$ or US-20160062068-$ or US-20170192191-$ or US-20180003912-$ or US-20180100976-$ or US-20190004268-$ or US-20190101717-$ or US-20090290842-$ or US-20160033732-$ or US-20020131730-$ or US-20070131628-$).did. or (US-10215944-$ or US-10254497-$ or US-9841574-$ or US-4792203-$ or US-8554044-$ or US-4840449-$ or US-8913866-$ or US-7509015-$ or US-9075216-$ or US-9008485-$ or US-7331722-$ or US-10281672-$).did. or (EP-3404461-$).did.	(US-PGPUB; USPAT; FPRS)	OR	ON	ON	2019/12/17 04:45 PM
L21	6	(US-20090290842-$ or US-20160062050-$ or US-20190004268-$ or US-20190101717-$).did. or (US-10215944-$ or US-4792203-$).did.	(US-PGPUB; USPAT)	OR	ON	ON	2019/12/17 04:45 PM
L22	20	L20 not L21	(US-PGPUB; USPAT; USOCR; FPRS; EPO; JPO; DERWENT; IBM_TDB)	OR	ON	ON	2019/12/17 04:46 PM
L24	1	("2019/0101717").URPN.	(USPAT)	OR	ON	ON	2020/05/18 10:11 AM
L25	35	("20020150370" | "20050237721" | "20110274402" | "20130188919" | "20150219866" | "20170269324" | "20190101717" | "20190107682" | "4595255" | "4752110" | "4884863" | "4971421" | "5208894" | "5519804" | "5546495" | "5737475" | "5825962" | "5835657" |	(US-PGPUB; USPAT; USOCR)	OR	ON	ON	2020/05/18 10:12 AM

		"5898129" | "6226436" | "6438310" | "6496640" | "6504988" | "6748155" | "6944389" | "7970249" | "8009954" | "8154886" | "8554044" | "9008485" | "9366837" | "9423585" | "9575274" | "9588317" | "9791653").PN. OR ("10641980").URPN.					
L26	77	("20030223723" | "4900123" | "5915802" | "6282360" | "6356697" | "6758600" | "6869227" | "6925241" | "7205481" | "7333706").PN. OR ("7509015").URPN.	(US-PGPUB; USPAT; USOCR)	OR	ON	ON	2020/05/18 10:18 AM
L27	8985	G02B6/4453-4455.cpc.	(US-PGPUB; USPAT; USOCR; FPRS; EPO; JPO; DERWENT; IBM_TDB)	OR	ON	ON	2020/05/18 10:24 AM
L28	674	L27 and modular	(US-PGPUB; USPAT; USOCR; FPRS; EPO; JPO; DERWENT; IBM_TDB)	OR	ON	ON	2020/05/18 10:27 AM
L29	82	L27 and (((dissimilar or differ$4 or varying or various or variable) near4 (size or footprint or width)) same (module or cassette))	(US-PGPUB; USPAT; USOCR; FPRS; EPO; JPO; DERWENT; IBM_TDB)	OR	ON	ON	2020/05/18 10:37 AM
L30	2	("20190187394" | "9223094").PN. OR ("10514518").URPN.	(US-PGPUB; USPAT; USOCR)	OR	ON	ON	2020/05/18 10:39 AM
L31	29	(US-20160062050-$ or US-20160062055-$ or US-20160062058-$ or US-20160062068-$ or US-20170192191-$ or US-20180003912-$ or US-20180100976-$ or US-20190004268-$ or US-20190101717-$ or US-20090290842-$ or US-20160033732-$ or US-20020131730-$ or US-20070131628-$ or US-20190107682-$ or US-20190187394-$).did. or (US-10215944-$ or US-10254497-$ or US-9841574-$ or US-4792203-$ or US-8554044-$ or US-	(US-PGPUB; USPAT; FPRS)	OR	ON	ON	2020/05/18 10:43 AM

		4840449-$ or US-8913866-$ or US-7509015-$ or US-9075216-$ or US-9008485-$ or US-7331722-$ or US-10281672-$ or US-10514518-$).did. or (EP-3404461-$).did.					
L32	6	(US-20090290842-$ or US-20160062050-$ or US-20190004268-$ or US-20190101717-$).did. or (US-10215944-$ or US-4792203-$).did.	(US-PGPUB; USPAT)	OR	ON	ON	2020/05/18 10:43 AM
L33	9	(US-20020131730-$ or US-20070131628-$ or US-20160033732-$).did. or (US-10281672-$ or US-7331722-$ or US-7509015-$ or US-8913866-$ or US-9008485-$ or US-9075216-$).did.	(US-PGPUB; USPAT)	OR	ON	ON	2020/05/18 10:43 AM
L34	14	L31 not (L32 or L33)	(US-PGPUB; USPAT; USOCR; FPRS; EPO; JPO; DERWENT; IBM_TDB)	OR	ON	ON	2020/05/18 10:44 AM
L35	19	("10215944" OR "10281672" OR "10514518" OR "20070131628" OR "20090290842" OR "20160033732" OR "20160062050" OR "20190004268" OR "20190101717" OR "20190107682" OR "20190162924" OR "20190187394" OR "20200131730" OR "4792203" OR "7331722" OR "7509015" OR "8913866" OR "9008485" OR "9075216").pn.	(US-PGPUB; USPAT)	OR	ON	ON	2021/09/07 02:14 PM
L36	27	((("PILON") near3 ("VINCENT"))).INV.	(US-PGPUB; USPAT; USOCR; EPO; JPO; DERWENT)	OR	ON	ON	2021/09/07 03:33 PM
L37	30	((EP-3404461-A1).did. AND FPRS.dbnm.) OR ((US-20160062050-A1	(USPAT; US-PGPUB; FPRS; USOCR; IBM_TDB; EPO; JPO;	OR	ON	ON	2021/09/07 03:50 PM

		OR US-20160062055-A1 OR US-20160062058-A1 OR US-20160062068-A1 OR US-20170192191-A1 OR US-20180003912-A1 OR US-20180100976-A1 OR US-20190004268-A1 OR US-20190101717-A1 OR US-20090290842-A1 OR US-20160033732-A1 OR US-20020131730-A1 OR US-20070131628-A1 OR US-20190107682-A1 OR US-20190187394-A1 OR US-20190162924-A1).did. AND PGPB.dbnm.) OR ((US-10215944-B2 OR US-10254497-B2 OR US-9841574-B1 OR US-4792203-A OR US-8554044-B2 OR US-4840449-A OR US-8913866-B2 OR US-7509015-B2 OR US-9075216-B2 OR US-9008485-B2 OR US-7331722-B2 OR US-10281672-B1 OR US-10514518-B1).did. AND USPT.dbnm.)	DERWENT; FIT (AU, AP, AT, BE, BG, BR, BY, CA, CH, CN, CS, CU, CZ, DD, DE, DK, EA, EE, EP, ES, FI, FR, GB, HR, HU, ID, IE, IL, IS, IT, JP, KR, LT, LU, LV, MA, OA, RU, SU, WO, MC, MD, MY, NL, NO, NZ, PH, PL, PT, RO, RS, SE, SG, SI, SK, TH, TN, TR, TW, UA, VN))				
L38	30	((EP-3404461-A1).did. AND FPRS.dbnm.) OR ((US-20160062050-A1 OR US-20160062055-A1 OR US-20160062058-A1 OR US-20160062068-A1 OR US-20170192191-A1 OR US-20180003912-A1 OR US-20180100976-A1 OR US-20190004268-A1 OR US-20190101717-A1 OR US-20090290842-A1 OR US-20160033732-A1 OR US-20020131730-A1 OR US-20070131628-A1 OR US-20190107682-A1 OR US-	(US-PGPUB; USPAT; USOCR; FIT (AU, AP, AT, BE, BG, BR, BY, CA, CH, CN, CS, CU, CZ, DD, DE, DK, EA, EE, EP, ES, FI, FR, GB, HR, HU, ID, IE, IL, IS, IT, JP, KR, LT, LU, LV, MA, OA, RU, SU, WO); FPRS; EPO; JPO; DERWENT; IBM_TDB)	OR	ON	ON	2021/09/07 03:50 PM

		20190187394-A1 OR US-20190162924-A1).did. AND PGPB.dbnm.) OR ((US-10215944-B2 OR US-10254497-B2 OR US-9841574-B1 OR US-4792203-A OR US-8554044-B2 OR US-4840449-A OR US-8913866-B2 OR US-7509015-B2 OR US-9075216-B2 OR US-9008485-B2 OR US-7331722-B2 OR US-10281672-B1 OR US-10514518-B1).did. AND USPT.dbnm.)					
L39	11	L38 NOT L35	(US-PGPUB; USPAT; FIT (AU, AP, AT, BE, BG, BR, BY, CA, CH, CN, CS, CU, CZ, DD, DE, DK, EA, EE, EP, ES, FI, FR, GB, HR, HU, ID, IE, IL, IS, IT, JP, KR, LT, LU, LV, MA, OA, RU, SU, WO))	OR	ON	ON	2021/09/07 03:51 PM
L40	2	"6208593".pn.	(US-PGPUB; USPAT; FIT (AU, AP, AT, BE, BG, BR, BY, CA, CH, CN, CS, CU, CZ, DD, DE, DK, EA, EE, EP, ES, FI, FR, GB, HR, HU, ID, IE, IL, IS, IT, JP, KR, LT, LU, LV, MA, OA, RU, SU, WO))	OR	ON	ON	2021/12/16 02:15 PM
L41	15	"2030171"	(US-PGPUB; USPAT; FIT (AU, AP, AT, BE, BG, BR, BY, CA, CH, CN, CS, CU, CZ, DD, DE, DK, EA, EE, EP, ES, FI, FR, GB, HR, HU, ID, IE, IL, IS, IT, JP, KR, LT, LU, LV, MA, OA, RU, SU, WO))	OR	ON	ON	2021/12/16 02:16 PM
L42	30	((EP-3404461-A1).did. AND FPRS.dbnm.) OR ((US-20160062050-A1 OR US-20160062055-A1 OR US-20160062058-A1 OR US-20160062068-A1 OR US-20170192191-A1 OR US-20180003912-A1 OR US-20180100976-A1	(US-PGPUB; USPAT; USOCR; FIT (AU, AP, AT, BE, BG, BR, BY, CA, CH, CN, CS, CU, CZ, DD, DE, DK, EA, EE, EP, ES, FI, FR, GB, HR, HU, ID, IE, IL, IS, IT, JP, KR, LT, LU, LV, MA, OA, RU, SU, WO); FPRS; EPO; JPO; DERWENT; IBM_TDB)	OR	ON	ON	2021/12/16 02:29 PM

		OR US-20190004268-A1 OR US-20190101717-A1 OR US-20090290842-A1 OR US-20160033732-A1 OR US-20020131730-A1 OR US-20070131628-A1 OR US-20190107682-A1 OR US-20190187394-A1 OR US-20190162924-A1).did. AND PGPB.dbnm.) OR ((US-10215944-B2 OR US-10254497-B2 OR US-9841574-B1 OR US-4792203-A OR US-8554044-B2 OR US-4840449-A OR US-8913866-B2 OR US-7509015-B2 OR US-9075216-B2 OR US-9008485-B2 OR US-7331722-B2 OR US-10281672-B1 OR US-10514518-B1).did. AND USPT.dbnm.)					
L43	32	(Artificial Intelligence) More like doc: US-10215944-B2 Text: (US-9075216-B2 OR US-20110268404-A1 OR JP-2019525225-A OR TW-I708084-B OR CN-109416449-B OR TW-201812364-A OR EP-3479153-A1 OR WO-2018005222-A1 OR US-20180003912-A1 OR CN-109416449-A OR US-10795107-B2 OR CA-3019081-A1 OR US-20190101717-A1 OR US-20200400908-A1 OR JP-2017531205-A OR TW-202115446-A OR US-20200341223-A1 OR EP-3671301-A1 OR US-20160299308-A1 OR CN-112612091-A).did.	(US-PGPUB; USPAT; USOCR; FIT (AU, AP, AT, BE, BG, BR, BY, CA, CH, CN, CS, CU, CZ, DD, DE, DK, EA, EE, EP, ES, FI, FR, GB, HR, HU, ID, IE, IL, IS, IT, JP, KR, LT, LU, LV, MA, OA, RU, SU, WO, MC, MD, MY, NL, NO, NZ, PH, PL, PT, RO, RS, SE, SG, SI, SK, TH, TN, TR, TW, UA, VN); FPRS; EPO; JPO; DERWENT; IBM_TDB)	OR	ON	ON	2022/02/25 11:49 AM
L44	35	(Artificial Intelligence) More like doc: US-20200400908-A1 Text:	(US-PGPUB; USPAT; USOCR; FIT (AU, AP, AT, BE, BG, BR, BY, CA, CH, CN, CS, CU,	OR	ON	ON	2022/02/25 11:50 AM

		(US-20190219786-A1 OR CA-3030399-A1 OR US-20180011275-A1 OR US-10185108-B2 OR CA-2972850-A1 OR CN-109416449-A OR US-20210109304-A1 OR US-11036020-B2 OR EP-1185897-B1 OR US-10795107-B2 OR US-20210072482-A1 OR CA-3019081-A1 OR US-20190101717-A1 OR TW-I708084-B OR TW-201812364-A OR JP-2019525225-A OR CN-109416449-B OR US-20200310064-A1 OR US-10866378-B2 OR US-11187864-B2).did.	CZ, DD, DE, DK, EA, EE, EP, ES, FI, FR, GB, HR, HU, ID, IE, IL, IS, IT, JP, KR, LT, LU, LV, MA, OA, RU, SU, WO, MC, MD, MY, NL, NO, NZ, PH, PL, PT, RO, RS, SE, SG, SI, SK, TH, TN, TR, TW, UA, VN); FPRS; EPO; JPO; DERWENT; IBM_TDB)				
L45	28	(Artificial Intelligence) More like doc: US-10215944-B2 Text: (US-9075216-B2 OR US-20110268404-A1 OR JP-2019525225-A OR TW-463066-B OR TW-I708084-B OR JP-7033090-B2 OR TW-201812364-A OR CN-109416449-B OR CN-109416449-A OR EP-3479153-A1 OR WO-2018005222-A1 OR US-20180003912-A1 OR US-10795107-B2 OR CA-3019081-A1 OR US-20190101717-A1 OR US-20200400908-A1 OR JP-2017531205-A OR TW-I755857-B OR TW-202115446-A OR US-20200341223-A1).did.	(US-PGPUB; USPAT; USOCR; FIT (AU, AP, AT, BE, BG, BR, BY, CA, CH, CN, CS, CU, CZ, DD, DE, DK, EA, EE, EP, ES, FI, FR, GB, HR, HU, ID, IE, IL, IS, IT, JP, KR, LT, LU, LV, MA, OA, RU, SU, WO, MC, MD, MY, NL, NO, NZ, PH, PL, PT, RO, RS, SE, SG, SI, SK, TH, TN, TR, TW, UA, VN); FPRS; EPO; JPO; DERWENT; IBM_TDB)	OR	ON	ON	2022/04/22 01:28 PM
L46	39	(Artificial Intelligence) More like doc: US-20200400908-A1 Text: (EP-2277071-A2 OR US-20190219786-A1 OR CN-102844693-A OR CA-3030399-A1 OR US-10185108-B2 OR US-20210109304-A1 OR US-11036020-B2	(US-PGPUB; USPAT; USOCR; FIT (AU, AP, AT, BE, BG, BR, BY, CA, CH, CN, CS, CU, CZ, DD, DE, DK, EA, EE, EP, ES, FI, FR, GB, HR, HU, ID, IE, IL, IS, IT, JP, KR, LT, LU, LV, MA, OA, RU, SU, WO, MC, MD, MY, NL, NO, NZ, PH, PL, PT, RO,	OR	ON	ON	2022/04/22 01:29 PM

		OR EP-1185897-B1 OR US-20210072482-A1 OR US-10795107-B2 OR CA-3019081-A1 OR US-20190101717-A1 OR CN-102844693-B OR US-11249269-B2 OR US-20200257071-A1 OR US-20200310064-A1 OR US-10866378-B2 OR US-6504986-B1 OR US-11187864-B2 OR US-20220057590-A1).did.	RS, SE, SG, SI, SK, TH, TN, TR, TW, UA, VN); FPRS; EPO; JPO; DERWENT; IBM_TDB)				
L47	2607	G02B6/4455.cpc.	(US-PGPUB; USPAT; FIT (AU, AP, AT, BE, BG, BR, BY, CA, CH, CN, CS, CU, CZ, DD, DE, DK, EA, EE, EP, ES, FI, FR, GB, HR, HU, ID, IE, IL, IS, IT, JP, KR, LT, LU, LV, MA, OA, RU, SU, WO))	OR	ON	ON	2022/04/22 01:34 PM
L48	830	L47 AND (tray WITH (module OR cassette))	(US-PGPUB; USPAT; FIT (AU, AP, AT, BE, BG, BR, BY, CA, CH, CN, CS, CU, CZ, DD, DE, DK, EA, EE, EP, ES, FI, FR, GB, HR, HU, ID, IE, IL, IS, IT, JP, KR, LT, LU, LV, MA, OA, RU, SU, WO))	OR	ON	ON	2022/04/22 01:35 PM
L49	38	((US-20190162924-A1 OR US-20160062050-A1 OR US-20160062055-A1 OR US-20160062058-A1 OR US-20160062068-A1 OR US-20170192191-A1 OR US-20180003912-A1 OR US-20180100976-A1 OR US-20190004268-A1 OR US-20190101717-A1 OR US-20090290842-A1 OR US-20160033732-A1 OR US-20190187394-A1 OR US-20190107682-A1 OR US-20070131628-A1 OR US-20020131730-A1).did. AND PGPB.dbnm.) OR ((US-10215944-B2 OR US-	(US-PGPUB; USPAT; USOCR; FIT (AU, AP, AT, BE, BG, BR, BY, CA, CH, CN, CS, CU, CZ, DD, DE, DK, EA, EE, EP, ES, FI, FR, GB, HR, HU, ID, IE, IL, IS, IT, JP, KR, LT, LU, LV, MA, OA, RU, SU, WO); FPRS; EPO; JPO; DERWENT; IBM_TDB)	OR	ON	ON	2022/04/22 03:56 PM

		10254497-B2 OR US-9841574-B1 OR US-4792203-A OR US-8554044-B2 OR US-10514518-B1 OR US-10281672-B1 OR US-7331722-B2 OR US-9008485-B2 OR US-9075216-B2 OR US-7509015-B2 OR US-8913866-B2 OR US-4840449-A OR US-11187864-B2 OR US-10795107-B2 OR US-10768387-B2 OR US-10598884-B2 OR US-10656359-B2 OR US-10359595-B2 OR US-9690064-B2).did. AND USPT.dbnm.) OR ((EP-3404461-A1).did. AND FPRS.dbnm.) OR ((US-20200400908-A1).did. AND DWPI.dbnm.)					
L50	19	("10215944" OR "10281672" OR "10514518" OR "20070131628" OR "20090290842" OR "20160033732" OR "20160062050" OR "20190004268" OR "20190101717" OR "20190107682" OR "20190162924" OR "20190187394" OR "20200131730" OR "4792203" OR "7331722" OR "7509015" OR "8913866" OR "9008485" OR "9075216").pn.	(US-PGPUB; USPAT)	OR	ON	ON	2022/04/22 03:56 PM
L51	18	L49 NOT L50	(US-PGPUB; USPAT; FIT (AU, AP, AT, BE, BG, BR, BY, CA, CH, CN, CS, CU, CZ, DD, DE, DK, EA, EE, EP, ES, FI, FR, GB, HR, HU, ID, IE, IL, IS, IT, JP, KR, LT, LU, LV, MA, OA, RU, SU, WO))	OR	ON	ON	2022/04/22 03:56 PM
L52	16	L51 NOT (((US-20160062068-A1 OR US-20180003912-A1).did AND PGPB.dbnm))	(US-PGPUB; USPAT; FIT (AU, AP, AT, BE, BG, BR, BY, CA, CH, CN, CS, CU, CZ, DD, DE, DK, EA, EE, EP,	OR	ON	ON	2022/04/22 03:57 PM

			ES, FI, FR, GB, HR, HU, ID, IE, IL, IS, IT, JP, KR, LT, LU, LV, MA, OA, RU, SU, WO))				
L53	38	((US-20160062050-A1 OR US-20020131730-A1 OR US-20070131628-A1 OR US-20190107682-A1 OR US-20190187394-A1 OR US-20090290842-A1 OR US-20190162924-A1 OR US-20160062055-A1 OR US-20160062058-A1 OR US-20160062068-A1 OR US-20170192191-A1 OR US-20180003912-A1 OR US-20180100976-A1 OR US-20190004268-A1 OR US-20190101717-A1 OR US-20160033732-A1).did. AND PGPB.dbnm.) OR ((EP-3404461-A1).did. AND FPRS.dbnm.) OR ((US-4840449-A OR US-8913866-B2 OR US-7509015-B2 OR US-9075216-B2 OR US-9008485-B2 OR US-7331722-B2 OR US-10281672-B1 OR US-10514518-B1 OR US-8554044-B2 OR US-10215944-B2 OR US-10254497-B2 OR US-9841574-B1 OR US-4792203-A OR US-11187864-B2 OR US-10795107-B2 OR US-10768387-B2 OR US-10598884-B2 OR US-10656359-B2 OR US-10359595-B2 OR US-9690064-B2).did. AND USPT.dbnm.) OR ((US-20200400908-A1).did. AND DWPI.dbnm.)	(US-PGPUB; USPAT; USOCR; FIT (AU, AP, AT, BE, BG, BR, BY, CA, CH, CN, CS, CU, CZ, DD, DE, DK, EA, EE, EP, ES, FI, FR, GB, HR, HU, ID, IE, IL, IS, IT, JP, KR, LT, LU, LV, MA, OA, RU, SU, WO); FPRS; EPO; JPO; DERWENT; IBM_TDB)	OR	ON	ON	2023/03/02 06:30 AM
L54	29	(Artificial Intelligence) More like doc: US-10215944-B2 Text: (EP-3479153-A1 OR	(US-PGPUB; USPAT; USOCR; FIT (AU, AP, AT, BE, BG, BR, BY, CA, CH, CN, CS, CU, CZ, DD, DE, DK, EA,	OR	ON	ON	2023/03/02 06:41 AM

		WO-2018005222-A1 OR US-20180003912-A1 OR KR-20190021243-A OR CN-109416449-B OR KR-102480586-B1 OR US-20220299724-A1 OR US-20200341223-A1 OR US-11372185-B2 OR US-20190154936-A1 OR JP-2019525225-A OR JP-7033090-B2 OR CN-112612091-A OR US-10725258-B2 OR TW-201812364-A OR TW-I755857-B OR TW-I708084-B OR TW-202115446-A OR MX-2018015550-A OR CN-109416449-A).did.	EE, EP, ES, FI, FR, GB, HR, HU, ID, IE, IL, IS, IT, JP, KR, LT, LU, LV, MA, OA, RU, SU, WO, MC, MD, MY, NL, NO, NZ, PH, PL, PT, RO, RS, SE, SG, SI, SK, TH, TN, TR, TW, UA, VN); FPRS; EPO; JPO; DERWENT; IBM_TDB)				
L55	27	("10215944" OR "10281672" OR "10359595" OR "10514518" OR "10598884" OR "10656359" OR "10768387" OR "10795107" OR "11187864" OR "20020131730" OR "20070131628" OR "20090290842" OR "20160033732" OR "20160062050" OR "20160062068" OR "20190004268" OR "20190101717" OR "20190107682" OR "20190162924" OR "20190187394" OR "20200131730" OR "4792203" OR "7331722" OR "7509015" OR "8913866" OR "9008485" OR "9075216").pn.	(US-PGPUB; USPAT)	OR	ON	ON	2023/03/02 06:41 AM
L56	51	(vincent near2 pilon).in.	(US-PGPUB; USPAT; FIT (AU, AP, AT, BE, BG, BR, BY, CA, CH, CN, CS, CU, CZ, DD, DE, DK, EA, EE, EP, ES, FI, FR, GB, HR, HU, ID, IE, IL, IS, IT, JP, KR, LT, LU, LV, MA, OA, RU, SU, WO))	OR	ON	ON	2023/03/02 06:45 AM

L57	6956	G02B6/4453-4455.cpc.	(US-PGPUB; USPAT; FIT (AU, AP, AT, BE, BG, BR, BY, CA, CH, CN, CS, CU, CZ, DD, DE, DK, EA, EE, EP, ES, FI, FR, GB, HR, HU, ID, IE, IL, IS, IT, JP, KR, LT, LU, LV, MA, OA, RU, SU, WO))	OR	ON	ON	2023/03/02 06:52 AM
L58	39	L57 AND (standard ADJ width)	(US-PGPUB; USPAT; FIT (AU, AP, AT, BE, BG, BR, BY, CA, CH, CN, CS, CU, CZ, DD, DE, DK, EA, EE, EP, ES, FI, FR, GB, HR, HU, ID, IE, IL, IS, IT, JP, KR, LT, LU, LV, MA, OA, RU, SU, WO))	OR	ON	ON	2023/03/02 06:53 AM
L59	1460	L57 AND (modular$4)	(US-PGPUB; USPAT; FIT (AU, AP, AT, BE, BG, BR, BY, CA, CH, CN, CS, CU, CZ, DD, DE, DK, EA, EE, EP, ES, FI, FR, GB, HR, HU, ID, IE, IL, IS, IT, JP, KR, LT, LU, LV, MA, OA, RU, SU, WO))	OR	ON	ON	2023/03/02 06:54 AM
L60	10	L53 NOT L55	(US-PGPUB; USPAT; FIT (AU, AP, AT, BE, BG, BR, BY, CA, CH, CN, CS, CU, CZ, DD, DE, DK, EA, EE, EP, ES, FI, FR, GB, HR, HU, ID, IE, IL, IS, IT, JP, KR, LT, LU, LV, MA, OA, RU, SU, WO))	OR	ON	ON	2023/03/02 07:22 AM

PE2E SEARCH - Search History (Interference)

Ref #	Hits	Search Query	DBs	Default Operator	Plurals	British Equivalents	Time Stamp
N23	72	((cassette or module) and metal$4 and optic$4 and (fiber or fibre) and magnet$4 and (tray or housing or drawer or slide)).clm.	(US-PGPUB; USPAT)	OR	ON	ON	2019/12/17 04:33 PM
N35	3	(tray and cassette and (fiber or fibre) and optic$4 and standard and width and (fasten$4 or lock$4 or secur$4 or attach$4 or fix$4)).clm.	(US-PGPUB; USPAT)	OR	ON	ON	2020/05/18 10:48 AM
N36	7	(tray and cassette and (fiber or fibre) and	(US-PGPUB; USPAT)	OR	ON	ON	2020/05/18 10:49 AM

		optic$4 and width and (fasten$4 or lock$4 or secur$4 or attach$4 or fix$4)).clm.					
N37	104	((fiber OR fibre) AND optic$4 AND (cassette OR module) AND tray AND slid$7 AND (receptacle OR adapter OR plug) AND (fasten$4 OR attach$4 OR fix$4 OR position$4)).clm.	(US-PGPUB; USPAT)	OR	ON	ON	2022/04/22 03:17 PM
N38	21	(method AND tray AND (fiber OR fibre) AND optic$4 AND (module OR cassette) AND width).clm.	(US-PGPUB; USPAT)	OR	ON	ON	2022/04/22 03:53 PM
N39	9	(cassette AND (fiber OR fibre) AND optic$4 AND tray AND standard AND width AND slid$7).clm.	(US-PGPUB; USPAT)	OR	ON	ON	2023/03/02 07:26 AM

Doc Code: MFEE.C.AD
Document Description: Maintenance Fee Address Change

PTO/AIA/47 (12-20)
Approved for use through 09/30/2021. OMB 0651-0016
U.S. Patent and Trademark Office; U.S. DEPARTMENT OF COMMERCE
Under the Paperwork Reduction Act of 1995, no person is required to respond to a collection of information unless it displays a valid OMB control number.

"FEE ADDRESS" INDICATION FORM

Address to:
Mail Stop Maintenance Fee
Director of the United States
Patent and Trademark Office
P.O. Box 1450
Alexandria, VA 22313-1450

-OR-

Fax to:
571-273-6500

INSTRUCTIONS: The issue fee must have been paid for the application(s) listed on this form. In addition, only an address represented by a Customer Number can be established as the fee address for maintenance fee purposes (hereafter, fee address). A fee address should be established when correspondence related to maintenance fees should be mailed to a different address than the correspondence address for the application.

When to check the first box below: If you have a Customer Number to represent the fee address.

When to check the second box below: If you have no Customer Number representing the desired fee address, in which case a completed Request for Customer Number (PTO/SB/125) must be attached to this form. For more information on Customer Numbers, see the Manual of Patent Examining Procedure (MPEP) § 403.

For the following listed application(s), please recognize as the "Fee Address" under the provisions of 37 CFR 1.363 the address associated with:

☑ Customer Number: 25545

OR

☐ The attached Request for Customer Number form (PTO/SB/125)

PATENT NUMBER (if known)	APPLICATION NUMBER
	17/929,566

Completed by (check one):

☐ Applicant/Inventor

☑ Attorney or Agent of record 55757 (Reg. No.)

☐ Assignee of record of the entire interest. See 37 CFR 3.71. Statement under 37 CFR 3.73(c) (Form PTO/AIA/96) is enclosed or was filed on _____ (Date)

/Hugh Mansfield Reg.# 55757/
Signature

Hugh Mansfield
Typed or printed name

514 397 5170
Requester's telephone number

7 Apr 2023
Date

NOTE: Signatures of all the inventors or assignees of record of the entire interest or their representative(s) are required. If the assignee is a juristic entity, this form must be signed by a patent practitioner (attorney or agent) of record. Submit multiple forms if more than one signature is required, see below*.

☐ *Total of _____ forms are submitted

This collection of information is required by 37 CFR 1.363. The information is required to obtain or retain a benefit by the public, which is to indicate (and for the USPTO to process) a fee address. Confidentiality is governed by 35 U.S.C. 122 and 37 CFR 1.11 and 1.14. This collection is estimated to take 5 minutes to complete, including gathering, preparing, and submitting the completed form to the USPTO. Time will vary depending upon the individual case. Any comments on the amount of time you require to complete this form and/or suggestions for reducing this burden, should be sent to the Chief Information Officer, U.S. Patent and Trademark Office, U.S. Department of Commerce, P.O. Box 1450, Alexandria, VA 22313-1450. DO NOT SEND COMPLETED FORMS TO THE PREVIOUS ADDRESS. **SEND COMPLETED FORMS TO: Mail Stop Maintenance Fee, Director of the United States Patent and Trademark Office, P.O. Box 1450, Alexandria, VA 22313-1450.**

If you need assistance in completing the form, call 1-800-PTO-9199 and select option 2.

Privacy Act Statement

The **Privacy Act of 1974 (P.L. 93-579)** requires that you be given certain information in connection with your submission of the attached form related to a patent application or patent. Accordingly, pursuant to the requirements of the Act, please be advised that: (1) the general authority for the collection of this information is 35 U.S.C. 2(b)(2); (2) furnishing of the information solicited is voluntary; and (3) the principal purpose for which the information is used by the U.S. Patent and Trademark Office is to process and/or examine your submission related to a patent application or patent. If you do not furnish the requested information, the U.S. Patent and Trademark Office may not be able to process and/or examine your submission, which may result in termination of proceedings or abandonment of the application or expiration of the patent.

The information provided by you in this form will be subject to the following routine uses:

1. The information on this form will be treated confidentially to the extent allowed under the Freedom of Information Act (5 U.S.C. 552) and the Privacy Act (5 U.S.C 552a). Records from this system of records may be disclosed to the Department of Justice to determine whether disclosure of these records is required by the Freedom of Information Act.
2. A record from this system of records may be disclosed, as a routine use, in the course of presenting evidence to a court, magistrate, or administrative tribunal, including disclosures to opposing counsel in the course of settlement negotiations.
3. A record in this system of records may be disclosed, as a routine use, to a Member of Congress submitting a request involving an individual, to whom the record pertains, when the individual has requested assistance from the Member with respect to the subject matter of the record.
4. A record in this system of records may be disclosed, as a routine use, to a contractor of the Agency having need for the information in order to perform a contract. Recipients of information shall be required to comply with the requirements of the Privacy Act of 1974, as amended, pursuant to 5 U.S.C. 552a(m).
5. A record related to an International Application filed under the Patent Cooperation Treaty in this system of records may be disclosed, as a routine use, to the International Bureau of the World Intellectual Property Organization, pursuant to the Patent Cooperation Treaty.
6. A record in this system of records may be disclosed, as a routine use, to another federal agency for purposes of National Security review (35 U.S.C. 181) and for review pursuant to the Atomic Energy Act (42 U.S.C. 218(c)).
7. A record from this system of records may be disclosed, as a routine use, to the Administrator, General Services, or his/her designee, during an inspection of records conducted by GSA as part of that agency's responsibility to recommend improvements in records management practices and programs, under authority of 44 U.S.C. 2904 and 2906. Such disclosure shall be made in accordance with the GSA regulations governing inspection of records for this purpose, and any other relevant (*i.e.*, GSA or Commerce) directive. Such disclosure shall not be used to make determinations about individuals.
8. A record from this system of records may be disclosed, as a routine use, to the public after either publication of the application pursuant to 35 U.S.C. 122(b) or issuance of a patent pursuant to 35 U.S.C. 151. Further, a record may be disclosed, subject to the limitations of 37 CFR 1.14, as a routine use, to the public if the record was filed in an application which became abandoned or in which the proceedings were terminated and which application is referenced by either a published application, an application open to public inspection or an issued patent.
9. A record from this system of records may be disclosed, as a routine use, to a Federal, State, or local law enforcement agency, if the USPTO becomes aware of a violation or potential violation of law or regulation.

PART B - FEE(S) TRANSMITTAL

Complete and send this form, together with applicable fee(s), by mail or fax, or via EFS-Web.

By mail, send to: Mail Stop ISSUE FEE
Commissioner for Patents
P.O. Box 1450
Alexandria, Virginia 22313-1450

By fax, send to: (571)-273-2885

INSTRUCTIONS: This form should be used for transmitting the ISSUE FEE and PUBLICATION FEE (if required). Blocks 1 through 5 should be completed where appropriate. All further correspondence including the Patent, advance orders and notification of maintenance fees will be mailed to the current correspondence address as indicated unless corrected below or directed otherwise in Block 1, by (a) specifying a new correspondence address; and/or (b) indicating a separate "FEE ADDRESS" for maintenance fee notifications.

CURRENT CORRESPONDENCE ADDRESS (Note: Use Block 1 for any change of address)

25545 7590 03/08/2023
Lavery, De Billy, LLP
1 Place Ville Marie, Suite 4000
Montreal, QUEBEC H3B 4M4
CANADA

Note: A certificate of mailing can only be used for domestic mailings of the Fee(s) Transmittal. This certificate cannot be used for any other accompanying papers. Each additional paper, such as an assignment or formal drawing, must have its own certificate of mailing or transmission.

Certificate of Mailing or Transmission

I hereby certify that this Fee(s) Transmittal is being deposited with the United States Postal Service with sufficient postage for first class mail in an envelope addressed to the Mail Stop ISSUE FEE address above, or being transmitted to the USPTO via EFS-Web or by facsimile to (571) 273-2885, on the date below.

(Typed or printed name)
(Signature)
(Date)

APPLICATION NO.	FILING DATE	FIRST NAMED INVENTOR	ATTORNEY DOCKET NO.	CONFIRMATION NO.
17/929,566	09/02/2022	VINCENT PILON	G13569-00523-HM	3654

TITLE OF INVENTION: MODULAR FIBRE OPTIC CASSETTE, SYSTEM AND METHOD

APPLN. TYPE	ENTITY STATUS	ISSUE FEE DUE	PUBLICATION FEE DUE	PREV. PAID ISSUE FEE	TOTAL FEE(S) DUE	DATE DUE
nonprovisional	UNDISCOUNTED	$1200	$0.00	$0.00	$1200	06/08/2023

EXAMINER	ART UNIT	CLASS-SUBCLASS
PEACE, RHONDA S	2874	385-135000

1. Change of correspondence address or indication of "Fee Address" (37 CFR 1.363).

☑ Change of correspondence address (or Change of Correspondence Address form PTO/AIA/122 or PTO/SB/122) attached.

☐ "Fee Address" indication (or "Fee Address" Indication form PTO/AIA/47 or PTO/SB/47; Rev 03-02 or more recent) attached. **Use of a Customer Number is required.**

2. For printing on the patent front page, list
(1) The names of up to 3 registered patent attorneys or agents OR, alternatively,
(2) The name of a single firm (having as a member a registered attorney or agent) and the names of up to 2 registered patent attorneys or agents. If no name is listed, no name will be printed.

1 Lavery, de Billy, LLP
2 Hugh Mansfield
3

3. ASSIGNEE NAME AND RESIDENCE DATA TO BE PRINTED ON THE PATENT (print or type)

PLEASE NOTE: Unless an assignee is identified below, no assignee data will appear on the patent. If an assignee is identified below, the document must have been previously recorded, or filed for recordation, as set forth in 37 CFR 3.11 and 37 CFR 3.81(a). Completion of this form is NOT a substitute for filing an assignment.

(A) NAME OF ASSIGNEE (B) RESIDENCE: (CITY and STATE OR COUNTRY)

Please check the appropriate assignee category or categories (will not be printed on the patent) : ☐ Individual ☐ Corporation or other private group entity ☐ Government

4a. Fees submitted: ☑ Issue Fee ☐ Publication Fee (if required) ☐ Advance Order - # of Copies _____

4b. Method of Payment: *(Please first reapply any previously paid fee shown above)*

☑ Electronic Payment via EFS-Web ☐ Enclosed check ☐ Non-electronic payment by credit card (Attach form PTO-2038)

☐ The Director is hereby authorized to charge the required fee(s), any deficiency, or credit any overpayment to Deposit Account No. _____

5. **Change in Entity Status** (from status indicated above)

☐ Applicant certifying micro entity status. See 37 CFR 1.29

☐ Applicant asserting small entity status. See 37 CFR 1.27

☐ Applicant changing to regular undiscounted fee status.

NOTE: Absent a valid certification of Micro Entity Status (see forms PTO/SB/15A and 15B), issue fee payment in the micro entity amount will not be accepted at the risk of application abandonment.
NOTE: If the application was previously under micro entity status, checking this box will be taken to be a notification of loss of entitlement to micro entity status.
NOTE: Checking this box will be taken to be a notification of loss of entitlement to small or micro entity status, as applicable.

NOTE: This form must be signed in accordance with 37 CFR 1.31 and 1.33. See 37 CFR 1.4 for signature requirements and certifications.

Authorized Signature /HUGH MANSFIELD Reg.#55757/ Date 11 Apr 2023

Typed or printed name Hugh Mansfield Registration No. 55757

UNITED STATES
PATENT AND TRADEMARK OFFICE

P.O. Box 1450
Alexandria, VA 22313 - 1450
www.uspto.gov

ELECTRONIC PAYMENT RECEIPT

APPLICATION #	RECEIPT DATE / TIME	ATTORNEY DOCKET #
17/929,566	04/11/2023 11:31:19 AM ET	G13569-00523-HM

Title of Invention

MODULAR FIBRE OPTIC CASSETTE, SYSTEM AND METHOD

Application Information

APPLICATION TYPE	Utility - Nonprovisional Application under 35 USC 111(a)	PATENT #	-
CONFIRMATION #	3654	FILED BY	Hugh Mansfield
PATENT CENTER #	61899582	AUTHORIZED BY	-
CUSTOMER #	25545	FILING DATE	09/02/2022
CORRESPONDENCE ADDRESS	-	FIRST NAMED INVENTOR	VINCENT PILON

Payment Information

PAYMENT METHOD	PAYMENT TRANSACTION ID	PAYMENT AUTHORIZED BY
CARD / 1007	E20234AB38116766	Hugh Mansfield

FEE CODE	DESCRIPTION	ITEM PRICE($)	QUANTITY	ITEM TOTAL($)
1501	UTILITY ISSUE FEE	1200.00	1	1200.00
			TOTAL AMOUNT:	$1,200.00

This Acknowledgement Receipt evidences receipt on the noted date by the USPTO of the indicated documents, characterized by the applicant, and including page counts, where applicable. It serves as evidence of receipt similar to a Post Card, as described in MPEP 503.

New Applications Under 35 U.S.C. 111

If a new application is being filed and the application includes the necessary components for filing date (see 37 CFR 1.53(b)-(d) and MPEP 506), a Filing Receipt (37 CFR 1.54) will be issued in due course and the date shown on this Acknowledgement Receipt will establish the filing date of the application

National Stage of an International Application under 35 U.S.C. 371

If a timely submission to enter the national stage of an international application is compliant with the conditions of 35 U.S.C. 371 and other applicable requirements a Form PCT/DO/EO/903 indicating acceptance of the application as a national stage

submission under 35 U.S.C. 371 will be issued in addition to the Filing Receipt, in due course.

New International Application Filed with the USPTO as a Receiving Office

If a new international application is being filed and the international application includes the necessary components for an international filing date (see PCT Article 11 and MPEP 1810), a Notification of the International Application Number and of the International Filing Date (Form PCT/RO/105) will be issued in due course, subject to prescriptions concerning national security, and the date shown on this Acknowledgement Receipt will establish the international filing date of the application.

UNITED STATES
PATENT AND TRADEMARK OFFICE

P.O. Box 1450
Alexandria, VA 22313 - 1450
www.uspto.gov

ELECTRONIC ACKNOWLEDGEMENT RECEIPT

APPLICATION #	RECEIPT DATE / TIME	ATTORNEY DOCKET #
17/929,566	**04/11/2023 11:31:19 AM ET**	**G13569-00523-HM**

Title of Invention

MODULAR FIBRE OPTIC CASSETTE, SYSTEM AND METHOD

Application Information

APPLICATION TYPE	Utility - Nonprovisional Application under 35 USC 111(a)	PATENT #	-
CONFIRMATION #	3654	FILED BY	Hugh Mansfield
PATENT CENTER #	61899582	FILING DATE	09/02/2022
CUSTOMER #	25545	FIRST NAMED INVENTOR	VINCENT PILON
CORRESPONDENCE ADDRESS	-	AUTHORIZED BY	-

Documents

TOTAL DOCUMENTS: 2

DOCUMENT	PAGES	DESCRIPTION	SIZE (KB)
2501-USPTO-13569_523_Notice_of_Allowance_Due_Signed.pdf	1	Issue Fee Payment (PTO-85B)	149 KB
2501-USPTO-SB-47-004.pdf	2	Maintenance Fee Address Change	226 KB

Digest

DOCUMENT	MESSAGE DIGEST(SHA-512)
2501-USPTO-	E36CCF262E29B9916E9951E0E2B201098926C764D8E158E6F9

13569_523_Notice_of_Allowance_Due_Signed.pdf	212651BCB9B016BB28B4A59A6EF4B001FE0E3D47874BD49D023FAEB9588F7E0175C1FE432FC943
2501-USPTO-SB-47-004.pdf	C18E7BDA34DA8253C5C1293CE3F75316AD077D844DA497B1119A7DAFF94432457805940E29CA189F4920F3191A9D34544F26B4BCCEC2508E52C75A3CBCC56712

This Acknowledgement Receipt evidences receipt on the noted date by the USPTO of the indicated documents, characterized by the applicant, and including page counts, where applicable. It serves as evidence of receipt similar to a Post Card, as described in MPEP 503.

New Applications Under 35 U.S.C. 111

If a new application is being filed and the application includes the necessary components for filing date (see 37 CFR 1.53(b)-(d) and MPEP 506), a Filing Receipt (37 CFR 1.54) will be issued in due course and the date shown on this Acknowledgement Receipt will establish the filing date of the application

National Stage of an International Application under 35 U.S.C. 371

If a timely submission to enter the national stage of an international application is compliant with the conditions of 35 U.S.C. 371 and other applicable requirements a Form PCT/DO/EO/903 indicating acceptance of the application as a national stage submission under 35 U.S.C. 371 will be issued in addition to the Filing Receipt, in due course.

New International Application Filed with the USPTO as a Receiving Office

If a new international application is being filed and the international application includes the necessary components for an international filing date (see PCT Article 11 and MPEP 1810), a Notification of the International Application Number and of the International Filing Date (Form PCT/RO/105) will be issued in due course, subject to prescriptions concerning national security, and the date shown on this Acknowledgement Receipt will establish the international filing date of the application.

Receipt date: 09/02/2022

INFORMATION DISCLOSURE STATEMENT BY APPLICANT (Not for submission under 37 CFR 1.99)		
	Application Number	17/929,566 - GAU: 2874
	Filing Date	
	First Named Inventor	Vincent PILON
	Art Unit	
	Examiner Name	
	Attorney Docket Number	G13569-00523-HM

	3	20090290842	A1	2009-11-26	Bran de Leon et al.	
	4	20160033732	A1	2016-02-04	Giraud et al.	
	5	20160062050	A1	2016-03-03	Giraud et al.	
Change(s) applied to document /J.E.B./ 3/14/2023	6	20160062068	A1	03/2016	Giraud et al.	
	7	20190004268	A1	2019-01-03	Vogel	
	8	20190101717	A1	2019-04-04	Pilon	
	9	20190107682	A1	2019-04-11	Aramayo et al.	
	10	20190162924	A1	2019-05-30	Fontaine et al.	
	11	20190187394	A1	2019-06-20	Fontaine et al.	
	12	20200131730	A1	2020-04-30	Spiro	

If you wish to add additional U.S. Published Application citation information please click the Add button. Add

FOREIGN PATENT DOCUMENTS Remove

ALL REFERENCES CONSIDERED EXCEPT WHERE LINED THROUGH. /R.S.P./

EFS Web 2.1.18

/RHONDA S PEACE/ 03/02/2023

UNITED STATES PATENT AND TRADEMARK OFFICE

UNITED STATES DEPARTMENT OF COMMERCE
United States Patent and Trademark Office
Address: COMMISSIONER FOR PATENTS
P.O. Box 1450
Alexandria, Virginia 22313-1450
www.uspto.gov

APPLICATION NO.	ISSUE DATE	PATENT NO.	ATTORNEY DOCKET NO.	CONFIRMATION NO.
17/929,566	05/23/2023	11656422	G13569-00523-HM	3654

25545 7590 05/03/2023

Lavery, De Billy, LLP
1 Place Ville Marie, Suite 4000
Montreal, QUEBEC H3B 4M4
CANADA

ISSUE NOTIFICATION

The projected patent number and issue date are specified above. The patent will issue electronically. The electronically issued patent is the official patent grant pursuant to 35 U.S.C. § 153. The patent may be accessed on or after the issue date through Patent Center at https://patentcenter.uspto.gov/. The patent will be available in both the public and the private sides of Patent Center. Further assistance in electronically accessing the patent, or about Patent Center, is available by calling the Patent Electronic Business Center at 1-888-217-9197.

The USPTO is implementing electronic patent issuance with a transition period, during which period the USPTO will mail a ceremonial paper copy of the electronic patent grant to the correspondence address of record. Additional copies of the patent (i.e., certified and presentation copies) may be ordered for a fee from the USPTO's Certified Copy Center at https://certifiedcopycenter.uspto.gov/index.html. The Certified Copy Center may be reached at (800)972-6382.

Determination of Patent Term Adjustment under 35 U.S.C. 154 (b)
(application filed on or after May 29, 2000)

The Patent Term Adjustment is 0 day(s). Any patent to issue from the above-identified application will include an indication of the adjustment on the front page.

If a Continued Prosecution Application (CPA) was filed in the above-identified application, the filing date that determines Patent Term Adjustment is the filing date of the most recent CPA.

Applicant will be able to obtain more detailed information by accessing the Patent Application Information Retrieval (PAIR) WEB site (http://pair.uspto.gov).

Any questions regarding the Patent Term Extension or Adjustment determination should be directed to the Office of Patent Legal Administration at (571)-272-7702. Questions relating to issue and publication fee payments should be directed to the Application Assistance Unit (AAU) of the Office of Patents Stakeholder Experience (OPSE), Stakeholder Support Division (SSD) at (571)-272-4200.

IR103 (Rev. 10/09)

INVENTOR(s) (Please see PAIR WEB site http://pair.uspto.gov for additional inventors):

VINCENT PILON, LACHINE, CANADA;

APPLICANT(s) (Please see PAIR WEB site http://pair.uspto.gov for additional applicants):

BELDEN CANADA ULC, SAINT-LAURENT, CANADA;

The United States represents the largest, most dynamic marketplace in the world and is an unparalleled location for business investment, innovation, and commercialization of new technologies. The USA offers tremendous resources and advantages for those who invest and manufacture goods here. Through SelectUSA, our nation works to encourage and facilitate business investment. To learn more about why the USA is the best country in the world to develop technology, manufacture products, and grow your business, visit SelectUSA.gov.

UNITED STATES PATENT AND TRADEMARK OFFICE

UNITED STATES DEPARTMENT OF COMMERCE
United States Patent and Trademark Office
Address : COMMISSIONER FOR PATENTS
P.O. Box 1450
Alexandria, VA 22313-1450
www.uspto.gov

APPLICATION NO.	ISSUE DATE	PATENT NO.
17/929,566	23-MAY-23	11656422

Lavery, De Billy, LLP
1 Place Ville Marie, Suite 4000
Montreal, QC H3B 4M4

EGRANT NOTIFICATION

Your electronic patent grant (eGrant) is now available, which can be accessed via Patent Center at https://patentcenter.uspto.gov

The electronic patent grant is the official patent grant under 35 U.S.C. 153. For more information, please visit https://www.uspto.gov/electronicgrants