UNITED STATES PATENT AND TRADEMARK OFFICE

UNITED STATES DEPARTMENT OF COMMERCE
United States Patent and Trademark Office
Address: COMMISSIONER FOR PATENTS
P.O. Box 1450
Alexandria, Virginia 22313-1450
www.uspto.gov

APPLICATION NO.	FILING DATE	FIRST NAMED INVENTOR	ATTORNEY DOCKET NO.	CONFIRMATION NO.
18/328,431	06/02/2023	VINCENT PILON	0404.0016-CON4	5444

181721 7590 09/29/2024
MH2 - Belden Canada
1951 Kidwell Drive
Suite 310
Tysons Corner, VA 22182

EXAMINER
PEACE, RHONDA S

ART UNIT	PAPER NUMBER
2874	

NOTIFICATION DATE	DELIVERY MODE
09/29/2024	ELECTRONIC

Please find below and/or attached an Office communication concerning this application or proceeding.

The time period for reply, if any, is set in the attached communication.

Notice of the Office communication was sent electronically on above-indicated "Notification Date" to the following e-mail address(es):

docketing@mh2law.com
khood@mh2law.com

PTOL-90A (Rev. 04/07)

CommScope v. Belden
IPR2024-01228
CommScope Exhibit 1037

Office Action Summary	Application No. 18/328,431	Applicant(s) PILON, VINCENT	
	Examiner R. PEACE	Art Unit 2874	AIA (FITF) Status Yes

-- The MAILING DATE of this communication appears on the cover sheet with the correspondence address --

Period for Reply

A SHORTENED STATUTORY PERIOD FOR REPLY IS SET TO EXPIRE 3 MONTHS FROM THE MAILING DATE OF THIS COMMUNICATION.

- Extensions of time may be available under the provisions of 37 CFR 1.136(a). In no event, however, may a reply be timely filed after SIX (6) MONTHS from the mailing date of this communication.
- If NO period for reply is specified above, the maximum statutory period will apply and will expire SIX (6) MONTHS from the mailing date of this communication.
- Failure to reply within the set or extended period for reply will, by statute, cause the application to become ABANDONED (35 U.S.C. § 133). Any reply received by the Office later than three months after the mailing date of this communication, even if timely filed, may reduce any earned patent term adjustment. See 37 CFR 1.704(b).

Status

1)☑ Responsive to communication(s) filed on 8/5/24.

☐ A declaration(s)/affidavit(s) under **37 CFR 1.130(b)** was/were filed on _____.

2a)☐ This action is **FINAL.** 2b) ☑ This action is non-final.

3)☐ An election was made by the applicant in response to a restriction requirement set forth during the interview on _____; the restriction requirement and election have been incorporated into this action.

4)☐ Since this application is in condition for allowance except for formal matters, prosecution as to the merits is closed in accordance with the practice under *Ex parte Quayle*, 1935 C.D. 11, 453 O.G. 213.

Disposition of Claims*

5) ☑ Claim(s) 1-117 is/are pending in the application.

5a) Of the above claim(s) 21,55 and 109 is/are withdrawn from consideration.

6) ☐ Claim(s) _____ is/are allowed.

7) ☑ Claim(s) 1-20,22-54,56-108 and 110-117 is/are rejected.

8) ☐ Claim(s) _____ is/are objected to.

9) ☑ Claim(s) 1-117 are subject to restriction and/or election requirement

* If any claims have been determined allowable, you may be eligible to benefit from the **Patent Prosecution Highway** program at a participating intellectual property office for the corresponding application. For more information, please see http://www.uspto.gov/patents/init_events/pph/index.jsp or send an inquiry to **PPHfeedback@uspto.gov.**

Application Papers

10)☐ The specification is objected to by the Examiner.

11)☑ The drawing(s) filed on 6/2/23 is/are: a)☑ accepted or b)☐ objected to by the Examiner.

Applicant may not request that any objection to the drawing(s) be held in abeyance. See 37 CFR 1.85(a).

Replacement drawing sheet(s) including the correction is required if the drawing(s) is objected to. See 37 CFR 1.121(d).

Priority under 35 U.S.C. § 119

12)☐ Acknowledgment is made of a claim for foreign priority under 35 U.S.C. § 119(a)-(d) or (f).

Certified copies:

a)☐ All b)☐ Some** c)☐ None of the:

1.☐ Certified copies of the priority documents have been received.

2.☐ Certified copies of the priority documents have been received in Application No. _____.

3.☐ Copies of the certified copies of the priority documents have been received in this National Stage application from the International Bureau (PCT Rule 17.2(a)).

** See the attached detailed Office action for a list of the certified copies not received.

Attachment(s)

1) ☑ Notice of References Cited (PTO-892)

2) ☑ Information Disclosure Statement(s) (PTO/SB/08a and/or PTO/SB/08b) Paper No(s)/Mail Date 6/2/23 and 2/27/24.

3) ☐ Interview Summary (PTO-413) Paper No(s)/Mail Date _____.

4) ☐ Other: _____.

DETAILED ACTION

Notice of Pre-AIA or AIA Status

The present application, filed on or after March 16, 2013, is being examined under the first inventor to file provisions of the AIA.

Election/Restrictions

Applicant's election without traverse of claims 1-20, 22-54, 56-108, and 110-117 in the reply filed on 8/5/24 is acknowledged.

Information Disclosure Statement

The information disclosure statements (IDS) submitted on 6/2/23 and 2/27/24 were filed in compliance with the provisions of 37 CFR 1.97. Accordingly, the information disclosure statements are being considered by the examiner.

Claim Interpretation

The following is a quotation of 35 U.S.C. 112(f):

> (f) Element in Claim for a Combination. – An element in a claim for a combination may be expressed as a means or step for performing a specified function without the recital of structure, material, or acts in support thereof, and such claim shall be construed to cover the corresponding structure, material, or acts described in the specification and equivalents thereof.

The following is a quotation of pre-AIA 35 U.S.C. 112, sixth paragraph:

> An element in a claim for a combination may be expressed as a means or step for performing a specified function without the recital of structure, material, or acts in support thereof, and such claim shall be construed to cover the corresponding structure, material, or acts described in the specification and equivalents thereof.

This application includes one or more claim limitations that use the word "means" or "step" but are nonetheless not being interpreted under 35 U.S.C. 112(f) or pre-AIA 35 U.S.C. 112, sixth paragraph because the claim limitation(s) recite(s) sufficient structure, materials, or acts to entirely perform the recited function. Such claim limitation(s) is/are:

CommScope v. Belden
IPR2024-01228
CommScope Exhibit 1037

"tray means" and "modular fiber optic cassette means" in claims 1-2, 8-20, 22, 24-26, 41-44, 48, 49, 52-54, 56-59, 61-63, 65-67, 70, 73, 88, 90, 96-98, 102-103, 106-108, 110-113.

Because this/these claim limitation(s) is/are **not** being interpreted under 35 U.S.C. 112(f) or pre-AIA 35 U.S.C. 112, sixth paragraph, it/they is/are **not** being interpreted to cover only the corresponding structure, material, or acts described in the specification as performing the claimed function, and equivalents thereof.

If applicant intends to have this/these limitation(s) interpreted under 35 U.S.C. 112(f) or pre-AIA 35 U.S.C. 112, sixth paragraph, applicant may: (1) amend the claim limitation(s) to remove the structure, materials, or acts that performs the claimed function; or (2) present a sufficient showing that the claim limitation(s) does/do not recite sufficient structure, materials, or acts to perform the claimed function.

Claim Rejections - 35 USC § 112

The following is a quotation of 35 U.S.C. 112(b):
(b) CONCLUSION.—The specification shall conclude with one or more claims particularly pointing out and distinctly claiming the subject matter which the inventor or a joint inventor regards as the invention.

The following is a quotation of 35 U.S.C. 112 (pre-AIA), second paragraph:
The specification shall conclude with one or more claims particularly pointing out and distinctly claiming the subject matter which the applicant regards as his invention.

Claims 16-20 and 22 are rejected under 35 U.S.C. 112(b) or 35 U.S.C. 112 (pre-AIA), second paragraph, as being indefinite for failing to particularly point out and distinctly claim the subject matter which the inventor or a joint inventor (or for applications subject to pre-AIA 35 U.S.C. 112, the applicant), regards as the invention.

CommScope v. Belden
IPR2024-01228
CommScope Exhibit 1037

Claims 16-20 and 22 each recite "The tray of claim Error! Reference source not found," rendering the claims unclear. For purposes of examination, the limitation in question is replaced with the phrase "The tray of claim 1."

Claim Rejections - 35 USC § 102

In the event the determination of the status of the application as subject to AIA 35 U.S.C. 102 and 103 (or as subject to pre-AIA 35 U.S.C. 102 and 103) is incorrect, any correction of the statutory basis (i.e., changing from AIA to pre-AIA) for the rejection will not be considered a new ground of rejection if the prior art relied upon, and the rationale supporting the rejection, would be the same under either status.

The following is a quotation of the appropriate paragraphs of 35 U.S.C. 102 that form the basis for the rejections under this section made in this Office action:

> A person shall be entitled to a patent unless –
>
> (a)(2) the claimed invention was described in a patent issued under section 151, or in an application for patent published or deemed published under section 122(b), in which the patent or application, as the case may be, names another inventor and was effectively filed before the effective filing date of the claimed invention.

Claim(s) 1-20, 24-54, 58-108, and 112-117 is/are rejected under 35 U.S.C. 102(a)(2) as being anticipated by Fukui et al. (US 10,101,551 B2).

Re. Claim 1, Fukui et al. discloses a tray 30 for providing a plurality of different modular fiber optic cassette configurations in a standard U-space fiber management system (Fig. 9; col. 8 lines 16-32; col. 9 lines 30-35) comprising:

a tray means 30e having a first tray side end portion and a second tray side end portion defining a tray width portion of a standard U-space fiber management system, the tray width portion extending between the first tray side end portion and the second tray side end portion (Fig. 9; col. 8 lines 17-19 and 45-48);

CommScope v. Belden
IPR2024-01228
CommScope Exhibit 1037

wherein the tray width portion is configured to fit a standard U-space width dimension (col. 9 lines 30-35);

wherein the tray means is for fitting a plurality of different modular fiber optic cassettes configurations in the tray width portion of the standard U-space fiber management system (Figs. 6-9; col. 8 lines 17-19 and 45-48; col. 9 lines 30-35);

wherein each of the plurality of different modular fiber optic cassettes configurations include a modular fiber optic cassette means for supporting a receptacle module having a first module side end portion and a second module side end portion defining a module width portion (e.g., "module width portion" is measured along the x-direction of the cassette as seen in Figs. 1-5) extending between the first tray end portion and the second tray end portion (e.g., coupling multiple cassettes 10 creates larger cassettes 20; Figs. 1-5; col. 7 lines 61-67; col. 8 lines 1-3);

wherein the module width portion is configured to fit in a standard one width (1W) unit (Figs. 1-2; col. 5 lines 24-27);

wherein the modular fiber optic cassette means includes a first cassette side end portion and a second cassette side end portion defining a standard cassette width unit extending between the first cassette side end portion and the second cassette side end portion that comprises a standard two width (2W) unit 20 (Fig. 5; col. 7 lines 23-33), a standard three width (3W) unit (e.g., 36 cores with three integral units 10 each having three tiers; col. 7 line 67; col. 8 lines 1-6), a standard four width (4W) unit (e.g., 48 cores with three integral units 10 each having three tiers; col. 7 line 67; col. 8 lines 1-6) or a standard six width (6W) unit relative to the standard one width (1W) (e.g., tray member 10e is configured to receive up to twelve 1W units 10, resulting in inherent cassette

CommScope v. Belden
IPR2024-01228
CommScope Exhibit 1037

width units up to and including 12W, for example a 12W unit results when all of the units 10 across the tray are integrally formed; the prior art inherently discloses 6W units);

wherein the receptable module is configured to fit at least four fiber optic plug receiving receptacle portions 13 in the standard one width (1W) unit (Fig. 1; col. 5 lines 24-27);

wherein the plurality of different modular fiber optic cassette configurations that comprise:

a first modular fiber optic cassette configuration that includes six modular 2W cassettes that are each arranged side-by-side of each other along the tray member such that a cassette side end portion of each cassette of the first modular fiber optic cassette configuration adjacently faces a cassette side end portion of another modular cassette of the first modular fiber optic cassette configuration;

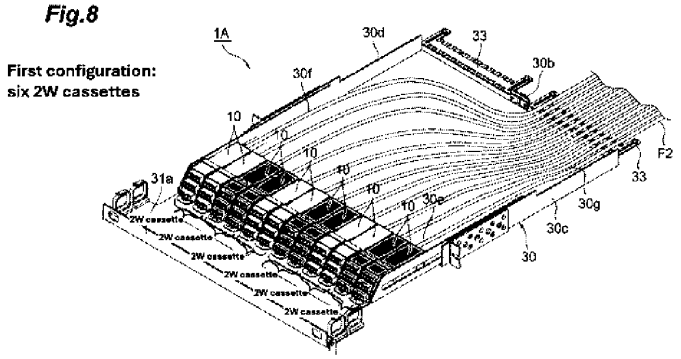

a second modular fiber optic cassette configuration that includes four modular 3W cassettes that are each arranged side-by- side of each other along the tray member such that a cassette side end portion of each cassette of the second modular fiber optic cassette configuration adjacently faces a cassette

CommScope v. Belden
IPR2024-01228
CommScope Exhibit 1037

side end portion of another modular cassette of the second modular fiber optic cassette configuration;

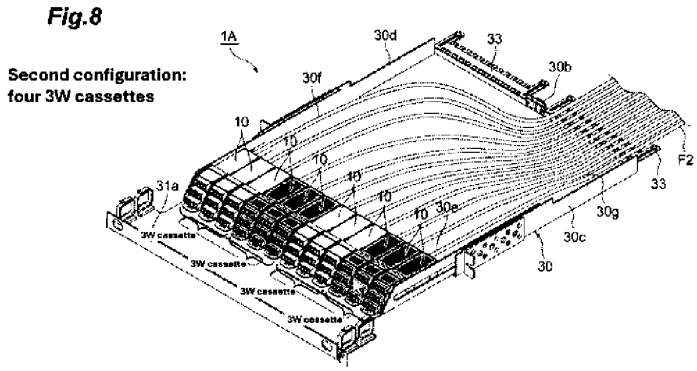

a third modular fiber optic cassette configuration that includes three modular 4W cassettes that are each arranged side-by-side of each other along the tray member such that a cassette side end portion of each cassette of the third modular fiber optic cassette configuration adjacently faces a cassette side end portion of another modular cassette of the third modular fiber optic cassette configuration;

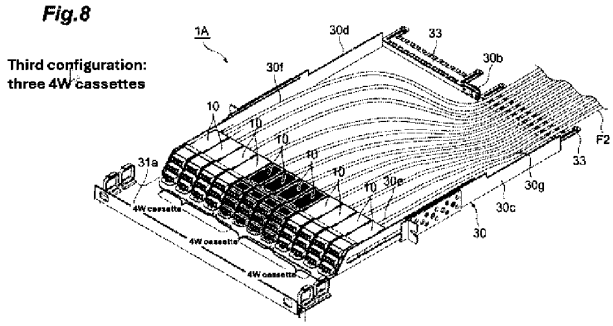

a fourth modular fiber optic cassette configuration that includes two modular 6W cassettes that are each arranged side-by-side of each other along the tray member such that a cassette side end portion of each cassette of the fourth modular fiber optic cassette configuration adjacently faces a cassette side

CommScope v. Belden
IPR2024-01228
CommScope Exhibit 1037

end portion of another modular cassette of the fourth modular fiber optic cassette configuration;

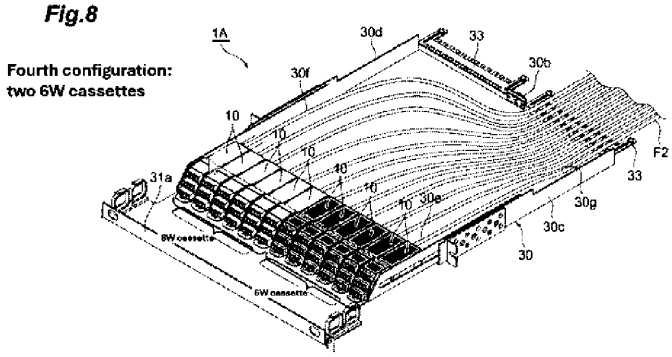

wherein each modular 2W standard width (2W) cassette is configured to fit two receptacle modules 10 (Figs. 1 and 5; col. 7 lines 23-33);

wherein each modular 3W standard width cassette is configured to fit three receptacle modules 10 (Figs. 1 and 5; col. 7 lines 65-67; col. 8 lines 1-3);

wherein modular 4W standard width cassette is configured to fit four receptacle modules 10 (Figs. 1 and 5; col. 7 lines 65-67; col. 8 lines 1-3);

wherein each modular 6W standard width cassette is configured to fit six receptacle modules 10 (Figs. 1 and 5; col. 7 lines 65-67; col. 8 lines 1-3);

wherein the tray means 30e is configured to be removeably secured to the modular fiber optic cassette means when they tray fits the plurality of different modular fiber optic cassette configurations within the tray width portion in the standard U-space system (Fig. 9; col. 8 lines 52-64; col. 9 lines 30-35).

wherein the tray means 30e includes a plurality of cassette engaging tray portions 33b that are configured to conform to the standard one width 1W so as to support the modular two standard width (2W) cassette, the modular three standard

CommScope v. Belden
IPR2024-01228
CommScope Exhibit 1037

width (3W) cassette, the modular fourth standard width (4W) cassette, and the modular six standard width (6W) cassette (Figs. 2 and 9; col. 8 lines 52-56).

Re. Claim 2, Fukui et al. discloses the tray means comprises a tray member 30e configured to fit a plurality of modular fiber optic cassettes when the plurality of modular fiber optic cassettes are arranged side-by-side along the tray member 30e in a standard U-space fiber management system (Figs. 6-9; col. 8 lines 17-19 and 45-48; col. 9 lines 30-35).

Re. Claim 3, Fukui et al. discloses the plurality of different modular fiber optic cassette configurations comprise a fifth modular fiber optic cassette configuration that includes three modular 2W standard width unit size cassettes, which are each arranged side-by-side of each other in a row along the tray such that a cassette side end portion of one of the three modular 2W standard width size cassettes adjacently faces a cassette side end portion of one of the other modular 2W standard width size cassette, and one modular 6W standard width unit size cassette that is arranged side-by- side in a row along the tray member with one of the three modular 2W standard width unit size cassettes, such that a cassette side end portion of the one modular 6W standard width unit size cassette adjacently faces a cassette side end portion of one of the other three modular 2W standard width unit size cassettes.

CommScope v. Belden
IPR2024-01228
CommScope Exhibit 1037

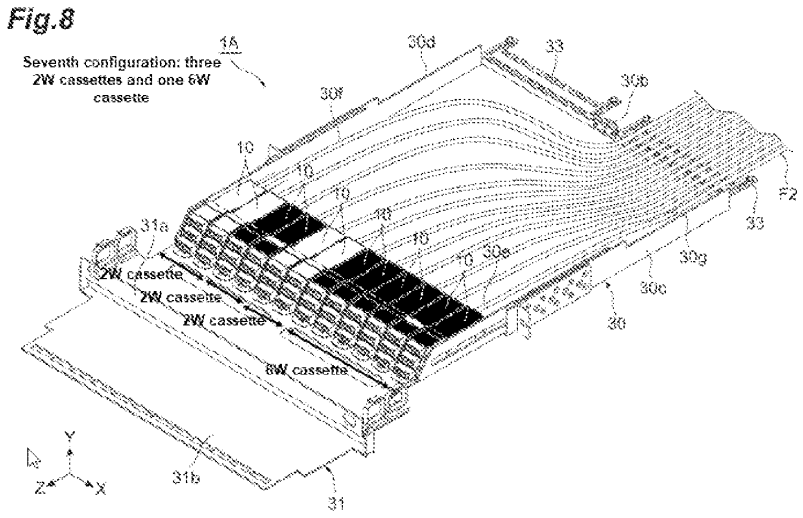

Re. Claim 4, Fukui et al. discloses the standard one width (1W) unit is based on a standard LC Quad width unit that is configured to fit four optical fiber connectors (e.g., "1W" is based on LC quad technology footprint, and thus "based on a standard SC Duplex width unit," since by industry standards the footprint of four (quad) LC connectors is designed to fit the footprint of dual SC connectors; col. 5 lines 24-36).

Re. Claim 5, Fukui et al. discloses the standard one width (1W) unit is based on a standard SC Duplex width unit that is configured to fit four optical fiber connectors (e.g., "1W" is based on LC quad technology footprint, and thus "based on a standard SC Duplex width unit," since by industry standards the footprint of four (quad) LC connectors is designed to fit the footprint of dual SC connectors; col. 5 lines 24-36).

Re. Claim 6, Fukui et al. discloses the standard one width (1W) unit is based on a standard SC Duplex width unit that is configured to fit a plurality of different type of LC, SC, and MPO connectors (e.g., "1W" is based on LC quad technology footprint, and thus "based on a standard SC Duplex width unit," since by industry standards the

CommScope v. Belden
IPR2024-01228
CommScope Exhibit 1037

footprint of four (quad) LC connectors is designed to fit the footprint of dual SC connectors; col. 5 lines 24-36).

Re. Claim 7, Fukui et al. discloses the plurality of cassette engaging portions 33b of the tray 30 are spaced apart from one another so as to conform to the standard one width (1W) and support the modular two standard width (2W) cassette, the modular three standard width (3W) cassette, the modular four standard width (4W) cassette, and the modular six standard width (6W) cassette (Fig. 9; col. 8 lines 52-56).

Re. Claim 8, Fukui et al. discloses the tray means 10e includes a cassette engaging shoulder (e.g., inside edge of hole 33a) that is configured to fit a channel portion (e.g., channel formed by hook 11i) of the modular cassette means (Figs. 2 and 9; col. 8 lines 52-56)

Re. Claim 9, Fukui et al. discloses the cassette engaging shoulder (e.g., inside edge of hole 33a) is located adjacent to a front end portion of the tray means 10e such that the tray means 10e is configured to support the modular cassette means at a front location of the tray means 10e (Fig. 9).

Re. Claim 10, Fukui et al. discloses the tray means 30e is configured to slidingly received in at least a portion of a tray receiving space of a case 30g/30c/30d of a fiber management system (Fig. 9; col. 8 lines 57-64).

Re. Claim 11, Fukui et al. discloses the modular fiber optic cassette means comprises a plurality of modular fiber optic cassette means that include a cassette side end portion 11a that is directly adjacent (e.g., lacking intervening structure) to a cassette side end portion 11a of another module fiber optic cassette means when each of the plurality of modular fiber optic cassettes means are in the plurality of the plurality of

CommScope v. Belden
IPR2024-01228
CommScope Exhibit 1037

different modular fiber optic cassette configurations (Figs 5-8; col. 5 lines 6-12; col. 6 lines 21-32).

Re. Claim 12, Fukui et al. discloses the modular fiber optic cassette means comprises a plurality of modular fiber optic cassette means that include a cassette side end portion 11a of one modular fiber optic cassette means that is adjacent to a cassette side end portion 11a of another module fiber optic cassette when each of the plurality of modular fiber optic cassette means are in the plurality of the plurality of different modular fiber optic cassette configurations (Figs 5-8; col. 5 lines 6-12; col. 6 lines 21-32).

Re. Claim 13, Fukui et al. discloses the modular fiber optic cassette means comprises a plurality of modular fiber optic cassette means that include a cassette side end portion 11a of one modular fiber optic cassette means that touches a cassette side end portion 11a of another module fiber optic cassette when each of the modular fiber optic cassettes means are in the plurality of the plurality of different modular fiber optic cassette configurations (Figs 5-8; col. 5 lines 6-12; col. 6 lines 21-32).

Re. Claim 14, Fukui et al. discloses the tray means has a tray width that is configured to receive at least twelve standard one width (1W) units side by side along a row (Figs 6-9).

Re. Claim 15, Fukui et al. discloses the tray means including first tray end portion, a second tray end portion spaced away from the first tray end portion so as to define a tray width extending between the first tray end portion and the second tray end portion, and wherein the tray width is configured to fit at least twelve standard one width (1W) units side by side along the tray means (Figs 6-9).

CommScope v. Belden
IPR2024-01228
CommScope Exhibit 1037

Re. Claim 16, Fukui et al. discloses the modular fiber optic cassette means comprise a multi-fiber connector receiving receptacle portion 12 arranged on a rear portion thereof and a plurality of optic fibers, one of the optic fibers being configured to interconnect a respective one of the optic plug receiving receptacle portions 12 with the multi- fiber connector receiving receptacle portion 13 (Fig. 4; col. 6 lines 33-48).

Re. Claim 17, Fukui et al. discloses the modular fiber optic cassette means comprises four fiber optic plug receiving receptacle portions 13 configured to be arranged side by side in a row along a front portion thereof for each standard width (1W) unit (Fig. 1; col. 5 lines 24-27).

Re. Claim 18, Fukui et al. discloses the tray means 10e is configured to be mounted in a rack (col. 9 lines 30-34).

Re. Claim 19, Fukui et al. discloses the tray means 10e is configured to be mounted in a standard U-space rack (col. 9 lines 30-34).

Re. Claim 20, Fukui et al. discloses the tray means 10e comprises a cassette fastening tray portion 33a that is configured to removably secure the tray 10e to the modular cassette means (Figs. 2 and 9; col. 8 lines 52-56).

Re. Claim 24, Fukui et al. discloses the tray means 10e includes a plurality of cassette engaging tray portions 33a that are each configured to engage a tray engaging cassette portion 11i of each modular fiber optic cassette 10 (Figs. 2 and 9; col. 8 lines 52-56).

Re. Claim 25, Fukui et al. discloses a tray 30 for providing a plurality of different modular fiber optic cassette configurations (Fig. 9; col. 8 lines 16-32; col. 9 lines 30-35) comprising:

CommScope v. Belden
IPR2024-01228
CommScope Exhibit 1037

a tray means 30e for fitting a plurality of different modular fiber optic cassette configurations in a standard U-space fiber management system (Figs. 6-9; col. 8 lines 17-19 and 45-48; col. 9 lines 30-35);

wherein each of the plurality of different sizes of modular fiber optic cassette configurations include a plurality of different sizes of modular fiber optic cassettes (1W, 2W, etc.);

wherein each of the plurality of different sizes of modular fiber optic cassettes is configured to support a fiber optic receptacle module 10 that is configured to fit in a standard one width (1W) unit (Figs. 1-2; col. 5 lines 24-27);

wherein the plurality of different sizes of modular fiber optic cassettes includes a standard two width (2W) cassette 20 that is configured to fit a standard two width (2W) unit relative to the standard one width (1W) unit (Fig. 5; col. 7 lines 23-33), a standard three width (3W) cassette that is configured to fit a standard three width (3W) unit relative to the standard one width (1W) unit (e.g., 36 cores with three integral units 10 each having three tiers; col. 7 line 67; col. 8 lines 1-6), a standard four width (4W) cassette that is configured to fit a standard four width (4W) unit relative to the standard one width (1W) unit (e.g., 48 cores with three integral units 10 each having three tiers; col. 7 line 67; col. 8 lines 1-6), and a standard six width (6W) cassette that is configured to fit a standard six width (6W) unit relative to the standard one width (1W) unit;

wherein the plurality of different modular fiber optic cassette configurations that comprise:

a first modular fiber optic cassette configuration that includes six modular 2W cassettes that are each arranged side-by-side of each other along the tray

CommScope v. Belden
IPR2024-01228
CommScope Exhibit 1037

member such that a cassette side end portion of each cassette of the first modular fiber optic cassette configuration adjacently faces a cassette side end portion of another modular cassette of the first modular fiber optic cassette configuration;

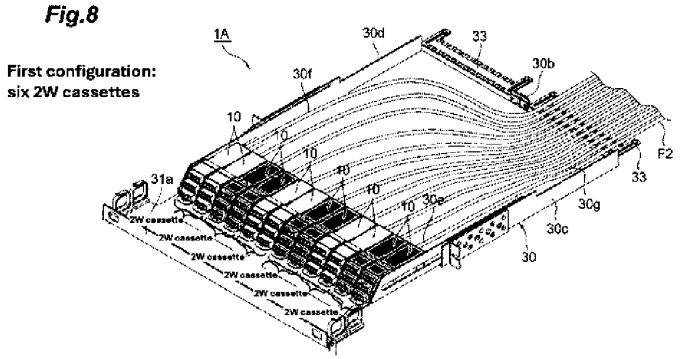

a second modular fiber optic cassette configuration that includes four modular 3W cassettes that are each arranged side-by- side of each other along the tray member such that a cassette side end portion of each cassette of the second modular fiber optic cassette configuration adjacently faces a cassette side end portion of another modular cassette of the second modular fiber optic cassette configuration;

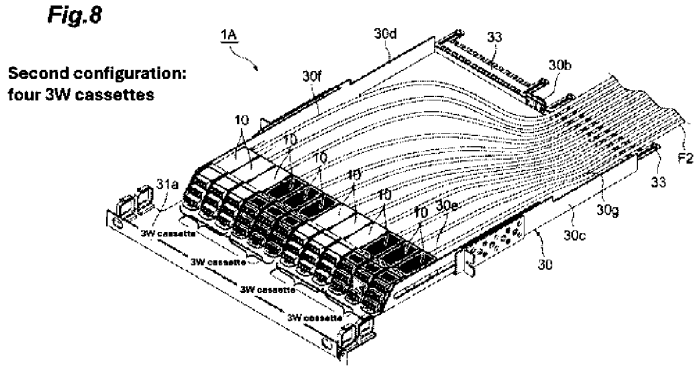

CommScope v. Belden
IPR2024-01228
CommScope Exhibit 1037

a third modular fiber optic cassette configuration that includes three modular 4W cassettes that are each arranged side-by-side of each other along the tray member such that a cassette side end portion of each cassette of the third modular fiber optic cassette configuration adjacently faces a cassette side end portion of another modular cassette of the third modular fiber optic cassette configuration;

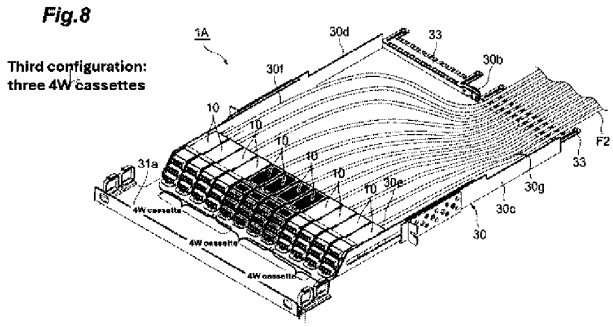

a fourth modular fiber optic cassette configuration that includes two modular 6W cassettes that are each arranged side-by-side of each other along the tray member such that a cassette side end portion of each cassette of the fourth modular fiber optic cassette configuration adjacently faces a cassette side end portion of another modular cassette of the fourth modular fiber optic cassette configuration;

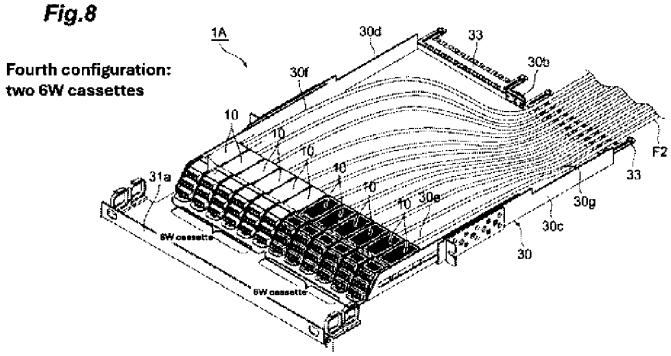

CommScope v. Belden
IPR2024-01228
CommScope Exhibit 1037

wherein the tray means 30e is configured to be removeably secured to the modular fiber optic cassette means when they tray fits the plurality of different modular fiber optic cassette configurations within the tray width portion in the standard U-space system (Fig. 9; col. 8 lines 52-64; col. 9 lines 30-35).

wherein the tray means 30e includes a plurality of cassette engaging tray portions 33b that are configured to conform to the standard one width 1W so as to support the modular two standard width (2W) cassette, the modular three standard width (3W) cassette, the modular fourth standard width (4W) cassette, and the modular six standard width (6W) cassette (Figs. 2 and 9; col. 8 lines 52-56).

Re. Claim 26, Fukui et al. discloses the tray means includes a first tray side end portion and a second tray side end portion defining a tray width portion extending between the first tray side end portion and the second tray side end portion, and where the tray width portion is configured to fit in a standard U-space width dimension (Figs. 6-9; col. 9 lines 30-34).

Re. Claim 27, Fukui et al. discloses the fiber optic receptable module 10 includes a first module side end portion and a second module side end portion defining a module width portion extending between the first try end portion and second tray end portion, and the module width portion is configured to fit in the standard one width (1 W) unit (Figs 5-8; col. 5 lines 6-12; col. 6 lines 21-32).

Re. Claim 28, Fukui et al. discloses the modular 2W standard width unit size cassette includes a first 2W cassette side end portion 11d and a second 2W cassette side end portion 11c configured to define a 2W standard cassette width unit that

CommScope v. Belden
IPR2024-01228
CommScope Exhibit 1037

extends between the first 2W cassette side end portion 11d and the second 2W cassette side end portion 11c that is configured to fit the standard two width (2W) unit (Fig. 5; col. 7 lines 23-33).

Re. Claim 29, Fukui et al. discloses the modular 3W standard width unit size cassette includes a first 3W cassette side end portion and a second 3W cassette side end portion defining a 3W standard cassette width unit extending between the first 3W cassette side end portion and the second 3W cassette side end portion that is configured to fit the standard three width (3W) unit (Figs. 1 and 5; col. 7 lines 65-67; col. 8 lines 1-3).

Re. Claim 30, Fukui et al. discloses the modular 4W standard width unit size cassette includes a first 4W cassette side end portion and a second 4W cassette side end portion defining a 4W standard cassette width unit extending between the first 4W cassette side end portion and the second 4W cassette side end portion that is configured to fit the standard four width (4W) unit (Figs. 1 and 5; col. 7 lines 65-67; col. 8 lines 1-3).

Re. Claim 31, Fukui et al. discloses the modular 6W standard width unit size cassette includes a first 6W cassette side end portion and a second 6W cassette side end portion defining a 6W standard cassette width unit extending between the first 6W cassette side end portion and the second 6W cassette side end portion that is configured to fit the standard six width (6W) unit (Figs. 1 and 5; col. 7 lines 65-67; col. 8 lines 1-3).

CommScope v. Belden
IPR2024-01228
CommScope Exhibit 1037

Re. Claim 32, Fukui et al. discloses the modular 2W standard width unit size cassette is configured to fit two receptacle modules 10 (Figs. 1 and 5; col. 7 lines 23-33).

Re. Claim 33, Fukui et al. discloses the modular 3W standard width unit size cassette is configured to fit three receptacle modules 10 (Figs. 1 and 5; col. 7 lines 65-67; col. 8 lines 1-3).

Re. Claim 34, Fukui et al. discloses the modular 4W standard width unit size cassette is configured to fit four receptacle modules 10 (Figs. 1 and 5; col. 7 lines 65-67; col. 8 lines 1-3).

Re. Claim 35, Fukui et al. discloses modular 6W standard width unit size cassette is configured to fit six receptacle modules 10 (Figs. 1 and 5; col. 7 lines 65-67; col. 8 lines 1-3).

Re. Claim 36, Fukui et al. discloses the fiber optic receptable module 10 is configured to fit at least four fiber optic plug receiving receptacle portions 13 (Fig. 1; col. 5 lines 24-27).

Re. Claim 37, Fukui et al. discloses the fiber optic receptable module that is configured to fit at least four fiber optic plug receiving receptacle portions 13 in the standard one width (1W) unit (Fig. 1; col. 5 lines 24-27).

Re. Claim 38, Fukui et al. discloses the standard one width (1W) unit is based on a standard LC Quad width unit that is configured to fit four optical fiber connectors (e.g., "1W" is based on LC quad technology footprint, and thus "based on a standard SC Duplex width unit," since by industry standards the footprint of four (quad) LC connectors is designed to fit the footprint of dual SC connectors; col. 5 lines 24-36).

CommScope v. Belden
IPR2024-01228
CommScope Exhibit 1037

Re. Claim 39, Fukui et al. discloses the standard one width (1W) unit is based on a standard SC Duplex width unit that is configured to fit four optical fiber connectors (e.g., "1W" is based on LC quad technology footprint, and thus "based on a standard SC Duplex width unit," since by industry standards the footprint of four (quad) LC connectors is designed to fit the footprint of dual SC connectors; col. 5 lines 24-36).

Re. Claim 40, Fukui et al. discloses the standard one width (1W) unit is based on a standard SC Duplex width unit that is configured to fit a plurality of different type of LC, SC, and MPO connectors (e.g., "1W" is based on LC quad technology footprint, and thus "based on a standard SC Duplex width unit," since by industry standards the footprint of four (quad) LC connectors is designed to fit the footprint of dual SC connectors; col. 5 lines 24-36).

Re. Claim 41, Fukui et al. discloses the plurality of cassette engaging portions 33b of the tray means 30e are spaced apart from one another so as to conform to the standard one width (1W) and support the modular 2W standard width unit size cassette, the modular 3W standard width unit size cassette, the modular 4W standard width unit size cassette, and the modular 6W standard width unit size cassette (Fig. 9; col. 8 lines 52-56).

Re. Claim 42, Fukui et al. discloses the tray means 10e includes a cassette engaging shoulder (e.g., inside edge of hole 33a) that is configured to fit a channel portion (e.g., channel formed by hook 11i) of each of the plurality of modular fiber optic cassettes (Figs. 2 and 9; col. 8 lines 52-56).

Re. Claim 43, Fukui et al. discloses the cassette engaging shoulder (e.g., inside edge of hole 33a) is located adjacent to a front end portion of the tray means 10e such

CommScope v. Belden
IPR2024-01228
CommScope Exhibit 1037

that the tray member 10e is configured to support each of the modular fiber optic cassettes at a front location of the tray (Fig. 9).

Re. Claim 44, Fukui et al. discloses the tray means 30e is configured to slidingly received in at least a portion of a tray receiving space of a case 30g/30c/30d of a fiber management system (Fig. 9; col. 8 lines 57-64).

Re. Claim 45, Fukui et al. discloses each of the modular fiber optic cassettes include a cassette side end portion 11a that is directly adjacent (e.g., lacking intervening structure) to a cassette side end portion 11a of another module fiber optic cassette when the modular fiber optic cassettes means are in the plurality of the plurality of different modular fiber optic cassette configurations (Figs 5-8; col. 5 lines 6-12; col. 6 lines 21-32).

Re. Claim 46, Fukui et al. discloses each of the modular fiber optic cassettes include a cassette side end portion 11a of one modular fiber optic cassette that is adjacent to a cassette side end portion 11a of another module fiber optic cassette when each of the plurality of modular fiber optic cassettes are in the plurality of the plurality of different modular fiber optic cassette configurations (Figs 5-8; col. 5 lines 6-12; col. 6 lines 21-32).

Re. Claim 47, Fukui et al. discloses each of the modular fiber optic cassettes include a cassette side end portion 11a of one modular fiber optic cassette that is configured to touch a cassette side end portion 11a of another module fiber optic cassette when each of the modular fiber optic cassettes are in the plurality of the plurality of different modular fiber optic cassette configurations (Figs 5-8; col. 5 lines 6-12; col. 6 lines 21-32).

CommScope v. Belden
IPR2024-01228
CommScope Exhibit 1037

Re. Claim 48, Fukui et al. discloses the tray means has a tray width that is configured to receive at least twelve standard one width (1W) units side by side along a row (Figs 6-9).

Re. Claim 49, Fukui et al. discloses the tray means has a first tray end portion, a second tray end portion that is spaced away from the first tray end portion so as to define a tray width extending between the first tray end portion and the second tray end portion, and wherein the tray width is configured to support at least twelve standard one width (1W) units side by side along the tray means (Figs 6-9).

Re. Claim 50, Fukui et al. discloses each modular fiber optic cassette comprises a multi-fiber connector receiving receptacle portion 12 arranged on a rear portion thereof and a plurality of optic fibers, one of the optic fibers being configured to interconnect a respective one of the optic plug receiving receptacle portions 12 with the multi- fiber connector receiving receptacle portion 13 (Fig. 4; col. 6 lines 33-48).

Re. Claim 51, Fukui et al. discloses each modular fiber optic cassette comprises four fiber optic plug receiving receptacle portions 13 configured to be arranged side by side in a row along a front portion thereof for each standard width (1W) unit (Fig. 1; col. 5 lines 24-27).

Re. Claim 52, Fukui et al. discloses the tray means 10e is configured to be mounted in a rack (col. 9 lines 30-34).

Re. Claim 53, Fukui et al. discloses the tray means 10e is configured to be mounted in a standard U-space rack (col. 9 lines 30-34).

CommScope v. Belden
IPR2024-01228
CommScope Exhibit 1037

Re. Claim 54, Fukui et al. discloses the tray means 10e comprises a cassette fastening tray portion 33a that is configured to removably secure the tray 10e to the modular cassette means (Figs. 2 and 9; col. 8 lines 52-56).

Re. Claim 58, Fukui et al. discloses the tray means 30e includes a plurality of cassette engaging tray portions 33b that are each configured to engage a tray engaging cassette portion 11j of each modular fiber optic cassette (Figs. 2 and 9; col. 8 lines 52-56).

Re. Claim 59, Fukui et al. discloses the tray means comprises a tray member 30e configured to fit in the standard U-space and support the plurality of different modular fiber optic cassettes configurations in the standard U-space (Figs. 6-9; col. 8 lines 17-19 and 45-48; col. 9 lines 30-35).

Re. Claim 60, Fukui et al. discloses the plurality of different modular fiber optic cassette configurations comprise a fifth modular fiber optic cassette configuration that includes three modular 2W standard width unit size cassettes, which are each arranged side-by-side of each other in a row along the tray such that a cassette side end portion of one of the three modular 2W standard width size cassettes adjacently faces a cassette side end portion of one of the other modular 2W standard width size cassette, and one modular 6W standard width unit size cassette that is arranged side-by- side in a row along the tray member with one of the three modular 2W standard width unit size cassettes, such that a cassette side end portion of the one modular 6W standard width unit size cassette adjacently faces a cassette side end portion of one of the other three modular 2W standard width unit size cassettes.

CommScope v. Belden
IPR2024-01228
CommScope Exhibit 1037

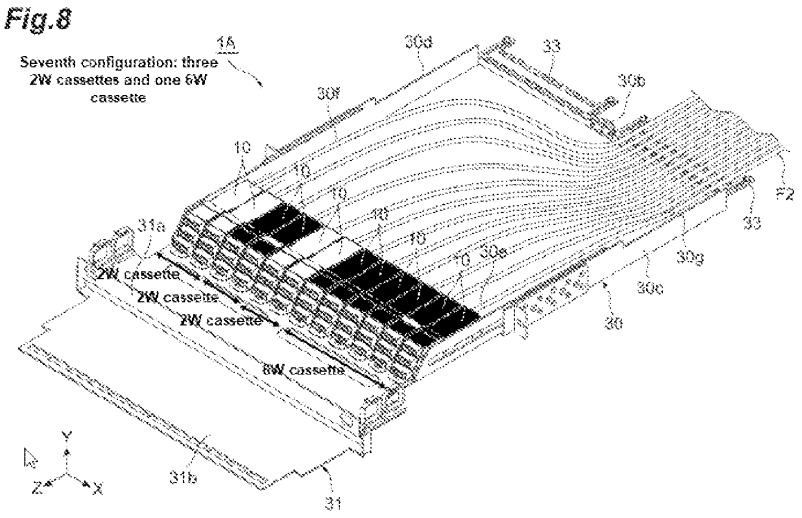

Re. Claim 61, Fukui et al. discloses a tray 30 for providing a plurality of different modular fiber optic cassette configurations in a standard U-space (Fig. 9; col. 8 lines 16-32; col. 9 lines 30-35) comprising:

a tray means 30e for supporting a plurality of different modular fiber optic cassette configurations (Figs. 6-9; col. 8 lines 17-19 and 45-48; col. 9 lines 30-35);

wherein each of the plurality of different sizes of modular fiber optic cassette configurations include different sizes of modular fiber optic cassettes (1W, 2W, etc.);

wherein each of the different sizes of modular fiber optic cassettes is configured to support a fiber optic receptacle module 10 that is configured to fit in a standard one width (1W) unit (Figs. 1-2; col. 5 lines 24-27);

wherein the plurality of different sizes of modular fiber optic cassettes includes a standard two width (2W) cassette 20 that is configured to fit a standard two width (2W) unit relative to the standard one width (1W) unit (Fig. 5; col. 7 lines 23-33), a standard three width (3W) cassette that is configured to fit a standard three width (3W) unit

CommScope v. Belden
IPR2024-01228
CommScope Exhibit 1037

relative to the standard one width (1W) unit (e.g., 36 cores with three integral units 10 each having three tiers; col. 7 line 67; col. 8 lines 1-6), a standard four width (4W) cassette that is configured to fit a standard four width (4W) unit relative to the standard one width (1W) unit (e.g., 48 cores with three integral units 10 each having three tiers; col. 7 line 67; col. 8 lines 1-6), and a standard six width (6W) cassette that is configured to fit a standard six width (6W) unit relative to the standard one width (1W) unit;

wherein the plurality of different modular fiber optic cassette configurations that comprise:

a first modular fiber optic cassette configuration that includes six modular 2W cassettes that are each arranged side-by-side of each other along the tray means such that a cassette side end portion of each cassette of the first modular fiber optic cassette configuration adjacently faces a cassette side end portion of another modular cassette of the first modular fiber optic cassette configuration;

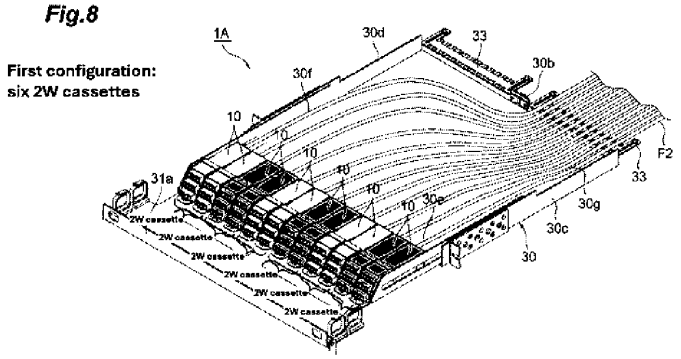

a second modular fiber optic cassette configuration that includes four modular 3W cassettes that are each arranged side-by- side of each other along the tray means such that a cassette side end portion of each cassette of the second modular fiber optic cassette configuration adjacently faces a cassette

CommScope v. Belden
IPR2024-01228
CommScope Exhibit 1037

side end portion of another modular cassette of the second modular fiber optic cassette configuration;

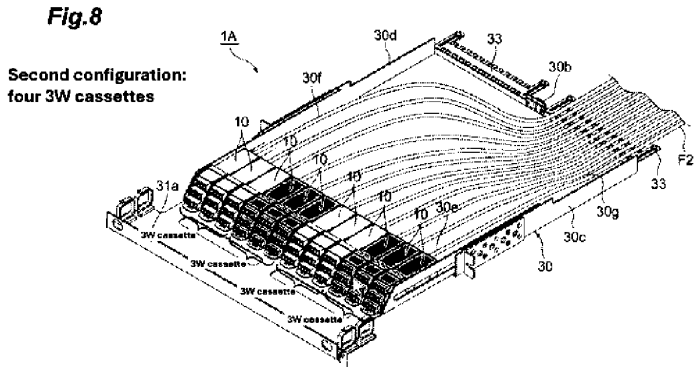

a third modular fiber optic cassette configuration that includes three modular 4W cassettes that are each arranged side-by-side of each other along the tray means such that a cassette side end portion of each cassette of the third modular fiber optic cassette configuration adjacently faces a cassette side end portion of another modular cassette of the third modular fiber optic cassette configuration;

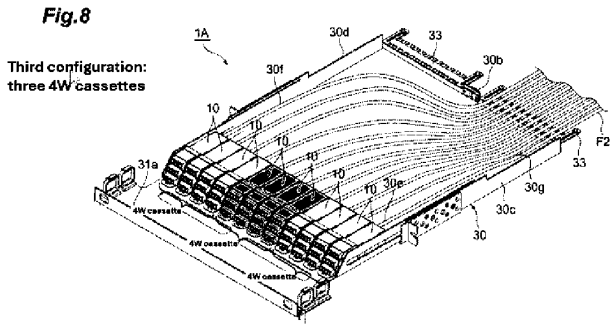

a fourth modular fiber optic cassette configuration that includes two modular 6W cassettes that are each arranged side-by-side of each other along the tray means such that a cassette side end portion of each cassette of the fourth modular fiber optic cassette configuration adjacently faces a cassette side

CommScope v. Belden
IPR2024-01228
CommScope Exhibit 1037

end portion of another modular cassette of the fourth modular fiber optic cassette configuration;

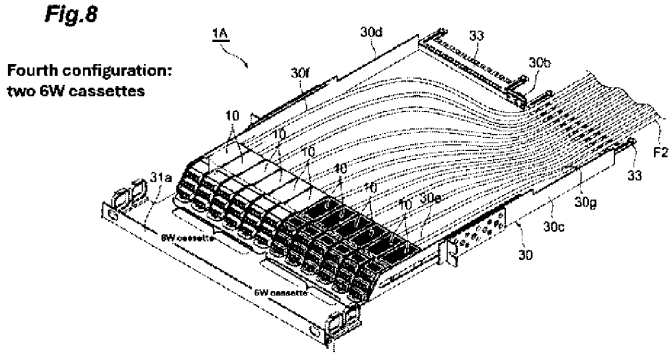

wherein the tray means 30e is configured to be removeably secured to the modular fiber optic cassette means when they tray fits the plurality of different modular fiber optic cassette configurations within the tray width portion in the standard U-space system (Fig. 9; col. 8 lines 52-64; col. 9 lines 30-35).

wherein the tray means 30e is configured to conform to the standard one width 1W so as to support the modular two standard width (2W) cassette, the modular three standard width (3W) cassette, the modular fourth standard width (4W) cassette, and the modular six standard width (6W) cassette (Figs. 2 and 9; col. 8 lines 52-56).

Re. Claim 62, Fukui et al. discloses the tray means 10e is configured to be mounted in a standard U-space width (col. 9 lines 30-35).

Re. Claim 63, Fukui et al. discloses the tray means 10e comprises a tray member that is configured to fit a plurality of different modular fiber optic cassette configurations in a standard U-space width (Figs. 6-9; col. 8 lines 17-19 and 45-48; col. 9 lines 30-35).

CommScope v. Belden
IPR2024-01228
CommScope Exhibit 1037

Re. Claim 64, Fukui et al. discloses each of the plurality of different modular fiber optic cassette configurations include a plurality of different sizes (e.g., 1W, 2W, etc.) of modular fiber optic cassettes (Figs. 6-9; col. 8 lines 17-19 and 45-48; col. 9 lines 30-35).

Re. Claim 65, Fukui et al. discloses the plurality of different modular fiber optic cassette configurations comprise a fifth modular fiber optic cassette configuration that includes three modular 2W standard width unit size cassettes, which are each arranged side-by-side of each other in a row along the tray means such that a cassette side end portion of one of the three modular 2W standard width size cassettes adjacently faces a cassette side end portion of one of the other modular 2W standard width size cassette, and one modular 6W standard width unit size cassette that is arranged side-by- side in a row along the tray means with one of the three modular 2W standard width unit size cassettes, such that a cassette side end portion of the one modular 6W standard width unit size cassette adjacently faces a cassette side end portion of one of the other three modular 2W standard width unit size cassettes.

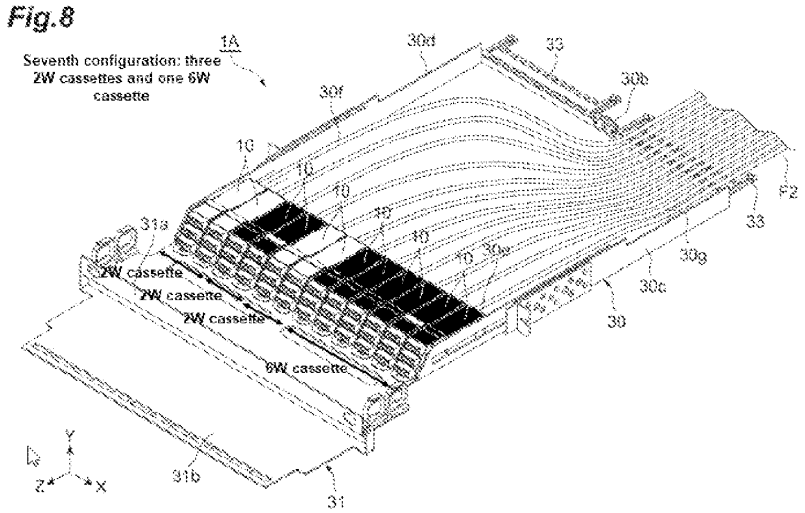

CommScope v. Belden
IPR2024-01228
CommScope Exhibit 1037

Re. Claim 66, Fukui et al. discloses the tray means comprises a tray member 30e that is configured to be removeably secured to each modular fiber optic cassette when the tray member supports the plurality of different modular fiber optic cassettes configurations within a tray member width portion in the standard U-space fiber management system (Figs. 6-9; col. 8 lines 17-19 and 45-48; col. 9 lines 30-35).

Re. Claim 67, Fukui et al. discloses the tray means 30e includes a plurality of selectively cassette engaging tray portions 33b that are configured to conform to the standard one width 1W so as to support the modular two standard width (2W) cassette, the modular three standard width (3W) cassette, the modular fourth standard width (4W) cassette, and the modular six standard width (6W) cassette (Figs. 2 and 9; col. 8 lines 52-56).

Re. Claim 68, Fukui et al. discloses the plurality of selectively engaging cassette engaging portions comprises a plurality of slot portions 33b that are each configured to releasably engage with a tab portion 11j of the modular 2W standard width unit size cassette, the modular 3W standard width unit size cassette, the modular 4W standard width unit size cassette, and the modular 6W standard width unit size cassette (Figs. 2 and 9; col. 8 lines 52-56).

Re. Claim 69, Fukui et al. discloses the plurality of slot portions 33b include at least two slot portions that are configured to releaseably engage with at least two corresponding tab portions 11j of each of the modular 2W standard width unit size cassette, the modular 3W standard width unit size cassette, the modular 4W standard width unit size cassette, and the modular 6W standard width unit size cassette (e.g., 2W

CommScope v. Belden
IPR2024-01228
CommScope Exhibit 1037

cassette will comprises two tab portions 11j; 3W cassette will comprise three tab portions 11j, etc.; Figs. 2, 5, and 9; col. 8 lines 52-56).

Re. Claim 70, Fukui et al. discloses the tray means includes a plurality of selectively engaging cassette engaging portions 33b that are spaced apart from one another so as to be configured to conform to the standard one width (1W) and support the modular 2W standard width unit size cassette, the modular 3W standard width unit size cassette, the modular 4W standard width unit size cassette, and the modular 6W standard width unit size cassette (Figs. 2 and 9; col. 8 lines 52-56).

Re. Claim 71, Fukui et al. discloses the plurality of selectively engaging cassette engaging portions comprises a plurality of slot portions 33b that are each configured to releasably engage with a tab portion 11j of each of the modular 2W standard width unit size cassette, the modular 3W standard width unit size cassette, the modular 4W standard width unit size cassette, and the modular 6W standard width unit size cassette (e.g., 2W cassette will comprises two tab portions 11j; 3W cassette will comprise three tab portions 11j, etc.; Figs. 2, 5, and 9; col. 8 lines 52-56).

Re. Claim 72, Fukui et al. discloses the plurality of slot portions 33b include at least two slot portions that are configured to releaseably engage with at least two corresponding tab portions 11j of each of the modular 2W standard width unit size cassette, the modular 3W standard width unit size cassette, the modular 4W standard width unit size cassette, and the modular 6W standard width unit size cassette (e.g., 2W cassette will comprises two tab portions 11j; 3W cassette will comprise three tab portions 11j, etc.; Figs. 2, 5, and 9; col. 8 lines 52-56).

CommScope v. Belden
IPR2024-01228
CommScope Exhibit 1037

Re. Claim 73, Fukui et al. discloses the tray means comprises a tray member 30e that includes a first tray member side end portion and a second tray member side end portion defining a tray member width portion extending between the first tray member side end portion and the second tray member side end portion, and where the tray member width portion is configured to fit in a standard U- space width dimension (Fig. 9; col. 8 lines 17-19 and 45-48).

Re. Claim 74, Fukui et al. discloses the fiber optic receptable module 10 includes a first module side end portion and a second module side end portion defining a module width portion extending between the first tray end portion and second tray member end portion, and the module width portion is configured to fit in the standard one width (1 W) unit (Figs 5-8; col. 5 lines 6-12; col. 6 lines 21-32).

Re. Claim 75, Fukui et al. discloses the modular 2W standard width unit size cassette includes a first 2W cassette side end portion 11d and a second 2W cassette side end portion 11c configured to define a 2W standard cassette width unit that extends between the first 2W cassette side end portion 11d and the second 2W cassette side end portion 11c that is configured to fit the standard two width (2W) unit (Fig. 5; col. 7 lines 23-33).

Re. Claim 76, Fukui et al. discloses the modular 3W standard width unit size cassette includes a first 3W cassette side end portion and a second 3W cassette side end portion defining a 3W standard cassette width unit extending between the first 3W cassette side end portion and the second 3W cassette side end portion that is configured to fit the standard three width (3W) unit (Figs. 1 and 5; col. 7 lines 65-67; col. 8 lines 1-3).

CommScope v. Belden
IPR2024-01228
CommScope Exhibit 1037

Re. Claim 77, Fukui et al. discloses the modular 4W standard width unit size cassette includes a first 4W cassette side end portion and a second 4W cassette side end portion defining a 4W standard cassette width unit extending between the first 4W cassette side end portion and the second 4W cassette side end portion that is configured to fit the standard four width (4W) unit (Figs. 1 and 5; col. 7 lines 65-67; col. 8 lines 1-3).

Re. Claim 78, Fukui et al. discloses the modular 6W standard width unit size cassette includes a first 6W cassette side end portion and a second 6W cassette side end portion defining a 6W standard cassette width unit extending between the first 6W cassette side end portion and the second 6W cassette side end portion that is configured to fit the standard six width (6W) unit (Figs. 1 and 5; col. 7 lines 65-67; col. 8 lines 1-3).

Re. Claim 79, Fukui et al. discloses the modular 2W standard width unit size cassette is configured to fit two receptacle modules 10 (Figs. 1 and 5; col. 7 lines 23-33).

Re. Claim 80, Fukui et al. discloses the modular 3W standard width unit size cassette is configured to fit three receptacle modules 10 (Figs. 1 and 5; col. 7 lines 65-67; col. 8 lines 1-3).

Re. Claim 81, Fukui et al. discloses the modular 4W standard width unit size cassette is configured to fit four receptacle modules 10 (Figs. 1 and 5; col. 7 lines 65-67; col. 8 lines 1-3).

CommScope v. Belden
IPR2024-01228
CommScope Exhibit 1037

Re. Claim 82, Fukui et al. discloses modular 6W standard width unit size cassette is configured to fit six receptacle modules 10 (Figs. 1 and 5; col. 7 lines 65-67; col. 8 lines 1-3).

Re. Claim 83, Fukui et al. discloses the fiber optic receptable module 10 is configured to fit at least four fiber optic plug receiving receptacle portions 13 (Fig. 1; col. 5 lines 24-27).

Re. Claim 84, Fukui et al. discloses the fiber optic receptable module that is configured to fit at least four fiber optic plug receiving receptacle portions 13 in the standard one width (1W) unit (Fig. 1; col. 5 lines 24-27).

Re. Claim 85, Fukui et al. discloses the standard one width (1W) unit is based on a standard LC Quad width unit that is configured to fit four optical fiber connectors (e.g., "1W" is based on LC quad technology footprint, and thus "based on a standard SC Duplex width unit," since by industry standards the footprint of four (quad) LC connectors is designed to fit the footprint of dual SC connectors; col. 5 lines 24-36).

Re. Claim 86, Fukui et al. discloses the standard one width (1W) unit is based on a standard SC Duplex width unit that is configured to fit four optical fiber connectors (e.g., "1W" is based on LC quad technology footprint, and thus "based on a standard SC Duplex width unit," since by industry standards the footprint of four (quad) LC connectors is designed to fit the footprint of dual SC connectors; col. 5 lines 24-36).

Re. Claim 87, Fukui et al. discloses the standard one width (1W) unit is based on a standard SC Duplex width unit that is configured to fit a plurality of different type of LC, SC, and MPO connectors (e.g., "1W" is based on LC quad technology footprint, and thus "based on a standard SC Duplex width unit," since by industry standards the

CommScope v. Belden
IPR2024-01228
CommScope Exhibit 1037

footprint of four (quad) LC connectors is designed to fit the footprint of dual SC connectors; col. 5 lines 24-36).

Re. Claim 88, Fukui et al. discloses the tray means comprises a row of cassette engaging portions 33 of the tray means 30e are spaced apart from one another so as to conform to the standard one width (1W) and support the modular 2W standard width unit size cassette, the modular 3W standard width unit size cassette, the modular 4W standard width unit size cassette, and the modular 6W standard width unit size cassette (Fig. 9; col. 8 lines 52-56).

Re. Claim 89, Fukui et al. discloses the row of cassette engaging portions 33 comprises a row of slot portions that are each spaced apart from one another (Fig. 9; col. 8 lines 52-56).

Re. Claim 90, Fukui et al. discloses the row of cassette engaging portions 33 comprises a first row of cassette engaging portions 33b, and the tray means includes a second row of cassette engaging portion 33a that is spaced away from the first row of cassette engaging portions 33b (Fig. 9; col. 8 lines 52-56).

Re. Claim 91, Fukui et al. discloses the first row of cassette engaging portion 33b comprises a first row of slot portions that are each configured to engage a tab portion 11j of each modular cassette (Figs. 2 and 9; col. 8 lines 52-56).

Re. Claim 92, Fukui et al. discloses the row of cassette engaging portions 33 comprises a front row of cassette engaging portions 33a, and the tray includes a rear row of cassette engaging portion 33b that is spaced away from the front row of cassette engaging portions 33a (Fig. 9; col. 8 lines 52-56).

CommScope v. Belden
IPR2024-01228
CommScope Exhibit 1037

Re. Claim 93, Fukui et al. discloses the front row of cassette engaging portion comprises 33a a front row of slot portions that are each configured to engage a tab portion 11i of each modular cassette (Figs. 2 and 9; col. 8 lines 52-56).

Re. Claim 94, Fukui et al. discloses the rear row of cassette engaging portion 33b comprises a rear row of aperture portions that are each configured to engage a moveable tab portion 11j (e.g., flexible hook) of each modular cassette that is configured to move between a first position, where the tab portion is configured to prevent each modular cassette from being released from the tray member, and a second position, where the tab portion is configured to permit each modular cassette to be released from the tray member (Figs. 2 and 9; col. 8 lines 52-56).

Re. Claim 95, Fukui et al. discloses the moveable tab portion 11j includes a boss portion that is configured to engage a corresponding aperture portion of the rear row of cassette engaging portion when the moveable tab portion is in the first position (Fig. 2; col. 8 lines 52-56).

Re. Claim 96, Fukui et al. discloses the tray means 10e includes a cassette engaging shoulder (e.g., inside edge of hole 33a) that is configured to fit a channel portion (e.g., channel formed by hook 11i) of each of the plurality of modular fiber optic cassettes (Figs. 2 and 9; col. 8 lines 52-56).

Re. Claim 97, Fukui et al. discloses the cassette engaging shoulder (e.g., inside edge of hole 33a) is located adjacent to a front end portion of the tray means 10e such that the tray member 10e is configured to support each of the modular fiber optic cassettes at a front location of the tray means (Fig. 9).

CommScope v. Belden
IPR2024-01228
CommScope Exhibit 1037

Re. Claim 98, Fukui et al. discloses the tray means 30e is configured to slidingly received in at least a portion of a tray member receiving space of a case 30g/30c/30d of a fiber management system (Fig. 9; col. 8 lines 57-64).

Re. Claim 99, Fukui et al. discloses each of the modular fiber optic cassettes include a cassette side end portion 11a that is directly adjacent (e.g., lacking intervening structure) to a cassette side end portion 11a of another module fiber optic cassette when the modular fiber optic cassettes means are in the plurality of the plurality of different modular fiber optic cassette configurations (Figs 5-8; col. 5 lines 6-12; col. 6 lines 21-32).

Re. Claim 100, Fukui et al. discloses each of the modular fiber optic cassettes include a cassette side end portion 11a of one modular fiber optic cassette that is adjacent to a cassette side end portion 11a of another module fiber optic cassette when each of the plurality of modular fiber optic cassettes are in the plurality of the plurality of different modular fiber optic cassette configurations (Figs 5-8; col. 5 lines 6-12; col. 6 lines 21-32).

Re. Claim 101, Fukui et al. discloses each of the modular fiber optic cassettes include a cassette side end portion 11a of one modular fiber optic cassette that touches a cassette side end portion 11a of another module fiber optic cassette when each of the modular fiber optic cassettes are in the plurality of the plurality of different modular fiber optic cassette configurations (Figs 5-8; col. 5 lines 6-12; col. 6 lines 21-32).

Re. Claim 102, Fukui et al. discloses the tray means has a tray member width that is configured to support at least twelve standard one width (1W) units side by side along a row (Figs 6-9).

CommScope v. Belden
IPR2024-01228
CommScope Exhibit 1037

Re. Claim 103, Fukui et al. discloses the tray means has a first tray member end portion, a second tray member end portion that is spaced away from the first tray member end portion so as to define a tray member width extending between the first tray end member portion and the second tray end member portion, and wherein the tray member width is configured to support at least twelve standard one width (1W) units side by side along the tray member (Figs 6-9).

Re. Claim 104, Fukui et al. discloses each modular fiber optic cassette comprises a multi-fiber connector receiving receptacle portion 12 arranged on a rear portion thereof and a plurality of optic fibers, one of the optic fibers being configured to interconnect a respective one of the optic plug receiving receptacle portions 12 with the multi- fiber connector receiving receptacle portion 13 (Fig. 4; col. 6 lines 33-48).

Re. Claim 105, Fukui et al. discloses each modular fiber optic cassette comprises four fiber optic plug receiving receptacle portions 13 configured to be arranged side by side in a row along a front portion thereof for each standard width (1W) unit (Fig. 1; col. 5 lines 24-27).

Re. Claim 106, Fukui et al. discloses the tray means 10e is configured to be mounted in a rack (col. 9 lines 30-34).

Re. Claim 107, Fukui et al. discloses the tray means 10e is configured to be mounted in a standard U-space rack (col. 9 lines 30-34).

Re. Claim 108, Fukui et al. discloses the tray means 10e comprises a cassette fastening tray portion 33a that is configured to removably secure the tray 10e to the modular cassette means (Figs. 2 and 9; col. 8 lines 52-56).

CommScope v. Belden
IPR2024-01228
CommScope Exhibit 1037

Re. Claim 108, Fukui et al. discloses the tray means 10e comprises a cassette fastening portion 33 that is configured to removably secure the tray means to each modular fiber optic cassette (Figs. 2 and 9; col. 8 lines 52-56).

Re. Claim 112, Fukui et al. discloses the tray means comprises a tray member that is configured to support the plurality of different modular fiber optic cassette configurations in a standard U-space width (Fig. 9; col. 8 lines 16-32; col. 9 lines 30-35).

Re. Claim 113, Fukui et al. discloses a tray 30 for providing a plurality of different modular fiber optic cassette configurations in a standard U-space (Fig. 9; col. 8 lines 16-32; col. 9 lines 30-35) comprising:

a tray means 30e for supporting a plurality of different modular fiber optic cassette configurations (Figs. 6-9; col. 8 lines 17-19 and 45-48; col. 9 lines 30-35);

wherein each of the plurality of different sizes of modular fiber optic cassette configurations include different sizes of modular fiber optic cassettes (1W, 2W, etc.);

wherein each of the different sizes of modular fiber optic cassettes is configured to support a fiber optic receptacle module 10 that is configured to fit in a standard one width (1W) unit (Figs. 1-2; col. 5 lines 24-27);

wherein the plurality of different sizes of modular fiber optic cassettes includes a standard two width (2W) cassette 20 that is configured to fit a standard two width (2W) unit relative to the standard one width (1W) unit (Fig. 5; col. 7 lines 23-33), a standard three width (3W) cassette that is configured to fit a standard three width (3W) unit relative to the standard one width (1W) unit (e.g., 36 cores with three integral units 10 each having three tiers; col. 7 line 67; col. 8 lines 1-6), a standard four width (4W) cassette that is configured to fit a standard four width (4W) unit relative to the standard

CommScope v. Belden
IPR2024-01228
CommScope Exhibit 1037

one width (1W) unit (e.g., 48 cores with three integral units 10 each having three tiers; col. 7 line 67; col. 8 lines 1-6), and a standard six width (6W) cassette that is configured to fit a standard six width (6W) unit relative to the standard one width (1W) unit.

Re. Claim 114, Fukui et al. discloses the plurality of different modular fiber optic cassette configurations includes a first modular fiber optic cassette configuration that includes six modular 2W standard width unit size cassettes that are each arranged side-by-side of each other along the tray member such that a cassette side end portion of each modular 2W standard width unit size cassette adjacently faces a cassette side end portion of at least one other modular 2W standard width size cassette.

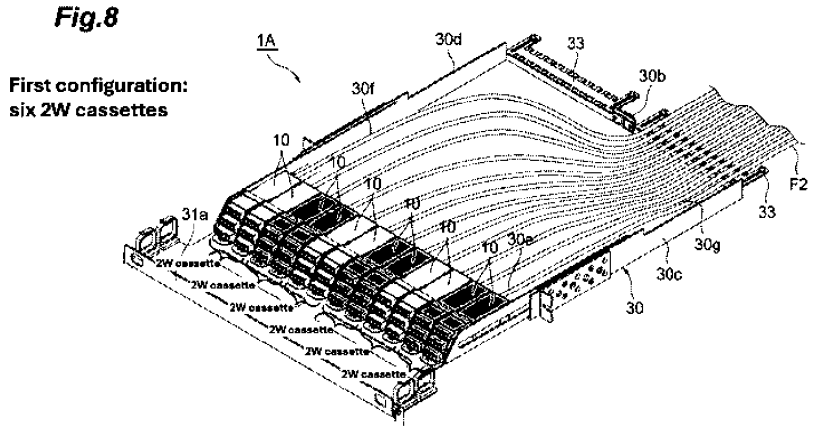

Re. Claim 115, Fukui et al. discloses the plurality of different modular fiber optic cassette configurations includes a second modular fiber optic cassette configuration that includes four modular 3W standard width unit size cassettes that are each arranged side-by-side of each other in a row along the tray member such that a cassette side end portion of each modular 3W standard width size cassette adjacently faces a cassette side end portion of at least one other modular 3W standard width size cassette.

CommScope v. Belden
IPR2024-01228
CommScope Exhibit 1037

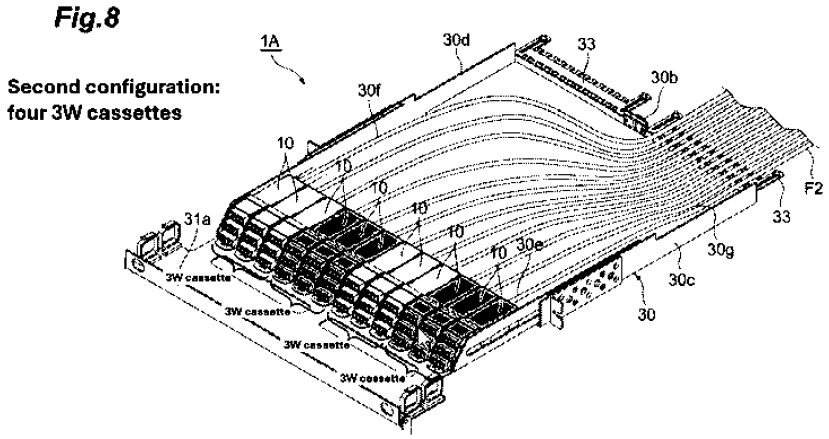

Re. Claim 116, Fukui et al. discloses the plurality of different modular fiber optic cassette configurations includes a third modular fiber optic cassette configuration that includes three modular 4W standard width unit size cassettes that are each arranged side-by-side of each other in a row along the tray member such that a cassette side end portion of each modular 4W standard width unit size cassette adjacently faces a cassette side end portion of at least one other modular 4W standard width unit size cassette.

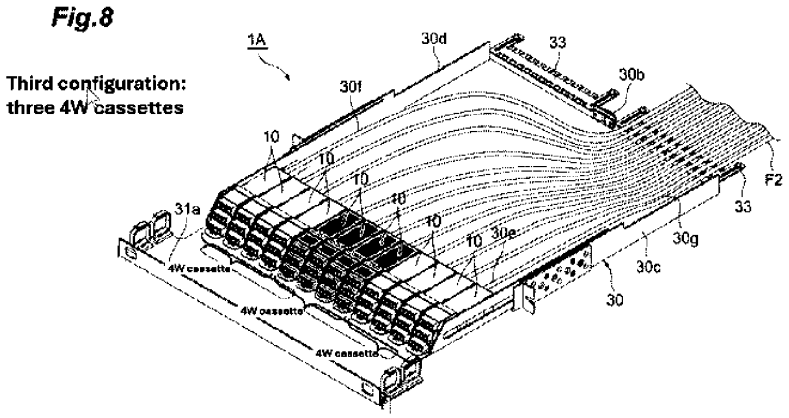

Re. Claim 117, Fukui et al. discloses the plurality of different modular fiber optic cassette configurations includes a fourth modular fiber optic cassette configuration that

CommScope v. Belden
IPR2024-01228
CommScope Exhibit 1037

includes two modular 6W standard width unit size cassettes that are each arranged side-by-side of each other in a row along the tray member such that a cassette side end portion of one of the two modular 6W standard width unit size cassettes adjacently faces a cassette side end portion of the other modular 6W standard width unit size cassette.

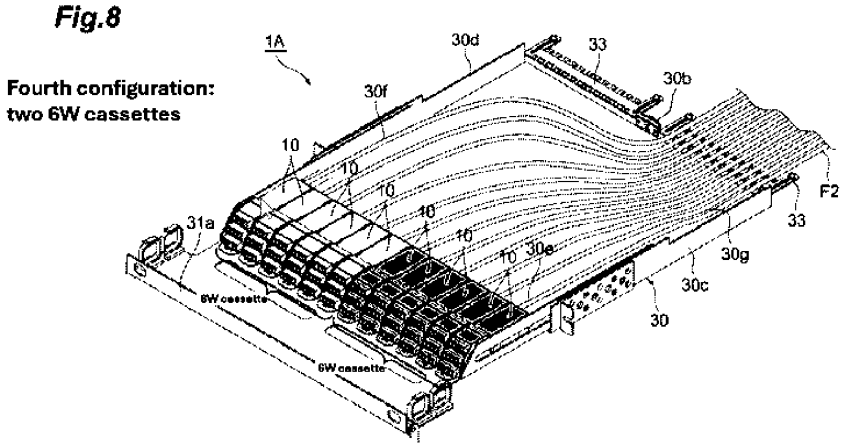

Claim Rejections - 35 USC § 103

In the event the determination of the status of the application as subject to AIA 35 U.S.C. 102 and 103 (or as subject to pre-AIA 35 U.S.C. 102 and 103) is incorrect, any correction of the statutory basis (i.e., changing from AIA to pre-AIA) for the rejection will not be considered a new ground of rejection if the prior art relied upon, and the rationale supporting the rejection, would be the same under either status.

The following is a quotation of 35 U.S.C. 103 which forms the basis for all obviousness rejections set forth in this Office action:

> A patent for a claimed invention may not be obtained, notwithstanding that the claimed invention is not identically disclosed as set forth in section 102, if the differences between the claimed invention and the prior art are such that the claimed invention as a whole would have been obvious before the effective filing date of the claimed invention to a person having

CommScope v. Belden
IPR2024-01228
CommScope Exhibit 1037

ordinary skill in the art to which the claimed invention pertains. Patentability shall not be negated by the manner in which the invention was made.

The factual inquiries for establishing a background for determining obviousness under 35 U.S.C. 103 are summarized as follows:

1. Determining the scope and contents of the prior art.

2. Ascertaining the differences between the prior art and the claims at issue.

3. Resolving the level of ordinary skill in the pertinent art.

4. Considering objective evidence present in the application indicating obviousness or nonobviousness.

Claim(s) 22, 23, 56, 57, 110, 111 is/are rejected under 35 U.S.C. 103 as being unpatentable over Fukui et al. (US 10,101,551 B2) and Murray et al. (US 2016/0231525 A1).

Re. Claims 22, 23, 56, 57, 110, and 111, Fukui et al. discloses the tray as discussed above, but fails to disclose an arrangement wherein the tray means is configured to be removable secured to *an elongate cable management bracket that includes a bracket width that fits in the standard one width (1W) unit*, wherein *the elongate cable management bracket includes a cable management loop that is configured to be positioned in front of and to a side of an optic plug receiving receptacle portion of a modular cassette when the cable management loop is removably secured to the tray*.

Murray et al. discloses a tray member (Figs. 1, 93, 94) is configured to be removably secured to an elongate cable management bracket 870 that includes a cable management loop that is configured to be positioned in front of and to a side of an optic plug receiving receptacle portion of a modular cassette 160 when the cable

CommScope v. Belden
IPR2024-01228
CommScope Exhibit 1037

management loop is removably secured to the tray member (Figs. 93-95; [0197], [0199]).

The claimed arrangement would have been obvious to one of ordinary skill in the art before the effective filing date of the current invention, since the same provides cable management and organization to the arrangement, thereby making the arrangement accessible for later management (Murray et al.: [0002]).

Murray et al. does not explicitly disclose forming the bracket width to fit the standard one width (1W) unit, but the same would have been obvious to one of ordinary skill in the art before the claimed invention was effectively filed, since it has been held that where the general conditions of a claim are disclosed in the prior art, discovering the optimum or workable ranges involves only routine skill in the art. *In re Aller*, 105 USPQ 233.

Conclusion

The prior art made of record and not relied upon is considered pertinent to applicant's disclosure. See the attached PTO-892.

Any inquiry concerning this communication or earlier communications from the examiner should be directed to R. PEACE whose telephone number is (571)272-8580. The examiner can normally be reached 9-5 pm.

Examiner interviews are available via telephone, in-person, and video conferencing using a USPTO supplied web-based collaboration tool. To schedule an interview, applicant is encouraged to use the USPTO Automated Interview Request (AIR) at http://www.uspto.gov/interviewpractice.

CommScope v. Belden
IPR2024-01228
CommScope Exhibit 1037

If attempts to reach the examiner by telephone are unsuccessful, the examiner's supervisor, Uyen-Chau Le can be reached on (571) 272-2397. The fax phone number for the organization where this application or proceeding is assigned is 571-273-8300.

Information regarding the status of published or unpublished applications may be obtained from Patent Center. Unpublished application information in Patent Center is available to registered users. To file and manage patent submissions in Patent Center, visit: https://patentcenter.uspto.gov. Visit https://www.uspto.gov/patents/apply/patent-center for more information about Patent Center and https://www.uspto.gov/patents/docx for information about filing in DOCX format. For additional questions, contact the Electronic Business Center (EBC) at 866-217-9197 (toll-free). If you would like assistance from a USPTO Customer Service Representative, call 800-786-9199 (IN USA OR CANADA) or 571-272-1000.

/RHONDA S PEACE/
Primary Examiner, Art Unit 2874
9/27/24

CommScope v. Belden
IPR2024-01228
CommScope Exhibit 1037

Claims

1. A tray for providing a plurality of different modular fiber optic cassette configurations in a standard U-space fiber optic management system comprising:

a tray means having a first tray side end portion and a second tray side end portion defining a tray width portion of a standard U-space fiber management system, the tray width portion extending between the first tray side end portion and the second tray side end portion;

wherein the tray width portion is configured to fit a standard U-space width dimension;

wherein the tray means is for fitting a plurality of different modular fiber optic cassette configurations in the tray width portion of the standard U-space fiber management system;

wherein each of the plurality of different modular fiber optic cassette configurations include a modular fiber optic cassette means for supporting a receptable module having a first module side end portion and a second module side end portion defining a module width portion extending between the first tray end portion and second tray end portion;

wherein the module width portion is configured to fit in a standard one width (1W) unit;

wherein the modular fiber optic cassette means includes a first cassette side end portion and a second cassette side end portion defining a standard cassette width unit extending between the first cassette side end portion and the second cassette side end portion that comprises a standard two width (2W) unit, a standard three width (3W) unit, a standard four width (4W) unit, or a standard a standard six width (6W) unit relative to the standard one width (1W) unit;

wherein the receptable module is configured to fit at least four fiber optic plug receiving receptacle portions in a standard one width (1W) unit;

CommScope v. Belden
IPR2024-01228
CommScope Exhibit 1037

wherein the plurality of different modular fiber optic cassette configurations comprise:

a first modular fiber optic cassette configuration that includes six modular two standard width unit (2W) cassettes that are each arranged side by side of each other along the tray such that a cassette side end portion of each modular two standard width (2W) cassette adjacently faces a cassette side end portion of at least one other modular two standard width (2W) cassette;

a second modular fiber optic cassette configuration that includes four modular three standard width unit (3W) cassettes that are each arranged side by side of each other in a row along the tray such that a cassette side end portion of each modular three standard width (3W) cassette adjacently faces a cassette side end portion of at least one other modular three standard width (3W) cassette;

a third modular fiber optic cassette configuration that includes three modular four standard width unit (4W) cassettes that are each arranged side by side of each other in a row along the tray such that a cassette side end portion of each modular four standard width (4W) cassette adjacently faces a cassette side end portion of at least one other modular four standard width (4W) cassette; and

a fourth modular fiber optic cassette configuration that includes two modular six standard width unit (6W) cassettes that are each arranged side by side of each other in a row along the tray such that a cassette side end portion of one of the two modular six standard width (6W) cassettes adjacently faces a cassette side end portion of the other modular six standard width (6W) cassette;

wherein each modular two standard width (2W) cassette is configured to fit two receptacle modules;

wherein each modular three standard width (3W) cassette is configured to fit three receptacle modules;

CommScope v. Belden
IPR2024-01228
CommScope Exhibit 1037

wherein each modular four standard width (4W) cassette is configured to fit four receptacle modules;

wherein each modular six standard width (6W) cassette is configured to fit six receptacle modules;

wherein the tray means is configured to be removable secured to the modular fiber optic cassette means when the tray fits the plurality of different modular fiber optic cassette configurations within the tray width portion in the standard U-space fiber management system; and

wherein the tray means includes a plurality of cassette engaging portions that are configured to conform to the standard one width (1W) so as to support the modular two standard width (2W) cassette, the modular three standard width (3W) cassette, the modular four standard width (4W) cassette, and the modular six standard width (6W) cassette.

2. The tray of claim 1, wherein the tray means comprises a tray member that is configured to fit the plurality of different modular fiber optic cassette configurations in the tray width portion of the standard U-space fiber management system.

3. The tray of claim 1, wherein the plurality of different modular fiber optic cassette configurations further comprise a fifth modular fiber optic cassette configuration that includes three modular two standard width unit (2W) cassettes, which are each arranged side by side of each other in a row along the tray such that a cassette side end portion of one of the three modular two standard width (2W) cassettes adjacently faces a cassette side end portion of one of the other modular two standard width (2W) cassette, and one modular six standard width unit (6W) cassette that is arranged side by side in a row along the tray with one of the three modular two standard width unit (2W) cassettes, such that a cassette side end portion of the one modular six standard width unit (6W) cassette adjacently faces a cassette side end

CommScope v. Belden
IPR2024-01228
CommScope Exhibit 1037

portion of one of the other three modular two standard width unit (2W) cassettes.

4. The tray of claim 1, wherein the standard one width (1W) unit is based on a standard LC Quad width unit that is configured to fit four optical fiber connectors.

5. The tray of claim 1, wherein the standard one width (1W) unit is based on a standard SC Duplex width unit that is configured to fit four optical fiber connectors.

6. The tray of claim 1, wherein the standard one width (1W) unit is based on a standard SC Duplex width unit that is configured to fit an plurality of different type of LC, SC, and MPO connectors.

7. The tray of claim 1, wherein the plurality of cassette engaging portions of the tray are spaced apart from one another so as to conform to the standard one width (1W) and support the modular two standard width (2W) cassette, the modular three standard width (3W) cassette, the modular four standard width (4W) cassette, and the modular six standard width (6W) cassette.

8. The tray of claim 1, wherein the tray means includes a cassette engaging shoulder that is configured to fit a channel portion of the modular cassette means.

9. The tray of claim 8, wherein the cassette engaging shoulder is located adjacent to a front end portion of the tray means such that the tray means is configured to support the modular cassette means at a front location of the tray means.

CommScope v. Belden
IPR2024-01228
CommScope Exhibit 1037

10. The tray of claim 1, wherein the tray means is configured to be slideably received in at least portion of a tray receiving space of a case of a fiber optic management system.

11. The tray of claim 1, wherein the modular fiber optic cassette means comprises a plurality of modular fiber optic cassette means that include a cassette side end portion that is directly adjacent to a cassette side end portion of another module fiber optic cassette means when each of the plurality of modular fiber optic cassettes means are in the plurality of the plurality of different modular fiber optic cassette configurations.

12. The tray of claim 1, wherein the modular fiber optic cassette means comprises a plurality of modular fiber optic cassette means that include a cassette side end portion of one modular fiber optic cassette means that is adjacent to a cassette side end portion of another module fiber optic cassette when each of the plurality of modular fiber optic cassette means are in the plurality of the plurality of different modular fiber optic cassette configurations.

13. The tray of claim 1, wherein the modular fiber optic cassette means comprises a plurality of modular fiber optic cassette means that include a cassette side end portion of one modular fiber optic cassette means that touches a cassette side end portion of another module fiber optic cassette when each of the modular fiber optic cassettes means are in the plurality of the plurality of different modular fiber optic cassette configurations.

14. The tray of claim 1, wherein the tray means has a tray width that is configured to receive at least twelve standard one width (1W) units side by side along a row.

15. The tray of claim 1, wherein the tray means including first tray end portion, a

CommScope v. Belden
IPR2024-01228
CommScope Exhibit 1037

second tray end portion spaced away from the first tray end portion so as to define a tray width extending between the first tray end portion and the second tray end portion, and wherein the tray width is configured to fit at least twelve standard one width (1W) units side by side along the tray means.

16. The tray of claim **Error! Reference source not found.**3, wherein the modular fiber optic cassette means comprise a multi-fiber connector receiving receptacle portion arranged on a rear portion thereof and a plurality of optic fibers, one of the optic fibers being configured to interconnect a respective one of the optic plug receiving receptacle portions with the multi-fiber connector receiving receptacle portion.

17. The tray of claim **Error! Reference source not found.**4, wherein the modular fiber optic cassette means comprises four fiber optic plug receiving receptacle portions configured to be arranged side by side in a row along a front portion thereof for each standard width (1W) unit.

18. The tray of claim **Error! Reference source not found.**, wherein the tray means is configured to be mounted in a rack.

19. The tray of claim **Error! Reference source not found.**, wherein the tray means is configured to be mounted in a standard U-space rack.

20. The tray of claim **Error! Reference source not found.**, wherein the tray means comprises a cassette fastening portion that is configured to removably secure the tray to the modular cassette means.

21. The tray of claim **Error! Reference source not found.**8, wherein the cassette fastening portion comprises a magnet.

22. The tray of claim **Error! Reference source not found.**, wherein the tray means is configured to be removable secured to an elongate cable management bracket that includes a bracket width that fits in the standard one width (1W) unit.

23. The tray of claim 20, wherein the elongate cable management bracket includes a cable management loop that is configured to be positioned in front of and to a side of an optic plug receiving receptacle portion of a modular cassette when the cable management loop is removably secured to the tray.

24. The tray of claim 1, wherein the tray means includes a plurality of cassette engaging tray portions that are each configured to engage a tray engaging cassette portion of each modular fiber optic cassette.

25. A tray for providing a plurality of different modular fiber optic cassette configurations in a fiber optic management system comprising:

a tray means for fitting a plurality of different modular fiber optic cassette configurations in a standard U-space;

wherein each of the plurality of different modular fiber optic cassette configurations include a plurality of different sizes of modular fiber optic cassettes;

wherein each of the plurality of different sizes of modular fiber optic cassettes is configured to support a fiber optic receptable module that is configured to fit in a standard one width (1W) unit;

wherein the plurality of different sizes of modular fiber optic cassettes include a 2W cassette size that is configured to fit a standard two width (2W) unit relative to the standard one width (1W) unit, a 3W cassette size that is configured to fit a standard three width (3W) unit relative to the standard one width (1W) unit, a 4W cassette size that is configured to fit a standard four width (4W) unit relative to the standard one width (1W) unit, and a 6W

CommScope v. Belden
IPR2024-01228
CommScope Exhibit 1037

cassette size that is configured to fit a standard six width (6W) unit relative to the standard one width (1W) unit;

wherein the plurality of different modular fiber optic cassette configurations comprise:

a first modular fiber optic cassette configuration that includes six modular 2W standard width unit size cassettes that are each arranged side by side of each other along the tray such that a cassette side end portion of each modular 2W standard width unit size cassette adjacently faces a cassette side end portion of at least one other modular 2W standard width size cassette;

a second modular fiber optic cassette configuration that includes four modular 3W standard width unit size cassettes that are each arranged side by side of each other in a row along the tray such that a cassette side end portion of each modular 3W standard width size cassette adjacently faces a cassette side end portion of at least one other modular 3W standard width size cassette;

a third modular fiber optic cassette configuration that includes three modular 4W standard width unit size cassettes that are each arranged side by side of each other in a row along the tray such that a cassette side end portion of each modular 4W standard width size cassette adjacently faces a cassette side end portion of at least one other modular 4W standard width size cassette; and

a fourth modular fiber optic cassette configuration that includes two modular 6W standard width unit size cassettes that are each arranged side by side of each other in a row along the tray such that a cassette side end portion of one of the two modular 6W standard width size cassettes adjacently faces a cassette side end portion of the other modular 6W standard width size cassette;

wherein the tray means is configured to be removable secured to each modular fiber optic cassette when the tray means fits the plurality of different

CommScope v. Belden
IPR2024-01228
CommScope Exhibit 1037

modular fiber optic cassette configurations within a tray width portion in the standard U-space fiber optic management system; and

wherein the tray means includes a plurality of cassette engaging portions that are configured to conform to the standard one width (1W) so as to support the modular 2W standard width unit size cassette, the modular 3W standard width unit size cassette, the modular 4W standard width unit size cassette, and the modular 6W standard width unit size cassette.

26. The tray of claim 25, wherein the tray means includes a first tray side end portion and a second tray side end portion defining a tray width portion extending between the first tray side end portion and the second tray side end portion, and where the tray width portion is configured to fit in a standard U-space width dimension.

27. The tray of claim 25, wherein the fiber optic receptable module includes a first module side end portion and a second module side end portion defining a module width portion extending between the first try end portion and second tray end portion, and the module width portion is configured to fit in the standard one width (1 W) unit.

28. The tray of claim 25, wherein the modular 2W standard width unit size cassette includes a first 2W cassette side end portion and a second 2W cassette side end portion defining a 2W standard cassette width unit extending between the first cassette side end portion and the second cassette side end portion that is configured to fit the standard two width (2W) unit.

29. The tray of claim 25, wherein the modular 3W standard width unit size cassette includes a first 3W cassette side end portion and a second 3W cassette side end portion defining a 3W standard cassette width unit

CommScope v. Belden
IPR2024-01228
CommScope Exhibit 1037

extending between the first 3W cassette side end portion and the second 3W cassette side end portion that is configured to fit the standard three width (3W) unit.

30. The tray of claim 25, wherein modular 4W standard width unit size cassette includes a first 4W cassette side end portion and a second 4W cassette side end portion defining a 4W standard cassette width unit extending between the first 4W cassette side end portion and the second 4W cassette side end portion that is configured to fit the standard four width (4W) unit.

31. The tray of claim 25, wherein the modular 6W standard width unit size cassette includes a first 6W cassette side end portion and a second 6W cassette side end portion defining a 6W standard cassette width unit extending between the first 6W cassette side end portion and the second 6W cassette side end portion that is configured to fit the standard six width (6W) unit.

32. The tray of claim 25, wherein the modular 2W standard width unit size cassette is configured to fit two receptacle modules.

33. The tray of claim 25, wherein the modular 3W standard width unit size cassette is configured to fit three receptacle modules.

34. The tray of claim 25, wherein the modular 4W standard width unit size cassette is configured to fit four receptacle modules.

35. The tray of claim 25, wherein the modular 6W standard width unit size cassette is configured to fit six receptacle modules.

36. The tray of claim 25, the fiber optic receptable module is configured to fit at

CommScope v. Belden
IPR2024-01228
CommScope Exhibit 1037

least four fiber optic plug receiving receptacle portions.

37. The tray of claim 25, the fiber optic receptable module is configured to fit at least four fiber optic plug receiving receptacle portions in the standard one width (1W) unit.

38. The tray of claim 25, wherein the standard one width (1W) unit is based on a standard LC Quad width unit that is configured to fit four optical fiber connectors.

39. The tray of claim 25, wherein the standard one width (1W) unit is based on a standard SC Duplex width unit that is configured to fit four optical fiber connectors.

40. The tray of claim 25, wherein the standard one width (1W) unit is based on a standard SC Duplex width unit that is configured to fit an plurality of different type of LC, SC, and MPO connectors.

41. The tray of claim 25, wherein the plurality of cassette engaging portions of the tray means are spaced apart from one another so as to conform to the standard one width (1W) and support the modular 2W standard width unit size cassette, the modular 3W standard width unit size cassette, the modular 4W standard width unit size cassette, and the modular 6W standard width unit size cassette.

42. The tray of claim 25, wherein the tray means includes a cassette engaging shoulder that is configured to fit a channel portion of each of the modular cassettes.

43. The tray of claim 42, wherein the cassette engaging shoulder is located

CommScope v. Belden
IPR2024-01228
CommScope Exhibit 1037

adjacent to a front end portion of the tray means such that the tray means is configured to support each of the modular cassettes at a front location of the tray.

44. The tray of claim 25, wherein the tray means is configured to be slideably received in at least portion of a tray receiving space of a case of a fiber optic management system.

45. The tray of claim 25, wherein each of the modular fiber optic cassettes include a cassette side end portion that is directly adjacent to a cassette side end portion of another module fiber optic cassette when each of the modular fiber optic cassettes are in the plurality of the plurality of different modular fiber optic cassette configurations.

46. The tray of claim 25, wherein each of the modular fiber optic cassettes include a cassette side end portion that is adjacent to a cassette side end portion of another module fiber optic cassette when each of the modular fiber optic cassettes are in the plurality of the plurality of different modular fiber optic cassette configurations.

47. The tray of claim 25, wherein each of the modular fiber optic cassettes include a cassette side end portion that is configured to touch a cassette side end portion of another module fiber optic cassette when each of the modular fiber optic cassettes are in the plurality of the plurality of different modular fiber optic cassette configurations.

48. The tray of claim 25, wherein the tray means has a tray width that is configured to receive at least twelve standard one width (1W) units side by side along a row.

CommScope v. Belden
IPR2024-01228
CommScope Exhibit 1037

49. The tray of claim 25, wherein the tray means has a first tray end portion, a second tray end portion that is spaced away from the first tray end portion so as to define a tray width extending between the first tray end portion and the second tray end portion, and wherein the tray width is configured to support at least twelve standard one width (1W) units side by side along the tray.

50. The tray of claim 25, wherein each of the modular fiber optic cassettes comprises a multi-fiber connector receiving receptacle portion arranged on a rear portion thereof and a plurality of optic fibers, one of the optic fibers being configured to interconnect a respective one of the optic plug receiving receptacle portions with the multi-fiber connector receiving receptacle portion.

51. The tray of claim 25, wherein each of the modules fiber optic cassettes comprises four fiber optic plug receiving receptacle portions configured to be arranged side by side in a row along a front portion thereof for each standard width (1W) unit.

52. The tray of claim 25, wherein the tray means is configured to be mounted in a rack.

53. The tray of claim 25, wherein the tray means is configured to be mounted in a standard U-space rack.

54. The tray of claim 25, wherein the tray means comprises a cassette fastening portion that is configured to removably secure the tray to each modular fiber optic cassette.

55. The tray of claim 25, wherein the cassette fastening portion comprises a magnet.

56. The tray of claim 25, wherein the tray means is configured to be removably secured to an elongate cable management bracket that includes a bracket width that fits in the standard one width (1W) unit.

57. The tray of claim 56, wherein the elongate cable management bracket includes a cable management loop that is configured to be positioned in front of and to a side of an optic plug receiving receptacle portion of a modular fiber optic cassette when the cable management loop is removably secured to the tray means.

58. The tray of claim 25, wherein the tray means includes a plurality of cassette engaging tray portions that are each configured to engage a tray engaging cassette portion of each modular fiber optic cassette.

59. The tray of claim 25, wherein the tray means comprises a tray member that is configured to fit in the standard U-space and support the plurality of different modular fiber optic cassette configurations in the standard U-space.

60. The tray of claim 25, wherein the plurality of different modular fiber optic cassette configurations further comprise a fifth modular fiber optic cassette configuration that includes three modular 2W standard width unit size cassettes, which are each arranged side by side of each other in a row along the tray such that a cassette side end portion of one of the three modular 2W standard width size cassettes adjacently faces a cassette side end portion of one of the other modular 2W standard width size cassette, and one modular 6W standard width unit size cassette that is arranged side by side in a row along the tray with one of the three modular 2W standard width unit size cassettes, such that a cassette side end portion of the one modular 6W standard width unit size cassette adjacently faces a cassette side end portion

CommScope v. Belden
IPR2024-01228
CommScope Exhibit 1037

of one of the other three modular 2W standard width unit size cassettes.

61. A tray for providing a plurality of different modular fiber optic cassette configurations in a standard U-space fiber optic management system comprising:

a tray means for supporting a plurality of different modular fiber optic cassette configurations;

wherein the plurality of different modular fiber optic cassette configurations include different sizes of modular fiber optic cassettes;

wherein each of the different sizes of modular fiber optic cassettes is configured to support a fiber optic receptable module that is configured to fit in a standard one width (1W) unit;

wherein the plurality of different sizes of modular fiber optic cassettes include a 2W cassette size that is configured to fit a standard two width (2W) unit relative to the standard one width (1W) unit, a 3W cassette size that is configured to fit a standard three width (3W) unit relative to the standard one width (1W) unit, a 4W cassette size that is configured to fit a standard four width (4W) unit relative to the standard one width (1W) unit, and a 6W cassette size that is configured to fit a standard six width (6W) unit relative to the standard one width (1W) unit;

wherein the plurality of different modular fiber optic cassette configurations comprise:

a first modular fiber optic cassette configuration that includes six modular 2W standard width unit size cassettes that are each arranged side by side of each other along the tray means such that a cassette side end portion of each modular 2W standard width unit size cassette adjacently faces a cassette side end portion of at least one other modular 2W standard width size cassette;

a second modular fiber optic cassette configuration that includes four modular 3W standard width unit size cassettes that are

each arranged side by side of each other in a row along the tray means such that a cassette side end portion of each modular 3W standard width size cassette adjacently faces a cassette side end portion of at least one other modular 3W standard width size cassette;

a third modular fiber optic cassette configuration that includes three modular 4W standard width unit size cassettes that are each arranged side by side of each other in a row along the tray means such that a cassette side end portion of each modular 4W standard width size cassette adjacently faces a cassette side end portion of at least one other modular 4W standard width size cassette; and

a fourth modular fiber optic cassette configuration that includes two modular 6W standard width unit size cassettes that are each arranged side by side of each other in a row along the tray means such that a cassette side end portion of one of the two modular 6W standard width size cassettes adjacently faces a cassette side end portion of the other modular 6W standard width size cassette; and

wherein the tray means is configured to conform to the standard one width (1W) so as to support the modular 2W standard width unit size cassette, the modular 3W standard width unit size cassette, the modular 4W standard width unit size cassette, and the modular 6W standard width unit size cassette.

62. The tray of claim 61, wherein the tray means is for fitting in a standard U-space width.

63. The tray of claim 61, wherein the tray means comprises a tray member that is configured to fit a plurality of different modular fiber optic cassette configurations in a standard U-space width.

64. The tray of claim 61, wherein each of the plurality of different modular fiber

optic cassette configurations include a plurality of different sizes of modular fiber optic cassettes.

65. The tray of claim 61, wherein the plurality of different modular fiber optic cassette configurations further comprise a fifth modular fiber optic cassette configuration that includes three modular 2W standard width unit size cassettes, which are each arranged side by side of each other in a row along the tray means such that a cassette side end portion of one of the three modular 2W standard width size cassettes adjacently faces a cassette side end portion of one of the other modular 2W standard width size cassette, and one modular 6W standard width unit size cassette that is arranged side by side in a row along the tray means with one of the three modular 2W standard width unit size cassettes, such that a cassette side end portion of the one modular 6W standard width unit size cassette adjacently faces a cassette side end portion of one of the other three modular 2W standard width unit size cassettes.

66. The tray of claim 61, wherein the tray means comprises a tray member that is configured to be removable secured to each modular fiber optic cassette when the tray member supports the plurality of different modular fiber optic cassette configurations within a tray member width portion in a standard U-space fiber management system.

67. The tray of claim 61, wherein the tray means includes a plurality of selectively engaging cassette engaging portions that are configured to conform to the standard one width (1W) so as to support the modular 2W standard width unit size cassette, the modular 3W standard width unit size cassette, the modular 4W standard width unit size cassette, and the modular 6W standard width unit size cassette.

CommScope v. Belden
IPR2024-01228
CommScope Exhibit 1037

68. The tray of claim 67, wherein the plurality of selectively engaging cassette engaging portions comprises a plurality of slot portions that are each configured to releasably engage with a tab portion of the modular 2W standard width unit size cassette, the modular 3W standard width unit size cassette, the modular 4W standard width unit size cassette, and the modular 6W standard width unit size cassette.

69. The tray of claim 68, wherein the plurality of slot portions include at least two slot portions that are configured to releaseably engage with at least two corresponding tab portions of each of the modular 2W standard width unit size cassette, the modular 3W standard width unit size cassette, the modular 4W standard width unit size cassette, and the modular 6W standard width unit size cassette.

70. The tray of claim 61, wherein the tray means includes a plurality of selectively engaging cassette engaging portions that are spaced apart from one another so as to be configured to conform to the standard one width (1W) and support the modular 2W standard width unit size cassette, the modular 3W standard width unit size cassette, the modular 4W standard width unit size cassette, and the modular 6W standard width unit size cassette.

71. The tray of claim 70, wherein the plurality of selectively engaging cassette engaging portions comprises a plurality of slot portions that are each configured to releasably engage with a tab portion of each of the modular 2W standard width unit size cassette, the modular 3W standard width unit size cassette, the modular 4W standard width unit size cassette, and the modular 6W standard width unit size cassette.

72. The tray of claim 71, wherein the plurality of slot portions include at least two slot portions that are configured to releaseably engage with at least two

corresponding tab portions of each of the modular 2W standard width unit size cassette, the modular 3W standard width unit size cassette, the modular 4W standard width unit size cassette, and the modular 6W standard width unit size cassette.

73. The tray of claim 61, wherein the tray means comprises a tray member that includes a first tray member side end portion and a second tray member side end portion defining a tray member width portion extending between the first tray member side end portion and the second tray member side end portion, and where the tray member width portion is configured to fit in a standard U-space width dimension.

74. The tray of claim 61, wherein the fiber optic receptable module includes a first module side end portion and a second module side end portion defining a module width portion extending between the first try end portion and second tray member end portion, and the module width portion is configured to fit in the standard one width (1 W) unit.

75. The tray of claim 61, wherein modular 2W standard width unit size cassette includes a first 2W cassette side end portion and a second 2W cassette side end portion defining a 2W standard cassette width unit extending between the first cassette side end portion and the second cassette side end portion that is configured to fit the standard two width (2W) unit.

76. The tray of claim 61, wherein the modular 3W standard width unit size cassette includes a first 3W cassette side end portion and a second 3W cassette side end portion defining a 3W standard cassette width unit extending between the first 3W cassette side end portion and the second 3W cassette side end portion that is configured to fit the standard three width (3W) unit.

CommScope v. Belden
IPR2024-01228
CommScope Exhibit 1037

77. The tray of claim 61, wherein modular 4W standard width unit size cassette includes a first 4W cassette side end portion and a second 4W cassette side end portion defining a 4W standard cassette width unit extending between the first 4W cassette side end portion and the second 4W cassette side end portion that is configured to fit the standard four width (4W) unit.

78. The tray of claim 61, wherein the modular 6W standard width unit size cassette includes a first 6W cassette side end portion and a second 6W cassette side end portion defining a 6W standard cassette width unit extending between the first 6W cassette side end portion and the second 6W cassette side end portion that is configured to fit the standard six width (6W) unit.

79. The tray of claim 61, wherein the modular 2W standard width unit size cassette is configured to fit two receptacle modules.

80. The tray of claim 61, wherein the modular 3W standard width unit size cassette is configured to fit three receptacle modules.

81. The tray of claim 61, wherein the modular 4W standard width unit size cassette is configured to fit four receptacle modules.

82. The tray of claim 61, wherein the modular 6W standard width unit size cassette is configured to fit six receptacle modules.

83. The tray of claim 61, the fiber optic receptable module is configured to fit at least four fiber optic plug receiving receptacle portions.

84. The tray of claim 61, the fiber optic receptable module is configured to fit at

least four fiber optic plug receiving receptacle portions in the standard one width (1W) unit.

85. The tray of claim 61, wherein the standard one width (1W) unit is based on a standard LC Quad width unit that is configured to fit four optical fiber connectors.

86. The tray of claim 61, wherein the standard one width (1W) unit is based on a standard SC Duplex width unit that is configured to fit four optical fiber connectors.

87. The tray of claim 61, wherein the standard one width (1W) unit is based on a standard SC Duplex width unit that is configured to fit an plurality of different type of LC, SC, and MPO connectors.

88. The tray of claim 61, wherein the tray means comprises a row of cassette engaging portions that are spaced apart from one another so as to conform to the standard one width (1W) and support the modular 2W standard width unit size cassette, the modular 3W standard width unit size cassette, the modular 4W standard width unit size cassette, and the modular 6W standard width unit size cassette.

89. The tray of claim 88, wherein the row of cassette engaging portions comprises a row of slot portions that are each spaced apart from one another.

90. The tray of claim 88, wherein the row of cassette engaging portions comprises a first row of cassette engaging portions, and the tray means includes a second row of cassette engaging portion that is spaced away from the first row of cassette engaging portions.

CommScope v. Belden
IPR2024-01228
CommScope Exhibit 1037

91. The tray of claim 90, wherein the first row of cassette engaging portion comprises a first row of slot portions that are each configured to engage a tab portion of each modular cassette.

92. The tray of claim 88, wherein the row of cassette engaging portions comprises a front row of cassette engaging portions, and the tray includes a rear row of cassette engaging portion that is spaced away from the front row of cassette engaging portions.

93. The tray of claim 92, wherein the front row of cassette engaging portion comprises a front row of slot portions that are each configured to engage a tab portion of each modular cassette.

94. The tray of claim 93, wherein the rear row of cassette engaging portion comprises a rear row of aperture portions that are each configured to engage a moveable tab portion of each modular cassette that is configured to move between a first position, where the tab portion is configured to prevent each modular cassette from being released from the tray member, and a second position, where the tab portion is configured to permit each modular cassette to be released from the tray member.

95. The tray of claim 94, wherein the moveable tab portion includes a boss portion that is configured to engage a corresponding aperture portion of the rear row of cassette engaging portion when the moveable tab portion is in the first position.

96. The tray of claim 61, wherein the tray means includes a cassette engaging shoulder that is configured to fit a channel portion of each of the modular cassettes.

97. The tray of claim 96, wherein the cassette engaging shoulder is located adjacent to a front end portion of the tray means such that the tray means is configured to support each of the modular cassettes at a front location of the tray means.

98. The tray of claim 61, wherein the tray means is configured to be slideably received in at least portion of a tray member receiving space of a case of a fiber optic management system.

99. The tray of claim 61, wherein each of the modular fiber optic cassettes include a cassette side end portion that is directly adjacent to a cassette side end portion of another module fiber optic cassette when each of the modular fiber optic cassettes are in the plurality of the plurality of different modular fiber optic cassette configurations.

100. The tray of claim 61, wherein each of the modular fiber optic cassettes include a cassette side end portion that is adjacent to a cassette side end portion of another module fiber optic cassette when each of the modular fiber optic cassettes are in the plurality of the plurality of different modular fiber optic cassette configurations.

101. The tray of claim 61, wherein each of the modular fiber optic cassettes include a cassette side end portion that touches a cassette side end portion of another module fiber optic cassette when each of the modular fiber optic cassettes are in the plurality of the plurality of different modular fiber optic cassette configurations.

102. The tray of claim 61, wherein the tray means has a tray member width that is configured to support at least twelve standard one width (1W) units side by side along a row.

CommScope v. Belden
IPR2024-01228
CommScope Exhibit 1037

103. The tray of claim 61, wherein the tray means has a first tray member end portion, a second tray member end portion that is spaced away from the first tray member end portion so as to define a tray member width that extends between the first tray member end portion and the second tray member end portion, and wherein the tray member width is configured to support at least twelve standard one width (1W) units side by side along the tray member.

104. The tray of claim 61, wherein each of the modular fiber optic cassettes comprises a multi-fiber connector receiving receptacle portion arranged on a rear portion thereof and a plurality of optic fibers, one of the optic fibers being configured to interconnect a respective one of the optic plug receiving receptacle portions with the multi-fiber connector receiving receptacle portion.

105. The tray of claim 61, wherein each of the modules fiber optic cassettes comprises four fiber optic plug receiving receptacle portions configured to be arranged side by side in a row along a front portion thereof for each standard width (1W) unit.

106. The tray of claim 61, wherein the tray means is configured to be mounted in a rack.

107. The tray of claim 61, wherein the tray means is configured to be mounted in a standard U-space rack.

108. The tray of claim 61, wherein the tray means comprises a cassette fastening portion that is configured to removably secure the tray means to each modular fiber optic cassette.

109. The tray of claim 108, wherein the cassette fastening portion comprises a magnet.

110. The tray of claim 61, wherein the tray means is configured to be removable secured to an elongate cable management bracket that includes a bracket width that fits in the standard one width (1W) unit.

111. The tray of claim 110, wherein the elongate cable management bracket includes a cable management loop that is configured to be positioned in front of and to a side of an optic plug receiving receptacle portion of a modular fiber optic cassette when the cable management loop is removably secured to the tray means.

112. The tray of claim 61, wherein the tray means comprises a tray member that is configured to support the plurality of different modular fiber optic cassette configurations in a standard U-space width.

113. A tray for providing a plurality of different modular fiber optic cassette configurations in a standard U-space fiber optic management system comprising:

a tray means for supporting a plurality of different modular fiber optic cassette configurations;

wherein the plurality of different modular fiber optic cassette configurations include different sizes of modular fiber optic cassettes;

wherein each of the different sizes of modular fiber optic cassettes is configured to support a fiber optic receptable module that is configured to fit in a standard one width (1W) unit;

wherein the plurality of different sizes of modular fiber optic cassettes include a 2W cassette size that is configured to fit a standard two width (2W) unit relative to the standard one width (1W) unit, a 3W cassette size that is

CommScope v. Belden
IPR2024-01228
CommScope Exhibit 1037

configured to fit a standard three width (3W) unit relative to the standard one width (1W) unit, a 4W cassette size that is configured to fit a standard four width (4W) unit relative to the standard one width (1W) unit, and a 6W cassette size that is configured to fit a standard six width (6W) unit relative to the standard one width (1W) unit; and

wherein the tray means is configured to conform to the standard one width (1W) so as to support the modular 2W standard width unit size cassette, the modular 3W standard width unit size cassette, the modular 4W standard width unit size cassette, and the modular 6W standard width unit size cassette.

114. The tray of claim 113, wherein the plurality of different modular fiber optic cassette configurations includes a first modular fiber optic cassette configuration that includes six modular 2W standard width unit size cassettes that are each arranged side by side of each other along the tray member such that a cassette side end portion of each modular 2W standard width unit size cassette adjacently faces a cassette side end portion of at least one other modular 2W standard width size cassette.

115. The tray of claim 114, wherein the plurality of different modular fiber optic cassette configurations include a second modular fiber optic cassette configuration that includes four modular 3W standard width unit size cassettes that are each arranged side by side of each other in a row along the tray member such that a cassette side end portion of each modular 3W standard width unit size cassette adjacently faces a cassette side end portion of at least one other modular 3W standard width unit size cassette.

116. The tray of claim 115, wherein the plurality of different modular fiber optic cassette configurations include a third modular fiber optic cassette configuration that includes three modular 4W standard width unit size

CommScope v. Belden
IPR2024-01228
CommScope Exhibit 1037

cassettes that are each arranged side by side of each other in a row along the tray member such that a cassette side end portion of each modular 4W standard width unit size cassette adjacently faces a cassette side end portion of at least one other modular 4W standard width unit size cassette.

117. The tray of claim 116, wherein the plurality of different modular fiber optic cassette configurations include a fourth modular fiber optic cassette configuration that includes two modular 6W standard width unit size cassettes that are each arranged side by side of each other in a row along the tray member such that a cassette side end portion of one of the two modular 6W standard width unit size cassettes adjacently faces a cassette side end portion of the other modular 6W standard width unit size cassette.

CommScope v. Belden
IPR2024-01228
CommScope Exhibit 1037