8416456

THE UNITED STATES OF AMERICA

TO ALL TO WHOM THESE PRESENTS SHALL COME:

UNITED STATES DEPARTMENT OF COMMERCE

United States Patent and Trademark Office

September 26, 2023

THIS IS TO CERTIFY THAT ANNEXED IS A TRUE COPY FROM THE RECORDS OF THIS OFFICE OF THE FILE WRAPPER AND CONTENTS OF:

APPLICATION NUMBER: ***15/687,249***
FILING DATE: ***August 25, 2017***
PATENT NUMBER: ***11048751***
ISSUE DATE: ***June 29, 2021***

UNITED STATES PATENT AND TRADEMARK OFFICE
DEPARTMENT OF COMMERCE

Certified by

Kathi

Performing the Functions and Duties of the
Under Secretary of Commerce
for Intellectual Property
and Director of the United States
Patent and Trademark Office

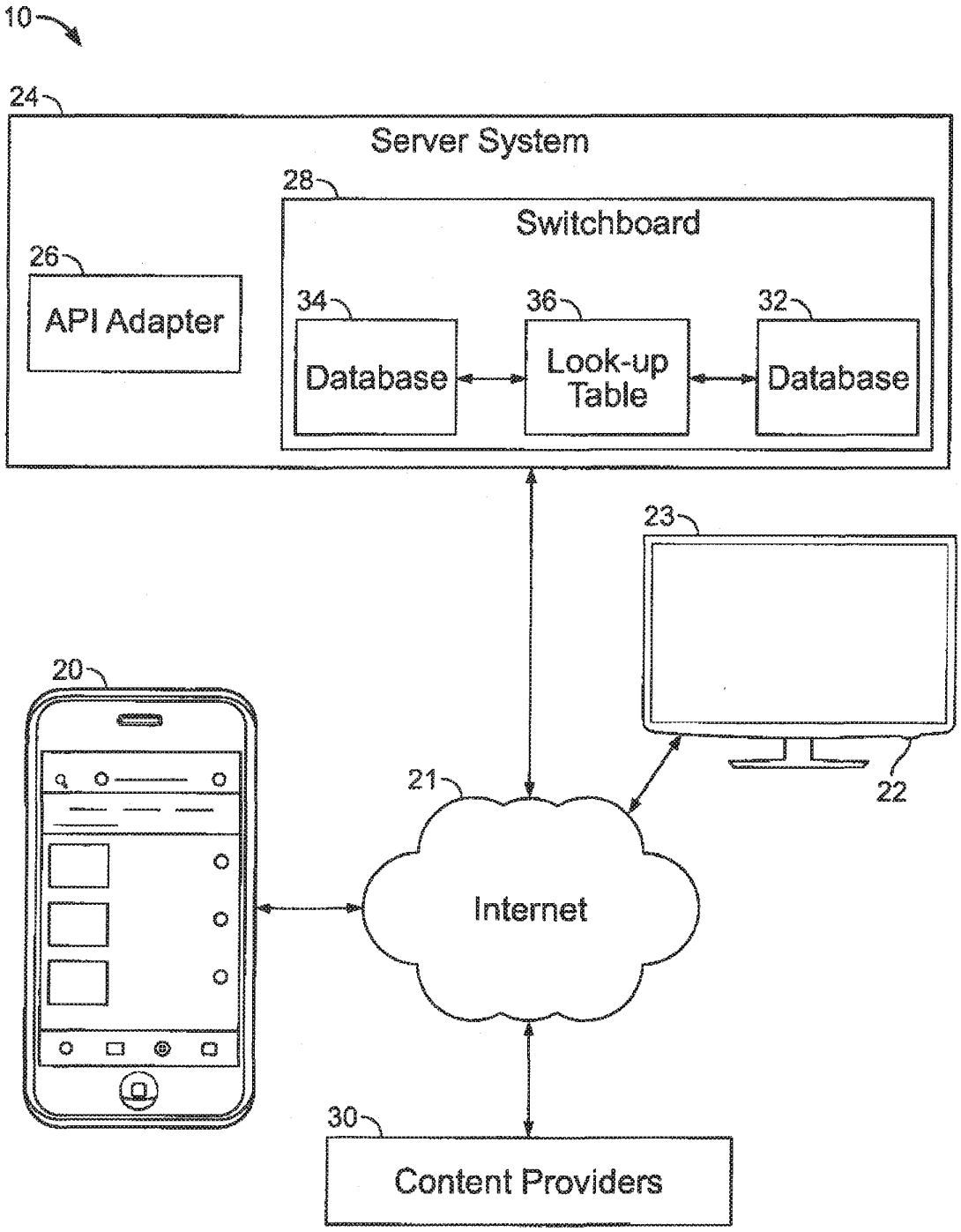
10
24
Server System
28
Switchboard
26
API Adapter
34
Database
36
Look-up Table
32
Database
23
20
21
22
Internet
30
Content Providers

FIG. 1

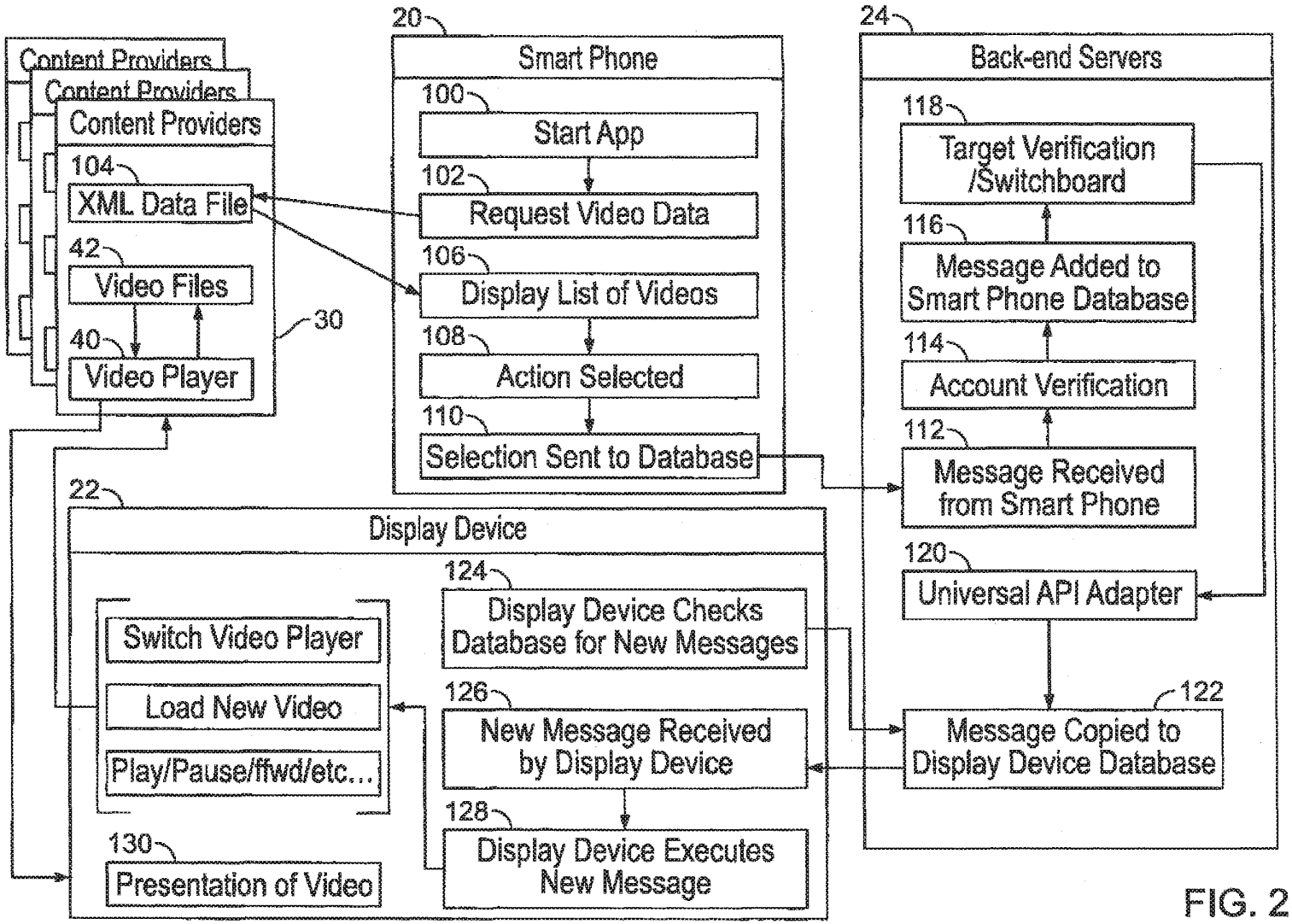
Content Providers
Content Providers
Content Providers
104
XML Data File
42
Video Files
40
Video Player
30
20
Smart Phone
100
Start App
102
Request Video Data
106
Display List of Videos
108
Action Selected
110
Selection Sent to Database
24
Back-end Servers
118
Target Verification /Switchboard
116
Message Added to Smart Phone Database
114
Account Verification
112
Message Received from Smart Phone
120
Universal API Adapter
122
Message Copied to Display Device Database
22
Display Device
Switch Video Player
Load New Video
Play/Pause/ffwd/etc...
130
Presentation of Video
124
Display Device Checks Database for New Messages
126
New Message Received by Display Device
128
Display Device Executes New Message

FIG. 2

Transmission Code				
UserID	TargetID	MediaPlayerID	Command	Data

FIG. 3

Single Connection Look-up Table	
Display Device	User - Smartphone
2	A
1	C
3	D
4	B

FIG. 4

26

Universal API Adapter		
Universal Command	MediaPlayerID	Specific Player Command
New Video	YouTube	yt_loadVideo
	Ted.com	getVideo
	Vimeo	loadNewVideo
Pause	YouTube	yt_pauseVideo
	Ted.com	pauseVideo
	Vimeo	pause

FIG. 5

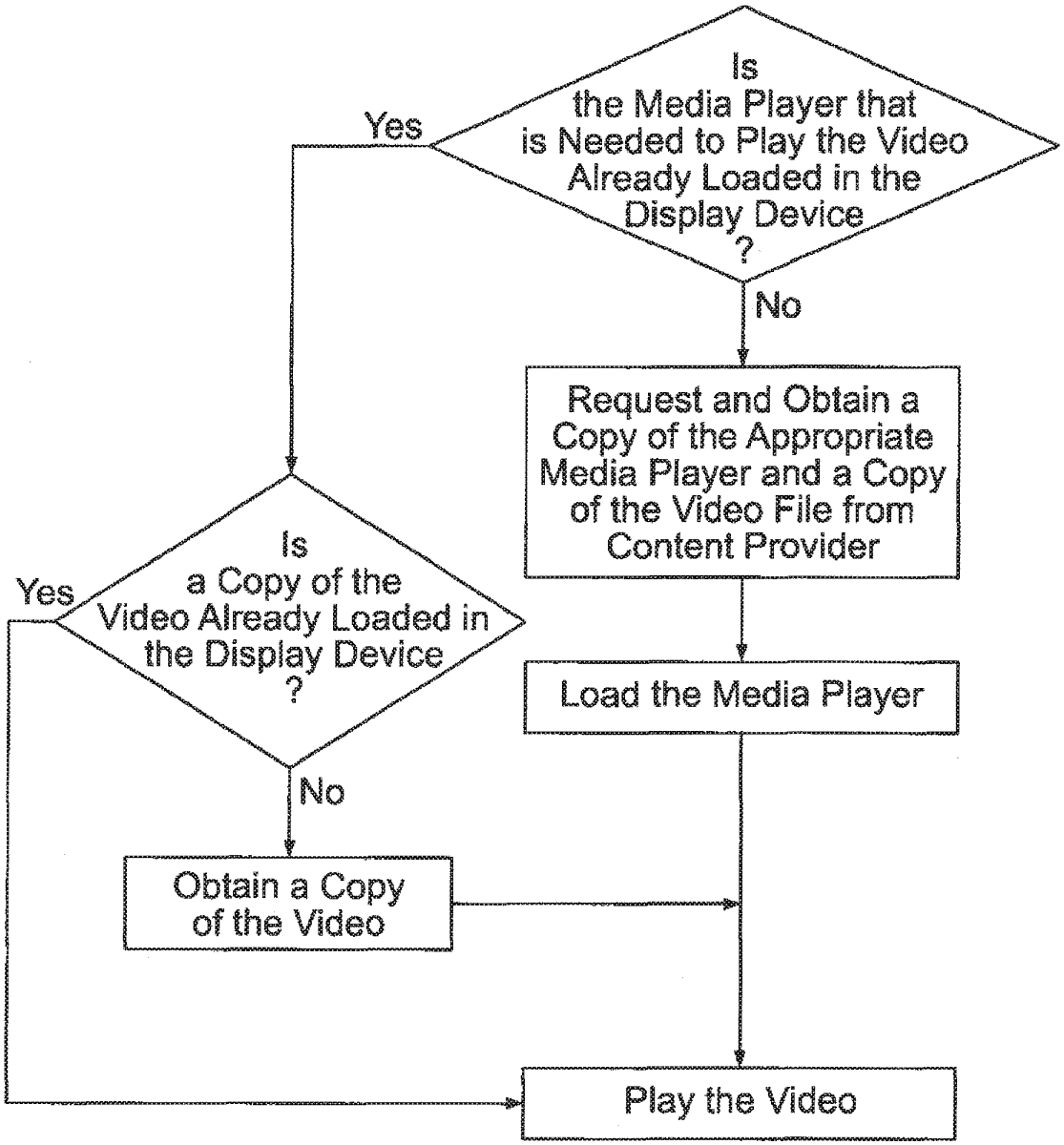
Is the Media Player that is Needed to Play the Video Already Loaded in the Display Device ?
Yes
No
Request and Obtain a Copy of the Appropriate Media Player and a Copy of the Video File from Content Provider
Load the Media Player
Is a Copy of the Video Already Loaded in the Display Device ?
Yes
No
Obtain a Copy of the Video
Play the Video

FIG. 6

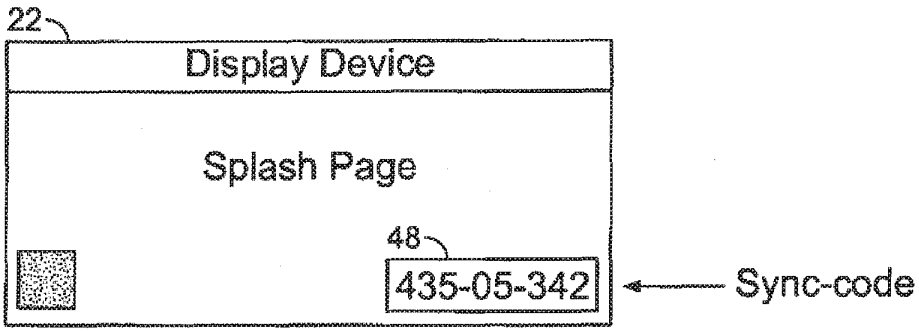

FIG. 7A

Sync-code Look-up Table		
IP Address	Cookie	Sync-code
169.343.231.234	erjg988dhuj	435-05-342

FIG. 7B

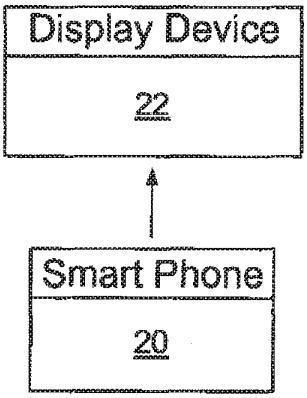

FIG. 8

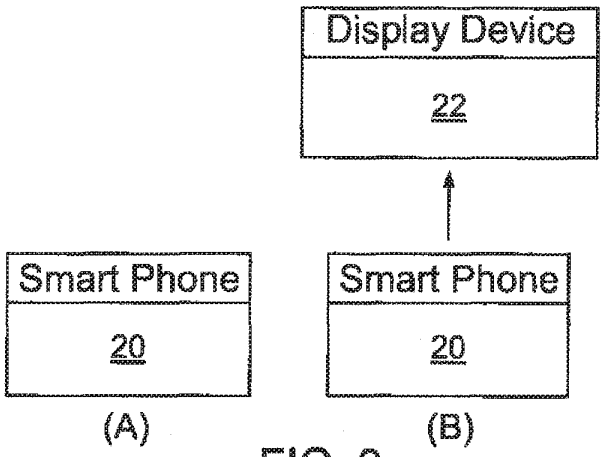

FIG. 9

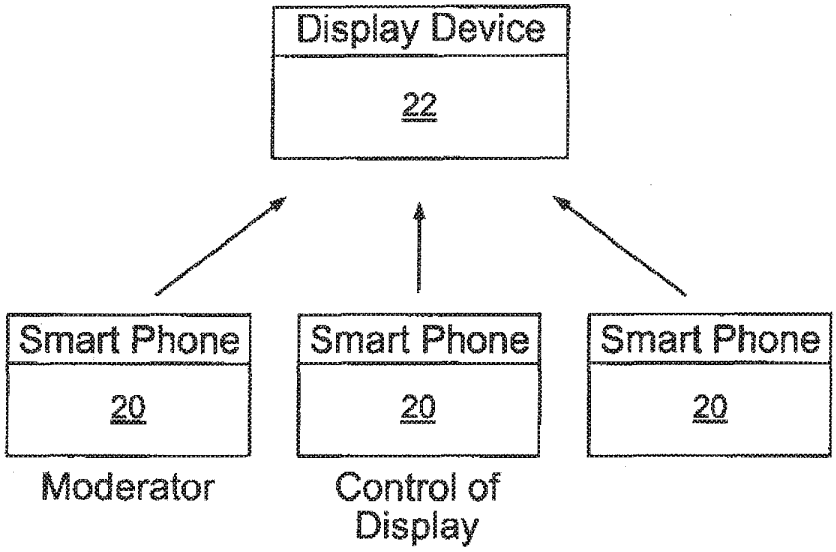
Display Device
22
Smart Phone
20
Moderator
Smart Phone
20
Control of Display
Smart Phone
20

FIG. 10

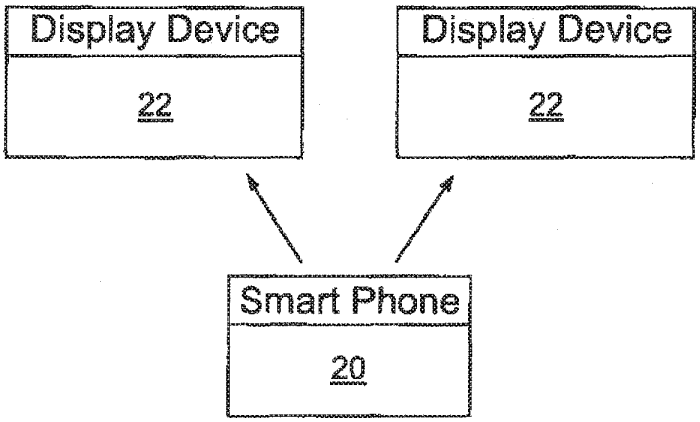
Display Device
22
Display Device
22
Smart Phone
20

FIG. 11

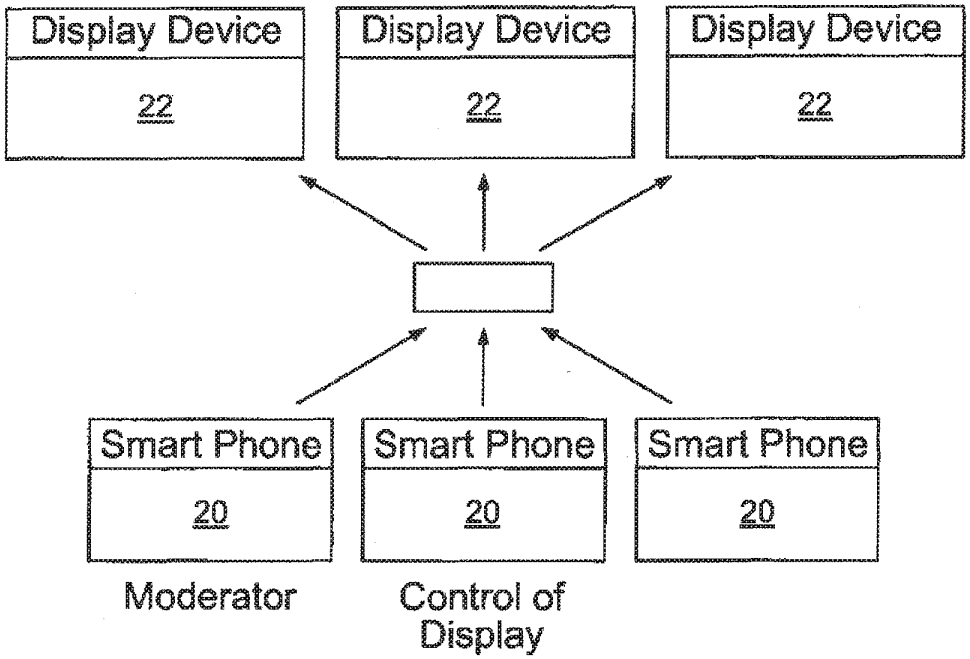
Display Device
22
Display Device
22
Display Device
22
Smart Phone
20
Smart Phone
20
Smart Phone
20
Moderator
Control of Display

FIG. 12

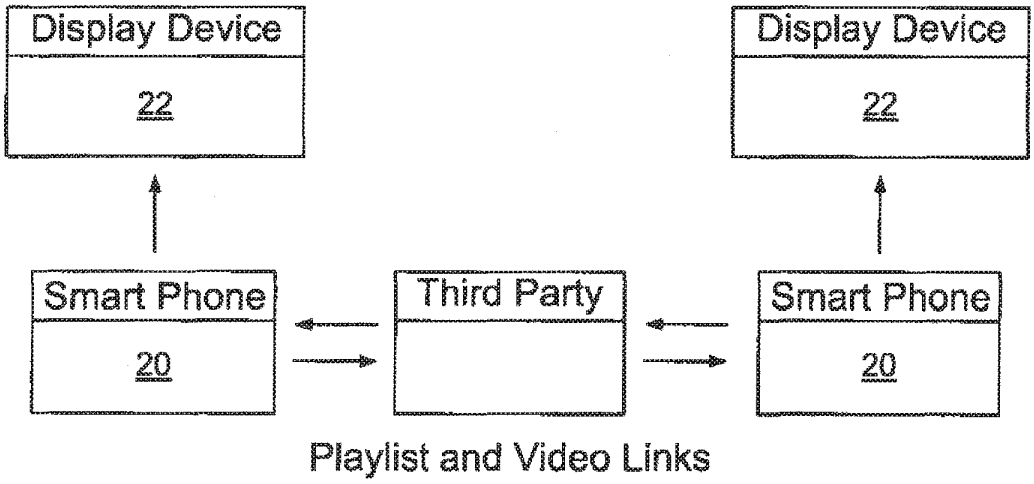
Display Device
22
Display Device
22
Smart Phone
20
Third Party
Smart Phone
20
Playlist and Video Links

FIG. 13

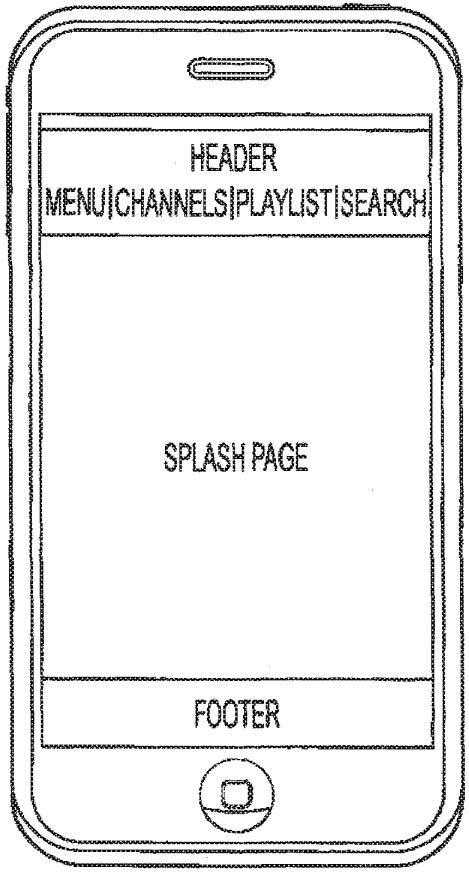

FIG. 14A

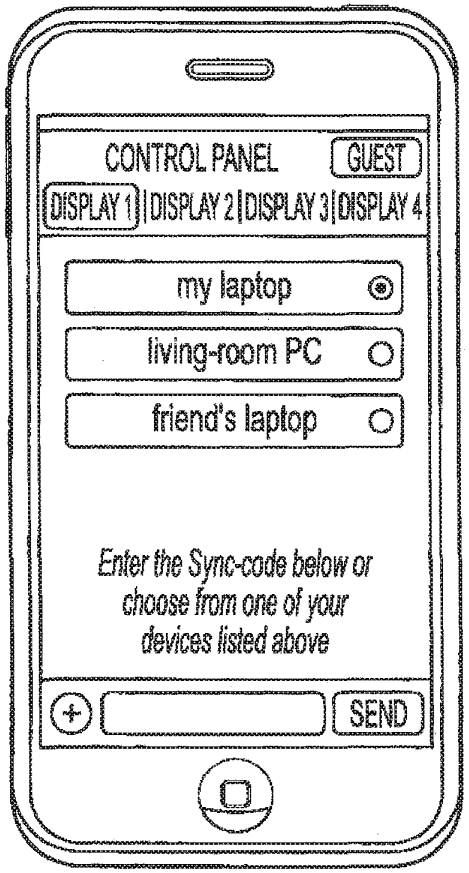

FIG. 14B

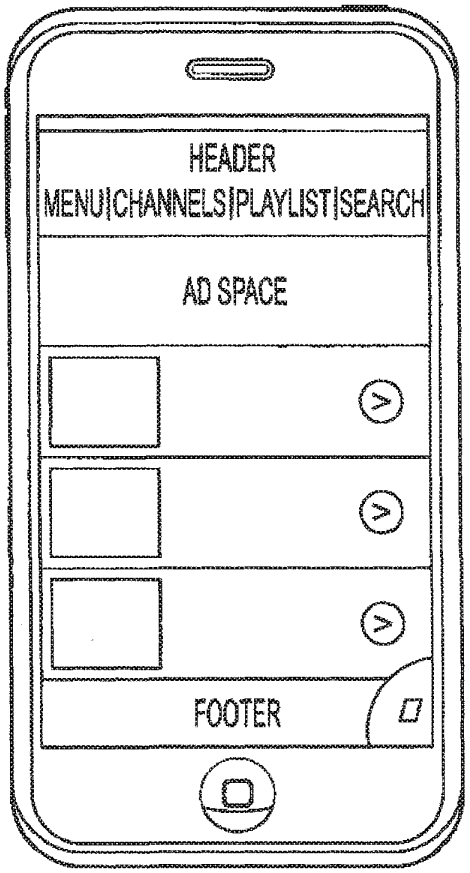

FIG. 14C

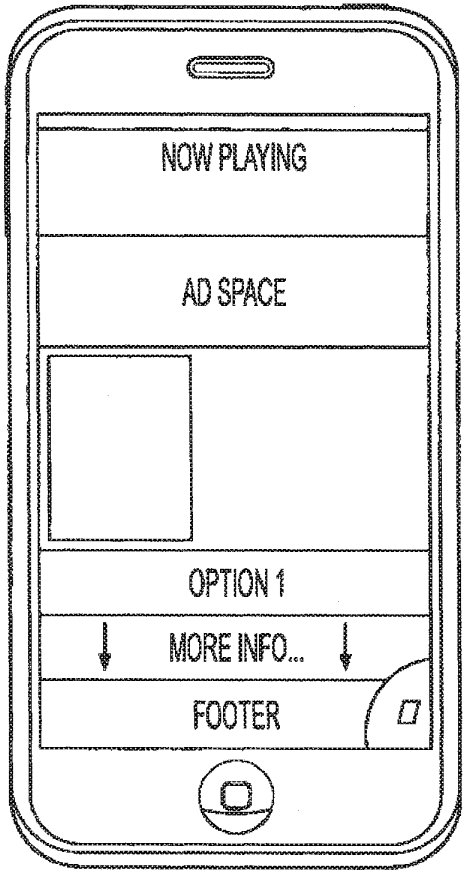

FIG. 14D

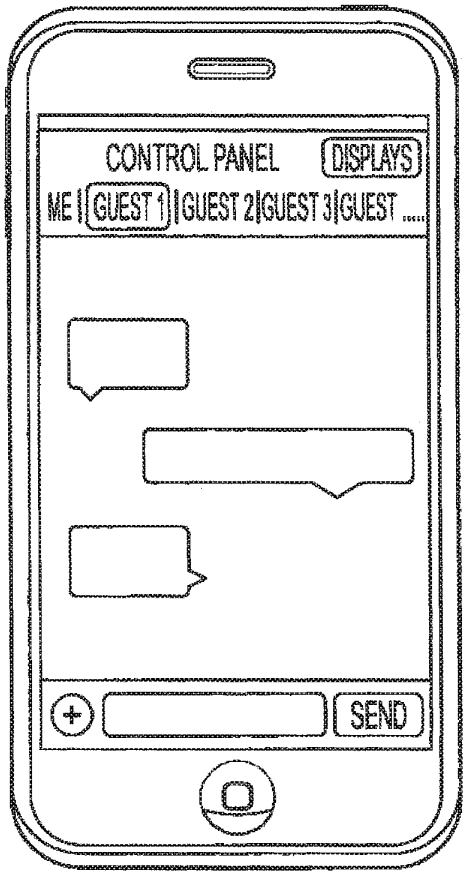

FIG. 14E

Group Connection Look-up Table		
Display Device	Group	User - Smartphone
2	X	A",C*,D
1,3	Y	B"*,E

" = Group Moderator,
* = Control of Display Device

FIG. 15

PTO/AIA/01 (06-12)
Approved for use through 01/31/2014. OMB 0651-0032
U.S. Patent and Trademark Office; U.S. DEPARTMENT OF COMMERCE
Under the Paperwork Reduction Act of 1995, no persons are required to respond to a collection of information unless it displays a valid OMB control number.

DECLARATION (37 CFR 1.63) FOR UTILITY OR DESIGN APPLICATION USING AN APPLICATION DATA SHEET (37 CFR 1.76)

Title of Invention	PLAY CONTROL OF CONTENT ON A DISPLAY DEVICE

As the below named inventor, I hereby declare that:

This declaration is directed to:

- [x] The attached application, or
- [ ] United States application or PCT international application number _____ filed on _____.

The above-identified application was made or authorized to be made by me.

I believe that I am the original inventor or an original joint inventor of a claimed invention in the application.

I hereby acknowledge that any willful false statement made in this declaration is punishable under 18 U.S.C. 1001 by fine or imprisonment of not more than five (5) years, or both.

WARNING:

Petitioner/applicant is cautioned to avoid submitting personal information in documents filed in a patent application that may contribute to identity theft. Personal information such as social security numbers, bank account numbers, or credit card numbers (other than a check or credit card authorization form PTO-2038 submitted for payment purposes) is never required by the USPTO to support a petition or an application. If this type of personal information is included in documents submitted to the USPTO, petitioners/applicants should consider redacting such personal information from the documents before submitting them to the USPTO. Petitioner/applicant is advised that the record of a patent application is available to the public after publication of the application (unless a non-publication request in compliance with 37 CFR 1.213(a) is made in the application) or issuance of a patent. Furthermore, the record from an abandoned application may also be available to the public if the application is referenced in a published application or an issued patent (see 37 CFR 1.14). Checks and credit card authorization forms PTO-2038 submitted for payment purposes are not retained in the application file and therefore are not publicly available.

LEGAL NAME OF INVENTOR

Inventor: DAVID STROBER Date (Optional): Aug 25, 2017

Signature: / [illegible] /

Note: An application data sheet (PTO/SB/14 or equivalent), including naming the entire inventive entity, must accompany this form or must have been previously filed. Use an additional PTO/AIA/01 form for each additional inventor.

This collection of information is required by 35 U.S.C. 115 and 37 CFR 1.63. The information is required to obtain or retain a benefit by the public which is to file (and by the USPTO to process) an application. Confidentiality is governed by 35 U.S.C. 122 and 37 CFR 1.11 and 1.14. This collection is estimated to take 1 minute to complete, including gathering, preparing, and submitting the completed application form to the USPTO. Time will vary depending upon the individual case. Any comments on the amount of time you require to complete this form and/or suggestions for reducing this burden, should be sent to the Chief Information Officer, U.S. Patent and Trademark Office, U.S. Department of Commerce, P.O. Box 1450, Alexandria, VA 22313-1450. DO NOT SEND FEES OR COMPLETED FORMS TO THIS ADDRESS. **SEND TO: Commissioner for Patents, P.O. Box 1450, Alexandria, VA 22313-1450.**

If you need assistance in completing the form, call 1-800-PTO-9199 and select option 2.

ABSTRACT OF THE INVENTION

A system for presenting and controlling content on a display device includes a network, a server system coupled to the network and comprising one or more servers, a display device coupled to the network and having a display, and a personal computing device operable to transmit a first message according to a specified format over the network to the server system. The server system stores an association between the personal computing device and the display device. The first message identifies user-selected content and a media player to play the content. The server system is operable, in response to receiving the first message from the personal computing device, to provide to the display device a second message identifying the user-selected content and the media player to play the content. In response to receiving the second message, the display device is operable to obtain a first media player needed to play the content, to load the media player and to present the content on the display.

CLAIMS

What is claimed is:

1. A non-transitory computer storage medium storing computer-useable instructions that, when used by one or more computing devices, cause the one or more computing devices to perform operations for remotely presenting various types of content, the operations comprising:

initializing a connection with a remote server device to facilitate an association with a remote computing device;

receiving, from the remote server device, a first message that includes at least one command in a first format, wherein the first message is received based at least in part on a second message including at least one command in a second format having been sent from the associated remote computing device;

employing a first media player application operable to load a first piece of content referenced in the received first message; and

controlling a presentation of the first piece of content loaded in the employed first media player application based on a first command in the first format having been included in the received first message for recognition by the first media player application.

2. The non-transitory computer storage medium of claim 1, wherein a command in the second format is a universal command.

3. The non-transitory computer storage medium of claim 2, wherein the first format is different than the second format.

4. The non-transitory computer storage medium of claim 1, wherein the second message is sent to the remote server device.

5. The non-transitory computer storage medium of claim 1, wherein the at least one command in the second format is converted into the at least one command in the first format based at least in part on the second message including therein a reference to the first piece of content.

6. The non-transitory computer storage medium of claim 1, wherein the at least one command in the second format is converted into the at least one command in the first format based at least in part on a reference to the first media player application having been included in the second message.

7. The non-transitory computer storage medium of claim 1, wherein the first media player application is employed based at least in part on the received first message including therein a reference to the first media player application.

8. The non-transitory computer storage medium of claim 1, wherein controlling the presentation includes an execution of the first command.

9. The non-transitory computer storage medium of claim 1, the operations further comprising:

obtaining the first media player application based on a determination that the first media player application is not already being employed.

10. The non-transitory computer storage medium of claim 9, wherein the first media player application is obtained from a content provider that corresponds to the referenced first piece of content.

11. The non-transitory computer storage medium of claim 1, wherein the connection with the remote server device is maintained, for at least a duration that the first media player application is being employed, to facilitate a change from the first media player application to a second media player application operable to load a second piece of content referenced in a second message received from the remote server device.

12. A computer-implemented method for remotely presenting various types of content, comprising:

initializing, by a content presentation device, a connection with a remote server device to facilitate an association between the content presentation device and a remote computing device;

receiving, by the content presentation device and from the remote server device, a first message that includes at least one command in a first format, wherein the first message is received based at least in part on a second message including at

least one command in a second format having been sent from the remote computing device associated with the content presentation device;

employing, while the connection with the remote server device is maintained, a first media player application operable to load a first piece of content based at least in part on the first piece of content being referenced in the received first message; and

controlling, by the content presentation device, a presentation of the first piece of content loaded in the employed first media player application based on a first command in the first format having been included in the received first message for recognition by the first media player application.

13. The computer-implemented method of claim 12, wherein the first media player application is employed based at least in part on the received first message including therein a reference to the first media player application.

14. The computer-implemented method of claim 12, the operations further comprising:

obtaining the first media player application based on a determination that a second media player application is being employed.

15. The computer-implemented method of claim 12, wherein the first media player application obtained by retrieving the first media player application from a content provider associated with the referenced first piece of content.

16. The computer-implemented method of claim 12, wherein the presentation of the first piece of content loaded in the employed first media player application is controlled based further on the first command in the first format having been converted, from the second command in the second format, for inclusion in the received first message for recognition by the first media player application.

17. A content presentation device comprising:

a display;

at least one processor; and

at least one computer storage media storing computer-usable instructions that, when used by the at least one processor, cause the at least one processor to:

initialize a connection with a remote server device to facilitate an association between the content presentation device and a remote computing device, wherein the associated remote computing device is configured to send messages that include at least one command in a second format;

receive, from the remote server device, a first message that includes at least one command in a first format based on a second message in the second format sent from the associated remote computing device;

employ a first media player application operable to load a first piece of content referenced in the received first message; and

control a presentation of the first piece of content loaded in the employed first media player application based on a first command in the first format having been included in the received first message for recognition by the first media player application.

18. The content presentation device of claim 17, wherein a command in the first format is recognizable by the first media player application.

19. The content presentation device of claim 17, wherein the second message is sent to the remote server device.

20. The content presentation device of claim 18, wherein the first media player application is employed based at least in part on the received first message including therein a reference to the first media player application.

PLAY CONTROL OF CONTENT ON A DISPLAY DEVICE

CROSS-REFERENCE TO RELATED APPLICATIONS

[0001] The present application is a continuation of U.S. Application No. 13/532,546, filed on June 25, 2012, which is a continuation-in-part of U.S. Application No. 13/157,821, filed on June 10, 2011, which issued on December 2, 2014 as U.S. Patent No. 8,904,289, which claims the benefit of priority to U.S. Provisional Patent Application No. 61/477,998, filed on April 21, 2011. The contents of the earlier applications are incorporated herein by reference.

BACKGROUND

[0002] This disclosure relates to play control of content on a display device. Such display devices include, for example, television displays used by consumers in their home for viewing videos and other media that are either provided from the Web or previously stored. In particular, the disclosure relates to the creation, storage, manipulation and access of media playlists used in conjunction with display devices and control of the display devices.

[0003] Web media often is played on computers rather than television displays. Although it is known to connect a computer to a television set in order to watch Web media, it is difficult to control such a system within the typical scenario for television watching where the viewer is positioned some distance from the television. Furthermore, although a wireless device can enable the user to control the television from a distance, it can be difficult to view a web browser display on the television set and may interfere with normal television program viewing by other persons.

[0004] Given the desire to watch various World Wide Web media on a family's primary television set, and to control this operation from the comfort of one's couch, there is a need to operate a television set or other display remotely from a personal computing device, such as a mobile phone. It also is desirable to allow a user to perform a general Web search to locate and

capture Web media, and to control a television or other display remotely using the personal computing device.

SUMMARY

[0005] Various aspects of the invention are set forth in the claims.

[0006] For example, according to one aspect, a system for presenting and controlling content on a display device includes a network, a server system coupled to the network and comprising one or more servers, a display device coupled to the network and having a display, and a personal computing device operable to transmit a first message according to a specified format over the network to the server system. The server system stores an association between the personal computing device and the display device. The first message identifies user-selected content and a media player to play the content. The server system is operable, in response to receiving the first message from the personal computing device, to provide to the display device a second message identifying the user-selected content and the media player to play the content. In response to receiving the second message, the display device is operable to obtain a first media player needed to play the content, to load the media player and to present the content on the display.

[0007] In some implementations, the display device is operable, in response to receiving the second message, to obtain the first media player from the content provider only if the first media player is not already loaded in the display device.

[0008] In some implementations, the personal computing device is operable to transmit a message according to a specified format over the network to the server system. The message can include a command for controlling playing of the content on the display device. The server system is operable, in response to receiving the message, to convert the command into a corresponding command recognizable by the media player if the command received from the personal computing

device is not recognizable by the media player. The server system is operable to provide to the display device a message that includes the corresponding command, and the display device is operable, in response to receiving the message from the server system, to execute the command.

[0009] In some implementations, the personal computing device is, for example, a mobile phone, and the display device is a television set. Other personal computing devices or display devices can be used in other implementations. The network can include, for example, the Internet.

[0010] In some implementations, the server system stores a look-up table that includes a synchronization code uniquely associated with the display device. A message from the personal computing device can include the synchronization code, and in response to receiving the message from personal computing device, the server system can use the synchronization code and the look-up table to identify the display device on which the content is to be played. The synchronization code can be different from an IP address associated with the display device and/or a media access control address associated with the display device.

[0011] In various implementations, the system can facilitate allowing a personal computing device to be used to select different content to be played on a remote display even if different media players are required to present the different content. The system also can allow the user to control how the content is displayed on the display device using the personal computing device. For example, user-initiated play commands can be passed from the user's personal computing device, through the server system, to the display devices.

[0012] Other aspects, features and advantages will be apparent from the following detailed description, the accompanying drawings, and the claims.

BRIEF DESCRIPTION OF THE FIGURES

[0013] The present technology is illustrated by way of example, and not by way of limitation, in the figures of the accompanying drawings.

[0014] FIG. 1 is a block diagram illustrating an example of a system according to the invention.

[0015] FIG. 2 illustrates various details of the flow of information and signals according to some implementations.

[0016] FIG. 3 illustrates an example of a transmission code incorporated into a message from a personal computing device.

[0017] FIG. 4 illustrates an example of a look-up table that forms part of a server system.

[0018] FIG. 5 illustrates an example of entries in a universal API adapter.

[0019] FIG. 6 is a flow chart showing steps for display device to load a video player and video.

[0020] FIG. 7A illustrates an example of a display device including a synchronization code.

[0021] FIG. 7B illustrates an example of a synchronization code look-up table.

[0022] FIGS. 8-13 illustrate examples of various scenarios in which the invention can be used.

[0023] FIGS. 14A through 14E illustrate examples of display screens that may appear on a user's personal computing device in accordance with the invention.

[0024] FIG. 15 illustrates further information that can be stored in the look-up table in the server system.

DETAILED DESCRIPTION

[0025] As shown in FIG. 1, a system 10 facilitates synchronizing a connection between two or more devices 20, 22 connected to the Internet 21 or other computer network. The connection is designed to be made by a first device (e.g., a personal computing device) 20 that acts as a controller and a second device (e.g., a television set 22 with a display 23) that acts as a receiver to play content selected by a user of the first device and to respond to commands that originate at the personal computing device. The personal computing device 20 is operable to display an application or web site that contains information and links to content providers 30 on the Internet 21. The television set 22 is operable to link back to a server system 24 from which the television set receives commands. When a user makes a selection using the personal computing device 20 for particular content to be displayed on the television display 23, a signal is sent through the Internet (or other network) 21 to the server system 24. A corresponding command signal then is passed along to the connected television set 22, which acts on a transmission code contained within the signal and performs specified commands. For example, in some scenarios, the command instructs the television set 22 to access a content provider 30 through the Internet 21, load a specific media player, load the media player-specific content (e.g., a video) and play the content on the television display 23. The user can use the personal computing device 20 to control how the content is played on the television display 23. The user may subsequently visit the same or another Web site using the personal computing device 20 to select different content (e.g., a second video) to be played on the television display 23. In that case, another signal would be sent through the server system 24 to the television set 22. A transmission code associated with this command signal instructs the television set 22 to load a new media player (if needed) over the Internet and to load the specified video file to be played on the display 23. Thus, the system 10 allows a personal computing device

20 to be used to select different content to be played on a remote display 23 even if different media players are required for the different content. The user also can control how the content is displayed (e.g., play, pause, stop, rewind, fast forward, etc.) on the display 23 using the personal computing device 20. The user-initiated play commands are passed from the user's personal computing device 20, through the server system 24, to the television set 22.

[0026] Although the following detailed discussion describes videos as an example of the type of content to be played on the display 23, the system 10 can be used for other types of content as well. Thus, depending on the implementation, the content may include one or more of the following: video, audio, interactive video game, streaming media, multimedia, images, slides (e.g., a PowerPoint presentation) or other types of dynamic content. Furthermore, in the following discussion, it is assumed that the personal computing device 20 is a mobile phone that includes a display, an internal microprocessor or other processing circuitry, a keypad, keyboard, touchscreen, mouse, trackball, or other device to receive user selections and other input, and a transceiver to establish communications to the Internet 21 or other communications networks. More generally, however, the personal computing device 20 can be any type of handheld or other Internet-enabled personal computing device, including personal computers, e-books, kiosks, tablets, smart phones, media players, and motion and touch sensory interfaces. In some cases, input from the user can be received in forms other than tactile input (e.g., acoustic or speech).

[0027] FIG. 2 illustrates further details of the flow of information and signals according to some implementations. The personal computing device (e.g., mobile phone) 20 is operable to display an application or web site that contains information and links to content providers 30 on the Internet 21. The user operates the mobile phone 20 so as to start the application or access the web site (block 100). In some implementations, a logo appears on the mobile phone's display. By

selecting the logo, the user causes a menu to expand and present various options. The options can include, for example: (i) add new content to a playlist, (ii) play a listed item on a secondary device, (iii) play a listed item on the mobile phone 20. If the user selects to add new content to the playlist, the user is presented with a screen that allows him to enter user-defined search parameters or o select predefined search parameters to request video data. The search parameters are sent from the mobile phone 20 as part of a request for video data that satisfy the search parameters (block 102). The request is transmitted via the Internet 21 and through the server system 24 to the appropriate content provider web site. In response, the content provider 30 provides metadata (e.g., titles, links to the videos) for one or more video files that satisfy the search parameters (block 104). The metadata can be provided to the mobile phone 20, for example, in the form of an XML data file. Upon receiving the data file, the mobile phone 20 displays a list of one or more videos based on the information received from the content provider 30 (block 106).

[0028] If desired, the user can take one of several actions, including selecting one of the videos from the displayed list to be played on the television display 23 or initiating a command with respect to a video that already has been loaded to the television set 22 (block 108). The mobile phone 20 then formats and transmits a message to the server system 24 (block 110). The message from the mobile phone 20 contains a transmission code that includes data regarding the user information (e.g., user identification or account number), the secondary display it wants to connect to (e.g., television set 22 with display 23), the location and name of the media player for the selected video, the command (e.g., play, pause, rewind, etc.), and the video file to be acted upon. An example of the format of a transmission code from the mobile phone 20 to the server system 24 is illustrated in FIG. 3. Different formats and/or different information may be appropriate for other implementations.

[0029] The message from the mobile phone 20 is transmitted over the Internet 21 and is received by the server system 24 (block 112). Based on information in the message from the mobile phone 20, the server system 24 verifies that the user has an account (block 114), and the contents of the message, as well as the date and time of receipt of the message, are added to a personal computing device database 32 (block 116) which forms part of a switchboard 28. In general, all messages from a particular user's personal computing device 20 are stored in the database 32 corresponding to an account for the particular user. Thus, the database 32 stores a record of all messages received from a user's personal computing device 20, as well as the user's identification, an indication of the target device 22, an identification of the media player that is required for the selected video, and an identification of the selected video.

[0030] The switchboard 28 also includes a look-up table 34 that stores a correspondence between a particular personal computing device (such as mobile phone 20) and target devices (e.g., the television set 22) to which the user command is directed. An example of the look-up table 28 is illustrated in FIG. 4. In this example, it is assumed that, at most, a single connection is established at any given time between a particular mobile phone and a display device. However, as explained below, other scenarios are also possible to establish group connections (e.g., multiple mobile phones connected to the same display device). The server system 24 performs a target verification (block 118), which includes checking whether a connection to a particular display device already is established for the mobile phone 20 and, if so, checking the identification of the display device. During the target verification, if the look-up table indicates that there is no connection established between the mobile phone 20 and a particular display device, then the server system 24 sends a message to the mobile phone 20 to prompt the user to identify the device on which the video is to be displayed.

[0031] A user can identify the device on which the video is to be displayed in one of several ways, depending on the implementation. In some implementations, the user can select the display device from a list of devices displayed on the mobile phone 20. The list can include a field populated with names or identifications of display devices that previously have been initialized for connection. Alternatively, the user can select the display device by entering a synchronization code uniquely associated with the particular display device. As illustrated in FIG. 7A, the synchronization code 48 can be displayed, for example, on a splash page of the display device as text on the screen or as an image such as a QR code and can be entered into the mobile phone 20, for example, manually by the user or by scanning the code into the mobile phone. The code can be scanned, for example, using optical scanning or RFID techniques. Preferably, the synchronization code is different from the IP address associated with the device 22. The IP address also can be different from the media access control (MAC) address associated with the device 22. For example, in some implementations, the synchronization code is generated randomly and assigned to the display device 22 each time it connects to the server system 24. Thus, a particular display device 22 may have an IP address, a MAC address, a web or browser cookie, and a synchronization code ("sync code") assigned to it at any given time. This information can be stored, for example, in a look-up table in the server system 24. An example of entries in such a look-up table are illustrated in FIG. 7B.

[0032] Once the synchronization code is entered into, or captured by, the mobile phone 20, it is sent from the mobile phone 20 to the server system 24, which stores the information in the look-up table 36 so as to establish a connection between the mobile phone 20 and the display device 22 through the server system 24.

[0033] Once a connection is established between the mobile phone 20 and the display device 22, signals sent from the mobile device 20 to its associated database 32 are copied to a database 34 associated with the target device (e.g., television set 24) based on the correspondence between the mobile device and the target device listed in the look-up table 36 (block 122). Thus, the database 32 entries associated with a particular display device (e.g., television set 24) provide a record of the messages received for that display device, as well as an indication of the identification of the device that sent each message, an indication of the media player required to play the video, and an indication of the selected video.

[0034] In the illustrated implementation, the command in the transmission code (see FIG. 3) contains a JavaScript reference to control the media player needed to play the selected video. Various types of video players may use different JavaScript commands to control their respective playback. Therefore, in the illustrated implementation, a universal adapter 26 is provided to interpret and convert a standard or universal command (e.g., play, pause, etc.) into the specific command recognized by the media player. Each time a signal is received from the mobile device 20, the API adapter 26 checks and identifies the specific media player that is being requested. Based on this information, the system loads the appropriate set of protocols or application programming interfaces (APIs) from its library and converts the incoming commands from the mobile device 20 into the correct JavaScript (or other programming) code used by the target device 22 to control the specific player (block 120). The server system 24 then copies the converted version of the message to the database 34 associated with the target device 22, as indicated above in connection with block 122.

[0035] The universal adapter 26 can be implemented, for example, as a look-up table. Examples of entries in such a look-up table are illustrated in FIG. 5. Thus, for a universal command

"New Video," the universal adapter 26 provides the corresponding command for each of several specific media players (e.g., "yt_loadVideo" for YouTube). Similarly, for a universal command "Pause," the universal adapter 26 provides the corresponding command for each of several specific media players (e.g., "pauseVideo" for Ted.com). Other universal commands and the corresponding command(s) for one of more media players also can be stored by the universal adapter 26.

[0036] The display device 22 periodically checks the entries in the database 34 to determine if there are any new messages/commands directed to it (block 124). For example, in some implementations, the display device 22 polls the associated database 34 at some predetermined time interval. In some implementations, instead of the display device 22 periodically checking whether there are any messages for it in the database 34, the server system 24 can push the messages to the display device 22. In any event, the system is arranged so that the display device 22 receives the messages intended for it.

[0037] When the display device 22 receives a message from the server system 24 (block 126), the display device executes the message (block 128). In some cases, the media player required to play the video indicated in the message is not presently loaded in the display device 22. For example, the received command may be to "play" a particular video. As indicated by FIG. 6, if the media player needed to play the video is not already loaded in the display device 22, the display device 22 requests and obtains a copy of the appropriate media player 40 and a copy of the video file 42 from a content provider 30, loads the media player and then presents the video on the display 23 (FIG. 2, block 130). Likewise, as indicated by FIG. 6, if the appropriate media player already is loaded in the display device, but the particular video is not, then the display device 22 requests and obtains a copy of the video file 42 from the content provider 30 and proceeds to play the video. To allow the display device 22 to switch between different video players (i.e., to load

and unload different video players), a software program can be stored on the display device and/or the web site to establish a secure connection back to the server system 24.

[0038] Once the video is playing on the display device 22, the user of the mobile phone 20 can control the playing of the video by entering appropriate commands (e.g., pause, fast forward, rewind, stop, play, etc.) through the mobile phone. Each command is incorporated into a message including a transmission code (FIG. 3) as described above. The message is transmitted to the server system 24, which copies the message into database entries associated with the particular display device 22 (i.e., after performing any conversion of the command by the API adapter 26). Once the message is retrieved by or sent to the display device 22, the display device proceeds to execute the command.

[0039] The system and methods described here allow a user of a mobile phone or other personal computing device to create a playlist based on videos (or other types of content) from multiple sources and to play back each video using a single interface that can be used to control different media players.

[0040] As mentioned above, the system and methods described above also can be used with types of content other than video. In that case, different types of user-initiated commands may be available to control the content displayed on the display 23. For example, for interactive video games, the user-initiated commands can include control commands appropriate for the particular game.

[0041] Although the implementation of FIG. 1 illustrates the display device 22 as a television set with a display screen 23, other types of display devices can be used as well (e.g., a laptop or personal computer).

[0042] The systems and methods can be used in various scenarios to play back videos (or other content). Examples of several scenarios that can be implemented using the system described above are described in the following paragraphs. For example, a first scenario involves a single user's smartphone connecting to a single display device (FIG. 8). In this scenario, the user turns on, for example, her display device (e.g., personal computer with a display monitor), opens up a browser and accesses a website associated with the server system 24. The user then clicks on a link that launches the software program to establish a secure connection back to the server system 24. The software program opens a splash page (see FIG. 14A), and a sync-code is displayed on the monitor. The user then opens the appropriate application on her smartphone. In the smartphone application, the user accesses a "Connect" screen from which he can select one of several listed display devices (see FIG. 14B). Alternatively, the user can enter the sync-code displayed on the computer monitor (see FIG. 14B). The user then clicks on a SEND button which causes a message including the sync-code to be sent the server system 24. In response, the server system 24 establishes a connection between the user's smartphone and the selected display device through a look-up table as described above with respect to FIG. 4. The user can use a search tool in the smartphone application to find a video. In response to the search, a list of videos satisfying the search appears on the smartphone (see FIG. 14C). When the user selects a video from the list displayed on the smartphone, the information is provided through the server system 24 to the personal computer. In some implementations, a pop-up window may appear on the smartphone listing one or more options for the user to take regarding the selected video. Such options can include, for example, play the video on the selected display device (e.g., the personal computer), play the video on the smartphone, or add the video to the playlist on the smartphone. If the user chooses to have the video played on the display device (e.g., the personal computer), the personal

computer obtains a copy of the required video player and the selected video from an appropriate content provider over the Internet and begins to play the video on the monitor as described previously. In some implementations, a message is displayed on the user's smartphone indicating that the selected video is playing and providing additional information about the selected video (see FIG. 14D). The user can control playing of the video (e.g., pause, fast forward, rewind, play, etc.) from her smartphone.

[0043] A second scenario involves saving a selected video to a playlist on a single user's smartphone, and subsequently playing the video on a display device (FIG. 9). In this scenario, the user opens the appropriate application on his smartphone and searches for videos using the search tool displayed in the application. When a list of videos is displayed on the smartphone in response to the search request, the user selects one or more videos to add to his playlist. At that time, or at a later time, the user can connect to a display device through the server system 24. To do so, the user opens the playlist on his smartphone and selects a video. The information is provided through the server system 24 to the display device, which obtains a copy of the required video player and the selected video from an appropriate content provider over the Internet and begins to play the video. The user can control playing of the video (e.g., pause, fast forward, rewind, play, etc.) from his smartphone.

[0044] A third scenario involves multiple users' smartphones and a single display device (FIG. 10). For example, a user may want to share and watch videos with a group of friends watching together on a single display device. In this situation, the user can access the application or web site to set up a group and serve as the moderator for the group. The user then can send out a request to other members of the group, or other users can send a request to the moderator to join the group. Users can search for other users based, for example, on username or from a contact list.

The moderator then can select a user in the group to control the display device. FIG. 14E illustrates an example of a screen on the user's smartphone that allows the user to connect with other users to form a group and to select which member of the group controls the display device (e.g., by selecting a member of the group from the list "Me, Guest 1, Guest 2, . . . " near the top of the screen). Alternatively, the moderator can set it up so that control is passed to each member of the group in turn automatically, or so that the next turn can be determined by consensus of the entire group, via some form of voting. Regardless of who has control of the display device 22, each user in the group retains control of his own smartphone. The look-up table 36 in the server system 24 stores the connections established between the personal computing devices of the users in the group and the display device (see FIG. 15).

[0045] A fourth scenario involves one user's smartphone and multiple display devices (FIG. 11). In this example, a user opens the application on his smartphone to establish a connection to a first display device and then repeats the process for multiple display devices. A list of devices that the user's smartphone is connected to is displayed on the smartphone. The user can choose to control all devices simultaneously or one at a time. To do so, the user selects from the list the display device(s) he wants to control. The user then can search for videos using his smartphone. In response to the user selecting a particular video, the selected video is played on the selected display device(s).

[0046] A fifth scenario involves multiple users' smartphones and multiple connected display devices (FIG. 12). For example, a user may want to share and watch videos with a group of friends, who may be in different locations each of which has a separate display device. Each user establishes a connection from her smartphone to the display device where she is located. One of the users uses the application or web site to establish a group, with the user who establishes the

group serving as the group moderator. The user can send out a request to other users to join the group or other users can send a request to the moderator to join the group. In some implementations, users can search for other users based on username or from a contact list. The moderator chooses which member of the group has control of the display device. Alternatively, the moderator can set it up control is passed to each member of the group in turn automatically, or so that the next turn can be determined by consensus of the entire group, via some form of voting. The signal sent from the smartphone of the group member who has control is sent (via the server system 24) to all display devices within the group. Regardless of which group member has control of the display devices, each user retains control of her own smartphone. The look-up table 36 in the server system 24 stores the connections established between the personal computing devices of the users in the group and the display devices (see FIG. 15).

[0047] A sixth scenario involves sharing video links and a playlist (FIG. 13). For example, a user within a group can share a video playlist and video links via an Instant messaging system built-in to the application. Users also can post video links or a video playlist to third-party web sites (e.g., social networking sites). Other users can view the video link and playlist within the application. When a video from the list is selected, it plays on the selected device.

[0048] The system and methods can be used by a wide variety of users in addition to individual viewers. For example, companies that provide on-line video platforms that host videos for other individuals or companies can obtain useful advantages by integrating the platforms with the server system 24. Programming hooks can be created in the API so that the on-line video platform's media player can communicate with the server system 24. When media player commands for an on-line video platform are added to the system 24, the media player's API is placed in an API library and is stored in the API adapter 26. The on-line video platform can then

offer customers the ability to add videos to their own mobile web sites that are enabled to operate with the server system 24.

[0049] The system and methods also can be used by content providers. For example, the content provider may want to deliver its media on-line. The content provider can use an on-line video platform that is enabled to operate with the server system 24. In some implementations, the content provider is allowed to add links to videos for that web site (i.e., mobile site or an application). The link facilitates synchronization to the secondary device 22 (e.g., a television set) and allows the end-user to load and control the video on the secondary device.

[0050] As used in this disclosure, terms such as "first," "second," etc. with respect to the messages are used simply as labels to distinguish the various messages from one another. Such terms do not imply that there cannot be any other messages prior to the first message or that there cannot be other messages between the first and second messages.

[0051] Implementations of the subject matter and the operations described in this specification can include digital electronic circuitry, or in computer software, firmware, or hardware, including the structures disclosed in this specification and their structural equivalents, or in combinations of one or more of them. Implementations of the subject matter described in this specification can include one or more computer programs, i.e., one or more modules of computer program instructions, encoded on computer storage medium for execution by, or to control the operation of, data processing apparatus. Alternatively or in addition, the program instructions can be encoded on an artificially-generated propagated signal, e.g., a machine-generated electrical, optical, or electromagnetic signal that is generated to encode information for transmission to suitable receiver apparatus for execution by a data processing apparatus. A computer storage medium can be, or can be included in, a computer-readable storage device, a computer-readable

storage substrate, a random or serial access memory array or device, or a combination of one or more of them. Moreover, while a computer storage medium is not a propagated signal, a computer storage medium can be a source or destination of computer program instructions encoded in an artificially-generated propagated signal. The computer storage medium can also be, or be included in, one or more separate physical components or media (e.g., multiple CDs, disks, or other storage devices).

[0052] The operations described in this specification can include operations performed by a data processing apparatus on data stored on one or more computer-readable storage devices or received from other sources. The term "data processing apparatus" encompasses all kinds of apparatus, devices, and machines for processing data, including by way of example a programmable processor, a computer, a system on a chip, or multiple ones, or combinations, of the foregoing. The apparatus and execution environment can realize various different computing model infrastructures, such as web services, distributed computing and grid computing infrastructures.

[0053] A computer program (also known as a program, software, software application, script, or code) can be written in any form of programming language, including compiled or interpreted languages, declarative or procedural languages, and it can be deployed in any form, including as a stand-alone program or as a module, component, subroutine, object, or other unit suitable for use in a computing environment. A computer program may, but need not, correspond to a file in a file system. A program can be stored in a portion of a file that holds other programs or data (e.g., one or more scripts stored in a markup language document), in a single file dedicated to the program in question, or in multiple coordinated files (e.g., files that store one or more modules, sub-programs, or portions of code). A computer program can be deployed to be executed

on one computer or on multiple computers that are located at one site or distributed across multiple sites and interconnected by a communication network.

[0054] Processors suitable for the execution of a computer program include, by way of example, both general and special purpose microprocessors, and any one or more processors of any kind of digital computer. Generally, a processor will receive instructions and data from a read-only memory or a random access memory or both. Elements of a computer include a processor for performing actions in accordance with instructions and one or more memory devices for storing instructions and data.

[0055] Generally, a computer will also include, or be operatively coupled to receive data from or transfer data to, or both, one or more mass storage devices for storing data, e.g., magnetic, magneto-optical disks, or optical disks. However, a computer need not have such devices. Moreover, a computer can be embedded in another device, e.g., a mobile telephone, a personal digital assistant (PDA), a mobile, audio or video player, a game console, a Global Positioning System (GPS) receiver, or a portable storage device (e.g., a universal serial bus (USB) flash drive), to name just a few. Devices suitable for storing computer program instructions and data include all forms of non-volatile memory, media and memory devices, including by way of example semiconductor memory devices, e.g., EPROM, EEPROM, and flash memory devices; magnetic disks, e.g., internal hard disks or removable disks; magneto-optical disks; and CD-ROM and DVD-ROM disks. The processor and the memory can be supplemented by, or incorporated in, special purpose logic circuitry.

[0056] Although this specification contains many specific implementation details, these should not be construed as limitations on the scope of any inventions or of what may be claimed, but rather as descriptions of features specific to particular implementations of particular inventions.

Certain features that are described in this specification in the context of separate implementations can also be implemented in combination in a single implementation. Conversely, various features that are described in the context of a single implementation can also be implemented in multiple implementations separately or in any suitable subcombination. Moreover, although features may be described above as acting in certain combinations and even initially claimed as such, one or more features from a claimed combination can in some cases be excised from the combination, and the claimed combination may be directed to a subcombination or variation of a subcombination.

[0057] Similarly, while operations are depicted in the drawings in a particular order, this should not be understood as requiring that such operations be performed in the particular order shown or in sequential order, or that all illustrated operations be performed, to achieve desirable results. In certain circumstances, multitasking and parallel processing may be advantageous. Moreover, the separation of various system components in the implementations described herein and the attachments hereto should not be understood as requiring such separation in all implementations, and it should be understood that the described program components and systems can generally be integrated together in a single software product or packaged into multiple software products.

[0058] Thus, although particular implementations have been described, other implementations are within the scope of the claims.

PTO/AIA/14 (11-15)
Approved for use through 04/30/2017. OMB 0651-0032
U.S. Patent and Trademark Office; U.S. DEPARTMENT OF COMMERCE
Under the Paperwork Reduction Act of 1995, no persons are required to respond to a collection of information unless it contains a valid OMB control number.

Application Data Sheet 37 CFR 1.76	Attorney Docket Number	TSTH.278581
	Application Number	
Title of Invention	PLAY CONTROL OF CONTENT ON A DISPLAY DEVICE	

The application data sheet is part of the provisional or nonprovisional application for which it is being submitted. The following form contains the bibliographic data arranged in a format specified by the United States Patent and Trademark Office as outlined in 37 CFR 1.76.
This document may be completed electronically and submitted to the Office in electronic format using the Electronic Filing System (EFS) or the document may be printed and included in a paper filed application.

Secrecy Order 37 CFR 5.2:

☐ Portions or all of the application associated with this Application Data Sheet may fall under a Secrecy Order pursuant to 37 CFR 5.2 (Paper filers only. Applications that fall under Secrecy Order may not be filed electronically.)

Inventor Information:

Inventor 1 Remove

Legal Name

Prefix	Given Name	Middle Name	Family Name	Suffix
	David		Strober	

Residence Information (Select One) ● US Residency Non US Residency Active US Military Service

City	Rye	State/Province	NY	Country of Residence i	US

Mailing Address of Inventor:

Address 1	6 Davis Avenue B22		
Address 2			
City	Rye	State/Province	NY
Postal Code	10580	Country i	US

All Inventors Must Be Listed - Additional Inventor Information blocks may be generated within this form by selecting the **Add** button. Add

Correspondence Information:

Enter either Customer Number or complete the Correspondence Information section below.
For further information see 37 CFR 1.33(a).

☐ **An Address is being provided for the correspondence Information of this application.**

Customer Number	149550		
Email Address	ipdocket@shb.com	Add Email	Remove Email
Email Address	kbae@shb.com	Add Email	Remove Email

Application Information:

Title of the Invention	PLAY CONTROL OF CONTENT ON A DISPLAY DEVICE		
Attorney Docket Number	TSTH.278581	Small Entity Status Claimed	☒
Application Type	Nonprovisional		
Subject Matter	Utility		
Total Number of Drawing Sheets (if any)	9	Suggested Figure for Publication (if any)	2

Under the Paperwork Reduction Act of 1995, no persons are required to respond to a collection of information unless it contains a valid OMB control number.

Application Data Sheet 37 CFR 1.76	Attorney Docket Number	TSTH.278581
	Application Number	
Title of Invention	PLAY CONTROL OF CONTENT ON A DISPLAY DEVICE	

Filing By Reference:

Only complete this section when filing an application by reference under 35 U.S.C. 111(c) and 37 CFR 1.57(a). Do not complete this section if application papers including a specification and any drawings are being filed. Any domestic benefit or foreign priority information must be provided in the appropriate section(s) below (i.e., "Domestic Benefit/National Stage Information" and "Foreign Priority Information").

For the purposes of a filing date under 37 CFR 1.53(b), the description and any drawings of the present application are replaced by this reference to the previously filed application, subject to conditions and requirements of 37 CFR 1.57(a).

Application number of the previously filed application	Filing date (YYYY-MM-DD)	Intellectual Property Authority or Country

Publication Information:

☐ Request Early Publication (Fee required at time of Request 37 CFR 1.219)

☐ **Request Not to Publish.** I hereby request that the attached application not be published under 35 U.S.C. 122(b) and certify that the invention disclosed in the attached application **has not and will not** be the subject of an application filed in another country, or under a multilateral international agreement, that requires publication at eighteen months after filing.

Representative Information:

Representative information should be provided for all practitioners having a power of attorney in the application. Providing this information in the Application Data Sheet does not constitute a power of attorney in the application (see 37 CFR 1.32).
Either enter Customer Number or complete the Representative Name section below. If both sections are completed the customer Number will be used for the Representative Information during processing.

Please Select One:	● Customer Number	US Patent Practitioner	◯ Limited Recognition (37 CFR 11.9)
Customer Number	149550		

Domestic Benefit/National Stage Information:

This section allows for the applicant to either claim benefit under 35 U.S.C. 119(e), 120, 121, 365(c), or 386(c) or indicate National Stage entry from a PCT application. Providing benefit claim information in the Application Data Sheet constitutes the specific reference required by 35 U.S.C. 119(e) or 120, and 37 CFR 1.78.
When referring to the current application, please leave the "Application Number" field blank.

Prior Application Status	Pending		Remove
Application Number	Continuity Type	Prior Application Number	Filing or 371(c) Date (YYYY-MM-DD)
	Continuation of	13532546	2012-06-25

Application Data Sheet 37 CFR 1.76	Attorney Docket Number	TSTH.278581
	Application Number	
Title of Invention	PLAY CONTROL OF CONTENT ON A DISPLAY DEVICE	

Prior Application Status	Patented				Remove
Application Number	Continuity Type	Prior Application Number	Filing Date (YYYY-MM-DD)	Patent Number	Issue Date (YYYY-MM-DD)
13532546	Continuation in part of	13157821	2011-06-10	8904289	2014-12-02
Prior Application Status	Expired				Remove
Application Number	Continuity Type	Prior Application Number	Filing or 371(c) Date (YYYY-MM-DD)		
13157821	Claims benefit of provisional	61477998	2011-04-21		

Additional Domestic Benefit/National Stage Data may be generated within this form by selecting the **Add** button. Add

Foreign Priority Information:

This section allows for the applicant to claim priority to a foreign application. Providing this information in the application data sheet constitutes the claim for priority as required by 35 U.S.C. 119(b) and 37 CFR 1.55. When priority is claimed to a foreign application that is eligible for retrieval under the priority document exchange program (PDX)[i] the information will be used by the Office to automatically attempt retrieval pursuant to 37 CFR 1.55(i)(1) and (2). Under the PDX program, applicant bears the ultimate responsibility for ensuring that a copy of the foreign application is received by the Office from the participating foreign intellectual property office, or a certified copy of the foreign priority application is filed, within the time period specified in 37 CFR 1.55(g)(1).

Remove

Application Number	Country[i]	Filing Date (YYYY-MM-DD)	Access Code[i] (if applicable)

Additional Foreign Priority Data may be generated within this form by selecting the **Add** button. Add

Statement under 37 CFR 1.55 or 1.78 for AIA (First Inventor to File) Transition Applications

☐ This application (1) claims priority to or the benefit of an application filed before March 16, 2013 and (2) also contains, or contained at any time, a claim to a claimed invention that has an effective filing date on or after March 16, 2013.
NOTE: By providing this statement under 37 CFR 1.55 or 1.78, this application, with a filing date on or after March 16, 2013, will be examined under the first inventor to file provisions of the AIA.

Application Data Sheet 37 CFR 1.76	Attorney Docket Number	TSTH.278581
	Application Number	
Title of Invention	PLAY CONTROL OF CONTENT ON A DISPLAY DEVICE	

Authorization or Opt-Out of Authorization to Permit Access:

When this Application Data Sheet is properly signed and filed with the application, applicant has provided written authority to permit a participating foreign intellectual property (IP) office access to the instant application-as-filed (see paragraph A in subsection 1 below) and the European Patent Office (EPO) access to any search results from the instant application (see paragraph B in subsection 1 below).

Should applicant choose not to provide an authorization identified in subsection 1 below, applicant **must opt-out** of the authorization by checking the corresponding box A or B or both in subsection 2 below.

NOTE: This section of the Application Data Sheet is **ONLY** reviewed and processed with the **INITIAL** filing of an application. After the initial filing of an application, an Application Data Sheet cannot be used to provide or rescind authorization for access by a foreign IP office(s). Instead, Form PTO/SB/39 or PTO/SB/69 must be used as appropriate.

1. Authorization to Permit Access by a Foreign Intellectual Property Office(s)

A. Priority Document Exchange (PDX) - Unless box A in subsection 2 (opt-out of authorization) is checked, the undersigned hereby **grants the USPTO authority** to provide the European Patent Office (EPO), the Japan Patent Office (JPO), the Korean Intellectual Property Office (KIPO), the State Intellectual Property Office of the People's Republic of China (SIPO), the World Intellectual Property Organization (WIPO), and any other foreign intellectual property office participating with the USPTO in a bilateral or multilateral priority document exchange agreement in which a foreign application claiming priority to the instant patent application is filed, access to: (1) the instant patent application-as-filed and its related bibliographic data, (2) any foreign or domestic application to which priority or benefit is claimed by the instant application and its related bibliographic data, and (3) the date of filing of this Authorization. See 37 CFR 1.14(h)(1).

B. Search Results from U.S. Application to EPO - Unless box B in subsection 2 (opt-out of authorization) is checked, the undersigned hereby **grants the USPTO authority** to provide the EPO access to the bibliographic data and search results from the instant patent application when a European patent application claiming priority to the instant patent application is filed. See 37 CFR 1.14(h)(2).

The applicant is reminded that the EPO's Rule 141(1) EPC (European Patent Convention) requires applicants to submit a copy of search results from the instant application without delay in a European patent application that claims priority to the instant application.

2. Opt-Out of Authorizations to Permit Access by a Foreign Intellectual Property Office(s)

☐ A. Applicant **DOES NOT** authorize the USPTO to permit a participating foreign IP office access to the instant application-as-filed. If this box is checked, the USPTO will not be providing a participating foreign IP office with any documents and information identified in subsection 1A above.

☐ B. Applicant **DOES NOT** authorize the USPTO to transmit to the EPO any search results from the instant patent application. If this box is checked, the USPTO will not be providing the EPO with search results from the instant application.

NOTE: Once the application has published or is otherwise publicly available, the USPTO may provide access to the application in accordance with 37 CFR 1.14.

Under the Paperwork Reduction Act of 1995, no persons are required to respond to a collection of information unless it contains a valid OMB control number.

Application Data Sheet 37 CFR 1.76	Attorney Docket Number	TSTH.278581
	Application Number	
Title of Invention	PLAY CONTROL OF CONTENT ON A DISPLAY DEVICE	

Applicant Information:

Providing assignment information in this section does not substitute for compliance with any requirement of part 3 of Title 37 of CFR to have an assignment recorded by the Office.

Applicant 1 Remove

If the applicant is the inventor (or the remaining joint inventor or inventors under 37 CFR 1.45), this section should not be completed. The information to be provided in this section is the name and address of the legal representative who is the applicant under 37 CFR 1.43; or the name and address of the assignee, person to whom the inventor is under an obligation to assign the invention, or person who otherwise shows sufficient proprietary interest in the matter who is the applicant under 37 CFR 1.46. If the applicant is an applicant under 37 CFR 1.46 (assignee, person to whom the inventor is obligated to assign, or person who otherwise shows sufficient proprietary interest) together with one or more joint inventors, then the joint inventor or inventors who are also the applicant should be identified in this section.

Clear

● Assignee	Legal Representative under 35 U.S.C. 117	Joint Inventor
Person to whom the inventor is obligated to assign.	Person who shows sufficient proprietary interest	

If applicant is the legal representative, indicate the authority to file the patent application, the inventor is:

Name of the Deceased or Legally Incapacitated Inventor:

If the Applicant is an Organization check here. ☒

Organization Name	Touchstream Technologies, Inc.		
Mailing Address Information For Applicant:			
Address 1	3 Broadway		
Address 2			
City	Valhalla	**State/Province**	NY
Country	US	Postal Code	10595
Phone Number		Fax Number	
Email Address			

Additional Applicant Data may be generated within this form by selecting the Add button. Add

Assignee Information including Non-Applicant Assignee Information:

Providing assignment information in this section does not substitute for compliance with any requirement of part 3 of Title 37 of CFR to have an assignment recorded by the Office.

Application Data Sheet 37 CFR 1.76	Attorney Docket Number	TSTH.278581
	Application Number	
Title of Invention	PLAY CONTROL OF CONTENT ON A DISPLAY DEVICE	

Assignee 1

Complete this section if assignee information, including non-applicant assignee information, is desired to be included on the patent application publication. An assignee-applicant identified in the "Applicant Information" section will appear on the patent application publication as an applicant. For an assignee-applicant, complete this section only if identification as an assignee is also desired on the patent application publication.

Remove

If the Assignee or Non-Applicant Assignee is an Organization check here. ☐

Prefix	**Given Name**	Middle Name	**Family Name**	Suffix

Mailing Address Information For Assignee including Non-Applicant Assignee:

Address 1			
Address 2			
City		**State/Province**	
Country i		Postal Code	
Phone Number		Fax Number	
Email Address			

Additional Assignee or Non-Applicant Assignee Data may be generated within this form by selecting the Add button. Add

Signature:

Remove

NOTE: This Application Data Sheet must be signed in accordance with 37 CFR 1.33(b). **However, if this Application Data Sheet is submitted with the INITIAL filing of the application and either box A or B is not checked in subsection 2 of the "Authorization or Opt-Out of Authorization to Permit Access" section, then this form must also be signed in accordance with 37 CFR 1.14(c).**

This Application Data Sheet **must** be signed by a patent practitioner if one or more of the applicants is a **juristic entity** (e.g., corporation or association). If the applicant is two or more joint inventors, this form must be signed by a patent practitioner, **all** joint inventors who are the applicant, or one or more joint inventor-applicants who have been given power of attorney (e.g., see USPTO Form PTO/AIA/81) on behalf of **all** joint inventor-applicants.

See 37 CFR 1.4(d) for the manner of making signatures and certifications.

Signature	/KEITH J. BAE/			Date (YYYY-MM-DD)	2017-08-25
First Name	Keith	Last Name	Bae	Registration Number	64633

Additional Signature may be generated within this form by selecting the Add button. Add

Application Data Sheet 37 CFR 1.76	Attorney Docket Number	TSTH.278581
	Application Number	
Title of Invention	PLAY CONTROL OF CONTENT ON A DISPLAY DEVICE	

This collection of information is required by 37 CFR 1.76. The information is required to obtain or retain a benefit by the public which is to file (and by the USPTO to process) an application. Confidentiality is governed by 35 U.S.C. 122 and 37 CFR 1.14. This collection is estimated to take 23 minutes to complete, including gathering, preparing, and submitting the completed application data sheet form to the USPTO. Time will vary depending upon the individual case. Any comments on the amount of time you require to complete this form and/or suggestions for reducing this burden, should be sent to the Chief Information Officer, U.S. Patent and Trademark Office, U.S. Department of Commerce, P.O. Box 1450, Alexandria, VA 22313-1450. DO NOT SEND FEES OR COMPLETED FORMS TO THIS ADDRESS. **SEND TO: Commissioner for Patents, P.O. Box 1450, Alexandria, VA 22313-1450.**

Privacy Act Statement

The Privacy Act of 1974 (P.L. 93-579) requires that you be given certain information in connection with your submission of the attached form related to a patent application or patent. Accordingly, pursuant to the requirements of the Act, please be advised that: (1) the general authority for the collection of this information is 35 U.S.C. 2(b)(2); (2) furnishing of the information solicited is voluntary; and (3) the principal purpose for which the information is used by the U.S. Patent and Trademark Office is to process and/or examine your submission related to a patent application or patent. If you do not furnish the requested information, the U.S. Patent and Trademark Office may not be able to process and/or examine your submission, which may result in termination of proceedings or abandonment of the application or expiration of the patent.

The information provided by you in this form will be subject to the following routine uses:

1 The information on this form will be treated confidentially to the extent allowed under the Freedom of Information Act (5 U.S.C. 552) and the Privacy Act (5 U.S.C. 552a). Records from this system of records may be disclosed to the Department of Justice to determine whether the Freedom of Information Act requires disclosure of these records.

2. A record from this system of records may be disclosed, as a routine use, in the course of presenting evidence to a court, magistrate, or administrative tribunal, including disclosures to opposing counsel in the course of settlement negotiations.

3 A record in this system of records may be disclosed, as a routine use, to a Member of Congress submitting a request involving an individual, to whom the record pertains, when the individual has requested assistance from the Member with respect to the subject matter of the record.

4. A record in this system of records may be disclosed, as a routine use, to a contractor of the Agency having need for the information in order to perform a contract. Recipients of information shall be required to comply with the requirements of the Privacy Act of 1974, as amended, pursuant to 5 U.S.C. 552a(m).

5. A record related to an International Application filed under the Patent Cooperation Treaty in this system of records may be disclosed, as a routine use, to the International Bureau of the World Intellectual Property Organization, pursuant to the Patent CooperationTreaty.

6. A record in this system of records may be disclosed, as a routine use, to another federal agency for purposes of National Security review (35 U.S.C. 181) and for review pursuant to the Atomic Energy Act (42 U.S.C. 218(c)).

7. A record from this system of records may be disclosed, as a routine use, to the Administrator, General Services, or his/her designee, during an inspection of records conducted by GSA as part of that agency's responsibility to recommend improvements in records management practices and programs, under authority of 44 U.S.C. 2904 and 2906. Such disclosure shall be made in accordance with the GSA regulations governing inspection of records for this purpose, and any other relevant (i.e., GSA or Commerce) directive. Such disclosure shall not be used to make determinations about individuals.

8. A record from this system of records may be disclosed, as a routine use, to the public after either publication of the application pursuant to 35 U.S.C. 122(b) or issuance of a patent pursuant to 35 U.S.C. 151. Further, a record may be disclosed, subject to the limitations of 37 CFR 1.14, as a routine use, to the public if the record was filed in an application which became abandoned or in which the proceedings were terminated and which application is referenced by either a published application, an application open to public inspections or an issued patent.

9. A record from this system of records may be disclosed, as a routine use, to a Federal, State, or local law enforcement agency, if the USPTO becomes aware of a violation or potential violation of law or regulation.

Electronic Patent Application Fee Transmittal

Application Number:	
Filing Date:	
Title of Invention:	PLAY CONTROL OF CONTENT ON A DISPLAY DEVICE
First Named Inventor/Applicant Name:	David Strober
Filer:	Keith Joshua Bae/Traci Burke
Attorney Docket Number:	TSTH.278581

Filed as Small Entity

Filing Fees for Utility under 35 USC 111(a)

Description	Fee Code	Quantity	Amount	Sub-Total in USD($)
Basic Filing:				
UTILITY FILING FEE (ELECTRONIC FILING)	4011	1	70	70
UTILITY SEARCH FEE	2111	1	300	300
UTILITY EXAMINATION FEE	2311	1	360	360
Pages:				
Claims:				
Miscellaneous-Filing:				
Petition:				
Patent-Appeals-and-Interference:				

Description	Fee Code	Quantity	Amount	Sub-Total in USD($)
Post-Allowance-and-Post-Issuance:				
Extension-of-Time:				
Miscellaneous:				
			Total in USD ($)	**730**

Electronic Acknowledgement Receipt	
EFS ID:	30190868
Application Number:	15687249
International Application Number:	
Confirmation Number:	4059
Title of Invention:	PLAY CONTROL OF CONTENT ON A DISPLAY DEVICE
First Named Inventor/Applicant Name:	David Strober
Customer Number:	149550
Filer:	Keith Joshua Bae/Traci Burke
Filer Authorized By:	Keith Joshua Bae
Attorney Docket Number:	TSTH.278581
Receipt Date:	25-AUG-2017
Filing Date:	
Time Stamp:	18:13:29
Application Type:	Utility under 35 USC 111(a)

Payment information:

Submitted with Payment	yes
Payment Type	CARD
Payment was successfully received in RAM	$730
RAM confirmation Number	082817INTEFSW18141700
Deposit Account	
Authorized User	
The Director of the USPTO is hereby authorized to charge indicated fees and credit any overpayment as follows:	

File Listing:

Document Number	Document Description	File Name	File Size(Bytes)/ Message Digest	Multi Part /.zip	Pages (if appl.)
1	Drawings-only black and white line drawings	TSTH_278581_Figures.pdf	2845255 986dc67a0c251f13c9bc5665a4ac1ce838f7d695	no	9
Warnings:					
Information:					
2	Oath or Declaration filed	TSTH_278581_Executed_Declaration.pdf	56399 8492fe0072e8c69ae33f208cfea04ad5efac3a0a	no	1
Warnings:					
Information:					
3		TSTH_278581_Continuation_Application.pdf	125437 f3ae5583f06a1704ab712d644673a5661aadcad9	yes	27

Multipart Description/PDF files in .zip description

Document Description	Start	End
Abstract	27	27
Claims	21	26
Specification	1	20

Warnings:					
Information:					
4	Application Data Sheet	TSTH_278581_ADS.pdf	1823188 b2a8ed6ebf9d80493bd960c49d1924ba45005c4d	no	8
Warnings:					
Information:					
5	Fee Worksheet (SB06)	fee-info.pdf	35244 d236d0465c231faff750ee0ac2cebdbf13627988	no	2

Warnings:	
Information:	
Total Files Size (in bytes):	4885523

This Acknowledgement Receipt evidences receipt on the noted date by the USPTO of the indicated documents, characterized by the applicant, and including page counts, where applicable. It serves as evidence of receipt similar to a Post Card, as described in MPEP 503.

New Applications Under 35 U.S.C. 111
If a new application is being filed and the application includes the necessary components for a filing date (see 37 CFR 1.53(b)-(d) and MPEP 506), a Filing Receipt (37 CFR 1.54) will be issued in due course and the date shown on this Acknowledgement Receipt will establish the filing date of the application.
National Stage of an International Application under 35 U.S.C. 371
If a timely submission to enter the national stage of an international application is compliant with the conditions of 35 U.S.C. 371 and other applicable requirements a Form PCT/DO/EO/903 indicating acceptance of the application as a national stage submission under 35 U.S.C. 371 will be issued in addition to the Filing Receipt, in due course.
New International Application Filed with the USPTO as a Receiving Office
If a new international application is being filed and the international application includes the necessary components for an international filing date (see PCT Article 11 and MPEP 1810), a Notification of the International Application Number and of the International Filing Date (Form PCT/RO/105) will be issued in due course, subject to prescriptions concerning national security, and the date shown on this Acknowledgement Receipt will establish the international filing date of the application.

Doc Code: PA..
Document Description: Power of Attorney

PTO/AIA/82A (07-13)
Approved for use through 01/31/2018. OMB 0651-0035
U.S. Patent and Trademark Office; U.S. DEPARTMENT OF COMMERCE
Under the Paperwork Reduction Act of 1995, no persons are required to respond to a collection of information unless it displays a valid OMB control number.

TRANSMITTAL FOR POWER OF ATTORNEY TO ONE OR MORE REGISTERED PRACTITIONERS

NOTE: This form is to be submitted with the Power of Attorney by Applicant form (PTO/AIA/82B) to identify the application to which the Power of Attorney is directed, in accordance with 37 CFR 1.5, unless the application number and filing date are identified in the Power of Attorney by Applicant form. If neither form PTO/AIA/82A nor form PTO/AIA82B identifies the application to which the Power of Attorney is directed, the Power of Attorney will not be recognized in the application.

Application Number	15/687,249
Filing Date	08/25/2017
First Named Inventor	DAVID STROBER
Title	PLAY CONTROL OF CONTENT ON A DISPLAY DEVICE
Art Unit	2611
Examiner Name	
Attorney Docket Number	TSTH.278581

SIGNATURE of Applicant or Patent Practitioner

Signature	/KEITH J. BAE/	Date (Optional)	08/28/2017
Name	Keith J. Bae	Registration Number	64633
Title (if Applicant is a juristic entity)			
Applicant Name (if Applicant is a juristic entity)			

NOTE: This form must be signed in accordance with 37 CFR 1.33. See 37 CFR 1.4(d) for signature requirements and certifications. If more than one applicant, use multiple forms.

☑ *Total of 1 forms are submitted.

This collection of information is required by 37 CFR 1.131, 1.32, and 1.33. The information is required to obtain or retain a benefit by the public which is to file (and by the USPTO to process) an application. Confidentiality is governed by 35 U.S.C. 122 and 37 CFR 1.11 and 1.14. This collection is estimated to take 3 minutes to complete, including gathering, preparing, and submitting the completed application form to the USPTO. Time will vary depending upon the individual case. Any comments on the amount of time you require to complete this form and/or suggestions for reducing this burden, should be sent to the Chief Information Officer, U.S. Patent and Trademark Office, U.S. Department of Commerce, P.O. Box 1450, Alexandria, VA 22313-1450. DO NOT SEND FEES OR COMPLETED FORMS TO THIS ADDRESS. **SEND TO: Commissioner for Patents, P.O. Box 1450, Alexandria, VA 22313-1450.**

If you need assistance in completing the form, call 1-800-PTO-9199 and select option 2.

Doc Code: PA..
Document Description: Power of Attorney

PTO/AIA/82B (07-13)
Approved for use through 01/31/2018. OMB 0651-0035
U.S. Patent and Trademark Office; U.S. DEPARTMENT OF COMMERCE
Under the Paperwork Reduction Act of 1995, no persons are required to respond to a collection of information unless it displays a valid OMB control number

POWER OF ATTORNEY BY APPLICANT

I hereby revoke all previous powers of attorney given in the application identified in either the attached transmittal letter or the boxes below.

Application Number	Filing Date

(Note: The boxes above may be left blank if information is provided on form PTO/AIA/82A.)

☑ I hereby appoint the Patent Practitioner(s) associated with the following Customer Number as my/our attorney(s) or agent(s), and to transact all business in the United States Patent and Trademark Office connected therewith for the application referenced in the attached transmittal letter (form PTO/AIA/82A) or identified above: 149550

OR

☐ I hereby appoint Practitioner(s) named in the attached list (form PTO/AIA/82C) as my/our attorney(s) or agent(s), and to transact all business in the United States Patent and Trademark Office connected therewith for the patent application referenced in the attached transmittal letter (form PTO/AIA/82A) or identified above. (Note: Complete form PTO/AIA/82C.)

Please recognize or change the correspondence address for the application identified in the attached transmittal letter or the boxes above to:

☑ The address associated with the above-mentioned Customer Number

OR

☐ The address associated with Customer Number:

OR

☐ Firm or Individual Name					
Address					
City		State		Zip	
Country					
Telephone		Email			

I am the Applicant (if the Applicant is a juristic entity, list the Applicant name in the box):

☐ Inventor or Joint Inventor (title not required below)

☐ Legal Representative of a Deceased or Legally Incapacitated Inventor (title not required below)

☑ Assignee or Person to Whom the Inventor is Under an Obligation to Assign (provide signer's title if applicant is a juristic entity)

☐ Person Who Otherwise Shows Sufficient Proprietary Interest (e.g., a petition under 37 CFR 1.46(b)(2) was granted in the application or is concurrently being filed with this document) (provide signer's title if applicant is a juristic entity)

SIGNATURE of Applicant for Patent

The undersigned (whose title is supplied below) is authorized to act on behalf of the applicant (e.g., where the applicant is a juristic entity).

Signature		Date (Optional)	7-7-2017
Name	Herb Mitschele		
Title	CEO, Touchstream Technologies, Inc.		

NOTE: Signature - This form must be signed by the applicant in accordance with 37 CFR 1.33. See 37 CFR 1.4 for signature requirements and certifications. If more than one applicant, use multiple forms.

☐ Total of forms are submitted.

This collection of information is required by 37 CFR 1.131, 1.32, and 1.33. The information is required to obtain or retain a benefit by the public which is to file (and by the USPTO to process) an application. Confidentiality is governed by 35 U.S.C. 122 and 37 CFR 1.11 and 1.14. This collection is estimated to take 3 minutes to complete, including gathering, preparing, and submitting the completed application form to the USPTO. Time will vary depending upon the individual case. Any comments on the amount of time you require to complete this form and/or suggestions for reducing this burden, should be sent to the Chief Information Officer, U.S. Patent and Trademark Office, U.S. Department of Commerce, P.O. Box 1450, Alexandria, VA 22313-1450. DO NOT SEND FEES OR COMPLETED FORMS TO THIS ADDRESS. **SEND TO: Commissioner for Patents, P.O. Box 1450, Alexandria, VA 22313-1450.**

If you need assistance in completing the form, call 1-800-PTO-9199 and select option 2.

Electronic Acknowledgement Receipt

EFS ID:	30194508
Application Number:	15687249
International Application Number:	
Confirmation Number:	4059
Title of Invention:	PLAY CONTROL OF CONTENT ON A DISPLAY DEVICE
First Named Inventor/Applicant Name:	David Strober
Customer Number:	149550
Filer:	Keith Joshua Bae/Traci Burke
Filer Authorized By:	Keith Joshua Bae
Attorney Docket Number:	TSTH.278581
Receipt Date:	28-AUG-2017
Filing Date:	
Time Stamp:	10:17:23
Application Type:	Utility under 35 USC 111(a)

Payment information:

Submitted with Payment	no

File Listing:

Document Number	Document Description	File Name	File Size(Bytes)/ Message Digest	Multi Part /.zip	Pages (if appl.)
1	Power of Attorney	TSTH_278581_POA_and_Transmittal.PDF	279224 4d305716a0fd6ec29a122e830dad3fa9739afa33	no	2

Warnings:

Information:	
Total Files Size (in bytes):	279224

This Acknowledgement Receipt evidences receipt on the noted date by the USPTO of the indicated documents, characterized by the applicant, and including page counts, where applicable. It serves as evidence of receipt similar to a Post Card, as described in MPEP 503.

New Applications Under 35 U.S.C. 111
If a new application is being filed and the application includes the necessary components for a filing date (see 37 CFR 1.53(b)-(d) and MPEP 506), a Filing Receipt (37 CFR 1.54) will be issued in due course and the date shown on this Acknowledgement Receipt will establish the filing date of the application.
National Stage of an International Application under 35 U.S.C. 371
If a timely submission to enter the national stage of an international application is compliant with the conditions of 35 U.S.C. 371 and other applicable requirements a Form PCT/DO/EO/903 indicating acceptance of the application as a national stage submission under 35 U.S.C. 371 will be issued in addition to the Filing Receipt, in due course.
New International Application Filed with the USPTO as a Receiving Office
If a new international application is being filed and the international application includes the necessary components for an international filing date (see PCT Article 11 and MPEP 1810), a Notification of the International Application Number and of the International Filing Date (Form PCT/RO/105) will be issued in due course, subject to prescriptions concerning national security, and the date shown on this Acknowledgement Receipt will establish the international filing date of the application.

UNITED STATES PATENT AND TRADEMARK OFFICE

UNITED STATES DEPARTMENT OF COMMERCE
United States Patent and Trademark Office
Address: COMMISSIONER FOR PATENTS
P.O. Box 1450
Alexandria, Virginia 22313-1450
www.uspto.gov

APPLICATION NUMBER	FILING or 371(c) DATE	GRP ART UNIT	FIL FEE REC'D	ATTY.DOCKET.NO	TOT CLAIMS	IND CLAIMS
15/687,249	08/25/2017	2611	730	TSTH.278581	20	3

CONFIRMATION NO. 4059

FILING RECEIPT

149550
SHOOK, HARDY & BACON LLP
(Touchstream Technologies, Inc.)
2555 GRAND BLVD
KANSAS CITY, MO 64108-2613

Date Mailed: 09/01/2017

Receipt is acknowledged of this non-provisional patent application. The application will be taken up for examination in due course. Applicant will be notified as to the results of the examination. Any correspondence concerning the application must include the following identification information: the U.S. APPLICATION NUMBER, FILING DATE, NAME OF APPLICANT, and TITLE OF INVENTION. Fees transmitted by check or draft are subject to collection. Please verify the accuracy of the data presented on this receipt. **If an error is noted on this Filing Receipt, please submit a written request for a Filing Receipt Correction. Please provide a copy of this Filing Receipt with the changes noted thereon. If you received a "Notice to File Missing Parts" for this application, please submit any corrections to this Filing Receipt with your reply to the Notice. When the USPTO processes the reply to the Notice, the USPTO will generate another Filing Receipt incorporating the requested corrections**

Inventor(s)

David Strober, Rye, NY;

Applicant(s)

Touchstream Technologies, Inc., Valhalla, NY;

Power of Attorney: The patent practitioners associated with Customer Number 149550

Domestic Priority data as claimed by applicant

This application is a CON of 13/532,546 06/25/2012 PAT 9767195
which is a CIP of 13/157,821 06/10/2011 PAT 8904289
which claims benefit of 61/477,998 04/21/2011

Foreign Applications for which priority is claimed (You may be eligible to benefit from the **Patent Prosecution Highway** program at the USPTO. Please see http://www.uspto.gov for more information.) - None.
Foreign application information must be provided in an Application Data Sheet in order to constitute a claim to foreign priority. See 37 CFR 1.55 and 1.76.

Permission to Access Application via Priority Document Exchange: Yes

Permission to Access Search Results: Yes

Applicant may provide or rescind an authorization for access using Form PTO/SB/39 or Form PTO/SB/69 as appropriate.

If Required, Foreign Filing License Granted: 08/31/2017

The country code and number of your priority application, to be used for filing abroad under the Paris Convention, is **US 15/687,249**

Projected Publication Date: 12/07/2017

Non-Publication Request: No

Early Publication Request: No
** **SMALL ENTITY** **
Title

PLAY CONTROL OF CONTENT ON A DISPLAY DEVICE

Preliminary Class

345

Statement under 37 CFR 1.55 or 1.78 for AIA (First Inventor to File) Transition Applications: No

PROTECTING YOUR INVENTION OUTSIDE THE UNITED STATES

Since the rights granted by a U.S. patent extend only throughout the territory of the United States and have no effect in a foreign country, an inventor who wishes patent protection in another country must apply for a patent in a specific country or in regional patent offices. Applicants may wish to consider the filing of an international application under the Patent Cooperation Treaty (PCT). An international (PCT) application generally has the same effect as a regular national patent application in each PCT-member country. The PCT process **simplifies** the filing of patent applications on the same invention in member countries, but **does not result** in a grant of "an international patent" and does not eliminate the need of applicants to file additional documents and fees in countries where patent protection is desired.

Almost every country has its own patent law, and a person desiring a patent in a particular country must make an application for patent in that country in accordance with its particular laws. Since the laws of many countries differ in various respects from the patent law of the United States, applicants are advised to seek guidance from specific foreign countries to ensure that patent rights are not lost prematurely.

Applicants also are advised that in the case of inventions made in the United States, the Director of the USPTO must issue a license before applicants can apply for a patent in a foreign country. The filing of a U.S. patent application serves as a request for a foreign filing license. The application's filing receipt contains further information and guidance as to the status of applicant's license for foreign filing.

Applicants may wish to consult the USPTO booklet, "General Information Concerning Patents" (specifically, the section entitled "Treaties and Foreign Patents") for more information on timeframes and deadlines for filing foreign patent applications. The guide is available either by contacting the USPTO Contact Center at 800-786-9199, or it can be viewed on the USPTO website at http://www.uspto.gov/web/offices/pac/doc/general/index.html.

For information on preventing theft of your intellectual property (patents, trademarks and copyrights), you may wish to consult the U.S. Government website, http://www.stopfakes.gov. Part of a Department of Commerce initiative, this website includes self-help "toolkits" giving innovators guidance on how to protect intellectual property in specific countries such as China, Korea and Mexico. For questions regarding patent enforcement issues, applicants may call the U.S. Government hotline at 1-866-999-HALT (1-866-999-4258).

LICENSE FOR FOREIGN FILING UNDER

Title 35, United States Code, Section 184

Title 37, Code of Federal Regulations, 5.11 & 5.15

GRANTED

The applicant has been granted a license under 35 U.S.C. 184, if the phrase "IF REQUIRED, FOREIGN FILING LICENSE GRANTED" followed by a date appears on this form. Such licenses are issued in all applications where the conditions for issuance of a license have been met, regardless of whether or not a license may be required as set forth in 37 CFR 5.15. The scope and limitations of this license are set forth in 37 CFR 5.15(a) unless an earlier license has been issued under 37 CFR 5.15(b). The license is subject to revocation upon written notification. The date indicated is the effective date of the license, unless an earlier license of similar scope has been granted under 37 CFR 5.13 or 5.14.

This license is to be retained by the licensee and may be used at any time on or after the effective date thereof unless it is revoked. This license is automatically transferred to any related applications(s) filed under 37 CFR 1.53(d). This license is not retroactive.

The grant of a license does not in any way lessen the responsibility of a licensee for the security of the subject matter as imposed by any Government contract or the provisions of existing laws relating to espionage and the national security or the export of technical data. Licensees should apprise themselves of current regulations especially with respect to certain countries, of other agencies, particularly the Office of Defense Trade Controls, Department of State (with respect to Arms, Munitions and Implements of War (22 CFR 121-128)); the Bureau of Industry and Security, Department of Commerce (15 CFR parts 730-774); the Office of Foreign AssetsControl, Department of Treasury (31 CFR Parts 500+) and the Department of Energy.

NOT GRANTED

No license under 35 U.S.C. 184 has been granted at this time, if the phrase "IF REQUIRED, FOREIGN FILING LICENSE GRANTED" DOES NOT appear on this form. Applicant may still petition for a license under 37 CFR 5.12, if a license is desired before the expiration of 6 months from the filing date of the application. If 6 months has lapsed from the filing date of this application and the licensee has not received any indication of a secrecy order under 35 U.S.C. 181, the licensee may foreign file the application pursuant to 37 CFR 5.15(b).

SelectUSA

The United States represents the largest, most dynamic marketplace in the world and is an unparalleled location for business investment, innovation, and commercialization of new technologies. The U.S. offers tremendous resources and advantages for those who invest and manufacture goods here. Through SelectUSA, our nation works to promote and facilitate business investment. SelectUSA provides information assistance to the international investor community; serves as an ombudsman for existing and potential investors; advocates on behalf of U.S. cities, states, and regions competing for global investment; and counsels U.S. economic development organizations on investment attraction best practices. To learn more about why the United States is the best country in the world to develop technology, manufacture products, deliver services, and grow your business, visit http://www.SelectUSA.gov or call +1-202-482-6800.

PATENT APPLICATION FEE DETERMINATION RECORD

Substitute for Form PTO-875

Application or Docket Number
15/687,249

APPLICATION AS FILED - PART I

FOR	(Column 1) NUMBER FILED	(Column 2) NUMBER EXTRA	SMALL ENTITY RATE($)	SMALL ENTITY FEE($)	OR	OTHER THAN SMALL ENTITY RATE($)	OTHER THAN SMALL ENTITY FEE($)
BASIC FEE (37 CFR 1.16(a), (b), or (c))	N/A	N/A	N/A	70		N/A	
SEARCH FEE (37 CFR 1.16(k), (i), or (m))	N/A	N/A	N/A	300		N/A	
EXAMINATION FEE (37 CFR 1.16(o), (p), or (q))	N/A	N/A	N/A	360		N/A	
TOTAL CLAIMS (37 CFR 1.16(i))	20 minus 20 =	*	x 40 =	0.00	OR		
INDEPENDENT CLAIMS (37 CFR 1.16(h))	3 minus 3 =	*	x 210 =	0.00			
APPLICATION SIZE FEE (37 CFR 1.16(s))	If the specification and drawings exceed 100 sheets of paper, the application size fee due is $310 ($155 for small entity) for each additional 50 sheets or fraction thereof. See 35 U.S.C. 41(a)(1)(G) and 37 CFR 1.16(s).			0.00			
MULTIPLE DEPENDENT CLAIM PRESENT (37 CFR 1.16(j))				0.00			
* If the difference in column 1 is less than zero, enter "0" in column 2.			TOTAL	730		TOTAL	

APPLICATION AS AMENDED - PART II

		(Column 1) CLAIMS REMAINING AFTER AMENDMENT		(Column 2) HIGHEST NUMBER PREVIOUSLY PAID FOR	(Column 3) PRESENT EXTRA	SMALL ENTITY RATE($)	SMALL ENTITY ADDITIONAL FEE($)	OR	OTHER THAN SMALL ENTITY RATE($)	OTHER THAN SMALL ENTITY ADDITIONAL FEE($)
AMENDMENT A	Total (37 CFR 1.16(i))	*	Minus	**	=	x =		OR	x =	
AMENDMENT A	Independent (37 CFR 1.16(h))	*	Minus	***	=	x =		OR	x =	
AMENDMENT A	Application Size Fee (37 CFR 1.16(s))									
AMENDMENT A	FIRST PRESENTATION OF MULTIPLE DEPENDENT CLAIM (37 CFR 1.16(j))							OR		
						TOTAL ADD'L FEE		OR	TOTAL ADD'L FEE	

		(Column 1) CLAIMS REMAINING AFTER AMENDMENT		(Column 2) HIGHEST NUMBER PREVIOUSLY PAID FOR	(Column 3) PRESENT EXTRA	RATE($)	ADDITIONAL FEE($)	OR	RATE($)	ADDITIONAL FEE($)
AMENDMENT B	Total (37 CFR 1.16(i))	*	Minus	**	=	x =		OR	x =	
AMENDMENT B	Independent (37 CFR 1.16(h))	*	Minus	***	=	x =		OR	x =	
AMENDMENT B	Application Size Fee (37 CFR 1.16(s))									
AMENDMENT B	FIRST PRESENTATION OF MULTIPLE DEPENDENT CLAIM (37 CFR 1.16(j))							OR		
						TOTAL ADD'L FEE		OR	TOTAL ADD'L FEE	

* If the entry in column 1 is less than the entry in column 2, write "0" in column 3.
** If the "Highest Number Previously Paid For" IN THIS SPACE is less than 20, enter "20".
*** If the "Highest Number Previously Paid For" IN THIS SPACE is less than 3, enter "3".
The "Highest Number Previously Paid For" (Total or Independent) is the highest found in the appropriate box in column 1.

To: IPDOCKET@SHB.COM,IPRCDKT@SHB.COM,tquick@shb.com
From: PAIR_eOfficeAction@uspto.gov
Cc: PAIR_eOfficeAction@uspto.gov
Subject: Private PAIR Correspondence Notification for Customer Number 149550

Sep 01, 2017 03:53:57 AM

Dear PAIR Customer:

SHOOK, HARDY & BACON LLP
(Touchstream Technologies, Inc.)
2555 GRAND BLVD
KANSAS CITY, MO 64108-2613
UNITED STATES

The following USPTO patent application(s) associated with your Customer Number, 149550 , have new outgoing correspondence. This correspondence is now available for viewing in Private PAIR.

The official date of notification of the outgoing correspondence will be indicated on the form PTOL-90 accompanying the correspondence.

Disclaimer:
The list of documents shown below is provided as a courtesy and is not part of the official file wrapper. The content of the images shown in PAIR is the official record.

Application	Document	Mailroom Date	Attorney Docket No.
15687249	APP.FILE.REC	09/01/2017	TSTH.278581

To view your correspondence online or update your email addresses, please visit us anytime at https://sportal.uspto.gov/secure/myportal/privatepair.

If you have any questions, please email the Electronic Business Center (EBC) at EBC@uspto.gov with 'e-Office Action' on the subject line or call 1-866-217-9197 during the following hours:

Monday - Friday 6:00 a.m. to 12:00 a.m.

Thank you for prompt attention to this notice,

UNITED STATES PATENT AND TRADEMARK OFFICE

PATENT APPLICATION INFORMATION RETRIEVAL SYSTEM

UNITED STATES PATENT AND TRADEMARK OFFICE

UNITED STATES DEPARTMENT OF COMMERCE
United States Patent and Trademark Office
Address: COMMISSIONER FOR PATENTS
P.O. Box 1450
Alexandria, Virginia 22313-1450
www.uspto.gov

APPLICATION NUMBER	FILING OR 371(C) DATE	FIRST NAMED APPLICANT	ATTY. DOCKET NO./TITLE
15/687,249	08/25/2017	David Strober	TSTH.278581

CONFIRMATION NO. 4059

PUBLICATION NOTICE

149550
SHOOK, HARDY & BACON LLP
(Touchstream Technologies, Inc.)
2555 GRAND BLVD
KANSAS CITY, MO 64108-2613

OC000000095941297

Title:PLAY CONTROL OF CONTENT ON A DISPLAY DEVICE

Publication No.US-2017-0351757-A1
Publication Date:12/07/2017

NOTICE OF PUBLICATION OF APPLICATION

The above-identified application will be electronically published as a patent application publication pursuant to 37 CFR 1.211, et seq. The patent application publication number and publication date are set forth above.

The publication may be accessed through the USPTO's publically available Searchable Databases via the Internet at www.uspto.gov. The direct link to access the publication is currently http://www.uspto.gov/patft/.

The publication process established by the Office does not provide for mailing a copy of the publication to applicant. A copy of the publication may be obtained from the Office upon payment of the appropriate fee set forth in 37 CFR 1.19(a)(1). Orders for copies of patent application publications are handled by the USPTO's Public Records Division. The Public Records Division can be reached by telephone at (571) 272-3150 or (800) 972-6382, by facsimile at (571) 273-3250, by mail addressed to the United States Patent and Trademark Office, Public Records Division, Alexandria, VA 22313-1450 or via the Internet.

In addition, information on the status of the application, including the mailing date of Office actions and the dates of receipt of correspondence filed in the Office, may also be accessed via the Internet through the Patent Electronic Business Center at www.uspto.gov using the public side of the Patent Application Information and Retrieval (PAIR) system. The direct link to access this status information is currently https://portal.uspto.gov/pair/PublicPair. Prior to publication, such status information is confidential and may only be obtained by applicant using the private side of PAIR.

Further assistance in electronically accessing the publication, or about PAIR, is available by calling the Patent Electronic Business Center at 1-866-217-9197.

Office of Data Managment, Application Assistance Unit (571) 272-4000, or (571) 272-4200, or 1-888-786-0101

To: IPDOCKET@SHB.COM,IPRCDKT@SHB.COM,tquick@shb.com
From: PAIR_eOfficeAction@uspto.gov
Cc: PAIR_eOfficeAction@uspto.gov
Subject: Private PAIR Correspondence Notification for Customer Number 149550

Dec 08, 2017 03:32:09 AM

Dear PAIR Customer:

SHOOK, HARDY & BACON LLP
(Touchstream Technologies, Inc.)
2555 GRAND BLVD
KANSAS CITY, MO 64108-2613
UNITED STATES

The following USPTO patent application(s) associated with your Customer Number, 149550 , have new outgoing correspondence. This correspondence is now available for viewing in Private PAIR.

The official date of notification of the outgoing correspondence will be indicated on the form PTOL-90 accompanying the correspondence.

Disclaimer:
The list of documents shown below is provided as a courtesy and is not part of the official file wrapper. The content of the images shown in PAIR is the official record.

Application	Document	Mailroom Date	Attorney Docket No.
15687249	NTC.PUB	12/07/2017	TSTH.278581

To view your correspondence online or update your email addresses, please visit us anytime at https://sportal.uspto.gov/secure/myportal/privatepair.

If you have any questions, please email the Electronic Business Center (EBC) at EBC@uspto.gov with 'e-Office Action' on the subject line or call 1-866-217-9197 during the following hours:

Monday - Friday 6:00 a.m. to 12:00 a.m.

Thank you for prompt attention to this notice,

UNITED STATES PATENT AND TRADEMARK OFFICE

PATENT APPLICATION INFORMATION RETRIEVAL SYSTEM

UNITED STATES PATENT AND TRADEMARK OFFICE

UNITED STATES DEPARTMENT OF COMMERCE
United States Patent and Trademark Office
Address: COMMISSIONER FOR PATENTS
P.O. Box 1450
Alexandria, Virginia 22313-1450
www.uspto.gov

APPLICATION NO.	FILING DATE	FIRST NAMED INVENTOR	ATTORNEY DOCKET NO.	CONFIRMATION NO.
15/687,249	08/25/2017	David Strober	TSTH.278581	4059

149550 7590 01/08/2019
SHOOK, HARDY & BACON LLP
(Touchstream Technologies, Inc.)
2555 GRAND BLVD
KANSAS CITY, MO 64108-2613

EXAMINER
HOPE, DARRIN

ART UNIT	PAPER NUMBER
2173	

NOTIFICATION DATE	DELIVERY MODE
01/08/2019	ELECTRONIC

Please find below and/or attached an Office communication concerning this application or proceeding.

The time period for reply, if any, is set in the attached communication.

Notice of the Office communication was sent electronically on above-indicated "Notification Date" to the following e-mail address(es):

IPDOCKET@SHB.COM
IPRCDKT@SHB.COM

PTOL-90A (Rev. 04/07)

Office Action Summary	Application No. 15/687,249	Applicant(s) Strober, David	
	Examiner DARRIN HOPE	Art Unit 2173	AIA Status No

-- The MAILING DATE of this communication appears on the cover sheet with the correspondence address --

Period for Reply

A SHORTENED STATUTORY PERIOD FOR REPLY IS SET TO EXPIRE 3 MONTHS FROM THE MAILING DATE OF THIS COMMUNICATION.

- Extensions of time may be available under the provisions of 37 CFR 1.136(a). In no event, however, may a reply be timely filed after SIX (6) MONTHS from the mailing date of this communication.
- If NO period for reply is specified above, the maximum statutory period will apply and will expire SIX (6) MONTHS from the mailing date of this communication.
- Failure to reply within the set or extended period for reply will, by statute, cause the application to become ABANDONED (35 U.S.C. § 133). Any reply received by the Office later than three months after the mailing date of this communication, even if timely filed, may reduce any earned patent term adjustment. See 37 CFR 1.704(b).

Status

1)☑ Responsive to communication(s) filed on 25 August 2017.

☐ A declaration(s)/affidavit(s) under **37 CFR 1.130(b)** was/were filed on _____.

2a)☐ This action is **FINAL.** 2b) ☑ This action is non-final.

3)☐ An election was made by the applicant in response to a restriction requirement set forth during the interview on _____; the restriction requirement and election have been incorporated into this action.

4)☐ Since this application is in condition for allowance except for formal matters, prosecution as to the merits is closed in accordance with the practice under *Ex parte Quayle*, 1935 C.D. 11, 453 O.G. 213.

Disposition of Claims*

5) ☑ Claim(s) 1-20 is/are pending in the application.

5a) Of the above claim(s) _____ is/are withdrawn from consideration.

6) ☐ Claim(s) _____ is/are allowed.

7) ☑ Claim(s) 1-20 is/are rejected.

8) ☐ Claim(s) _____ is/are objected to.

9) ☐ Claim(s) _____ are subject to restriction and/or election requirement

* If any claims have been determined allowable, you may be eligible to benefit from the **Patent Prosecution Highway** program at a participating intellectual property office for the corresponding application. For more information, please see http://www.uspto.gov/patents/init_events/pph/index.jsp or send an inquiry to **PPHfeedback@uspto.gov.**

Application Papers

10)☐ The specification is objected to by the Examiner.

11)☑ The drawing(s) filed on 25 August 2017 is/are: a)☑ accepted or b)☐ objected to by the Examiner.

Applicant may not request that any objection to the drawing(s) be held in abeyance. See 37 CFR 1.85(a).

Replacement drawing sheet(s) including the correction is required if the drawing(s) is objected to. See 37 CFR 1.121(d).

Priority under 35 U.S.C. § 119

12)☐ Acknowledgment is made of a claim for foreign priority under 35 U.S.C. § 119(a)-(d) or (f).

Certified copies:

a)☐ All b)☐ Some** c)☐ None of the:

1.☐ Certified copies of the priority documents have been received.

2.☐ Certified copies of the priority documents have been received in Application No. _____.

3.☐ Copies of the certified copies of the priority documents have been received in this National Stage application from the International Bureau (PCT Rule 17.2(a)).

** See the attached detailed Office action for a list of the certified copies not received.

Attachment(s)

1) ☑ Notice of References Cited (PTO-892)

2) ☐ Information Disclosure Statement(s) (PTO/SB/08a and/or PTO/SB/08b) Paper No(s)/Mail Date _____.

3) ☐ Interview Summary (PTO-413) Paper No(s)/Mail Date _____.

4) ☐ Other: _____.

Notice of Pre-AIA or AIA Status

1. The present application is being examined under the pre-AIA first to invent provisions. This Office Action is responsive to the communications filed on 25 August 2017. Claims 1-20 are pending.

Claim Rejections - 35 USC § 102

2. The following is a quotation of the appropriate paragraphs of pre-AIA 35 U.S.C. 102 that form the basis for the rejections under this section made in this Office action:

> A person shall be entitled to a patent unless –
>
> (b) the invention was patented or described in a printed publication in this or a foreign country or in public use or on sale in this country, more than one year prior to the date of application for patent in the United States.

3. Claims 1 and 4-20 are rejected under pre-AIA 35 U.S.C. 102(b) as being anticipated by Morris (US 2012/0130971 A1).

4. Per claim 1, Morris discloses a non-transitory computer storage medium (paragraph [0013] storing computer-useable instructions that, when used by one or more computing devices, cause the one or more computing devices to perform operations for remotely presenting various types of content(Abstract), the operations comprising:

- initializing a connection with a remote server device to facilitate an association with a remote computing device(paragraphs [0027-0028]);
- receiving, from the remote server device, a first message that includes at least one command in a first format(e.g., Step 210 as shown in Fig. 2; paragraph [0044]), wherein the first message is received based at least in part on a second

message including at least one command in a second format having been sent from the associated remote computing device(e.g., Step 212 as shown in Fig. 2; paragraph [0045]);

- employing a first media player application operable to load a first piece of content referenced in the received first message(e.g., Step 214 as shown in Fig. 2; paragraph [0046]); and
- controlling a presentation of the first piece of content loaded in the employed first media player application based on a first command in the first format having been included in the received first message for recognition by the first media player application (e.g., Fig. 4; paragraph [0010]; paragraph [0016]; paragraph [0026]; paragraph [0033]).

5. **Per claim 4,** Morris discloses the non-transitory computer storage medium of claim 1, wherein the second message is sent to the remote server device (e.g., Step 214 as shown in Fig. 2; paragraph [0046], "*At 214, the message is sent from the portable computing device to an application server that provides media content to a set top box device. The application server sends information to the set top box device that causes the set top box device to automatically play the particular media content item in response to the message. The method ends at 216.*").

6. **Per claim 5**, Morris discloses the non-transitory computer storage medium of claim 1, wherein the at least one command in the second format is converted into the at least one command in the first format based at least in part on the second message including therein a reference to the first piece of content (paragraph [0033]).

7. **Per claim 6**, Morris discloses the non-transitory computer storage medium of claim 1, wherein the at least one command in the second format is converted into the at least one command in the first format based at least in part on a reference to the first media player application having been included in the second message(paragraph [0033]).

8. **Per claim 7**, Morris discloses the non-transitory computer storage medium of claim 1, wherein the first media player application is employed based at least in part on the received first message including therein a reference to the first media player application (paragraph [0039]).

9. **Per claim 8**, Morris discloses the non-transitory computer storage medium of claim 1, wherein controlling the presentation includes an execution of the first command (paragraph [0010], "… *The application server generates at least one command executable by the media device coupled to the external display device that enables the media device to access the media content and to send the media content to the external display device when a format of the media content is playable by the media device...* "; paragraphs [0012-0015]).

10. **Per claim 9**, Morris discloses the non-transitory computer storage medium of claim 1, the operations further comprising: obtaining the first media player application based on a determination that the first media player application is not already being employed (e.g., Step 306 as shown in Fig. 3; paragraph [0052]).

11. **Per claim 10**, Morris discloses the non-transitory computer storage medium of claim 9, wherein the first media player application is obtained from a content provider that corresponds to the referenced first piece of content (paragraph [0029]).

12. **Per claim 11**, Morris discloses the non-transitory computer storage medium of claim 1, wherein the connection with the remote server device is maintained, for at least a duration that the first media player application is being employed, to facilitate a change from the first media player application to a second media player application operable to load a second piece of content referenced in a second message received from the remote server device (paragraphs [0025-0026]). Morris teaches a throw application 132 wherein the connection with the remote server device is maintained, for at least a duration that the first media player application is being employed, to facilitate a change from the first media player application to a second media player application operable to load a second piece of content referenced in a second message received from the remote server device

13. **Per claim 12**, Morris discloses a computer-implemented method for remotely presenting various types of content (Abstract), comprising:

- initializing, by a content presentation device, a connection with a remote server device to facilitate an association between the content presentation device and a remote computing device(paragraphs [0027-0028]);
- receiving, by the content presentation device and from the remote server device, a first message that includes at least one command in a first format(e.g., Step 210 as shown in Fig. 2; paragraph [0044]), wherein the first message is received based at least in part on a second message including at least one command in a second format having been sent from the remote computing device associated with the content presentation device(e.g., Step 212 as shown in Fig. 2; paragraph [0045]);

- employing, while the connection with the remote server device is maintained, a first media player application operable to load a first piece of content based at least in part on the first piece of content being referenced in the received first message(e.g., Step 214 as shown in Fig. 2; paragraph [0046]); and
- controlling, by the content presentation device, a presentation of the first piece of content loaded in the employed first media player application based on a first command in the first format having been included in the received first message for recognition by the first media player application(e.g., Fig. 4; paragraph [0010]; paragraph [0016]; paragraph [0026]; paragraph [0033]).

14. **Per claim 13**, Morris disclose the computer-implemented method of claim 12, wherein the first media player application is employed based at least in part on the received first message including therein a reference to the first media player application(paragraph [0039]).

15. **Per claim 14**, Morris disclose the computer-implemented method of claim 12, the operations further obtaining the first media player application based on a determination that a second media player application is being employed(e.g., Step 306 as shown in Fig. 3; paragraph [0052]).

16. **Per claim 15**, Morris discloses the computer-implemented method of claim 12, wherein the first media player application obtained by retrieving the first media player application from a content provider associated with the referenced first piece of content (paragraphs [0025-0026]).

17. **Per claim 16**, Morris discloses the computer-implemented method of claim 12, wherein the presentation of the first piece of content loaded in the employed first media

player application is controlled based further on the first command in the first format having been converted, from the second command in the second format, for inclusion in the received first message for recognition by the first media player application (paragraph [0033]).

18. **Per claim 17**, Morris discloses a content presentation device (e.g., media device 108 as shown in Fig. 1; Abstract); comprising:

- a display (e.g., display device 104 as shown in Fig. 1);
- at least one processor(e.g., processor 154 as shown in Fig. 1); and
- at least one computer storage media (e.g., memory 162 as shown in Fig. 1) storing computer-usable instructions that, when used by the at least one processor, cause the at least one processor to:
- initialize a connection with a remote server device to facilitate an association between the content presentation device and a remote computing device, wherein the associated remote computing device is configured to send messages that include at least one command in a second format(paragraphs [0027-0028]);
- receive, from the remote server device, a first message that includes at least one command in a first format based on a second message in the second format sent from the associated remote computing device(e.g., Step 212 as shown in Fig. 2; paragraph [0045]);
- employ a first media player application operable to load a first piece of content referenced in the received first message(e.g., Step 214 as shown in Fig. 2; paragraph [0046]); and

- control a presentation of the first piece of content loaded in the employed first media player application based on a first command in the first format having been included in the received first message for recognition by the first media player application(e.g., Fig. 4; paragraph [0010]; paragraph [0016]; paragraph [0026]; paragraph [0033]).

19. **Per claim 18**, Morris discloses the content presentation device of claim 17, wherein a command in the first format is recognizable by the first media player application (paragraph [0034]).

20. **Per claim 19**, Morris discloses the content presentation device of claim 17, wherein the second message is sent to the remote server device(e.g., Step 214 as shown in Fig. 2; paragraph [0046], "*At 214, the message is sent from the portable computing device to an application server that provides media content to a set top box device. The application server sends information to the set top box device that causes the set top box device to automatically play the particular media content item in response to the message. The method ends at 216.*").

21. **Per claim 20**, Morris discloses the content presentation device of claim, wherein the first media player application is employed based at least in part on the received first message including therein a reference to the first media player application (paragraph [0033]).

Claim Rejections - 35 USC § 103

22. The following is a quotation of pre-AIA 35 U.S.C. 103(a) which forms the basis for all obviousness rejections set forth in this Office action:

> (a) A patent may not be obtained though the invention is not identically disclosed or described as set forth in section 102, if the differences between the subject matter sought to be patented and the prior art are such that the subject matter as a whole would have been obvious at the time the invention was made to a person having ordinary skill in the art to which said subject matter pertains. Patentability shall not be negatived by the manner in which the invention was made.

23. The factual inquiries set forth in *Graham v. John Deere Co.*, 383 U.S. 1, 148 USPQ 459 (1966), that are applied for establishing a background for determining obviousness under pre-AIA 35 U.S.C. 103(a) are summarized as follows:

1. Determining the scope and contents of the prior art.
2. Ascertaining the differences between the prior art and the claims at issue.
3. Resolving the level of ordinary skill in the pertinent art.
4. Considering objective evidence present in the application indicating obviousness or nonobviousness.

24. Claims 2 and 3 are rejected under pre-AIA 35 U.S.C. 103(a) as being unpatentable over Morris (US 2012/0130971 A1) in view of Mahajan et al. (Hereinafter, Mahajan, US 2009/0248802 A1).

25. Per claim 2, Morris discloses the non-transitory computer storage medium of claim 1, but does not expressly disclose wherein a command in the second format is a universal command.

26. Mahajan discloses wherein a command in the second format is a universal command (paragraphs [0013-0014; paragraphs [0022], [0024], [0036], [0038], [0040], [0042]). Mahajan teaches translating a platform specific media playback command into a generic or universal media playback command for transmission to a client.

27. At the time of the invention, it would have been obvious to a person of ordinary skill in the art to use the Mahajan systems and methods for managing multimedia

operations in remote sessions in Morris' media content playing device to improve the device with reasonable expectation that this would result in a media content playing device that could allow playback of media on different platforms. This method for improving the media content playing device of Morris was within the ordinary ability of one of ordinary skill in the art based on the teachings of Mahajan.

28. Therefore, it would have been obvious to one of ordinary skill in the art to combine the teachings of Morris and Mahajan to obtain the invention as specified in claim 2

29. **Per claim 3**, Morris and Mahajan disclose the non-transitory computer storage medium of claim 2, wherein the first format is different than the second format (Mahajan, paragraph [0061]).

Conclusion

30. Any inquiry concerning this communication or earlier communications from the examiner should be directed to DARRIN HOPE whose telephone number is (571)270-5079. The examiner can normally be reached on Mon-Thr - 7-4:30, Fri - 7-3:30, Alt. Fri Off.

Examiner interviews are available via telephone, in-person, and video conferencing using a USPTO supplied web-based collaboration tool. To schedule an interview, applicant is encouraged to use the USPTO Automated Interview Request (AIR) at http://www.uspto.gov/interviewpractice.

If attempts to reach the examiner by telephone are unsuccessful, the examiner's supervisor, Kieu D Vu can be reached on (571)272-4057. The fax phone number for the organization where this application or proceeding is assigned is 571-273-8300.

Information regarding the status of an application may be obtained from the Patent Application Information Retrieval (PAIR) system. Status information for published applications may be obtained from either Private PAIR or Public PAIR. Status information for unpublished applications is available through Private PAIR only. For more information about the PAIR system, see http://pair-direct.uspto.gov. Should you have questions on access to the Private PAIR system, contact the Electronic Business Center (EBC) at 866-217-9197 (toll-free). If you would like assistance from a USPTO Customer Service Representative or access to the automated information system, call 800-786-9199 (IN USA OR CANADA) or 571-272-1000.

DARRIN HOPE
Examiner
Art Unit 2173

/TADESSE HAILU/
Primary Examiner, Art Unit 2173

Notice of References Cited	Application/Control No. 15/687,249	Applicant(s)/Patent Under Reexamination Strober, David	
	Examiner DARRIN HOPE	Art Unit 2173	Page 1 of 1

U.S. PATENT DOCUMENTS

*		Document Number Country Code-Number-Kind Code	Date MM-YYYY	Name	CPC Classification	US Classification
*	A	US-20120130971-A1	05-2012	Morris; Nadia	H04N21/234309	707/706
*	B	US-20090248802-A1	10-2009	Mahajan; Rajneesh	G06F9/541	709/204
	C					
	D					
	E					
	F					
	G					
	H					
	I					
	J					
	K					
	L					
	M					

FOREIGN PATENT DOCUMENTS

*		Document Number Country Code-Number-Kind Code	Date MM-YYYY	Country	Name	CPC Classification
	N					
	O					
	P					
	Q					
	R					
	S					
	T					

NON-PATENT DOCUMENTS

*		Include as applicable: Author, Title Date, Publisher, Edition or Volume, Pertinent Pages)
	U	
	V	
	W	
	X	

*A copy of this reference is not being furnished with this Office action. (See MPEP § 707.05(a).)
Dates in MM-YYYY format are publication dates. Classifications may be US or foreign.

Search Notes	Application/Control No.	Applicant(s)/Patent Under Reexamination
	15/687,249	Strober, David
	Examiner	**Art Unit**
	DARRIN HOPE	2173

CPC - Searched*		
Symbol	**Date**	**Examiner**

CPC Combination Sets - Searched*		
Symbol	**Date**	**Examiner**
G06F17/30846 G06F9/452 G06F17/30864	12/26/2018	DH

US Classification - Searched*			
Class	**Subclass**	**Date**	**Examiner**
715	716	12/26/2018	DH

* See search history printout included with this form or the SEARCH NOTES box below to determine the scope of the search.

Search Notes		
Search Notes	**Date**	**Examiner**
EAST	12/26/2018	DH

Interference Search			
US Class/CPC Symbol	**US Subclass/CPC Group**	**Date**	**Examiner**

Index of Claims	Application/Control No.	Applicant(s)/Patent Under Reexamination
	15/687,249	Strober, David
	Examiner	**Art Unit**
	DARRIN HOPE	2173

✓	Rejected	-	Cancelled	N	Non-Elected	A	Appeal
=	Allowed	÷	Restricted	I	Interference	O	Objected

CLAIMS

☐ Claims renumbered in the same order as presented by applicant ☐ CPA ☐ T.D. ☐ R.1.47

CLAIM		DATE								
Final	Original	12/26/2018								
	1	✓								
	2	✓								
	3	✓								
	4	✓								
	5	✓								
	6	✓								
	7	✓								
	8	✓								
	9	✓								
	10	✓								
	11	✓								
	12	✓								
	13	✓								
	14	✓								
	15	✓								
	16	✓								
	17	✓								
	18	✓								
	19	✓								
	20	✓								

Bibliographic Data

Application No: 15/687,249

Foreign Priority claimed: ○ Yes ◉ No

35 USC 119 (a-d) conditions met: ☐ Yes ☑ No ☐ Met After Allowance

Verified and Acknowledged: /DARRIN HOPE/ (Examiner's Signature) (Initials)

Title: PLAY CONTROL OF CONTENT ON A DISPLAY DEVICE

FILING or 371(c) DATE	CLASS	GROUP ART UNIT	ATTORNEY DOCKET NO.
08/25/2017	715	2173	TSTH.278581
RULE			

APPLICANTS

Touchstream Technologies, Inc., Valhalla, NY,

INVENTORS

David Strober Rye, NY, UNITED STATES

CONTINUING DATA

This application is a CON of 13532546 06/25/2012 PAT 9767195

13532546 is a CIP of 13157821 06/10/2011 PAT 8904289

13157821 has PRO of 61477998 04/21/2011

FOREIGN APPLICATIONS

IF REQUIRED, FOREIGN LICENSE GRANTED**

08/31/2017

**** SMALL ENTITY ****

STATE OR COUNTRY

UNITED STATES

ADDRESS

SHOOK, HARDY & BACON LLP
(Touchstream Technologies, Inc.)
2555 GRAND BLVD
KANSAS CITY, MO 64108-2613
UNITED STATES

FILING FEE RECEIVED

$730

EAST Search History

EAST Search History (Prior Art)

Ref #	Hits	Search Query	DBs	Default Operator	Plurals	Time Stamp
S1	2	("20170351757").PN.	US-PGPUB; USPAT; USOCR; DERWENT	OR	OFF	2018/12/15 17:03
S2	200	("8880491" "20120130971" "9338494" "20120210371" "8621507" "20120210350" "9924229" "9258613" "9628842" "20120210344" "20120117586" "20120112986" "9426510" "20120210378" "9264758" "8510769" "20120210365" "8949376" "9521453" "9648380" "8789086" "10097880" "8704854" "20120210343" "8984626" "20110066942" "20110064378" "20100180010" "20110063317" "20110064385" "20110064377" "20080189295" "20110067099" "20120117588" "20110066944" "20110066663" "20110067066" "9253222" "20110066489" "8660545" "20100235443" "10091345" "20120210226" "7917932" "20060008256" "20080209021" "20090156181" "20080155470" "20060253874" "8965920" "20090061841" "20110064386" "8265612" "8417096" "8661494" "8868785" "20080155057" "20080212945" "8175638" "20080212944" "20120011558" "20060265427" "20110137976" "20120210225" "20080176540" "20080273077" "20100153410" "20060224761" "20100281108" "9633656" "8904455" "20110088057" "20110135283" "8473976" "20110170842" "20130272681" "8682145" "20040133657" "20110145581" "20110131180" "20120117590" "20060259930" "20080160909" "20060173974" "20070157072" "20120210238" "8897737" "20080059533" "8271341" "8108342" "8359612" "20080214215" "9092519" "20110289108" "20080209075" "20080175569" "20080201751" "20020140855" "20020040475" "20080133736" "20090156179" "20100325238" "20080180401" "7102688" "8468130" "20060062544" "20080187115"	US-PGPUB; USPAT	OR	OFF	2018/12/15 17:09

		"8160495" "20130022185" "20090069915" "20120323349" "20080305738" "20130024539" "20100325239" "20040133914" "20090106200" "7966638" "20060248557" "20130022335" "20080175566" "20080160908" "20080184317" "20080184359" "20090304344" "20080182510" "20080182508" "9055269" "20060291506" "20110197237" "20080183840" "20080182509" "20060184431" "8700739" "20060253782" "20080201375" "20080162655" "20080163302" "20090113315" "9009589" "8832564" "20040086120" "20130097302" "20080010372" "20100064332" "20110004517" "7881656" "20080155129" "20080201376" "8813127" "8099455" "9490998" "7711605" "20080244681" "20040244031" "20080177860" "8555318" "20090058822" "8606948" "20090304346" "20080178238" "6587127" "20120005311" "9275054" "20110119637" "8090768" "8886759" "20080276279" "20080155634" "20100235762" "20080160910" "20100287070" "8112032" "20060059095" "20090049156" "20090030978" "20080141307" "8818179" "8556722" "20100042749" "20120210245" "8107977" "8271889" "20110009051" "20070136778" "20050076092" "20100042499" "20080155109" "8290929" "20040165006" "20070294096" "20060026162" "20070265073" "20090011780" "20100281042" "7650361" "20070288836" "8634703" "20120079126" "9009758" "9563702").PN.				
S3	200	("8046672" "20090112839" "7451177" "20110231867" "9178923" "8281001" "20120254929" "20100049835" "20090158136" "8751672" "20080256129" "20110158610" "8521857" "20080189752" "20100107201" "20120131098" "20040044725" "20090069038" "20110185378" "8695030" "20100146411" "20120210352" "20050177853" "20090177736" "20070299976" "20110060994" "20030110503" "8407755" "20040133908" "9065683" "8327403" "7956848" "20070204011" "8176121" "7076495" "20110150432" "20120210377" "20060206581" "20120059884" "20020156909" "8350971" "20020140571" "8204485" "20100161729" "7376414" "8402498" "8230341" "20020129089"	US-PGPUB; USPAT	OR	OFF	2018/12/15 17:10

"20080281689" RE44298 "20050208930"
"9113195" "8407303" "7899808"
"6476825" "20080229335" "8246454"
"20040224723" "9769414"
"20080098433" "9100726" "8930561"
"8001471" "20100273553"
"20020161794" "20100131848"
"9405710" "20090019061"
"20020169540" "8244315"
"20090286560" "8315608"
"20100333032" "20020087887"
"20110087348" "8677402" "8707361"
"9794647" "20060041926"
"20100085857" "8301784" "7975062"
"7224260" "8886710" "20080028023"
"20120036543" "20120124625"
"20060276230" "20090280792"
"20070199014" "7870272" "7840631"
"20100016080" "8769578" "7574723"
"20090125609" "20100131978"
"20070204057" "9137576"
"20100333135" "20090112874"
"20100333151" "20050208929"
"8793305" "7426532" "20020151327"
"20100318357" "8316052" "8094794"
"8775647" "8266173" "20120117587"
"20050080496" "20120079095"
"6882299" "20080133529"
"20120131609" "20080148328"
"7890957" "20110289460"
"20100333136" "20080066080"
"9003500" "7607582" "20100293598"
"20090100065" "20040226048"
"20100042747" "20110099157"
"20120030701" "20070198744"
"20080216153" "6938101"
"20100070925" "20100306402"
"20090113301" "20090047000"
"20090254950" "8918645"
"20030135859" "20050088333"
"8467275" "20050216606"
"20090156170" "20120078997"
"20020162112" "20090156183"
"20110320476" "20020143805"
"9201627" "7784065" "20020161780"
"8457661" "20140032636"
"20120079276" "20090259711"
"20070264982" "8090694"
"20070006255" "8359351"
"20100306815" "7506019"
"20050091359" "20100057583"
"7689510" "20100299761" "9271022"
"6104334" "7475155" "20060136572"
"8185477" "8676034" "20080140664"
"7775886" "7962097" "8214422"
"20050198353" "20060242259"
"20070174624" "6769028" "8001236"
"20100235891" "7716224"
"20080243828" "20080243788"
"20030233349" "7376696"
"20070250194" "8077263" "9201668"
"7702279" "8713605" "8954444"
"20080124055" "20070250597"
"20050210101" "7653691"

		"20120210366" "20060075429" "8464302").PN.				
S4	200	("20100169347" "8943169" "20060161635" "7143214" "8583758" "20070198633" "20080098426" "20120206317" "8792429" "8874244" "20060176271" "8150934" "20120263440" "9066199" "20080195698" "8381310" "20070204003" "8249559" "20060136577" "20030014630" "20110167447" "20120052941" "20110239142" "8126200" "20100205628" "8234282" "7565294" "20060253525" "20030132953" "20070168543" "20100185306" "9219734" "8291028" "20080114861" "8180645" "20120221645" "8887221" "20110163939" "7046161" "9525838" "8656424" "8875180" "20130166423" "20110247035" "20100169977" "8171520" "8977710" "20090249222" "20110321071" "20120075529" "20060004834" "8150911" "8374923" "20120079606" "20110087603" "8990215" "20110107225" "20040044723" "7873578" "8316389" "8209396" "20090089838" "20120039467" "20110069936" "9479737" "20090234939" "9716774" "8812850" "20070016865" "9391808" "20090182806" "20090182805" "20090281874" "20070124769" "20100017821" "9374605" "20080134237" "20120023408" "7779097" "20080290987" "20070169115" "8860804" "6182094" "6591247" "6834294" "20090177303" "20070250195" "20130047083" "20080109298" "20090319599" "20120222061" "20120124475" "20110225066" "7725102" "20100169939" "20030141987" "20090234955" "8510847" "9067150" "20050177745" "8677392" "20110029604" "20080097632" "7996869" "9167208" "20060184968" "20060094360" "8079055" "20070121651" "20090024943" "20070005727" "8768307" "20080294674" "8826312" "20080229352" "8494907" "20100169942" "7734724" "8073380" "8122464" "20060085825" "8798445" "7054863" "8667163" "7895633" "8112504" "7519681" "20050177624" "6925495" "20080021775" "20080307477" "20080243694" "20120151525" "8577420" "20080276266" "20060174026" "8667546" "20110211813" "8503861" "8621338" "20090172758" "20060048201" "20080107102" "9356982" "9078043" "20100144329"	US-PGPUB; USPAT	OR	OFF	2018/12/15 17:10

		"8036418" "20060259589" "20030043191" "20030182139" "20110055218" "20090198357" "8352576" "20110265111" "8806537" "9786159" "20060159109" "8588590" "7536708" "20090198358" "7433922" "20100208069" "20070277201" "20050058260" "20090052863" "20090043692" "20100031306" "20020087661" "20120072270" "8561114" "20050204309" "20070005450" "8490127" "8943122" "20090248182" "20090157792" "20090029685" "20080320508" "20030005429" "20080077483" "8352616" "7512882" "20040044724" "5732216" "9832532" "7519911" "20120042309" "20080256485" "6199076" "20090100477" "9883233" "20090064038" "20070288970" "20080205205" "20070073725" "20100235328" "20100036908" "8401681" "10080063" "20090172747").PN.				
S5	200	("8015263" "20120079080" "8978147" "20100071076" "20120124171" "8015491" "20110035668" "20060271977" "20060129458" "20100008586" "20020078144" "20100299701" "20060248570" "20100138761" "7721301" "9628746" "20030151618" "20110135271" "20050286497" "20080155616" "20070067309" "8213924" "20030018971" "20100274858" "20020069113" "9700791" "20110138429" "20080195466" "7454515" "20100031366" "20100175093" "8081994" "7920901" "20100106852" "20020161775" "20090172726" "8296808" "20080005130" "20060041639" "20110119600" "20070183741" "8700005" "20050251749" "8543095" "6968364" "20060235700" "20080195692" "20100064055" "20100041457" "8438589" "7917439" "8155582" "8671434" "20060068919" "20090077584" "7979881" "20110153048" "20110131604" "20080141150" "20060123053" "20120023521" "9152300" "20090070438" "20110151905" "20090186700" "20050149872" "20110191677" "20090099858" "9712582" "6829368" "20070124737" "20100082567" "8601089" "20110317634" "7069310" "20110214147" "8204793" "8656040" "7809802" "8452775" "8103957" "20090177742" "20110289073" "9626363" "20070028111" "20110185312" "20050080878" "8135865" "20040215741"	US-PGPUB; USPAT	OR	OFF	2018/12/15 17:11

		"20080222546" "8469813" "20100082136" "20040148362" "8611919" "20120054793" "20110320963" "8429707" "20030140090" "8271549" "8438287" "20070204115" "8458749" "9864958" "20060259588" "6956833" "20100138298" "20060041640" "8990104" "8832754" "20120023520" "9124650" "20120173383" "20100191608" "20060015649" "20070055743" "9369776" "20100299417" "9204193" "9055315" "8799758" "20020007418" "20040171376" "20070073726" "9509796" "7814148" "8931010" "8122004" "8437744" "20090117890" "20110283311" "20050267994" "7797242" "20090094511" "20080293450" "20070189708" "20050273827" "8739294" "8072956" "20040177376" "9706160" "6603488" "20090220216" "10057631" "20050108769" "9116340" "8156176" "8738639" "8149701" "7509178" "20080155062" "8539093" "20060265329" "20080117922" "20080140523" "9414101" "9521174" "20070209005" "20080244637" "8069232" "8694531" "20100278321" "8682262" "20110093892" "20100037264" "20080046919" "8417258" "7848959" "8051453" "20100251136" "20090228125" "20070016922" "20110184862" "7080030" "8689142" "7917645" "20120036549" "20100222090" "20050278435" "8965807" "20100150395" "20090099912" "9483755" "9519940" "20110137729" "20070073728" "20070048714" "7921309" "20040172481" "8526928" "20070245882" "9258326" "20120019400" "20050136949" "20080155663" "20100100636" "20080098432" "20120011553" "20100296654" "7155436" "6055560").PN.				
S6	200	("7593576" "20050265701" "6288716" "20110119149" "20080082381" "20090204639" "8380878" "8341513" "7627341" "20110164175" "20090043657" "7516213" "8606314" "20070073727" "20100138746" "8826145" "9135363" "8086226" "8495686" "8621541" "8589991" "20110138331" "8046802" "20100145809" "7818321" "20110035462" "20030229899" "9078082" "7873742" "7724716" "20110138415" "8631436" "20090017827" "20060208074" "20080189766" "20060179129" "20080215452" "20120096092"	US-PGPUB; USPAT	OR	OFF	2018/12/15 17:11

"8117062" "20050198574"
"20050021478" "20110137728"
"20110131600" "20110082761"
"9824389" "20060159366" "7725360"
"8856118" "20090052870"
"20100011299" "7707601"
"20060127037" "7487112"
"20070100904" "20110219421"
"7769819" "20120036584" "9171851"
"20020091848" "20070239546"
"20050091268" "20090102983"
"20050210120" "20050108519"
"20070250400" "20110218044"
"8707366" "20100169464" "7792920"
"20100313250" "7917933"
"20100118200" "20050182828"
"7689613" "8230466" "20070173266"
"20070016653" "20030023505"
"20050267883" "8291320" "8433611"
"5721827" "20020124100" "6198479"
"20090006644" "20120162537"
"20070294292" "9933937"
"20110179453" "20090318192"
"9032296" "8868640" "7693992"
"8909695" "7480703" "20080094400"
"20080244010" "8375208" "7949722"
"20090210493" "20080250431"
"20080221909" "20090249418"
"20090099859" "8095424"
"20060182424" "6735628"
"20050193094" "20070118426"
"8341210" "20110131518"
"20080071834" "8660530"
"20050055730" "20060193606"
"8656446" "20110181780"
"20090172108" "7178106"
"20100198704" "7673315"
"20110170837" "20090144624"
"7472175" "20070155306"
"20050055717" "20110185036"
"9886599" "7337147" "8667152"
"20060031551" "20110214045"
"8060625" "20100257458"
"20100138297" "20070162939"
"20050278729" "20050193322"
"20110289317" "8621025"
"20090043870" "20080215507"
"20050033855" "20080065974"
"20070291710" "20090099836"
"7426329" "8086575" "20010038392"
"20070061845" "8244179"
"20070061835" "20080200161"
"20110126236" "20090063645"
"20070174774" "20030122966"
"8106742" "7487441" "20080147772"
"20060085351" "7500007"
"20050060756" "20040177375"
"8621509" "20110026692"
"20120079119" "20020069308"
"8220708" "8977294" "8825468"
"20070067315" "7920856"
"20100087179" "20090006375"
"20110269424" "8190692" "7988042"
"20020169797" "20110197159"

		"20040025185" "9128961" "20050086696" "8176431" "20100241475" "20080027827" "20030065805" "20100070565" "20080320391" "8375131" "20020147699" "7578002" "20110113354" "20070050734" "8291459" "20090228807" "20110087971" "20080254832" "20120078952" "20080317441").PN.				
S7	200	("20110225417" "7966552" "20020107802" "8176506" "20110013885" "8935300" "20110289414" "9047516" "7756545" "7735012" "20170149600" "6944632" "7194235" "8463869" "20040103297" "20040068536" "8769297" "9635066" "20100299712" "8584171" "9681105" "7693902" "20110040894" "7574691" "20110181496" "20110078174" "20100161818" "20050039135" "7130616" "8498628" "7925299" "20090327449" "7356575" "20100279673" "8161411" "9015179" "20090018898" "20090049074" "7793823" "9277156" "20090228578" "20060064720" "9602512" "8424041" "8650283" "20100234052" "20110125765" "20170228789" "9087182" "8108797" "20040128514" "20010031066" "20100235476" "20110265119" "8572257" "20100255890" "7812854" "9037999" "20060149813" "20050165849" "7720686" "8451232" "9178946" "20090228544" "7644172" "6792452" "8565740" "20060068911" "20070005504" "20130014169" "8041775" "20060156353" "20080234000" "8555395" "7519073" "9326016" "20080097984" "7721103" "20120130834" "20110153849" "20070124772" "7525975" "8682750" "7571458" "8607287" "20080034081" "20090005080" "20080177713" "9201882" "7734684" "20060080702" "8589779" "20080141303" "7308487" "20110287757" "20060265477" "8265862" "6704864" "20110016488" "20070055997" "20090204885" "20080133551" "20100134299" "7908467" "20090125935" "20050266884" "8554938" "9077859" "8898708" "7886318" "8166139" "20060080408" "20070271366" "8843589" "20060242275" "20090070673" "20060259436" "20100297964" "20110197236" "8310985" "8990119" "7593982" "7535465" "6609105" "20090094512" "20090054092" "20070124779" "6892230" "20020068558" "20070124201" "20050010963" "20100211636" "20030220835"	US-PGPUB; USPAT	OR	OFF	2018/12/15 17:12

		"20120110126" "20100043046" "8078751" "8943539" "20040068756" "20100332994" "20110016503" "20090156251" "9826046" "20090164641" "8190754" "20040088731" "8862762" "7558838" "8875213" "20100199219" "9277292" "20080004952" "8516125" "20060085349" "20110311095" "8060631" "7218243" "8621531" "8341527" "7849160" "20100094726" "20070048713" "8544046" "8615164" "7797431" "7881658" "9118934" "20080242280" "20080281805" "20120081299" "9167301" "8245142" "20080155006" "20080281943" "20080028223" "8205081" "20100138884" "20080092045" "7237104" "20110040658" "9178954" "20080148310" "20090150553" "8898715" "20060259429" "20120131626" "20110282721" "8214338" "20090063660" "7856225" "20040033821" "9516357" "20120042385" "8954597" "7308644" "8023935" "20110040615" "20070288985" "20100145861" "8635196" "20040205811").PN.				
S8	200	("20090094341" "20110106910" "20050172309" "20100058220" "7937450" "7865366" "7840977" "20080275864" "20120062471" "6856990" "20120054616" "20040268451" "20060253417" "20090144801" "20040254887" "20080271066" "20100011135" "20060085835" "9100702" "20090177966" "7751807" "8607263" "8336077" "8392959" "9524072" "6243707" "9083791" "9990439" "20030140121" "20030221127" "8151259" "9584563" "20120084653" "7787749" "20070157234" "20040019497" "20050091311" "7739596" "20110145721" "20120226912" "20080033918" "20120253937" "7761898" "7945616" "8776122" "20070043766" "20080209329" "7996496" "7925300" "20060222322" "20040175097" "7647430" "7860531" "8561202" "20100228880" "7383229" "20030103088" "20070079352" "20020033844" "20080181575" "7269634" "20050044189" "20110179139" "20120005702" "20030189509" "9582507" "8413056" "8713304" "20070157240" "9021522" "6725281" "20040248561" "9351048" "7269854" "7602756" "8407609" "20050060527" "8893203" "8063923" "20070207795" "8458740" "20080165143" "20030145338" "9269086" "20090271831" "7379661"	US-PGPUB; USPAT	OR	OFF	2018/12/15 17:13

		"20040174905" "20090100182" "6884172" "20100081472" "7894703" "20080194276" "8005345" "20050210391" "20100169410" "7149208" "20110021219" "8707347" "9219729" "20060117344" "20100279735" "7953872" "8910218" "20090171715" "8219911" "20050114468" "9639619" "20090019492" "7694235" "8112815" "20100186034" "20120066338" "9253205" "8025572" "20020035621" "20080016196" "20070124416" "8315950" "7039858" "7219308" "20070260604" "20050166232" "20080307339" "8918461" "20090276633" "20080052742" "7310770" "8621533" "20030188320" "7831899" "20070174147" "20040174858" "20120011449" "20070150286" "9342662" "20070157241" "8914394" "8499088" "20110179184" "20090307731" "8386465" "9100549" "8332478" "7953387" "20080301189" "8317618" "8185475" "20030060157" "7103834" "7089307" "20090138922" "20120151509" "8122248" "8949860" "20060075426" "20040175098" "20110066843" "6965770" "7426637" "20100050096" "20090276439" "7231592" "7584353" "20090298490" "8732234" "20060253330" "6192340" "20040174863" "8112810" "20060190413" "20100211466" "20060282864" "20140289747" "20120092444" "20110162009" "6725260" "20080183584" "20090280784" "20070178889" "20040148638" "20060181982" "8219720" "20070101361" "7603437" "20090319695" "20080162623" "20040175096" "20070038717" "20070196802" "20060012813" "7133837" "20070066348" "20120147825" "20060047774" "20070288967" "8775938" "20090049297" "20060282319" "20090133070" "7500177").PN.				
S9	200	("7130895" "8843590" "20080249986" "8578502" "20020112002" "20080222520" "20090303186" "20070250695" "20050120305" "7339493" "7558846" "20080320543" "7308645" "20100057882" "9769544" "20080229204" "8267790" "20020165024" "20090257729" "7624416" "7831605" "20090215477" "20070078949" "20080221948" "20120077586" "20070066291" "8432489" "20090049052" "20090307719" "20100174776" "20100082743" "20070157260" "20060053375" "20100333143"	US-PGPUB; USPAT	OR	OFF	2018/12/15 17:13

"7747782" "8539533" "10108730"
"20090265789" "20060181963"
"8577399" "8266223" "20100146544"
"8103307" "8577338" "20060277308"
"20090298485" "7761602" "8089503"
"8849659" "9826273" "8346605"
"20040183756" "20090307658"
"20060172700" "20050076383"
"9955205" "20120047156" "7640327"
"20120078937" "20040225564"
"6760916" "20110072456" "8826445"
"20030237043" "20110179441"
"20110185392" "9367489"
"20100184422" "9401080" "8856844"
"20040253945" "20130018878"
"20070048712" "8156206" "8577971"
"7376581" "7934170" "8443382"
"9047375" "9756170" "7739584"
"8438596" "7299304" "7533061"
"20080250238" "7995992"
"20120133731" "20070250716"
"7818350" "7817989" "20090265793"
"20030067908" "20110320626"
"9253272" "8584184" "8667521"
"20090006570" "20100138487"
"20110064387" "20030048295"
"20120166655" "20120266066"
"20060195366" "20040133848"
"20060195521" "7853893" "8429687"
"6195693" "7711795" "20050120301"
"20030050058" "20100257569"
"20030061607" "7587372"
"20070086445" "20050022110"
"7254825" "20060190616" "8121843"
"6708203" "20020100052"
"20110061071" "8462645" "8271575"
"20070245019" "9417758" "7937108"
"20070016671" "8881210"
"20110306368" "10027998"
"20090234923" "20050060755"
"20070220024" "9292368"
"20070294726" "7973978" "8667299"
"7421482" "20110185048"
"20110236872" "20110067059"
"20080256563" "8666528"
"20030012403" "20100134275"
"7624417" "20090265549" "8307390"
"20090144204" "8814692"
"20110164264" "7996775"
"20020046407" "20110099277"
"7487230" "8201109" "20040220791"
"20090217365" "7407092" "6636892"
"20050060542" "7895076" "8244595"
"20110040731" "8255968"
"20090265557" "8813166"
"20030120748" "20080118227"
"7956272" "20080282083"
"20090061824" "10091535"
"20020112237" "9367530"
"20060291434" "7787818"
"20050091302" "8996420"
"20060075427" "8467724" "8970668"
"20080242221" "9959897" "8090659"
"20020049978" "20110004943"

		"8704863" "8387096" "20100241491" "20080152097" "20070022178" "20100064227" "9384299" "20110078721" "6834308" "20080065486" "20090013059" "7412538").PN.				
S10	200	("20060136980" "8359382" "20080318529" "20020178360" "20100134815" "7904069" "20100299687" "20060161662" "20110289199" "20060129938" "20070117635" "20100299697" "20070169087" "20110173054" "7499765" "6546419" "8614625" "9338276" "20010011284" "20060015201" "6170060" "8391155" "8087091" "8055588" "20100046030" "8678928" "20110271194" "20120066715" "8244589" "8521832" "7168051" "20070063039" "20050235338" "20090100062" "20080052252" "6791588" "20040249851" "9143341" "7469829" "8087047" "20030140107" "20100273525" "20120023126" "8645303" "20020004855" "20050078944" "20100174655" "20110277006" "8107921" "7406508" "20050010866" "20080194175" "20040236945" "20070300261" "20050022210" "20080219638" "20110166860" "20120036585" "20080288600" "9747622" "20070282959" "20080307462" "7308483" "20080235733" "20050132405" "20120042006" "9191610" "7107045" "20060258289" "20040024580" "20100299709" "9172915" "20060136964" "20020053078" "20010030667" "7379901" "9137577" "20170085919" "8676711" "20060021057" "20060168126" "20110185393" "8984562" "20080250239" "7570761" "7920855" "20080288461" "20100332218" "7765280" "20070107032" "8589795" "20100057469" "20090228792" "7412666" "8359031" "7895622" "20070066343" "9451326" "8804039" "7566274" "20080109528" "8332892" "8856833" "20040177371" "6496802" "20120185886" "20060282774" "7567671" "9378516" "20080109839" "20060085821" "20070061759" "20040103184" "7466823" "20100095337" "20070061364" "20050071780" "20100223314" "20110131607" "20080081699" "20100154021" "7505605" "20060294558" "20060120560" "8806530" "7983994" "8886545" "20100137036" "7555543" "20070198532" "20110228763"	US-PGPUB; USPAT	OR	OFF	2018/12/15 17:14

		"20120266084" "8316399" "20060190410" "7159174" "6249914" "20020062252" "20030101294" "8321401" "20100223393" "7120871" "20040260800" "20120192055" "20050091111" "20100186057" "20100312833" "20090013265" "9003473" "20040100492" "7987491" "20050022127" "8990702" "20030229900" "9377924" "20090088206" "20010039659" "8090403" "9076155" "20080180391" "20080214236" "20120078885" "8909740" "20110193780" "20070185840" "20110296472" "20110277002" "7555528" "20120254453" "20050246624" "8141117" "7653446" "9407686" "20110161996" "9443377" "8417720" "7444438" "5957695" "20020092021" "20120078953" "20070073596" "20110113450" "20050229213" "8909296" "7831930" "7996228" "20070063032" "7921446" "7171018" "20070195987" "20090152342" "20020002541" "7711564" "8443288" "8622839" "20080278772" "20090133078" "8073590" "20080065507" "20110282965" "20020082922").PN.				
S11	200	("20110131297" "20070055935" "8736561" "20050021470" "8914402" "20050055716" "20080307463" "8606848" "20100306154" "20090144168" "20020194601" "20110072107" "20100198860" "20030009694" "8949266" "20020013852" "20130031594" "6259449" "20110055026" "20100134843" "20050057538" "7392285" "20070003224" "20070033531" "7624411" "7738918" "8661464" "20050058319" "7637424" "20040044569" "20050240665" "20040174896" "20060195600" "20070073845" "20080065567" "8732232" "20080320396" "7899915" "20090181641" "20040220926" "8813112" "20110277003" "20100280641" "8433306" "20090133069" "7984097" "8391774" "8401366" "7716371" "9911126" "20090251409" "20100046744" "8918812" "9788043" "7480746" "7877103" "9286388" "20060280303" "20070199030" "20070124781" "9961399" "7415430" "20090006192" "7814022" "20110213681" "8219493" "20090258633" "8683510" "8559933" "20090046321" "20080080836" "9807224" "20030041110" "8055688" "7392481" "7632186" "20130018995" "7818423" "20070113264" "8117644" "20080288890" "20030060240"	US-PGPUB; USPAT	OR	OFF	2018/12/15 17:14

		"20050108659" "20060218294" "7676436" "20060031549" "8140649" "20120131570" "8442423" "7523225" "8527640" "20060282512" "20070239611" "7464194" "20090249400" "20070043616" "20060242590" "7386480" "7873708" "20040025190" "20130014190" "7949730" "7716385" "7716273" "7024256" "20090037382" "8196044" "20050004981" "8307286" "6487663" "20110249079" "7673314" "20040070600" "20070127887" "20030014436" "20060282389" "20090141875" "7647614" "20090282111" "8402506" "20070019069" "7870197" "20090217084" "20100119208" "20070022438" "20080222687" "9733804" "20070155311" "9392101" "8620994" "8528032" "20060123339" "8738537" "20080167968" "9003309" "20040268400" "8332530" "20110077046" "8868678" "20040163073" "8700534" "9088826" "8042140" "7870585" "8126313" "8261300" "20070066279" "8793332" "8122466" "8537982" "20110185296" "9621855" "20100241699" "8583602" "8803940" "20100169463" "9318152" "8745228" "20070165144" "20110041154" "20040199615" "20070022447" "20100100915" "20050169467" "8583915" "20110145768" "9893908" "8467773" "20080133759" "9288548" "20070063037" "8261315" "20100325660" "20070050402" "20060095472" "7802285" "20120266077" "20090144130" "8103371" "20120108293" "8060407" "20040098754" "8107929" "9083600" "8959085" "20090183242" "20090031358" "20100251284" "7437434" "20050267935" "7904344" "20050041150" "7590696" "20110083073" "20080307456" "8001187" "20090150406" "20070157194" "20040012613" "20090247221").PN.				
S12	200	("20060023257" "9124441" "20080189391" "7991493" "20100071013" "20120233036" "8266662" "6907225" "9665629" "20090093897" "8966101" "20090215478" "7493283" "20060282513" "20050245241" "20080201201" "8060909" "7472353" "20100095332" "8239889" "8527422" "20100064307" "20080004978" "8028323" "20090228897" "20080319871" "20110163969" "9098856" "6529949" "20100114857" "20040051812" "9135626" "7895532"	US-PGPUB; USPAT	OR	OFF	2018/12/15 17:15

"8968077" "8429516" "20090320073"
"9113207" "20110183654"
"20110033166" "8972862" "9037674"
"20030236907" "20120059910"
"20090133090" "20090150941"
"20070142024" "20100303450"
"20090150937" "20080109852"
"20080263600" "20120026278"
"8407809" "20120050012"
"20070288986" "8140390" "8386304"
"7506802" "20050097503"
"20090276485" "20120130845"
"20140040445" "7657920"
"20100328701" "20090094096"
"20080027567" "20080003993"
"20090142042" "7519703"
"20080132254" "7953386"
"20100235381" "20070174487"
"20080260115" "20100131642"
"20110004841" "20110151844"
"20090204487" "8806340"
"20070005783" "20030021441"
"20060282847" "8301648"
"20060184609" "8519964"
"20070156841" "6934837"
"20070286420" "20040088180"
"20030095525" "20110041076"
"20120198347" "20070117617"
"9390441" "20060095471"
"20110195790" "20060150120"
"7739709" "20100064220" "7984098"
"7167703" "20070250912" "8312079"
"7857217" "9153125" "20070201502"
"20100077441" "7877776" "8041829"
"20060041893" "20110202424"
"20060129688" "20060047844"
"7380260" "20110302052" "7761892"
"20090327244" "7849131" "9454341"
"8380786" "9292866" "8161172"
"20020124249" "20050226166"
"20120084662" "8601526"
"20070101362" "10102208" "8473558"
"8407756" "20100228630" "8644463"
"20110072106" "8973072" "9178712"
"8943409" "20030115293"
"20120192064" "20120158531"
"20120158514" "8325920" "9167302"
"20110054899" "8051454" "8639733"
"20100319017" "20100070876"
"20080147883" "8024186" "7056217"
"20080098357" "20020077170"
"20090043869" "8078230" "6970916"
"8750687" "20090164653"
"20050021494" "6507727" "7735107"
"20040031058" "20060282514"
"20100279669" "8244898"
"20070061309" "10122569"
"20110321107" "8595186"
"20080016255" "8510123" "7761090"
"20060112336" "8473865" "8812614"
"20050216942" "20100198822"
"20070180485" "7526573"
"20060064350" "20030194211"
"20020124247" "20100319026"

		"20070066289" "20030212613" "7925729" "7941819" "20100138012" "7441019" "7555466" "20090197681" "20070066356" "20100115568" "20130014171" "8336773" "20100222102" "20100129057" "8272019" "7738919" "8016202" "7483958" "20100185448").PN.				
S13	200	("20020049037" "6952835" "8412839" "7930561" "20030033420" "20110099286" "8091110" "20120005287" "8131458" "20070198698" "6910068" "8869226" "8072629" "9363470" "20090144144" "20060227761" "9256888" "20090098857" "20070027857" "9002895" "20080184304" "20060174348" "9693013" "7421656" "20030032409" "6408128" "8306859" "20070208564" "20140033025" "20070063012" "7925973" "20070099694" "8051452" "8856641" "8351907" "20110138327" "9185171" "20080207233" "20020116476" "7793325" "8458369" "20100146051" "20120054615" "7660572" "20120246240" "20080133416" "20100322035" "20110113122" "20060161865" "20120072957" "7707614" "8688709" "8600429" "9131256" "20050039133" "20100105454" "20070038931" "8838686" "20110145726" "20100198982" "20110072078" "20070204308" "20090138484" "9389822" "7353267" "20120246585" "20090187486" "20120054811" "7188342" "20050138192" "20120078954" "8793748" "20050074018" "20090319672" "20090325712" "8880624" "20090157513" "20100185736" "7356765" "20080120196" "7873978" "7724399" "8938217" "20100023885" "20060206563" "20100153207" "7523507" "6671807" "20090005071" "20080250319" "7634780" "20120086857" "20100321201" "20060206340" "7523161" "8978066" "20020097984" "20090104872" "20100206950" "20090325642" "8645838" "9355076" "20090270085" "20030236906" "20080300983" "20070281607" "20120131465" "20100077095" "8255552" "8176521" "20070067253" "7103315" "20050149508" "20100186038" "20080188209" "8130668" "20100077433" "20070106681" "20080172243" "8166511" "7676827" "20100317335" "20040117843" "7375673" "8023929" "20060085352" "20070294622" "20070066355" "20010033736" "20070142022"	US-PGPUB; USPAT	OR	OFF	2018/12/15 17:16

		"8875172" "8062134" "7545784" "20100263004" "9900557" "7921154" "8589580" "20060107215" "20110197264" "20020002707" "20110022661" "8788589" "8209376" "8065710" "20110060587" "20070162502" "8483668" "7890661" "20080313146" "8306507" "20050283810" "20120147268" "20080184306" "7574448" "20070180479" "20090150405" "20110166918" "8522279" "20070018952" "20110276335" "20090235297" "6792323" "20110055256" "20080141132" "20110161377" "8886234" "20040045040" "20090144129" "8769528" "7548948" "8280949" "8423427" "8990214" "8910295" "20100174783" "20100313221" "9215506" "9015270" "20020199001" "20080293387" "8966567" "20070100757" "8687016" "20100049606" "20050166153" "20060282390" "20040243482" "9690866" "20080187112" "20120054808" "8458741" "9037502" "20060140170" "20120252557" "20070199076" "20120005041" "20020146122" "20090277956" "9300919" "8250179").PN.				
S14	100	("7937451" "20110078572" "8689113" "20100125882" "20110238731" "20080139193" "8463890" "20050251576" "20020113820" "20120017250" "20100313169" "20110035741" "20060072721" "7206853" "20090006191" "8666367" "20030149988" "7848777" "20080288460" "8209618" "20080120330" "8990692" "8495235" "20080140702" "8943545" "20070135087" "20030095791" "20130144855" "8730028" "20110191163" "7073189" "8577808" "20100225949" "8484332" "7747280" "20030212804" "20030028892" "20110060688" "7966494" "20090049097" "20120060104" "8806341" "20040024889" "20090013348" "7636300" "20090207984" "20120159327" "8015446" "20050155067" "20090106659" "8156193" "20100082681" "20100075641" "8850477" "8635073" "20090298583" "8141111" "8504946" "20060025117" "20070088727" "20090164309" "20090276547" "8156547" "20040243466" "7558597" "8145637" "20060095502" "6484199" "20070066358" "20110202956" "20120023265" "20120127196" "7938727" "20080256205" "9406043"	US-PGPUB; USPAT	OR	OFF	2018/12/15 17:16

		"20110016492" "7251832" "8789052" "20120042047" "20100131979" "8280772" "20100313213" "8014542" "20040181667" "20080010336" "20110173547" "9788068" "20090254778" "20120124615" "7987492" "8391773" "20140101722" "7558563" "20120258742" "20120042391" "20060282783" "7962948" "20080168052" "8406386" "20090006213").PN.				
S15	4	((("TOUCHSTREAM") near3 ("TECHNOLOGIES") near3 ("INC"))).AS,AANM.	USPAT	OR	OFF	2018/12/15 17:17
S16	10	((("Strober") near3 ("David"))).INV.	US-PGPUB; USPAT; USOCR	OR	OFF	2018/12/15 17:17
S18	9	("13".src. and "157821".ap.) or "13157821".RLAN.	US-PGPUB; USPAT; USOCR; DERWENT	OR	OFF	2018/12/15 17:18
S19	3	("13".src. and "532546".ap.) or "13532546".RLAN.	US-PGPUB; USPAT; USOCR; DERWENT	OR	OFF	2018/12/15 17:18
S20	5343	(715/716).ccls.	US-PGPUB; USPAT; USOCR; DERWENT	OR	OFF	2018/12/15 17:20
S22	24477	(G06F17/30846 G06F9/452 G06F17/30864).cpc.	US-PGPUB; USPAT	OR	OFF	2018/12/15 17:22
S23	2500	S2 S3 S4 S5 S6 S7 S8 S9 S10 S11 S12 S13 S14	US-PGPUB; USPAT	OR	OFF	2018/12/15 17:23
S24	31	S22 and S23	US-PGPUB; USPAT	OR	OFF	2018/12/15 17:24
S26	69	S20 and S23	US-PGPUB; USPAT	OR	OFF	2018/12/15 17:25
S27	1	("20090248802").pn.	US-PGPUB; USPAT	OR	OFF	2018/12/15 17:28
S28	1	"8880491"	US-PGPUB; USPAT	OR	OFF	2018/12/15 17:38
S29	192	S23 and "first format"	US-PGPUB; USPAT	OR	OFF	2018/12/15 17:38
S30	100	S23 and "first format" and universal	US-PGPUB; USPAT	OR	OFF	2018/12/15 17:38
S31	82	S23 and "first format" with "second format" and universal	US-PGPUB;	OR	OFF	2018/12/15 17:40

			USPAT			
S32	0	S23 and "first format" with "second format" and universal near2 command	US-PGPUB; USPAT	OR	OFF	2018/12/15 17:40
S33	169	S23 and "first format" with "second format"	US-PGPUB; USPAT	OR	OFF	2018/12/15 17:40
S34	19	S20 and "first format" with "second format"	US-PGPUB; USPAT	OR	OFF	2018/12/15 17:41
S35	1	("8433812").pn.	US-PGPUB; USPAT	OR	OFF	2018/12/15 17:43
S36	35	("20020129359" | "20030123846" | "20030182469" | "20040010560" | "20040210450" | "20050021590" | "20050091597" | "20050273496" | "20060069797" | "20060152575" | "20060282855" | "20070074258" | "20070118642" | "20070124737" | "20070174487" | "20070271338" | "20090077041" | "20120030366" | "5452435" | "5831609" | "6354748" | "6401124" | "6412031" | "6466939" | "6615199" | "6701383" | "6738356" | "6909878" | "7116894" | "7178106" | "7617523" | "8060631" | "RE37418").PN. OR ("8433812").URPN.	US-PGPUB; USPAT; USOCR	OR	OFF	2018/12/15 17:43
S37	0	S23 and "first format" with "second format" with (play near2 command)	US-PGPUB; USPAT	OR	OFF	2018/12/15 17:44
S38	0	S23 and "first format" with "second format" with (play near2 control)	US-PGPUB; USPAT	OR	OFF	2018/12/15 17:45
S39	0	S23 and "first format" with "second format" with play	US-PGPUB; USPAT	OR	OFF	2018/12/15 17:45
S40	80	S23 and "first format" with "second format" and play with command	US-PGPUB; USPAT	OR	OFF	2018/12/15 17:46
S41	2	("8880491").PN.	US-PGPUB; USPAT; USOCR; DERWENT	OR	OFF	2018/12/16 14:59
S42	200	("8880491" "20120130971" "9338494" "20120210371" "8621507" "20120210350" "9924229" "9258613" "9628842" "20120210344" "20120117586" "20120112986" "9426510" "20120210378" "9264758" "8510769" "20120210365" "8949376" "9521453" "9648380" "8789086" "10097880" "8704854" "20120210343" "8984626" "20110066942" "20110064378" "20100180010" "20110063317" "20110064385" "20110064377" "20080189295" "20110067099" "20120117588" "20110066944" "20110066663"	US-PGPUB; USPAT	OR	OFF	2018/12/16 15:00

"20110067066" "9253222"
"20110066489" "8660545"
"20100235443" "10091345"
"20120210226" "7917932"
"20060008256" "20080209021"
"20090156181" "20080155470"
"20060253874" "8965920"
"20090061841" "20110064386"
"8265612" "8417096" "8661494"
"8868785" "20080155057"
"20080212945" "8175638"
"20080212944" "20120011558"
"20060265427" "20110137976"
"20120210225" "20080176540"
"20080273077" "20100153410"
"20060224761" "20100281108"
"9633656" "8904455" "20110088057"
"20110135283" "8473976"
"20110170842" "20130272681"
"8682145" "20040133657"
"20110145581" "20110131180"
"20120117590" "20060259930"
"20080160909" "20060173974"
"20070157072" "20120210238"
"8897737" "20080059533" "8271341"
"8108342" "8359612" "20080214215"
"9092519" "20110289108"
"20080209075" "20080175569"
"20080201751" "20020140855"
"20020040475" "20080133736"
"20090156179" "20100325238"
"20080180401" "7102688" "8468130"
"20060062544" "20080187115"
"8160495" "20130022185"
"20090069915" "20120323349"
"20080305738" "20130024539"
"20100325239" "20040133914"
"20090106200" "7966638"
"20060248557" "20130022335"
"20080175566" "20080160908"
"20080184317" "20080184359"
"20090304344" "20080182510"
"20080182508" "9055269"
"20060291506" "20110197237"
"20080183840" "20080182509"
"20060184431" "8700739"
"20060253782" "20080201375"
"20080162655" "20080163302"
"20090113315" "9009589" "8832564"
"20040086120" "20130097302"
"20080010372" "20100064332"
"20110004517" "7881656"
"20080155129" "20080201376"
"8813127" "8099455" "9490998"
"7711605" "20080244681"
"20040244031" "20080177860"
"8555318" "20090058822" "8606948"
"20090304346" "20080178238"
"6587127" "20120005311" "9275054"
"20110119637" "8090768" "8886759"
"20080276279" "20080155634"
"20100235762" "20080160910"
"20100287070" "8112032"
"20060059095" "20090049156"

		"20090030978" "20080141307" "8818179" "8556722" "20100042749" "20120210245" "8107977" "8271889" "20110009051" "20070136778" "20050076092" "20100042499" "20080155109" "8290929" "20040165006" "20070294096" "20060026162" "20070265073" "20090011780" "20100281042" "7650361" "20070288836" "8634703" "20120079126" "9009758" "9563702").PN.				
S43	200	("8046672" "20090112839" "7451177" "20110231867" "9178923" "8281001" "20120254929" "20100049835" "20090158136" "8751672" "20080256129" "20110158610" "8521857" "20080189752" "20100107201" "20120131098" "20040044725" "20090069038" "20110185378" "8695030" "20100146411" "20120210352" "20050177853" "20090177736" "20070299976" "20110060994" "20030110503" "8407755" "20040133908" "9065683" "8327403" "7956848" "20070204011" "8176121" "7076495" "20110150432" "20120210377" "20060206581" "20120059884" "20020156909" "8350971" "20020140571" "8204485" "20100161729" "7376414" "8402498" "8230341" "20020129089" "20080281689" RE44298 "20050208930" "9113195" "8407303" "7899808" "6476825" "20080229335" "8246454" "20040224723" "9769414" "20080098433" "9100726" "8930561" "8001471" "20100273553" "20020161794" "20100131848" "9405710" "20090019061" "20020169540" "8244315" "20090286560" "8315608" "20100333032" "20020087887" "20110087348" "8677402" "8707361" "9794647" "20060041926" "20100085857" "8301784" "7975062" "7224260" "8886710" "20080028023" "20120036543" "20120124625" "20060276230" "20090280792" "20070199014" "7870272" "7840631" "20100016080" "8769578" "7574723" "20090125609" "20100131978" "20070204057" "9137576" "20100333135" "20090112874" "20100333151" "20050208929" "8793305" "7426532" "20020151327" "20100318357" "8316052" "8094794" "8775647" "8266173" "20120117587" "20050080496" "20120079095" "6882299" "20080133529" "20120131609" "20080148328" "7890957" "20110289460" "20100333136" "20080066080"	US-PGPUB; USPAT	OR	OFF	2018/12/16 15:00

		"9003500" "7607582" "20100293598" "20090100065" "20040226048" "20100042747" "20110099157" "20120030701" "20070198744" "20080216153" "6938101" "20100070925" "20100306402" "20090113301" "20090047000" "20090254950" "8918645" "20030135859" "20050088333" "8467275" "20050216606" "20090156170" "20120078997" "20020162112" "20090156183" "20110320476" "20020143805" "9201627" "7784065" "20020161780" "8457661" "20140032636" "20120079276" "20090259711" "20070264982" "8090694" "20070006255" "8359351" "20100306815" "7506019" "20050091359" "20100057583" "7689510" "20100299761" "9271022" "6104334" "7475155" "20060136572" "8185477" "8676034" "20080140664" "7775886" "7962097" "8214422" "20050198353" "20060242259" "20070174624" "6769028" "8001236" "20100235891" "7716224" "20080243828" "20080243788" "20030233349" "7376696" "20070250194" "8077263" "9201668" "7702279" "8713605" "8954444" "20080124055" "20070250597" "20050210101" "7653691" "20120210366" "20060075429" "8464302").PN.				
S44	200	("20100169347" "8943169" "20060161635" "7143214" "8583758" "20070198633" "20080098426" "20120206317" "8792429" "8874244" "20060176271" "8150934" "20120263440" "9066199" "20080195698" "8381310" "20070204003" "8249559" "20060136577" "20030014630" "20110167447" "20120052941" "20110239142" "8126200" "20100205628" "8234282" "7565294" "20060253525" "20030132953" "20070168543" "20100185306" "9219734" "8291028" "20080114861" "8180645" "20120221645" "8887221" "20110163939" "7046161" "9525838" "8656424" "8875180" "20130166423" "20110247035" "20100169977" "8171520" "8977710" "20090249222" "20110321071" "20120075529" "20060004834" "8150911" "8374923" "20120079606" "20110087603" "8990215" "20110107225" "20040044723" "7873578" "8316389" "8209396" "20090089838" "20120039467" "20110069936" "9479737" "20090234939" "9716774" "8812850" "20070016865" "9391808"	US-PGPUB; USPAT	OR	OFF	2018/12/16 15:00

		"20090182806" "20090182805" "20090281874" "20070124769" "20100017821" "9374605" "20080134237" "20120023408" "7779097" "20080290987" "20070169115" "8860804" "6182094" "6591247" "6834294" "20090177303" "20070250195" "20130047083" "20080109298" "20090319599" "20120222061" "20120124475" "20110225066" "7725102" "20100169939" "20030141987" "20090234955" "8510847" "9067150" "20050177745" "8677392" "20110029604" "20080097632" "7996869" "9167208" "20060184968" "20060094360" "8079055" "20070121651" "20090024943" "20070005727" "8768307" "20080294674" "8826312" "20080229352" "8494907" "20100169942" "7734724" "8073380" "8122464" "20060085825" "8798445" "7054863" "8667163" "7895633" "8112504" "7519681" "20050177624" "6925495" "20080021775" "20080307477" "20080243694" "20120151525" "8577420" "20080276266" "20060174026" "8667546" "20110211813" "8503861" "8621338" "20090172758" "20060048201" "20080107102" "9356982" "9078043" "20100144329" "8036418" "20060259589" "20030043191" "20030182139" "20110055218" "20090198357" "8352576" "20110265111" "8806537" "9786159" "20060159109" "8588590" "7536708" "20090198358" "7433922" "20100208069" "20070277201" "20050058260" "20090052863" "20090043692" "20100031306" "20020087661" "20120072270" "8561114" "20050204309" "20070005450" "8490127" "8943122" "20090248182" "20090157792" "20090029685" "20080320508" "20030005429" "20080077483" "8352616" "7512882" "20040044724" "5732216" "9832532" "7519911" "20120042309" "20080256485" "6199076" "20090100477" "9883233" "20090064038" "20070288970" "20080205205" "20070073725" "20100235328" "20100036908" "8401681" "10080063" "20090172747").PN.				
S45	200	("8015263" "20120079080" "8978147" "20100071076" "20120124171" "8015491" "20110035668" "20060271977" "20060129458" "20100008586" "20020078144" "20100299701" "20060248570" "20100138761" "7721301" "9628746"	US-PGPUB; USPAT	OR	OFF	2018/12/16 15:00

"20030151618" "20110135271"
"20050286497" "20080155616"
"20070067309" "8213924"
"20030018971" "20100274858"
"20020069113" "9700791"
"20110138429" "20080195466"
"7454515" "20100031366"
"20100175093" "8081994" "7920901"
"20100106852" "20020161775"
"20090172726" "8296808"
"20080005130" "20060041639"
"20110119600" "20070183741"
"8700005" "20050251749" "8543095"
"6968364" "20060235700"
"20080195692" "20100064055"
"20100041457" "8438589" "7917439"
"8155582" "8671434" "20060068919"
"20090077584" "7979881"
"20110153048" "20110131604"
"20080141150" "20060123053"
"20120023521" "9152300"
"20090070438" "20110151905"
"20090186700" "20050149872"
"20110191677" "20090099858"
"9712582" "6829368" "20070124737"
"20100082567" "8601089"
"20110317634" "7069310"
"20110214147" "8204793" "8656040"
"7809802" "8452775" "8103957"
"20090177742" "20110289073"
"9626363" "20070028111"
"20110185312" "20050080878"
"8135865" "20040215741"
"20080222546" "8469813"
"20100082136" "20040148362"
"8611919" "20120054793"
"20110320963" "8429707"
"20030140090" "8271549" "8438287"
"20070204115" "8458749" "9864958"
"20060259588" "6956833"
"20100138298" "20060041640"
"8990104" "8832754" "20120023520"
"9124650" "20120173383"
"20100191608" "20060015649"
"20070055743" "9369776"
"20100299417" "9204193" "9055315"
"8799758" "20020007418"
"20040171376" "20070073726"
"9509796" "7814148" "8931010"
"8122004" "8437744" "20090117890"
"20110283311" "20050267994"
"7797242" "20090094511"
"20080293450" "20070189708"
"20050273827" "8739294" "8072956"
"20040177376" "9706160" "6603488"
"20090220216" "10057631"
"20050108769" "9116340" "8156176"
"8738639" "8149701" "7509178"
"20080155062" "8539093"
"20060265329" "20080117922"
"20080140523" "9414101" "9521174"
"20070209005" "20080244637"
"8069232" "8694531" "20100278321"
"8682262" "20110093892"

		"20100037264" "20080046919" "8417258" "7848959" "8051453" "20100251136" "20090228125" "20070016922" "20110184862" "7080030" "8689142" "7917645" "20120036549" "20100222090" "20050278435" "8965807" "20100150395" "20090099912" "9483755" "9519940" "20110137729" "20070073728" "20070048714" "7921309" "20040172481" "8526928" "20070245882" "9258326" "20120019400" "20050136949" "20080155663" "20100100636" "20080098432" "20120011553" "20100296654" "7155436" "6055560").PN.				
S46	200	("7593576" "20050265701" "6288716" "20110119149" "20080082381" "20090204639" "8380878" "8341513" "7627341" "20110164175" "20090043657" "7516213" "8606314" "20070073727" "20100138746" "8826145" "9135363" "8086226" "8495686" "8621541" "8589991" "20110138331" "8046802" "20100145809" "7818321" "20110035462" "20030229899" "9078082" "7873742" "7724716" "20110138415" "8631436" "20090017827" "20060208074" "20080189766" "20060179129" "20080215452" "20120096092" "8117062" "20050198574" "20050021478" "20110137728" "20110131600" "20110082761" "9824389" "20060159366" "7725360" "8856118" "20090052870" "20100011299" "7707601" "20060127037" "7487112" "20070100904" "20110219421" "7769819" "20120036584" "9171851" "20020091848" "20070239546" "20050091268" "20090102983" "20050210120" "20050108519" "20070250400" "20110218044" "8707366" "20100169464" "7792920" "20100313250" "7917933" "20100118200" "20050182828" "7689613" "8230466" "20070173266" "20070016653" "20030023505" "20050267883" "8291320" "8433611" "5721827" "20020124100" "6198479" "20090006644" "20120162537" "20070294292" "9933937" "20110179453" "20090318192" "9032296" "8868640" "7693992" "8909695" "7480703" "20080094400" "20080244010" "8375208" "7949722" "20090210493" "20080250431" "20080221909" "20090249418" "20090099859" "8095424" "20060182424" "6735628" "20050193094" "20070118426"	US-PGPUB; USPAT	OR	OFF	2018/12/16 15:00

		"8341210" "20110131518" "20080071834" "8660530" "20050055730" "20060193606" "8656446" "20110181780" "20090172108" "7178106" "20100198704" "7673315" "20110170837" "20090144624" "7472175" "20070155306" "20050055717" "20110185036" "9886599" "7337147" "8667152" "20060031551" "20110214045" "8060625" "20100257458" "20100138297" "20070162939" "20050278729" "20050193322" "20110289317" "8621025" "20090043870" "20080215507" "20050033855" "20080065974" "20070291710" "20090099836" "7426329" "8086575" "20010038392" "20070061845" "8244179" "20070061835" "20080200161" "20110126236" "20090063645" "20070174774" "20030122966" "8106742" "7487441" "20080147772" "20060085351" "7500007" "20050060756" "20040177375" "8621509" "20110026692" "20120079119" "20020069308" "8220708" "8977294" "8825468" "20070067315" "7920856" "20100087179" "20090006375" "20110269424" "8190692" "7988042" "20020169797" "20110197159" "20040025185" "9128961" "20050086696" "8176431" "20100241475" "20080027827" "20030065805" "20100070565" "20080320391" "8375131" "20020147699" "7578002" "20110113354" "20070050734" "8291459" "20090228807" "20110087971" "20080254832" "20120078952" "20080317441").PN.				
S47	200	("20110225417" "7966552" "20020107802" "8176506" "20110013885" "8935300" "20110289414" "9047516" "7756545" "7735012" "20170149600" "6944632" "7194235" "8463869" "20040103297" "20040068536" "8769297" "9635066" "20100299712" "8584171" "9681105" "7693902" "20110040894" "7574691" "20110181496" "20110078174" "20100161818" "20050039135" "7130616" "8498628" "7925299" "20090327449" "7356575" "20100279673" "8161411" "9015179" "20090018898" "20090049074" "7793823" "9277156" "20090228578" "20060064720" "9602512" "8424041" "8650283" "20100234052" "20110125765" "20170228789" "9087182" "8108797" "20040128514" "20010031066" "20100235476"	US-PGPUB; USPAT	OR	OFF	2018/12/16 15:00

		"20110265119" "8572257" "20100255890" "7812854" "9037999" "20060149813" "20050165849" "7720686" "8451232" "9178946" "20090228544" "7644172" "6792452" "8565740" "20060068911" "20070005504" "20130014169" "8041775" "20060156353" "20080234000" "8555395" "7519073" "9326016" "20080097984" "7721103" "20120130834" "20110153849" "20070124772" "7525975" "8682750" "7571458" "8607287" "20080034081" "20090005080" "20080177713" "9201882" "7734684" "20060080702" "8589779" "20080141303" "7308487" "20110287757" "20060265477" "8265862" "6704864" "20110016488" "20070055997" "20090204885" "20080133551" "20100134299" "7908467" "20090125935" "20050266884" "8554938" "9077859" "8898708" "7886318" "8166139" "20060080408" "20070271366" "8843589" "20060242275" "20090070673" "20060259436" "20100297964" "20110197236" "8310985" "8990119" "7593982" "7535465" "6609105" "20090094512" "20090054092" "20070124779" "6892230" "20020068558" "20070124201" "20050010963" "20100211636" "20030220835" "20120110126" "20100043046" "8078751" "8943539" "20040068756" "20100332994" "20110016503" "20090156251" "9826046" "20090164641" "8190754" "20040088731" "8862762" "7558838" "8875213" "20100199219" "9277292" "20080004952" "8516125" "20060085349" "20110311095" "8060631" "7218243" "8621531" "8341527" "7849160" "20100094726" "20070048713" "8544046" "8615164" "7797431" "7881658" "9118934" "20080242280" "20080281805" "20120081299" "9167301" "8245142" "20080155006" "20080281943" "20080028223" "8205081" "20100138884" "20080092045" "7237104" "20110040658" "9178954" "20080148310" "20090150553" "8898715" "20060259429" "20120131626" "20110282721" "8214338" "20090063660" "7856225" "20040033821" "9516357" "20120042385" "8954597" "7308644" "8023935" "20110040615" "20070288985" "20100145861" "8635196" "20040205811").PN.				
S48	200	("20090094341" "20110106910" "20050172309" "20100058220" "7937450" "7865366" "7840977"	US-PGPUB; USPAT	OR	OFF	2018/12/16 15:00

"20080275864" "20120062471"
"6856990" "20120054616"
"20040268451" "20060253417"
"20090144801" "20040254887"
"20080271066" "20100011135"
"20060085835" "9100702"
"20090177966" "7751807" "8607263"
"8336077" "8392959" "9524072"
"6243707" "9083791" "9990439"
"20030140121" "20030221127"
"8151259" "9584563" "20120084653"
"7787749" "20070157234"
"20040019497" "20050091311"
"7739596" "20110145721"
"20120226912" "20080033918"
"20120253937" "7761898" "7945616"
"8776122" "20070043766"
"20080209329" "7996496" "7925300"
"20060222322" "20040175097"
"7647430" "7860531" "8561202"
"20100228880" "7383229"
"20030103088" "20070079352"
"20020033844" "20080181575"
"7269634" "20050044189"
"20110179139" "20120005702"
"20030189509" "9582507" "8413056"
"8713304" "20070157240" "9021522"
"6725281" "20040248561" "9351048"
"7269854" "7602756" "8407609"
"20050060527" "8893203" "8063923"
"20070207795" "8458740"
"20080165143" "20030145338"
"9269086" "20090271831" "7379661"
"20040174905" "20090100182"
"6884172" "20100081472" "7894703"
"20080194276" "8005345"
"20050210391" "20100169410"
"7149208" "20110021219" "8707347"
"9219729" "20060117344"
"20100279735" "7953872" "8910218"
"20090171715" "8219911"
"20050114468" "9639619"
"20090019492" "7694235" "8112815"
"20100186034" "20120066338"
"9253205" "8025572" "20020035621"
"20080016196" "20070124416"
"8315950" "7039858" "7219308"
"20070260604" "20050166232"
"20080307339" "8918461"
"20090276633" "20080052742"
"7310770" "8621533" "20030188320"
"7831899" "20070174147"
"20040174858" "20120011449"
"20070150286" "9342662"
"20070157241" "8914394" "8499088"
"20110179184" "20090307731"
"8386465" "9100549" "8332478"
"7953387" "20080301189" "8317618"
"8185475" "20030060157" "7103834"
"7089307" "20090138922"
"20120151509" "8122248" "8949860"
"20060075426" "20040175098"
"20110066843" "6965770" "7426637"
"20100050096" "20090276439"

		"7231592" "7584353" "20090298490" "8732234" "20060253330" "6192340" "20040174863" "8112810" "20060190413" "20100211466" "20060282864" "20140289747" "20120092444" "20110162009" "6725260" "20080183584" "20090280784" "20070178889" "20040148638" "20060181982" "8219720" "20070101361" "7603437" "20090319695" "20080162623" "20040175096" "20070038717" "20070196802" "20060012813" "7133837" "20070066348" "20120147825" "20060047774" "20070288967" "8775938" "20090049297" "20060282319" "20090133070" "7500177").PN.				
S49	200	("7130895" "8843590" "20080249986" "8578502" "20020112002" "20080222520" "20090303186" "20070250695" "20050120305" "7339493" "7558846" "20080320543" "7308645" "20100057882" "9769544" "20080229204" "8267790" "20020165024" "20090257729" "7624416" "7831605" "20090215477" "20070078949" "20080221948" "20120077586" "20070066291" "8432489" "20090049052" "20090307719" "20100174776" "20100082743" "20070157260" "20060053375" "20100333143" "7747782" "8539533" "10108730" "20090265789" "20060181963" "8577399" "8266223" "20100146544" "8103307" "8577338" "20060277308" "20090298485" "7761602" "8089503" "8849659" "9826273" "8346605" "20040183756" "20090307658" "20060172700" "20050076383" "9955205" "20120047156" "7640327" "20120078937" "20040225564" "6760916" "20110072456" "8826445" "20030237043" "20110179441" "20110185392" "9367489" "20100184422" "9401080" "8856844" "20040253945" "20130018878" "20070048712" "8156206" "8577971" "7376581" "7934170" "8443382" "9047375" "9756170" "7739584" "8438596" "7299304" "7533061" "20080250238" "7995992" "20120133731" "20070250716" "7818350" "7817989" "20090265793" "20030067908" "20110320626" "9253272" "8584184" "8667521" "20090006570" "20100138487" "20110064387" "20030048295" "20120166655" "20120266066" "20060195366" "20040133848" "20060195521" "7853893" "8429687" "6195693" "7711795" "20050120301" "20030050058" "20100257569"	US-PGPUB; USPAT	OR	OFF	2018/12/16 15:00

		"20030061607" "7587372" "20070086445" "20050022110" "7254825" "20060190616" "8121843" "6708203" "20020100052" "20110061071" "8462645" "8271575" "20070245019" "9417758" "7937108" "20070016671" "8881210" "20110306368" "10027998" "20090234923" "20050060755" "20070220024" "9292368" "20070294726" "7973978" "8667299" "7421482" "20110185048" "20110236872" "20110067059" "20080256563" "8666528" "20030012403" "20100134275" "7624417" "20090265549" "8307390" "20090144204" "8814692" "20110164264" "7996775" "20020046407" "20110099277" "7487230" "8201109" "20040220791" "20090217365" "7407092" "6636892" "20050060542" "7895076" "8244595" "20110040731" "8255968" "20090265557" "8813166" "20030120748" "20080118227" "7956272" "20080282083" "20090061824" "10091535" "20020112237" "9367530" "20060291434" "7787818" "20050091302" "8996420" "20060075427" "8467724" "8970668" "20080242221" "9959897" "8090659" "20020049978" "20110004943" "8704863" "8387096" "20100241491" "20080152097" "20070022178" "20100064227" "9384299" "20110078721" "6834308" "20080065486" "20090013059" "7412538").PN.				
S50	200	("20060136980" "8359382" "20080318529" "20020178360" "20100134815" "7904069" "20100299687" "20060161662" "20110289199" "20060129938" "20070117635" "20100299697" "20070169087" "20110173054" "7499765" "6546419" "8614625" "9338276" "20010011284" "20060015201" "6170060" "8391155" "8087091" "8055588" "20100046030" "8678928" "20110271194" "20120066715" "8244589" "8521832" "7168051" "20070063039" "20050235338" "20090100062" "20080052252" "6791588" "20040249851" "9143341" "7469829" "8087047" "20030140107" "20100273525" "20120023126" "8645303" "20020004855" "20050078944" "20100174655" "20110277006" "8107921" "7406508" "20050010866" "20080194175" "20040236945" "20070300261" "20050022210" "20080219638"	US-PGPUB; USPAT	OR	OFF	2018/12/16 15:00

		"20110166860" "20120036585" "20080288600" "9747622" "20070282959" "20080307462" "7308483" "20080235733" "20050132405" "20120042006" "9191610" "7107045" "20060258289" "20040024580" "20100299709" "9172915" "20060136964" "20020053078" "20010030667" "7379901" "9137577" "20170085919" "8676711" "20060021057" "20060168126" "20110185393" "8984562" "20080250239" "7570761" "7920855" "20080288461" "20100332218" "7765280" "20070107032" "8589795" "20100057469" "20090228792" "7412666" "8359031" "7895622" "20070066343" "9451326" "8804039" "7566274" "20080109528" "8332892" "8856833" "20040177371" "6496802" "20120185886" "20060282774" "7567671" "9378516" "20080109839" "20060085821" "20070061759" "20040103184" "7466823" "20100095337" "20070061364" "20050071780" "20100223314" "20110131607" "20080081699" "20100154021" "7505605" "20060294558" "20060120560" "8806530" "7983994" "8886545" "20100137036" "7555543" "20070198532" "20110228763" "20120266084" "8316399" "20060190410" "7159174" "6249914" "20020062252" "20030101294" "8321401" "20100223393" "7120871" "20040260800" "20120192055" "20050091111" "20100186057" "20100312833" "20090013265" "9003473" "20040100492" "7987491" "20050022127" "8990702" "20030229900" "9377924" "20090088206" "20010039659" "8090403" "9076155" "20080180391" "20080214236" "20120078885" "8909740" "20110193780" "20070185840" "20110296472" "20110277002" "7555528" "20120254453" "20050246624" "8141117" "7653446" "9407686" "20110161996" "9443377" "8417720" "7444438" "5957695" "20020092021" "20120078953" "20070073596" "20110113450" "20050229213" "8909296" "7831930" "7996228" "20070063032" "7921446" "7171018" "20070195987" "20090152342" "20020002541" "7711564" "8443288" "8622839" "20080278772" "20090133078" "8073590" "20080065507" "20110282965" "20020082922").PN.				
S51	200	("20110131297" "20070055935"	US-	OR	OFF	2018/12/16

		"8736561" "20050021470" "8914402" "20050055716" "20080307463" "8606848" "20100306154" "20090144168" "20020194601" "20110072107" "20100198860" "20030009694" "8949266" "20020013852" "20130031594" "6259449" "20110055026" "20100134843" "20050057538" "7392285" "20070003224" "20070033531" "7624411" "7738918" "8661464" "20050058319" "7637424" "20040044569" "20050240665" "20040174896" "20060195600" "20070073845" "20080065567" "8732232" "20080320396" "7899915" "20090181641" "20040220926" "8813112" "20110277003" "20100280641" "8433306" "20090133069" "7984097" "8391774" "8401366" "7716371" "9911126" "20090251409" "20100046744" "8918812" "9788043" "7480746" "7877103" "9286388" "20060280303" "20070199030" "20070124781" "9961399" "7415430" "20090006192" "7814022" "20110213681" "8219493" "20090258633" "8683510" "8559933" "20090046321" "20080080836" "9807224" "20030041110" "8055688" "7392481" "7632186" "20130018995" "7818423" "20070113264" "8117644" "20080288890" "20030060240" "20050108659" "20060218294" "7676436" "20060031549" "8140649" "20120131570" "8442423" "7523225" "8527640" "20060282512" "20070239611" "7464194" "20090249400" "20070043616" "20060242590" "7386480" "7873708" "20040025190" "20130014190" "7949730" "7716385" "7716273" "7024256" "20090037382" "8196044" "20050004981" "8307286" "6487663" "20110249079" "7673314" "20040070600" "20070127887" "20030014436" "20060282389" "20090141875" "7647614" "20090282111" "8402506" "20070019069" "7870197" "20090217084" "20100119208" "20070022438" "20080222687" "9733804" "20070155311" "9392101" "8620994" "8528032" "20060123339" "8738537" "20080167968" "9003309" "20040268400" "8332530" "20110077046" "8868678" "20040163073" "8700534" "9088826" "8042140" "7870585" "8126313" "8261300" "20070066279" "8793332" "8122466" "8537982" "20110185296" "9621855" "20100241699" "8583602" "8803940" "20100169463" "9318152" "8745228" "20070165144"	PGPUB; USPAT			15:00

		"20110041154" "20040199615" "20070022447" "20100100915" "20050169467" "8583915" "20110145768" "9893908" "8467773" "20080133759" "9288548" "20070063037" "8261315" "20100325660" "20070050402" "20060095472" "7802285" "20120266077" "20090144130" "8103371" "20120108293" "8060407" "20040098754" "8107929" "9083600" "8959085" "20090183242" "20090031358" "20100251284" "7437434" "20050267935" "7904344" "20050041150" "7590696" "20110083073" "20080307456" "8001187" "20090150406" "20070157194" "20040012613" "20090247221").PN.				
S52	200	("20060023257" "9124441" "20080189391" "7991493" "20100071013" "20120233036" "8266662" "6907225" "9665629" "20090093897" "8966101" "20090215478" "7493283" "20060282513" "20050245241" "20080201201" "8060909" "7472353" "20100095332" "8239889" "8527422" "20100064307" "20080004978" "8028323" "20090228897" "20080319871" "20110163969" "9098856" "6529949" "20100114857" "20040051812" "9135626" "7895532" "8968077" "8429516" "20090320073" "9113207" "20110183654" "20110033166" "8972862" "9037674" "20030236907" "20120059910" "20090133090" "20090150941" "20070142024" "20100303450" "20090150937" "20080109852" "20080263600" "20120026278" "8407809" "20120050012" "20070288986" "8140390" "8386304" "7506802" "20050097503" "20090276485" "20120130845" "20140040445" "7657920" "20100328701" "20090094096" "20080027567" "20080003993" "20090142042" "7519703" "20080132254" "7953386" "20100235381" "20070174487" "20080260115" "20100131642" "20110004841" "20110151844" "20090204487" "8806340" "20070005783" "20030021441" "20060282847" "8301648" "20060184609" "8519964" "20070156841" "6934837" "20070286420" "20040088180" "20030095525" "20110041076" "20120198347" "20070117617" "9390441" "20060095471" "20110195790" "20060150120" "7739709" "20100064220" "7984098"	US-PGPUB; USPAT	OR	OFF	2018/12/16 15:00

		"7167703" "20070250912" "8312079" "7857217" "9153125" "20070201502" "20100077441" "7877776" "8041829" "20060041893" "20110202424" "20060129688" "20060047844" "7380260" "20110302052" "7761892" "20090327244" "7849131" "9454341" "8380786" "9292866" "8161172" "20020124249" "20050226166" "20120084662" "8601526" "20070101362" "10102208" "8473558" "8407756" "20100228630" "8644463" "20110072106" "8973072" "9178712" "8943409" "20030115293" "20120192064" "20120158531" "20120158514" "8325920" "9167302" "20110054899" "8051454" "8639733" "20100319017" "20100070876" "20080147883" "8024186" "7056217" "20080098357" "20020077170" "20090043869" "8078230" "6970916" "8750687" "20090164653" "20050021494" "6507727" "7735107" "20040031058" "20060282514" "20100279669" "8244898" "20070061309" "10122569" "20110321107" "8595186" "20080016255" "8510123" "7761090" "20060112336" "8473865" "8812614" "20050216942" "20100198822" "20070180485" "7526573" "20060064350" "20030194211" "20020124247" "20100319026" "20070066289" "20030212613" "7925729" "7941819" "20100138012" "7441019" "7555466" "20090197681" "20070066356" "20100115568" "20130014171" "8336773" "20100222102" "20100129057" "8272019" "7738919" "8016202" "7483958" "20100185448").PN.				
S53	200	("20020049037" "6952835" "8412839" "7930561" "20030033420" "20110099286" "8091110" "20120005287" "8131458" "20070198698" "6910068" "8869226" "8072629" "9363470" "20090144144" "20060227761" "9256888" "20090098857" "20070027857" "9002895" "20080184304" "20060174348" "9693013" "7421656" "20030032409" "6408128" "8306859" "20070208564" "20140033025" "20070063012" "7925973" "20070099694" "8051452" "8856641" "8351907" "20110138327" "9185171" "20080207233" "20020116476" "7793325" "8458369" "20100146051" "20120054615" "7660572" "20120246240" "20080133416" "20100322035" "20110113122" "20060161865" "20120072957" "7707614" "8688709" "8600429" "9131256" "20050039133"	US-PGPUB; USPAT	OR	OFF	2018/12/16 15:00

		"20100105454" "20070038931" "8838686" "20110145726" "20100198982" "20110072078" "20070204308" "20090138484" "9389822" "7353267" "20120246585" "20090187486" "20120054811" "7188342" "20050138192" "20120078954" "8793748" "20050074018" "20090319672" "20090325712" "8880624" "20090157513" "20100185736" "7356765" "20080120196" "7873978" "7724399" "8938217" "20100023885" "20060206563" "20100153207" "7523507" "6671807" "20090005071" "20080250319" "7634780" "20120086857" "20100321201" "20060206340" "7523161" "8978066" "20020097984" "20090104872" "20100206950" "20090325642" "8645838" "9355076" "20090270085" "20030236906" "20080300983" "20070281607" "20120131465" "20100077095" "8255552" "8176521" "20070067253" "7103315" "20050149508" "20100186038" "20080188209" "8130668" "20100077433" "20070106681" "20080172243" "8166511" "7676827" "20100317335" "20040117843" "7375673" "8023929" "20060085352" "20070294622" "20070066355" "20010033736" "20070142022" "8875172" "8062134" "7545784" "20100263004" "9900557" "7921154" "8589580" "20060107215" "20110197264" "20020002707" "20110022661" "8788589" "8209376" "8065710" "20110060587" "20070162502" "8483668" "7890661" "20080313146" "8306507" "20050283810" "20120147268" "20080184306" "7574448" "20070180479" "20090150405" "20110166918" "8522279" "20070018952" "20110276335" "20090235297" "6792323" "20110055256" "20080141132" "20110161377" "8886234" "20040045040" "20090144129" "8769528" "7548948" "8280949" "8423427" "8990214" "8910295" "20100174783" "20100313221" "9215506" "9015270" "20020199001" "20080293387" "8966567" "20070100757" "8687016" "20100049606" "20050166153" "20060282390" "20040243482" "9690866" "20080187112" "20120054808" "8458741" "9037502" "20060140170" "20120252557" "20070199076" "20120005041" "20020146122" "20090277956" "9300919" "8250179").PN.				

S54	100	("7937451" "20110078572" "8689113" "20100125882" "20110238731" "20080139193" "8463890" "20050251576" "20020113820" "20120017250" "20100313169" "20110035741" "20060072721" "7206853" "20090006191" "8666367" "20030149988" "7848777" "20080288460" "8209618" "20080120330" "8990692" "8495235" "20080140702" "8943545" "20070135087" "20030095791" "20130144855" "8730028" "20110191163" "7073189" "8577808" "20100225949" "8484332" "7747280" "20030212804" "20030028892" "20110060688" "7966494" "20090049097" "20120060104" "8806341" "20040024889" "20090013348" "7636300" "20090207984" "20120159327" "8015446" "20050155067" "20090106659" "8156193" "20100082681" "20100075641" "8850477" "8635073" "20090298583" "8141111" "8504946" "20060025117" "20070088727" "20090164309" "20090276547" "8156547" "20040243466" "7558597" "8145637" "20060095502" "6484199" "20070066358" "20110202956" "20120023265" "20120127196" "7938727" "20080256205" "9406043" "20110016492" "7251832" "8789052" "20120042047" "20100131979" "8280772" "20100313213" "8014542" "20040181667" "20080010336" "20110173547" "9788068" "20090254778" "20120124615" "7987492" "8391773" "20140101722" "7558563" "20120258742" "20120042391" "20060282783" "7962948" "20080168052" "8406386" "20090006213").PN.	US-PGPUB; USPAT	OR	OFF	2018/12/16 15:00
S55	2500	S42 S43 S44 S45 S46 S47 S48 S49 S50 S51 S52 S53 S54	US-PGPUB; USPAT	OR	OFF	2018/12/16 15:00
S56	1	("8880491").PN. and format	US-PGPUB; USPAT; USOCR; DERWENT	OR	OFF	2018/12/16 15:01
S57	2	("20170351757").PN.	US-PGPUB; USPAT; USOCR; DERWENT	OR	OFF	2018/12/16 15:03
S58	0	("8880491").PN. and remote with server	US-PGPUB; USPAT; USOCR; DERWENT	OR	OFF	2018/12/16 15:06

S59	0	("8880491").PN. and remote$2 with server	US-PGPUB; USPAT; USOCR; DERWENT	OR	OFF	2018/12/16 15:06
S60	2	("8880491").PN. and remote$2 same server	US-PGPUB; USPAT; USOCR; DERWENT	OR	OFF	2018/12/16 15:06
S61	2	("8880491").PN. and server	US-PGPUB; USPAT; USOCR; DERWENT	OR	OFF	2018/12/16 15:07
S62	2	("8880491").PN. and "server 106"	US-PGPUB; USPAT; USOCR; DERWENT	OR	OFF	2018/12/16 15:08
S63	0	("8880491").PN. and initializ$7 with connection	US-PGPUB; USPAT; USOCR; DERWENT	OR	OFF	2018/12/16 15:10
S64	0	("8880491").PN. and initializ$7	US-PGPUB; USPAT; USOCR; DERWENT	OR	OFF	2018/12/16 15:10
S65	1	("8880491").PN. and connect$3 with server	US-PGPUB; USPAT; USOCR; DERWENT	OR	OFF	2018/12/16 15:10
S66	2	("8880491").PN. and server	US-PGPUB; USPAT; USOCR; DERWENT	OR	OFF	2018/12/16 15:12
S67	1	("8880491").PN. and "160"	US-PGPUB; USPAT; USOCR; DERWENT	OR	OFF	2018/12/16 15:13
S68	2	("20170351757").PN. and initializ$7	US-PGPUB; USPAT; USOCR; DERWENT	OR	OFF	2018/12/16 15:21
S69	2	("8880491").PN. and select$3 with display	US-PGPUB; USPAT; USOCR; DERWENT	OR	OFF	2018/12/16 15:23
S70	2	("20120130971").PN.	US-PGPUB; USPAT; USOCR; DERWENT	OR	OFF	2018/12/16 15:24

S71	3	("9338494").PN.	US-PGPUB; USPAT; USOCR; DERWENT	OR	OFF	2018/12/16 15:25
S72	1	("20120130971").PN. and throw$3	US-PGPUB; USPAT; USOCR; DERWENT	OR	OFF	2018/12/16 15:26
S73	0	("20120130971").PN. and code	US-PGPUB; USPAT; USOCR; DERWENT	OR	OFF	2018/12/16 15:43
S74	0	("20120130971").PN. and QRS	US-PGPUB; USPAT; USOCR; DERWENT	OR	OFF	2018/12/16 15:43
S75	0	("20120130971").PN. and camera	US-PGPUB; USPAT; USOCR; DERWENT	OR	OFF	2018/12/16 15:43
S76	0	("20120130971").PN. and identifier	US-PGPUB; USPAT; USOCR; DERWENT	OR	OFF	2018/12/16 15:43
S77	2	("20170351757").PN. and format$1	US-PGPUB; USPAT; USOCR; DERWENT	OR	OFF	2018/12/17 07:03
S78	2	("20170351757").PN. and "remote server device"	US-PGPUB; USPAT; USOCR; DERWENT	OR	OFF	2018/12/17 07:10
S79	2	("20170351757").PN. and remote with server with device	US-PGPUB; USPAT; USOCR; DERWENT	OR	OFF	2018/12/17 07:11
S80	2	("20170351757").PN. and server with device	US-PGPUB; USPAT; USOCR; DERWENT	OR	OFF	2018/12/17 07:12
S81	2	("20170351757").PN. and initializ$7	US-PGPUB; USPAT; USOCR; DERWENT	OR	OFF	2018/12/17 07:13
S82	2	("20170351757").PN. and remote	US-PGPUB; USPAT; USOCR; DERWENT	OR	OFF	2018/12/17 07:19

S83	0	("2012/0130971 ").PN.	US-PGPUB; USPAT; USOCR; DERWENT	OR	OFF	2018/12/18 15:31
S84	2	("20120130971 ").PN.	US-PGPUB; USPAT; USOCR; DERWENT	OR	OFF	2018/12/18 15:32
S85	8	((("TOUCHSTREAM") near3 ("TECHNOLOGIES") near3 ("INC"))).AS,AANM.	US-PGPUB; USPAT	OR	OFF	2018/12/18 15:34
S86	1	S85 and "remote server device "	US-PGPUB; USPAT	OR	OFF	2018/12/18 15:34
S87	0	S85 and "106" with format	US-PGPUB; USPAT	OR	OFF	2018/12/18 15:57
S88	0	S85 and "106" same format	US-PGPUB; USPAT	OR	OFF	2018/12/18 15:57
S89	5	S85 and server same format	US-PGPUB; USPAT	OR	OFF	2018/12/18 15:57
S90	1	S84 and server same format	US-PGPUB; USPAT	OR	OFF	2018/12/18 15:58
S91	2	("20170351757").PN. and receiv$3 with server withmessage	US-PGPUB; USPAT; USOCR; DERWENT	OR	OFF	2018/12/19 07:27
S92	2	("20170351757").PN. and receiv$3 with server with message	US-PGPUB; USPAT; USOCR; DERWENT	OR	OFF	2018/12/19 07:27
S93	2	("20170351757").PN. and receiv$3 with server with message with format	US-PGPUB; USPAT; USOCR; DERWENT	OR	OFF	2018/12/19 07:36
S94	2	("20170351757").PN. and receiv$3 with server same message with format	US-PGPUB; USPAT; USOCR; DERWENT	OR	OFF	2018/12/19 07:37
S95	2	("20170351757").PN. and receiv$3	US-PGPUB; USPAT; USOCR; DERWENT	OR	OFF	2018/12/19 07:46
S96	2	("20170351757").PN. and receiv$3 with command	US-PGPUB; USPAT; USOCR; DERWENT	OR	OFF	2018/12/19 07:52
S97	2	("20120130971 ").PN.	US-	OR	OFF	2018/12/19

			PGPUB; USPAT; USOCR; DERWENT			07:53
S98	1	("20120130971 ").PN. and receiv$3 with command	US-PGPUB; USPAT; USOCR; DERWENT	OR	OFF	2018/12/19 07:54
S99	2	("20120130971 ").PN. and command	US-PGPUB; USPAT; USOCR; DERWENT	OR	OFF	2018/12/19 07:56
S100	200	("8880491" "20120130971" "9338494" "20120210371" "8621507" "20120210350" "9924229" "9258613" "9628842" "20120210344" "20120117586" "20120112986" "9426510" "20120210378" "9264758" "8510769" "20120210365" "8949376" "9521453" "9648380" "8789086" "10097880" "8704854" "20120210343" "8984626" "20110066942" "20110064378" "20100180010" "20110063317" "20110064385" "20110064377" "20080189295" "20110067099" "20120117588" "20110066944" "20110066663" "20110067066" "9253222" "20110066489" "8660545" "20100235443" "10091345" "20120210226" "7917932" "20060008256" "20080209021" "20090156181" "20080155470" "20060253874" "8965920" "20090061841" "20110064386" "8265612" "8417096" "8661494" "8868785" "20080155057" "20080212945" "8175638" "20080212944" "20120011558" "20060265427" "20110137976" "20120210225" "20080176540" "20080273077" "20100153410" "20060224761" "20100281108" "9633656" "8904455" "20110088057" "20110135283" "8473976" "20110170842" "20130272681" "8682145" "20040133657" "20110145581" "20110131180" "20120117590" "20060259930" "20080160909" "20060173974" "20070157072" "20120210238" "8897737" "20080059533" "8271341" "8108342" "8359612" "20080214215" "9092519" "20110289108" "20080209075" "20080175569" "20080201751" "20020140855" "20020040475" "20080133736" "20090156179" "20100325238" "20080180401" "7102688" "8468130" "20060062544" "20080187115" "8160495" "20130022185"	US-PGPUB; USPAT	OR	OFF	2018/12/19 07:59

		"20090069915" "20120323349" "20080305738" "20130024539" "20100325239" "20040133914" "20090106200" "7966638" "20060248557" "20130022335" "20080175566" "20080160908" "20080184317" "20080184359" "20090304344" "20080182510" "20080182508" "9055269" "20060291506" "20110197237" "20080183840" "20080182509" "20060184431" "8700739" "20060253782" "20080201375" "20080162655" "20080163302" "20090113315" "9009589" "8832564" "20040086120" "20130097302" "20080010372" "20100064332" "20110004517" "7881656" "20080155129" "20080201376" "8813127" "8099455" "9490998" "7711605" "20080244681" "20040244031" "20080177860" "8555318" "20090058822" "8606948" "20090304346" "20080178238" "6587127" "20120005311" "9275054" "20110119637" "8090768" "8886759" "20080276279" "20080155634" "20100235762" "20080160910" "20100287070" "8112032" "20060059095" "20090049156" "20090030978" "20080141307" "8818179" "8556722" "20100042749" "20120210245" "8107977" "8271889" "20110009051" "20070136778" "20050076092" "20100042499" "20080155109" "8290929" "20040165006" "20070294096" "20060026162" "20070265073" "20090011780" "20100281042" "7650361" "20070288836" "8634703" "20120079126" "9009758" "9563702").PN.				
S101	200	("8046672" "20090112839" "7451177" "20110231867" "9178923" "8281001" "20120254929" "20100049835" "20090158136" "8751672" "20080256129" "20110158610" "8521857" "20080189752" "20100107201" "20120131098" "20040044725" "20090069038" "20110185378" "8695030" "20100146411" "20120210352" "20050177853" "20090177736" "20070299976" "20110060994" "20030110503" "8407755" "20040133908" "9065683" "8327403" "7956848" "20070204011" "8176121" "7076495" "20110150432" "20120210377" "20060206581" "20120059884" "20020156909" "8350971" "20020140571" "8204485" "20100161729" "7376414" "8402498" "8230341" "20020129089" "20080281689" RE44298 "20050208930"	US-PGPUB; USPAT	OR	OFF	2018/12/19 07:59

"9113195" "8407303" "7899808"
"6476825" "20080229335" "8246454"
"20040224723" "9769414"
"20080098433" "9100726" "8930561"
"8001471" "20100273553"
"20020161794" "20100131848"
"9405710" "20090019061"
"20020169540" "8244315"
"20090286560" "8315608"
"20100333032" "20020087887"
"20110087348" "8677402" "8707361"
"9794647" "20060041926"
"20100085857" "8301784" "7975062"
"7224260" "8886710" "20080028023"
"20120036543" "20120124625"
"20060276230" "20090280792"
"20070199014" "7870272" "7840631"
"20100016080" "8769578" "7574723"
"20090125609" "20100131978"
"20070204057" "9137576"
"20100333135" "20090112874"
"20100333151" "20050208929"
"8793305" "7426532" "20020151327"
"20100318357" "8316052" "8094794"
"8775647" "8266173" "20120117587"
"20050080496" "20120079095"
"6882299" "20080133529"
"20120131609" "20080148328"
"7890957" "20110289460"
"20100333136" "20080066080"
"9003500" "7607582" "20100293598"
"20090100065" "20040226048"
"20100042747" "20110099157"
"20120030701" "20070198744"
"20080216153" "6938101"
"20100070925" "20100306402"
"20090113301" "20090047000"
"20090254950" "8918645"
"20030135859" "20050088333"
"8467275" "20050216606"
"20090156170" "20120078997"
"20020162112" "20090156183"
"20110320476" "20020143805"
"9201627" "7784065" "20020161780"
"8457661" "20140032636"
"20120079276" "20090259711"
"20070264982" "8090694"
"20070006255" "8359351"
"20100306815" "7506019"
"20050091359" "20100057583"
"7689510" "20100299761" "9271022"
"6104334" "7475155" "20060136572"
"8185477" "8676034" "20080140664"
"7775886" "7962097" "8214422"
"20050198353" "20060242259"
"20070174624" "6769028" "8001236"
"20100235891" "7716224"
"20080243828" "20080243788"
"20030233349" "7376696"
"20070250194" "8077263" "9201668"
"7702279" "8713605" "8954444"
"20080124055" "20070250597"
"20050210101" "7653691"
"20120210366" "20060075429"

		"8464302").PN.				
S102	200	("20100169347" "8943169" "20060161635" "7143214" "8583758" "20070198633" "20080098426" "20120206317" "8792429" "8874244" "20060176271" "8150934" "20120263440" "9066199" "20080195698" "8381310" "20070204003" "8249559" "20060136577" "20030014630" "20110167447" "20120052941" "20110239142" "8126200" "20100205628" "8234282" "7565294" "20060253525" "20030132953" "20070168543" "20100185306" "9219734" "8291028" "20080114861" "8180645" "20120221645" "8887221" "20110163939" "7046161" "9525838" "8656424" "8875180" "20130166423" "20110247035" "20100169977" "8171520" "8977710" "20090249222" "20110321071" "20120075529" "20060004834" "8150911" "8374923" "20120079606" "20110087603" "8990215" "20110107225" "20040044723" "7873578" "8316389" "8209396" "20090089838" "20120039467" "20110069936" "9479737" "20090234939" "9716774" "8812850" "20070016865" "9391808" "20090182806" "20090182805" "20090281874" "20070124769" "20100017821" "9374605" "20080134237" "20120023408" "7779097" "20080290987" "20070169115" "8860804" "6182094" "6591247" "6834294" "20090177303" "20070250195" "20130047083" "20080109298" "20090319599" "20120222061" "20120124475" "20110225066" "7725102" "20100169939" "20030141987" "20090234955" "8510847" "9067150" "20050177745" "8677392" "20110029604" "20080097632" "7996869" "9167208" "20060184968" "20060094360" "8079055" "20070121651" "20090024943" "20070005727" "8768307" "20080294674" "8826312" "20080229352" "8494907" "20100169942" "7734724" "8073380" "8122464" "20060085825" "8798445" "7054863" "8667163" "7895633" "8112504" "7519681" "20050177624" "6925495" "20080021775" "20080307477" "20080243694" "20120151525" "8577420" "20080276266" "20060174026" "8667546" "20110211813" "8503861" "8621338" "20090172758" "20060048201" "20080107102" "9356982" "9078043" "20100144329" "8036418" "20060259589"	US-PGPUB; USPAT	OR	OFF	2018/12/19 07:59

		"20030043191" "20030182139" "20110055218" "20090198357" "8352576" "20110265111" "8806537" "9786159" "20060159109" "8588590" "7536708" "20090198358" "7433922" "20100208069" "20070277201" "20050058260" "20090052863" "20090043692" "20100031306" "20020087661" "20120072270" "8561114" "20050204309" "20070005450" "8490127" "8943122" "20090248182" "20090157792" "20090029685" "20080320508" "20030005429" "20080077483" "8352616" "7512882" "20040044724" "5732216" "9832532" "7519911" "20120042309" "20080256485" "6199076" "20090100477" "9883233" "20090064038" "20070288970" "20080205205" "20070073725" "20100235328" "20100036908" "8401681" "10080063" "20090172747").PN.				
S103	200	("8015263" "20120079080" "8978147" "20100071076" "20120124171" "8015491" "20110035668" "20060271977" "20060129458" "20100008586" "20020078144" "20100299701" "20060248570" "20100138761" "7721301" "9628746" "20030151618" "20110135271" "20050286497" "20080155616" "20070067309" "8213924" "20030018971" "20100274858" "20020069113" "9700791" "20110138429" "20080195466" "7454515" "20100031366" "20100175093" "8081994" "7920901" "20100106852" "20020161775" "20090172726" "8296808" "20080005130" "20060041639" "20110119600" "20070183741" "8700005" "20050251749" "8543095" "6968364" "20060235700" "20080195692" "20100064055" "20100041457" "8438589" "7917439" "8155582" "8671434" "20060068919" "20090077584" "7979881" "20110153048" "20110131604" "20080141150" "20060123053" "20120023521" "9152300" "20090070438" "20110151905" "20090186700" "20050149872" "20110191677" "20090099858" "9712582" "6829368" "20070124737" "20100082567" "8601089" "20110317634" "7069310" "20110214147" "8204793" "8656040" "7809802" "8452775" "8103957" "20090177742" "20110289073" "9626363" "20070028111" "20110185312" "20050080878" "8135865" "20040215741" "20080222546" "8469813"	US-PGPUB; USPAT	OR	OFF	2018/12/19 07:59

		"20100082136" "20040148362" "8611919" "20120054793" "20110320963" "8429707" "20030140090" "8271549" "8438287" "20070204115" "8458749" "9864958" "20060259588" "6956833" "20100138298" "20060041640" "8990104" "8832754" "20120023520" "9124650" "20120173383" "20100191608" "20060015649" "20070055743" "9369776" "20100299417" "9204193" "9055315" "8799758" "20020007418" "20040171376" "20070073726" "9509796" "7814148" "8931010" "8122004" "8437744" "20090117890" "20110283311" "20050267994" "7797242" "20090094511" "20080293450" "20070189708" "20050273827" "8739294" "8072956" "20040177376" "9706160" "6603488" "20090220216" "10057631" "20050108769" "9116340" "8156176" "8738639" "8149701" "7509178" "20080155062" "8539093" "20060265329" "20080117922" "20080140523" "9414101" "9521174" "20070209005" "20080244637" "8069232" "8694531" "20100278321" "8682262" "20110093892" "20100037264" "20080046919" "8417258" "7848959" "8051453" "20100251136" "20090228125" "20070016922" "20110184862" "7080030" "8689142" "7917645" "20120036549" "20100222090" "20050278435" "8965807" "20100150395" "20090099912" "9483755" "9519940" "20110137729" "20070073728" "20070048714" "7921309" "20040172481" "8526928" "20070245882" "9258326" "20120019400" "20050136949" "20080155663" "20100100636" "20080098432" "20120011553" "20100296654" "7155436" "6055560").PN.				
S104	200	("7593576" "20050265701" "6288716" "20110119149" "20080082381" "20090204639" "8380878" "8341513" "7627341" "20110164175" "20090043657" "7516213" "8606314" "20070073727" "20100138746" "8826145" "9135363" "8086226" "8495686" "8621541" "8589991" "20110138331" "8046802" "20100145809" "7818321" "20110035462" "20030229899" "9078082" "7873742" "7724716" "20110138415" "8631436" "20090017827" "20060208074" "20080189766" "20060179129" "20080215452" "20120096092" "8117062" "20050198574"	US-PGPUB; USPAT	OR	OFF	2018/12/19 07:59

"20050021478" "20110137728"
"20110131600" "20110082761"
"9824389" "20060159366" "7725360"
"8856118" "20090052870"
"20100011299" "7707601"
"20060127037" "7487112"
"20070100904" "20110219421"
"7769819" "20120036584" "9171851"
"20020091848" "20070239546"
"20050091268" "20090102983"
"20050210120" "20050108519"
"20070250400" "20110218044"
"8707366" "20100169464" "7792920"
"20100313250" "7917933"
"20100118200" "20050182828"
"7689613" "8230466" "20070173266"
"20070016653" "20030023505"
"20050267883" "8291320" "8433611"
"5721827" "20020124100" "6198479"
"20090006644" "20120162537"
"20070294292" "9933937"
"20110179453" "20090318192"
"9032296" "8868640" "7693992"
"8909695" "7480703" "20080094400"
"20080244010" "8375208" "7949722"
"20090210493" "20080250431"
"20080221909" "20090249418"
"20090099859" "8095424"
"20060182424" "6735628"
"20050193094" "20070118426"
"8341210" "20110131518"
"20080071834" "8660530"
"20050055730" "20060193606"
"8656446" "20110181780"
"20090172108" "7178106"
"20100198704" "7673315"
"20110170837" "20090144624"
"7472175" "20070155306"
"20050055717" "20110185036"
"9886599" "7337147" "8667152"
"20060031551" "20110214045"
"8060625" "20100257458"
"20100138297" "20070162939"
"20050278729" "20050193322"
"20110289317" "8621025"
"20090043870" "20080215507"
"20050033855" "20080065974"
"20070291710" "20090099836"
"7426329" "8086575" "20010038392"
"20070061845" "8244179"
"20070061835" "20080200161"
"20110126236" "20090063645"
"20070174774" "20030122966"
"8106742" "7487441" "20080147772"
"20060085351" "7500007"
"20050060756" "20040177375"
"8621509" "20110026692"
"20120079119" "20020069308"
"8220708" "8977294" "8825468"
"20070067315" "7920856"
"20100087179" "20090006375"
"20110269424" "8190692" "7988042"
"20020169797" "20110197159"
"20040025185" "9128961"

		"20050086696" "8176431" "20100241475" "20080027827" "20030065805" "20100070565" "20080320391" "8375131" "20020147699" "7578002" "20110113354" "20070050734" "8291459" "20090228807" "20110087971" "20080254832" "20120078952" "20080317441").PN.				
S105	200	("20110225417" "7966552" "20020107802" "8176506" "20110013885" "8935300" "20110289414" "9047516" "7756545" "7735012" "20170149600" "6944632" "7194235" "8463869" "20040103297" "20040068536" "8769297" "9635066" "20100299712" "8584171" "9681105" "7693902" "20110040894" "7574691" "20110181496" "20110078174" "20100161818" "20050039135" "7130616" "8498628" "7925299" "20090327449" "7356575" "20100279673" "8161411" "9015179" "20090018898" "20090049074" "7793823" "9277156" "20090228578" "20060064720" "9602512" "8424041" "8650283" "20100234052" "20110125765" "20170228789" "9087182" "8108797" "20040128514" "20010031066" "20100235476" "20110265119" "8572257" "20100255890" "7812854" "9037999" "20060149813" "20050165849" "7720686" "8451232" "9178946" "20090228544" "7644172" "6792452" "8565740" "20060068911" "20070005504" "20130014169" "8041775" "20060156353" "20080234000" "8555395" "7519073" "9326016" "20080097984" "7721103" "20120130834" "20110153849" "20070124772" "7525975" "8682750" "7571458" "8607287" "20080034081" "20090005080" "20080177713" "9201882" "7734684" "20060080702" "8589779" "20080141303" "7308487" "20110287757" "20060265477" "8265862" "6704864" "20110016488" "20070055997" "20090204885" "20080133551" "20100134299" "7908467" "20090125935" "20050266884" "8554938" "9077859" "8898708" "7886318" "8166139" "20060080408" "20070271366" "8843589" "20060242275" "20090070673" "20060259436" "20100297964" "20110197236" "8310985" "8990119" "7593982" "7535465" "6609105" "20090094512" "20090054092" "20070124779" "6892230" "20020068558" "20070124201" "20050010963" "20100211636" "20030220835" "20120110126" "20100043046"	US-PGPUB; USPAT	OR	OFF	2018/12/19 07:59

		"8078751" "8943539" "20040068756" "20100332994" "20110016503" "20090156251" "9826046" "20090164641" "8190754" "20040088731" "8862762" "7558838" "8875213" "20100199219" "9277292" "20080004952" "8516125" "20060085349" "20110311095" "8060631" "7218243" "8621531" "8341527" "7849160" "20100094726" "20070048713" "8544046" "8615164" "7797431" "7881658" "9118934" "20080242280" "20080281805" "20120081299" "9167301" "8245142" "20080155006" "20080281943" "20080028223" "8205081" "20100138884" "20080092045" "7237104" "20110040658" "9178954" "20080148310" "20090150553" "8898715" "20060259429" "20120131626" "20110282721" "8214338" "20090063660" "7856225" "20040033821" "9516357" "20120042385" "8954597" "7308644" "8023935" "20110040615" "20070288985" "20100145861" "8635196" "20040205811").PN.				
S106	200	("20090094341" "20110106910" "20050172309" "20100058220" "7937450" "7865366" "7840977" "20080275864" "20120062471" "6856990" "20120054616" "20040268451" "20060253417" "20090144801" "20040254887" "20080271066" "20100011135" "20060085835" "9100702" "20090177966" "7751807" "8607263" "8336077" "8392959" "9524072" "6243707" "9083791" "9990439" "20030140121" "20030221127" "8151259" "9584563" "20120084653" "7787749" "20070157234" "20040019497" "20050091311" "7739596" "20110145721" "20120226912" "20080033918" "20120253937" "7761898" "7945616" "8776122" "20070043766" "20080209329" "7996496" "7925300" "20060222322" "20040175097" "7647430" "7860531" "8561202" "20100228880" "7383229" "20030103088" "20070079352" "20020033844" "20080181575" "7269634" "20050044189" "20110179139" "20120005702" "20030189509" "9582507" "8413056" "8713304" "20070157240" "9021522" "6725281" "20040248561" "9351048" "7269854" "7602756" "8407609" "20050060527" "8893203" "8063923" "20070207795" "8458740" "20080165143" "20030145338" "9269086" "20090271831" "7379661" "20040174905" "20090100182"	US-PGPUB; USPAT	OR	OFF	2018/12/19 07:59

		"6884172" "20100081472" "7894703" "20080194276" "8005345" "20050210391" "20100169410" "7149208" "20110021219" "8707347" "9219729" "20060117344" "20100279735" "7953872" "8910218" "20090171715" "8219911" "20050114468" "9639619" "20090019492" "7694235" "8112815" "20100186034" "20120066338" "9253205" "8025572" "20020035621" "20080016196" "20070124416" "8315950" "7039858" "7219308" "20070260604" "20050166232" "20080307339" "8918461" "20090276633" "20080052742" "7310770" "8621533" "20030188320" "7831899" "20070174147" "20040174858" "20120011449" "20070150286" "9342662" "20070157241" "8914394" "8499088" "20110179184" "20090307731" "8386465" "9100549" "8332478" "7953387" "20080301189" "8317618" "8185475" "20030060157" "7103834" "7089307" "20090138922" "20120151509" "8122248" "8949860" "20060075426" "20040175098" "20110066843" "6965770" "7426637" "20100050096" "20090276439" "7231592" "7584353" "20090298490" "8732234" "20060253330" "6192340" "20040174863" "8112810" "20060190413" "20100211466" "20060282864" "20140289747" "20120092444" "20110162009" "6725260" "20080183584" "20090280784" "20070178889" "20040148638" "20060181982" "8219720" "20070101361" "7603437" "20090319695" "20080162623" "20040175096" "20070038717" "20070196802" "20060012813" "7133837" "20070066348" "20120147825" "20060047774" "20070288967" "8775938" "20090049297" "20060282319" "20090133070" "7500177").PN.				
S107	200	("7130895" "8843590" "20080249986" "8578502" "20020112002" "20080222520" "20090303186" "20070250695" "20050120305" "7339493" "7558846" "20080320543" "7308645" "20100057882" "9769544" "20080229204" "8267790" "20020165024" "20090257729" "7624416" "7831605" "20090215477" "20070078949" "20080221948" "20120077586" "20070066291" "8432489" "20090049052" "20090307719" "20100174776" "20100082743" "20070157260" "20060053375" "20100333143" "7747782" "8539533" "10108730"	US-PGPUB; USPAT	OR	OFF	2018/12/19 07:59

"20090265789" "20060181963"
"8577399" "8266223" "20100146544"
"8103307" "8577338" "20060277308"
"20090298485" "7761602" "8089503"
"8849659" "9826273" "8346605"
"20040183756" "20090307658"
"20060172700" "20050076383"
"9955205" "20120047156" "7640327"
"20120078937" "20040225564"
"6760916" "20110072456" "8826445"
"20030237043" "20110179441"
"20110185392" "9367489"
"20100184422" "9401080" "8856844"
"20040253945" "20130018878"
"20070048712" "8156206" "8577971"
"7376581" "7934170" "8443382"
"9047375" "9756170" "7739584"
"8438596" "7299304" "7533061"
"20080250238" "7995992"
"20120133731" "20070250716"
"7818350" "7817989" "20090265793"
"20030067908" "20110320626"
"9253272" "8584184" "8667521"
"20090006570" "20100138487"
"20110064387" "20030048295"
"20120166655" "20120266066"
"20060195366" "20040133848"
"20060195521" "7853893" "8429687"
"6195693" "7711795" "20050120301"
"20030050058" "20100257569"
"20030061607" "7587372"
"20070086445" "20050022110"
"7254825" "20060190616" "8121843"
"6708203" "20020100052"
"20110061071" "8462645" "8271575"
"20070245019" "9417758" "7937108"
"20070016671" "8881210"
"20110306368" "10027998"
"20090234923" "20050060755"
"20070220024" "9292368"
"20070294726" "7973978" "8667299"
"7421482" "20110185048"
"20110236872" "20110067059"
"20080256563" "8666528"
"20030012403" "20100134275"
"7624417" "20090265549" "8307390"
"20090144204" "8814692"
"20110164264" "7996775"
"20020046407" "20110099277"
"7487230" "8201109" "20040220791"
"20090217365" "7407092" "6636892"
"20050060542" "7895076" "8244595"
"20110040731" "8255968"
"20090265557" "8813166"
"20030120748" "20080118227"
"7956272" "20080282083"
"20090061824" "10091535"
"20020112237" "9367530"
"20060291434" "7787818"
"20050091302" "8996420"
"20060075427" "8467724" "8970668"
"20080242221" "9959897" "8090659"
"20020049978" "20110004943"
"8704863" "8387096" "20100241491"

		"20080152097" "20070022178" "20100064227" "9384299" "20110078721" "6834308" "20080065486" "20090013059" "7412538").PN.				
S108	200	("20060136980" "8359382" "20080318529" "20020178360" "20100134815" "7904069" "20100299687" "20060161662" "20110289199" "20060129938" "20070117635" "20100299697" "20070169087" "20110173054" "7499765" "6546419" "8614625" "9338276" "20010011284" "20060015201" "6170060" "8391155" "8087091" "8055588" "20100046030" "8678928" "20110271194" "20120066715" "8244589" "8521832" "7168051" "20070063039" "20050235338" "20090100062" "20080052252" "6791588" "20040249851" "9143341" "7469829" "8087047" "20030140107" "20100273525" "20120023126" "8645303" "20020004855" "20050078944" "20100174655" "20110277006" "8107921" "7406508" "20050010866" "20080194175" "20040236945" "20070300261" "20050022210" "20080219638" "20110166860" "20120036585" "20080288600" "9747622" "20070282959" "20080307462" "7308483" "20080235733" "20050132405" "20120042006" "9191610" "7107045" "20060258289" "20040024580" "20100299709" "9172915" "20060136964" "20020053078" "20010030667" "7379901" "9137577" "20170085919" "8676711" "20060021057" "20060168126" "20110185393" "8984562" "20080250239" "7570761" "7920855" "20080288461" "20100332218" "7765280" "20070107032" "8589795" "20100057469" "20090228792" "7412666" "8359031" "7895622" "20070066343" "9451326" "8804039" "7566274" "20080109528" "8332892" "8856833" "20040177371" "6496802" "20120185886" "20060282774" "7567671" "9378516" "20080109839" "20060085821" "20070061759" "20040103184" "7466823" "20100095337" "20070061364" "20050071780" "20100223314" "20110131607" "20080081699" "20100154021" "7505605" "20060294558" "20060120560" "8806530" "7983994" "8886545" "20100137036" "7555543" "20070198532" "20110228763" "20120266084" "8316399"	US-PGPUB; USPAT	OR	OFF	2018/12/19 07:59

		"20060190410" "7159174" "6249914" "20020062252" "20030101294" "8321401" "20100223393" "7120871" "20040260800" "20120192055" "20050091111" "20100186057" "20100312833" "20090013265" "9003473" "20040100492" "7987491" "20050022127" "8990702" "20030229900" "9377924" "20090088206" "20010039659" "8090403" "9076155" "20080180391" "20080214236" "20120078885" "8909740" "20110193780" "20070185840" "20110296472" "20110277002" "7555528" "20120254453" "20050246624" "8141117" "7653446" "9407686" "20110161996" "9443377" "8417720" "7444438" "5957695" "20020092021" "20120078953" "20070073596" "20110113450" "20050229213" "8909296" "7831930" "7996228" "20070063032" "7921446" "7171018" "20070195987" "20090152342" "20020002541" "7711564" "8443288" "8622839" "20080278772" "20090133078" "8073590" "20080065507" "20110282965" "20020082922").PN.				
S109	200	("20110131297" "20070055935" "8736561" "20050021470" "8914402" "20050055716" "20080307463" "8606848" "20100306154" "20090144168" "20020194601" "20110072107" "20100198860" "20030009694" "8949266" "20020013852" "20130031594" "6259449" "20110055026" "20100134843" "20050057538" "7392285" "20070003224" "20070033531" "7624411" "7738918" "8661464" "20050058319" "7637424" "20040044569" "20050240665" "20040174896" "20060195600" "20070073845" "20080065567" "8732232" "20080320396" "7899915" "20090181641" "20040220926" "8813112" "20110277003" "20100280641" "8433306" "20090133069" "7984097" "8391774" "8401366" "7716371" "9911126" "20090251409" "20100046744" "8918812" "9788043" "7480746" "7877103" "9286388" "20060280303" "20070199030" "20070124781" "9961399" "7415430" "20090006192" "7814022" "20110213681" "8219493" "20090258633" "8683510" "8559933" "20090046321" "20080080836" "9807224" "20030041110" "8055688" "7392481" "7632186" "20130018995" "7818423" "20070113264" "8117644" "20080288890" "20030060240" "20050108659" "20060218294"	US-PGPUB; USPAT	OR	OFF	2018/12/19 07:59

		"7676436" "20060031549" "8140649" "20120131570" "8442423" "7523225" "8527640" "20060282512" "20070239611" "7464194" "20090249400" "20070043616" "20060242590" "7386480" "7873708" "20040025190" "20130014190" "7949730" "7716385" "7716273" "7024256" "20090037382" "8196044" "20050004981" "8307286" "6487663" "20110249079" "7673314" "20040070600" "20070127887" "20030014436" "20060282389" "20090141875" "7647614" "20090282111" "8402506" "20070019069" "7870197" "20090217084" "20100119208" "20070022438" "20080222687" "9733804" "20070155311" "9392101" "8620994" "8528032" "20060123339" "8738537" "20080167968" "9003309" "20040268400" "8332530" "20110077046" "8868678" "20040163073" "8700534" "9088826" "8042140" "7870585" "8126313" "8261300" "20070066279" "8793332" "8122466" "8537982" "20110185296" "9621855" "20100241699" "8583602" "8803940" "20100169463" "9318152" "8745228" "20070165144" "20110041154" "20040199615" "20070022447" "20100100915" "20050169467" "8583915" "20110145768" "9893908" "8467773" "20080133759" "9288548" "20070063037" "8261315" "20100325660" "20070050402" "20060095472" "7802285" "20120266077" "20090144130" "8103371" "20120108293" "8060407" "20040098754" "8107929" "9083600" "8959085" "20090183242" "20090031358" "20100251284" "7437434" "20050267935" "7904344" "20050041150" "7590696" "20110083073" "20080307456" "8001187" "20090150406" "20070157194" "20040012613" "20090247221").PN.				
S110	200	("20060023257" "9124441" "20080189391" "7991493" "20100071013" "20120233036" "8266662" "6907225" "9665629" "20090093897" "8966101" "20090215478" "7493283" "20060282513" "20050245241" "20080201201" "8060909" "7472353" "20100095332" "8239889" "8527422" "20100064307" "20080004978" "8028323" "20090228897" "20080319871" "20110163969" "9098856" "6529949" "20100114857" "20040051812" "9135626" "7895532" "8968077" "8429516" "20090320073"	US-PGPUB; USPAT	OR	OFF	2018/12/19 07:59

"9113207" "20110183654"
"20110033166" "8972862" "9037674"
"20030236907" "20120059910"
"20090133090" "20090150941"
"20070142024" "20100303450"
"20090150937" "20080109852"
"20080263600" "20120026278"
"8407809" "20120050012"
"20070288986" "8140390" "8386304"
"7506802" "20050097503"
"20090276485" "20120130845"
"20140040445" "7657920"
"20100328701" "20090094096"
"20080027567" "20080003993"
"20090142042" "7519703"
"20080132254" "7953386"
"20100235381" "20070174487"
"20080260115" "20100131642"
"20110004841" "20110151844"
"20090204487" "8806340"
"20070005783" "20030021441"
"20060282847" "8301648"
"20060184609" "8519964"
"20070156841" "6934837"
"20070286420" "20040088180"
"20030095525" "20110041076"
"20120198347" "20070117617"
"9390441" "20060095471"
"20110195790" "20060150120"
"7739709" "20100064220" "7984098"
"7167703" "20070250912" "8312079"
"7857217" "9153125" "20070201502"
"20100077441" "7877776" "8041829"
"20060041893" "20110202424"
"20060129688" "20060047844"
"7380260" "20110302052" "7761892"
"20090327244" "7849131" "9454341"
"8380786" "9292866" "8161172"
"20020124249" "20050226166"
"20120084662" "8601526"
"20070101362" "10102208" "8473558"
"8407756" "20100228630" "8644463"
"20110072106" "8973072" "9178712"
"8943409" "20030115293"
"20120192064" "20120158531"
"20120158514" "8325920" "9167302"
"20110054899" "8051454" "8639733"
"20100319017" "20100070876"
"20080147883" "8024186" "7056217"
"20080098357" "20020077170"
"20090043869" "8078230" "6970916"
"8750687" "20090164653"
"20050021494" "6507727" "7735107"
"20040031058" "20060282514"
"20100279669" "8244898"
"20070061309" "10122569"
"20110321107" "8595186"
"20080016255" "8510123" "7761090"
"20060112336" "8473865" "8812614"
"20050216942" "20100198822"
"20070180485" "7526573"
"20060064350" "20030194211"
"20020124247" "20100319026"
"20070066289" "20030212613"

		"7925729" "7941819" "20100138012" "7441019" "7555466" "20090197681" "20070066356" "20100115568" "20130014171" "8336773" "20100222102" "20100129057" "8272019" "7738919" "8016202" "7483958" "20100185448").PN.				
S111	200	("20020049037" "6952835" "8412839" "7930561" "20030033420" "20110099286" "8091110" "20120005287" "8131458" "20070198698" "6910068" "8869226" "8072629" "9363470" "20090144144" "20060227761" "9256888" "20090098857" "20070027857" "9002895" "20080184304" "20060174348" "9693013" "7421656" "20030032409" "6408128" "8306859" "20070208564" "20140033025" "20070063012" "7925973" "20070099694" "8051452" "8856641" "8351907" "20110138327" "9185171" "20080207233" "20020116476" "7793325" "8458369" "20100146051" "20120054615" "7660572" "20120246240" "20080133416" "20100322035" "20110113122" "20060161865" "20120072957" "7707614" "8688709" "8600429" "9131256" "20050039133" "20100105454" "20070038931" "8838686" "20110145726" "20100198982" "20110072078" "20070204308" "20090138484" "9389822" "7353267" "20120246585" "20090187486" "20120054811" "7188342" "20050138192" "20120078954" "8793748" "20050074018" "20090319672" "20090325712" "8880624" "20090157513" "20100185736" "7356765" "20080120196" "7873978" "7724399" "8938217" "20100023885" "20060206563" "20100153207" "7523507" "6671807" "20090005071" "20080250319" "7634780" "20120086857" "20100321201" "20060206340" "7523161" "8978066" "20020097984" "20090104872" "20100206950" "20090325642" "8645838" "9355076" "20090270085" "20030236906" "20080300983" "20070281607" "20120131465" "20100077095" "8255552" "8176521" "20070067253" "7103315" "20050149508" "20100186038" "20080188209" "8130668" "20100077433" "20070106681" "20080172243" "8166511" "7676827" "20100317335" "20040117843" "7375673" "8023929" "20060085352" "20070294622" "20070066355" "20010033736" "20070142022" "8875172" "8062134" "7545784"	US-PGPUB; USPAT	OR	OFF	2018/12/19 07:59

		"20100263004" "9900557" "7921154" "8589580" "20060107215" "20110197264" "20020002707" "20110022661" "8788589" "8209376" "8065710" "20110060587" "20070162502" "8483668" "7890661" "20080313146" "8306507" "20050283810" "20120147268" "20080184306" "7574448" "20070180479" "20090150405" "20110166918" "8522279" "20070018952" "20110276335" "20090235297" "6792323" "20110055256" "20080141132" "20110161377" "8886234" "20040045040" "20090144129" "8769528" "7548948" "8280949" "8423427" "8990214" "8910295" "20100174783" "20100313221" "9215506" "9015270" "20020199001" "20080293387" "8966567" "20070100757" "8687016" "20100049606" "20050166153" "20060282390" "20040243482" "9690866" "20080187112" "20120054808" "8458741" "9037502" "20060140170" "20120252557" "20070199076" "20120005041" "20020146122" "20090277956" "9300919" "8250179").PN.				
S112	100	("7937451" "20110078572" "8689113" "20100125882" "20110238731" "20080139193" "8463890" "20050251576" "20020113820" "20120017250" "20100313169" "20110035741" "20060072721" "7206853" "20090006191" "8666367" "20030149988" "7848777" "20080288460" "8209618" "20080120330" "8990692" "8495235" "20080140702" "8943545" "20070135087" "20030095791" "20130144855" "8730028" "20110191163" "7073189" "8577808" "20100225949" "8484332" "7747280" "20030212804" "20030028892" "20110060688" "7966494" "20090049097" "20120060104" "8806341" "20040024889" "20090013348" "7636300" "20090207984" "20120159327" "8015446" "20050155067" "20090106659" "8156193" "20100082681" "20100075641" "8850477" "8635073" "20090298583" "8141111" "8504946" "20060025117" "20070088727" "20090164309" "20090276547" "8156547" "20040243466" "7558597" "8145637" "20060095502" "6484199" "20070066358" "20110202956" "20120023265" "20120127196" "7938727" "20080256205" "9406043" "20110016492" "7251832" "8789052"	US-PGPUB; USPAT	OR	OFF	2018/12/19 07:59

		"20120042047" "20100131979" "8280772" "20100313213" "8014542" "20040181667" "20080010336" "20110173547" "9788068" "20090254778" "20120124615" "7987492" "8391773" "20140101722" "7558563" "20120258742" "20120042391" "20060282783" "7962948" "20080168052" "8406386" "20090006213").PN.				
S113	2500	S100 S101 S102 S103 S104 S105 S106 S107 S108 S109 S110 S111 S112	US-PGPUB; USPAT	OR	OFF	2018/12/19 07:59
S114	0	S113 and transcod$3 with play with command	US-PGPUB; USPAT	OR	OFF	2018/12/19 08:00
S115	0	S113 and convert$3 with play with command	US-PGPUB; USPAT	OR	OFF	2018/12/19 08:00
S116	33	S113 and transcod$3 with command$1	US-PGPUB; USPAT	OR	OFF	2018/12/19 08:00
S117	59	("20020075332" | "20020120666" | "20020129102" | "20020133518" | "20020198778" | "20030004804" | "20030005000" | "20030018885" | "20030023488" | "20030028565" | "20030193520" | "20040088728" | "20050034151" | "20050144305" | "20060083194" | "20060098624" | "20060101098" | "20060203758" | "20070094408" | "20070155506" | "20070202923" | "20070288715" | "20080008439" | "20080028037" | "20080077526" | "20080126943" | "20080155600" | "20080267369" | "20080270881" | "20090108057" | "20090172780" | "20090228919" | "20090248802" | "20100027974" | "20100137028" | "20100205628" | "20100265939" | "20100281042" | "20110030020" | "20110060998" | "20110090898" | "20110107227" | "20110131607" | "20110138354" | "20110214148" | "20110231265" | "20110231566" | "20110296465" | "20120054616" | "20120059875" | "20120102209" | "7058356" | "7330875" | "7424718" | "7440972" | "7769827" | "7835505" | "7849485" | "8402494").PN. OR ("9767195").URPN.	US-PGPUB; USPAT; USOCR	OR	OFF	2018/12/19 08:03
S118	2	(" 20090248802").PN.	US-PGPUB; USPAT; USOCR; DERWENT	OR	OFF	2018/12/19 08:04
S119	3	("9338494").PN.	US-PGPUB; USPAT; USOCR; DERWENT	OR	OFF	2018/12/19 08:06

S120	8	((("TOUCHSTREAM") near3 ("TECHNOLOGIES") near3 ("INC"))).AS,AANM.	US-PGPUB; USPAT	OR	OFF	2018/12/19 08:23
S121	99	("20070202923" | "20100205628" | "20030023488" | "20030193520" | "20080008439" | "20100265939" | "20110060998" | "20110138354" | "20110214148" | "20020075332" | "20030023488" | "20040088728" | "20110231566" | "20090282470" | "20100313135" | "20030182663" | "20040268224" | "7453454" | "20050034151" | "20100027974" | "20060083194" | "20020120666" | "20030005000" | "20070094408" | "20080008439" | "20110014972" | "20110161396" | "20120166560" | "20110030020" | "7058356" | "20100281042" | "7424718" | "20020198778" | "20050144305" | "20060101098" | "20110060998" | "7440972" | "20090164641" | "20040008972" | "20060265657" | "20070083540" | "20100137028" | "20060101098" | "20070094408" | "20080126943" | "20080270881" | "20110231566" | "20020133518" | "20030028565" | "20080028037" | "20110107227" | "20110138354" | "20110214148" | "7330875" | "20110296465" | "20100138746" | "20070112785" | "20080140849" | "20110035692" | "20070288715" | "7835505" | "20020129102" | "20030018885" | "20080028037" | "20080267369" | "7330875" | "7769827" | "20030004804" | "20110090898" | "7424718" | "20080189617" | "20090259944" | "20120072846" | "20060200832" | "20060263038" | "20090049373" | "20100198860" | "20110228768" | "20060203758" | "20090228919" | "20030004804" | "20030028565" | "20110090898" | "20110107227" | "20110231265" | "20020120666" | "20030005000" | "20080270881" | "20110231265" | "7769827" | "20030142127" | "20100094728" | "20080187279" | "20110231565" | "7814144" | "20080077526" | "20080155600" | "20020075332" | "20020133518" | "20050144305" | "20030018885" | "20030193520" | "20060098624" | "20080267369" | "20100265939" | "20100174993" | "20110289419" | "20070050054" | "20080301737" | "20090254827" | "20100283586" | "20110007901" | "20110125594" | "20110156879" | "8086679" | "7849485" | "20020198778" | "20040088728" | "20060098624" | "7440972" | "20020129102" | "20100281042" | "20040268451" | "20100325552" |	US-PGPUB; USPAT	OR	OFF	2018/12/19 08:44

		"20120110464" | "7433922" | "7774708" | "20070055986" | "20080034394" | "20090094331" | "20110296454" | "8171507").PN.				
S122	23	S113 and (google).as.	US-PGPUB; USPAT	OR	OFF	2018/12/19 08:46
S123	2	("8250663 ").PN.	US-PGPUB; USPAT; USOCR; DERWENT	OR	OFF	2018/12/24 20:33
S124	2	("20120078997").PN.	US-PGPUB; USPAT; USOCR; DERWENT	OR	OFF	2018/12/24 20:35
S125	1	("20120130971 ").PN.	US-PGPUB; USPAT	OR	OFF	2018/12/25 09:40
S126	0	("20120130971 ").PN. and control$4 with presentation	US-PGPUB; USPAT	OR	OFF	2018/12/25 14:37
S127	1	("20120130971 ").PN. and control$4 samepresentation	US-PGPUB; USPAT	OR	OFF	2018/12/25 14:37
S128	0	("20120130971 ").PN. and control$4 same presentation	US-PGPUB; USPAT	OR	OFF	2018/12/25 14:37
S129	0	("20120130971 ").PN. and presentation	US-PGPUB; USPAT	OR	OFF	2018/12/25 14:37
S130	1	("20120130971 ").PN. and control$4	US-PGPUB; USPAT	OR	OFF	2018/12/25 14:38
S131	1	("20120130971 ").PN. and command$14	US-PGPUB; USPAT	OR	OFF	2018/12/25 14:39
S132	1	("20120130971 ").PN. and command$3	US-PGPUB; USPAT	OR	OFF	2018/12/25 14:50
S133	1	("20170351757").PN. and universal	US-PGPUB; USPAT; USOCR; DERWENT	OR	OFF	2018/12/25 14:59
S134	200	("8880491" "20120130971" "9338494" "20120210371" "8621507" "20120210350" "9924229" "9258613" "9628842" "20120210344" "20120117586" "20120112986" "9426510" "20120210378" "9264758" "8510769" "20120210365" "8949376" "9521453" "9648380" "8789086" "10097880" "8704854" "20120210343" "8984626" "20110066942" "20110064378" "20100180010" "20110063317" "20110064385" "20110064377" "20080189295"	US-PGPUB; USPAT	OR	OFF	2018/12/25 15:00

"20110067099" "20120117588"
"20110066944" "20110066663"
"20110067066" "9253222"
"20110066489" "8660545"
"20100235443" "10091345"
"20120210226" "7917932"
"20060008256" "20080209021"
"20090156181" "20080155470"
"20060253874" "8965920"
"20090061841" "20110064386"
"8265612" "8417096" "8661494"
"8868785" "20080155057"
"20080212945" "8175638"
"20080212944" "20120011558"
"20060265427" "20110137976"
"20120210225" "20080176540"
"20080273077" "20100153410"
"20060224761" "20100281108"
"9633656" "8904455" "20110088057"
"20110135283" "8473976"
"20110170842" "20130272681"
"8682145" "20040133657"
"20110145581" "20110131180"
"20120117590" "20060259930"
"20080160909" "20060173974"
"20070157072" "20120210238"
"8897737" "20080059533" "8271341"
"8108342" "8359612" "20080214215"
"9092519" "20110289108"
"20080209075" "20080175569"
"20080201751" "20020140855"
"20020040475" "20080133736"
"20090156179" "20100325238"
"20080180401" "7102688" "8468130"
"20060062544" "20080187115"
"8160495" "20130022185"
"20090069915" "20120323349"
"20080305738" "20130024539"
"20100325239" "20040133914"
"20090106200" "7966638"
"20060248557" "20130022335"
"20080175566" "20080160908"
"20080184317" "20080184359"
"20090304344" "20080182510"
"20080182508" "9055269"
"20060291506" "20110197237"
"20080183840" "20080182509"
"20060184431" "8700739"
"20060253782" "20080201375"
"20080162655" "20080163302"
"20090113315" "9009589" "8832564"
"20040086120" "20130097302"
"20080010372" "20100064332"
"20110004517" "7881656"
"20080155129" "20080201376"
"8813127" "8099455" "9490998"
"7711605" "20080244681"
"20040244031" "20080177860"
"8555318" "20090058822" "8606948"
"20090304346" "20080178238"
"6587127" "20120005311" "9275054"
"20110119637" "8090768" "8886759"
"20080276279" "20080155634"
"20100235762" "20080160910"

		"20100287070" "8112032" "20060059095" "20090049156" "20090030978" "20080141307" "8818179" "8556722" "20100042749" "20120210245" "8107977" "8271889" "20110009051" "20070136778" "20050076092" "20100042499" "20080155109" "8290929" "20040165006" "20070294096" "20060026162" "20070265073" "20090011780" "20100281042" "7650361" "20070288836" "8634703" "20120079126" "9009758" "9563702").PN.				
S135	200	("8046672" "20090112839" "7451177" "20110231867" "9178923" "8281001" "20120254929" "20100049835" "20090158136" "8751672" "20080256129" "20110158610" "8521857" "20080189752" "20100107201" "20120131098" "20040044725" "20090069038" "20110185378" "8695030" "20100146411" "20120210352" "20050177853" "20090177736" "20070299976" "20110060994" "20030110503" "8407755" "20040133908" "9065683" "8327403" "7956848" "20070204011" "8176121" "7076495" "20110150432" "20120210377" "20060206581" "20120059884" "20020156909" "8350971" "20020140571" "8204485" "20100161729" "7376414" "8402498" "8230341" "20020129089" "20080281689" RE44298 "20050208930" "9113195" "8407303" "7899808" "6476825" "20080229335" "8246454" "20040224723" "9769414" "20080098433" "9100726" "8930561" "8001471" "20100273553" "20020161794" "20100131848" "9405710" "20090019061" "20020169540" "8244315" "20090286560" "8315608" "20100333032" "20020087887" "20110087348" "8677402" "8707361" "9794647" "20060041926" "20100085857" "8301784" "7975062" "7224260" "8886710" "20080028023" "20120036543" "20120124625" "20060276230" "20090280792" "20070199014" "7870272" "7840631" "20100016080" "8769578" "7574723" "20090125609" "20100131978" "20070204057" "9137576" "20100333135" "20090112874" "20100333151" "20050208929" "8793305" "7426532" "20020151327" "20100318357" "8316052" "8094794" "8775647" "8266173" "20120117587" "20050080496" "20120079095" "6882299" "20080133529" "20120131609" "20080148328"	US-PGPUB; USPAT	OR	OFF	2018/12/25 15:00

		"7890957" "20110289460" "20100333136" "20080066080" "9003500" "7607582" "20100293598" "20090100065" "20040226048" "20100042747" "20110099157" "20120030701" "20070198744" "20080216153" "6938101" "20100070925" "20100306402" "20090113301" "20090047000" "20090254950" "8918645" "20030135859" "20050088333" "8467275" "20050216606" "20090156170" "20120078997" "20020162112" "20090156183" "20110320476" "20020143805" "9201627" "7784065" "20020161780" "8457661" "20140032636" "20120079276" "20090259711" "20070264982" "8090694" "20070006255" "8359351" "20100306815" "7506019" "20050091359" "20100057583" "7689510" "20100299761" "9271022" "6104334" "7475155" "20060136572" "8185477" "8676034" "20080140664" "7775886" "7962097" "8214422" "20050198353" "20060242259" "20070174624" "6769028" "8001236" "20100235891" "7716224" "20080243828" "20080243788" "20030233349" "7376696" "20070250194" "8077263" "9201668" "7702279" "8713605" "8954444" "20080124055" "20070250597" "20050210101" "7653691" "20120210366" "20060075429" "8464302").PN.				
S136	200	("20100169347" "8943169" "20060161635" "7143214" "8583758" "20070198633" "20080098426" "20120206317" "8792429" "8874244" "20060176271" "8150934" "20120263440" "9066199" "20080195698" "8381310" "20070204003" "8249559" "20060136577" "20030014630" "20110167447" "20120052941" "20110239142" "8126200" "20100205628" "8234282" "7565294" "20060253525" "20030132953" "20070168543" "20100185306" "9219734" "8291028" "20080114861" "8180645" "20120221645" "8887221" "20110163939" "7046161" "9525838" "8656424" "8875180" "20130166423" "20110247035" "20100169977" "8171520" "8977710" "20090249222" "20110321071" "20120075529" "20060004834" "8150911" "8374923" "20120079606" "20110087603" "8990215" "20110107225" "20040044723" "7873578" "8316389" "8209396" "20090089838" "20120039467" "20110069936"	US-PGPUB; USPAT	OR	OFF	2018/12/25 15:00

		"9479737" "20090234939" "9716774" "8812850" "20070016865" "9391808" "20090182806" "20090182805" "20090281874" "20070124769" "20100017821" "9374605" "20080134237" "20120023408" "7779097" "20080290987" "20070169115" "8860804" "6182094" "6591247" "6834294" "20090177303" "20070250195" "20130047083" "20080109298" "20090319599" "20120222061" "20120124475" "20110225066" "7725102" "20100169939" "20030141987" "20090234955" "8510847" "9067150" "20050177745" "8677392" "20110029604" "20080097632" "7996869" "9167208" "20060184968" "20060094360" "8079055" "20070121651" "20090024943" "20070005727" "8768307" "20080294674" "8826312" "20080229352" "8494907" "20100169942" "7734724" "8073380" "8122464" "20060085825" "8798445" "7054863" "8667163" "7895633" "8112504" "7519681" "20050177624" "6925495" "20080021775" "20080307477" "20080243694" "20120151525" "8577420" "20080276266" "20060174026" "8667546" "20110211813" "8503861" "8621338" "20090172758" "20060048201" "20080107102" "9356982" "9078043" "20100144329" "8036418" "20060259589" "20030043191" "20030182139" "20110055218" "20090198357" "8352576" "20110265111" "8806537" "9786159" "20060159109" "8588590" "7536708" "20090198358" "7433922" "20100208069" "20070277201" "20050058260" "20090052863" "20090043692" "20100031306" "20020087661" "20120072270" "8561114" "20050204309" "20070005450" "8490127" "8943122" "20090248182" "20090157792" "20090029685" "20080320508" "20030005429" "20080077483" "8352616" "7512882" "20040044724" "5732216" "9832532" "7519911" "20120042309" "20080256485" "6199076" "20090100477" "9883233" "20090064038" "20070288970" "20080205205" "20070073725" "20100235328" "20100036908" "8401681" "10080063" "20090172747").PN.				
S137	200	("8015263" "20120079080" "8978147" "20100071076" "20120124171" "8015491" "20110035668" "20060271977" "20060129458" "20100008586" "20020078144"	US-PGPUB; USPAT	OR	OFF	2018/12/25 15:00

"20100299701" "20060248570"
"20100138761" "7721301" "9628746"
"20030151618" "20110135271"
"20050286497" "20080155616"
"20070067309" "8213924"
"20030018971" "20100274858"
"20020069113" "9700791"
"20110138429" "20080195466"
"7454515" "20100031366"
"20100175093" "8081994" "7920901"
"20100106852" "20020161775"
"20090172726" "8296808"
"20080005130" "20060041639"
"20110119600" "20070183741"
"8700005" "20050251749" "8543095"
"6968364" "20060235700"
"20080195692" "20100064055"
"20100041457" "8438589" "7917439"
"8155582" "8671434" "20060068919"
"20090077584" "7979881"
"20110153048" "20110131604"
"20080141150" "20060123053"
"20120023521" "9152300"
"20090070438" "20110151905"
"20090186700" "20050149872"
"20110191677" "20090099858"
"9712582" "6829368" "20070124737"
"20100082567" "8601089"
"20110317634" "7069310"
"20110214147" "8204793" "8656040"
"7809802" "8452775" "8103957"
"20090177742" "20110289073"
"9626363" "20070028111"
"20110185312" "20050080878"
"8135865" "20040215741"
"20080222546" "8469813"
"20100082136" "20040148362"
"8611919" "20120054793"
"20110320963" "8429707"
"20030140090" "8271549" "8438287"
"20070204115" "8458749" "9864958"
"20060259588" "6956833"
"20100138298" "20060041640"
"8990104" "8832754" "20120023520"
"9124650" "20120173383"
"20100191608" "20060015649"
"20070055743" "9369776"
"20100299417" "9204193" "9055315"
"8799758" "20020007418"
"20040171376" "20070073726"
"9509796" "7814148" "8931010"
"8122004" "8437744" "20090117890"
"20110283311" "20050267994"
"7797242" "20090094511"
"20080293450" "20070189708"
"20050273827" "8739294" "8072956"
"20040177376" "9706160" "6603488"
"20090220216" "10057631"
"20050108769" "9116340" "8156176"
"8738639" "8149701" "7509178"
"20080155062" "8539093"
"20060265329" "20080117922"
"20080140523" "9414101" "9521174"
"20070209005" "20080244637"

		"8069232" "8694531" "20100278321" "8682262" "20110093892" "20100037264" "20080046919" "8417258" "7848959" "8051453" "20100251136" "20090228125" "20070016922" "20110184862" "7080030" "8689142" "7917645" "20120036549" "20100222090" "20050278435" "8965807" "20100150395" "20090099912" "9483755" "9519940" "20110137729" "20070073728" "20070048714" "7921309" "20040172481" "8526928" "20070245882" "9258326" "20120019400" "20050136949" "20080155663" "20100100636" "20080098432" "20120011553" "20100296654" "7155436" "6055560").PN.				
S138	200	("7593576" "20050265701" "6288716" "20110119149" "20080082381" "20090204639" "8380878" "8341513" "7627341" "20110164175" "20090043657" "7516213" "8606314" "20070073727" "20100138746" "8826145" "9135363" "8086226" "8495686" "8621541" "8589991" "20110138331" "8046802" "20100145809" "7818321" "20110035462" "20030229899" "9078082" "7873742" "7724716" "20110138415" "8631436" "20090017827" "20060208074" "20080189766" "20060179129" "20080215452" "20120096092" "8117062" "20050198574" "20050021478" "20110137728" "20110131600" "20110082761" "9824389" "20060159366" "7725360" "8856118" "20090052870" "20100011299" "7707601" "20060127037" "7487112" "20070100904" "20110219421" "7769819" "20120036584" "9171851" "20020091848" "20070239546" "20050091268" "20090102983" "20050210120" "20050108519" "20070250400" "20110218044" "8707366" "20100169464" "7792920" "20100313250" "7917933" "20100118200" "20050182828" "7689613" "8230466" "20070173266" "20070016653" "20030023505" "20050267883" "8291320" "8433611" "5721827" "20020124100" "6198479" "20090006644" "20120162537" "20070294292" "9933937" "20110179453" "20090318192" "9032296" "8868640" "7693992" "8909695" "7480703" "20080094400" "20080244010" "8375208" "7949722" "20090210493" "20080250431" "20080221909" "20090249418" "20090099859" "8095424"	US-PGPUB; USPAT	OR	OFF	2018/12/25 15:00

		"20060182424" "6735628" "20050193094" "20070118426" "8341210" "20110131518" "20080071834" "8660530" "20050055730" "20060193606" "8656446" "20110181780" "20090172108" "7178106" "20100198704" "7673315" "20110170837" "20090144624" "7472175" "20070155306" "20050055717" "20110185036" "9886599" "7337147" "8667152" "20060031551" "20110214045" "8060625" "20100257458" "20100138297" "20070162939" "20050278729" "20050193322" "20110289317" "8621025" "20090043870" "20080215507" "20050033855" "20080065974" "20070291710" "20090099836" "7426329" "8086575" "20010038392" "20070061845" "8244179" "20070061835" "20080200161" "20110126236" "20090063645" "20070174774" "20030122966" "8106742" "7487441" "20080147772" "20060085351" "7500007" "20050060756" "20040177375" "8621509" "20110026692" "20120079119" "20020069308" "8220708" "8977294" "8825468" "20070067315" "7920856" "20100087179" "20090006375" "20110269424" "8190692" "7988042" "20020169797" "20110197159" "20040025185" "9128961" "20050086696" "8176431" "20100241475" "20080027827" "20030065805" "20100070565" "20080320391" "8375131" "20020147699" "7578002" "20110113354" "20070050734" "8291459" "20090228807" "20110087971" "20080254832" "20120078952" "20080317441").PN.				
S139	200	("20110225417" "7966552" "20020107802" "8176506" "20110013885" "8935300" "20110289414" "9047516" "7756545" "7735012" "20170149600" "6944632" "7194235" "8463869" "20040103297" "20040068536" "8769297" "9635066" "20100299712" "8584171" "9681105" "7693902" "20110040894" "7574691" "20110181496" "20110078174" "20100161818" "20050039135" "7130616" "8498628" "7925299" "20090327449" "7356575" "20100279673" "8161411" "9015179" "20090018898" "20090049074" "7793823" "9277156" "20090228578" "20060064720" "9602512" "8424041" "8650283" "20100234052" "20110125765" "20170228789"	US-PGPUB; USPAT	OR	OFF	2018/12/25 15:00

		"9087182" "8108797" "20040128514" "20010031066" "20100235476" "20110265119" "8572257" "20100255890" "7812854" "9037999" "20060149813" "20050165849" "7720686" "8451232" "9178946" "20090228544" "7644172" "6792452" "8565740" "20060068911" "20070005504" "20130014169" "8041775" "20060156353" "20080234000" "8555395" "7519073" "9326016" "20080097984" "7721103" "20120130834" "20110153849" "20070124772" "7525975" "8682750" "7571458" "8607287" "20080034081" "20090005080" "20080177713" "9201882" "7734684" "20060080702" "8589779" "20080141303" "7308487" "20110287757" "20060265477" "8265862" "6704864" "20110016488" "20070055997" "20090204885" "20080133551" "20100134299" "7908467" "20090125935" "20050266884" "8554938" "9077859" "8898708" "7886318" "8166139" "20060080408" "20070271366" "8843589" "20060242275" "20090070673" "20060259436" "20100297964" "20110197236" "8310985" "8990119" "7593982" "7535465" "6609105" "20090094512" "20090054092" "20070124779" "6892230" "20020068558" "20070124201" "20050010963" "20100211636" "20030220835" "20120110126" "20100043046" "8078751" "8943539" "20040068756" "20100332994" "20110016503" "20090156251" "9826046" "20090164641" "8190754" "20040088731" "8862762" "7558838" "8875213" "20100199219" "9277292" "20080004952" "8516125" "20060085349" "20110311095" "8060631" "7218243" "8621531" "8341527" "7849160" "20100094726" "20070048713" "8544046" "8615164" "7797431" "7881658" "9118934" "20080242280" "20080281805" "20120081299" "9167301" "8245142" "20080155006" "20080281943" "20080028223" "8205081" "20100138884" "20080092045" "7237104" "20110040658" "9178954" "20080148310" "20090150553" "8898715" "20060259429" "20120131626" "20110282721" "8214338" "20090063660" "7856225" "20040033821" "9516357" "20120042385" "8954597" "7308644" "8023935" "20110040615" "20070288985" "20100145861" "8635196" "20040205811").PN.				
S140	200	("20090094341" "20110106910"	US-	OR	OFF	2018/12/25

		"20050172309" "20100058220" "7937450" "7865366" "7840977" "20080275864" "20120062471" "6856990" "20120054616" "20040268451" "20060253417" "20090144801" "20040254887" "20080271066" "20100011135" "20060085835" "9100702" "20090177966" "7751807" "8607263" "8336077" "8392959" "9524072" "6243707" "9083791" "9990439" "20030140121" "20030221127" "8151259" "9584563" "20120084653" "7787749" "20070157234" "20040019497" "20050091311" "7739596" "20110145721" "20120226912" "20080033918" "20120253937" "7761898" "7945616" "8776122" "20070043766" "20080209329" "7996496" "7925300" "20060222322" "20040175097" "7647430" "7860531" "8561202" "20100228880" "7383229" "20030103088" "20070079352" "20020033844" "20080181575" "7269634" "20050044189" "20110179139" "20120005702" "20030189509" "9582507" "8413056" "8713304" "20070157240" "9021522" "6725281" "20040248561" "9351048" "7269854" "7602756" "8407609" "20050060527" "8893203" "8063923" "20070207795" "8458740" "20080165143" "20030145338" "9269086" "20090271831" "7379661" "20040174905" "20090100182" "6884172" "20100081472" "7894703" "20080194276" "8005345" "20050210391" "20100169410" "7149208" "20110021219" "8707347" "9219729" "20060117344" "20100279735" "7953872" "8910218" "20090171715" "8219911" "20050114468" "9639619" "20090019492" "7694235" "8112815" "20100186034" "20120066338" "9253205" "8025572" "20020035621" "20080016196" "20070124416" "8315950" "7039858" "7219308" "20070260604" "20050166232" "20080307339" "8918461" "20090276633" "20080052742" "7310770" "8621533" "20030188320" "7831899" "20070174147" "20040174858" "20120011449" "20070150286" "9342662" "20070157241" "8914394" "8499088" "20110179184" "20090307731" "8386465" "9100549" "8332478" "7953387" "20080301189" "8317618" "8185475" "20030060157" "7103834" "7089307" "20090138922" "20120151509" "8122248" "8949860" "20060075426" "20040175098"	PGPUB; USPAT			15:00

		"20110066843" "6965770" "7426637" "20100050096" "20090276439" "7231592" "7584353" "20090298490" "8732234" "20060253330" "6192340" "20040174863" "8112810" "20060190413" "20100211466" "20060282864" "20140289747" "20120092444" "20110162009" "6725260" "20080183584" "20090280784" "20070178889" "20040148638" "20060181982" "8219720" "20070101361" "7603437" "20090319695" "20080162623" "20040175096" "20070038717" "20070196802" "20060012813" "7133837" "20070066348" "20120147825" "20060047774" "20070288967" "8775938" "20090049297" "20060282319" "20090133070" "7500177").PN.				
S141	200	("7130895" "8843590" "20080249986" "8578502" "20020112002" "20080222520" "20090303186" "20070250695" "20050120305" "7339493" "7558846" "20080320543" "7308645" "20100057882" "9769544" "20080229204" "8267790" "20020165024" "20090257729" "7624416" "7831605" "20090215477" "20070078949" "20080221948" "20120077586" "20070066291" "8432489" "20090049052" "20090307719" "20100174776" "20100082743" "20070157260" "20060053375" "20100333143" "7747782" "8539533" "10108730" "20090265789" "20060181963" "8577399" "8266223" "20100146544" "8103307" "8577338" "20060277308" "20090298485" "7761602" "8089503" "8849659" "9826273" "8346605" "20040183756" "20090307658" "20060172700" "20050076383" "9955205" "20120047156" "7640327" "20120078937" "20040225564" "6760916" "20110072456" "8826445" "20030237043" "20110179441" "20110185392" "9367489" "20100184422" "9401080" "8856844" "20040253945" "20130018878" "20070048712" "8156206" "8577971" "7376581" "7934170" "8443382" "9047375" "9756170" "7739584" "8438596" "7299304" "7533061" "20080250238" "7995992" "20120133731" "20070250716" "7818350" "7817989" "20090265793" "20030067908" "20110320626" "9253272" "8584184" "8667521" "20090006570" "20100138487" "20110064387" "20030048295" "20120166655" "20120266066" "20060195366" "20040133848" "20060195521" "7853893" "8429687"	US-PGPUB; USPAT	OR	OFF	2018/12/25 15:00

		"6195693" "7711795" "20050120301" "20030050058" "20100257569" "20030061607" "7587372" "20070086445" "20050022110" "7254825" "20060190616" "8121843" "6708203" "20020100052" "20110061071" "8462645" "8271575" "20070245019" "9417758" "7937108" "20070016671" "8881210" "20110306368" "10027998" "20090234923" "20050060755" "20070220024" "9292368" "20070294726" "7973978" "8667299" "7421482" "20110185048" "20110236872" "20110067059" "20080256563" "8666528" "20030012403" "20100134275" "7624417" "20090265549" "8307390" "20090144204" "8814692" "20110164264" "7996775" "20020046407" "20110099277" "7487230" "8201109" "20040220791" "20090217365" "7407092" "6636892" "20050060542" "7895076" "8244595" "20110040731" "8255968" "20090265557" "8813166" "20030120748" "20080118227" "7956272" "20080282083" "20090061824" "10091535" "20020112237" "9367530" "20060291434" "7787818" "20050091302" "8996420" "20060075427" "8467724" "8970668" "20080242221" "9959897" "8090659" "20020049978" "20110004943" "8704863" "8387096" "20100241491" "20080152097" "20070022178" "20100064227" "9384299" "20110078721" "6834308" "20080065486" "20090013059" "7412538").PN.				
S142	200	("20060136980" "8359382" "20080318529" "20020178360" "20100134815" "7904069" "20100299687" "20060161662" "20110289199" "20060129938" "20070117635" "20100299697" "20070169087" "20110173054" "7499765" "6546419" "8614625" "9338276" "20010011284" "20060015201" "6170060" "8391155" "8087091" "8055588" "20100046030" "8678928" "20110271194" "20120066715" "8244589" "8521832" "7168051" "20070063039" "20050235338" "20090100062" "20080052252" "6791588" "20040249851" "9143341" "7469829" "8087047" "20030140107" "20100273525" "20120023126" "8645303" "20020004855" "20050078944" "20100174655" "20110277006" "8107921" "7406508" "20050010866" "20080194175"	US-PGPUB; USPAT	OR	OFF	2018/12/25 15:00

"20040236945" "20070300261"
"20050022210" "20080219638"
"20110166860" "20120036585"
"20080288600" "9747622"
"20070282959" "20080307462"
"7308483" "20080235733"
"20050132405" "20120042006"
"9191610" "7107045" "20060258289"
"20040024580" "20100299709"
"9172915" "20060136964"
"20020053078" "20010030667"
"7379901" "9137577" "20170085919"
"8676711" "20060021057"
"20060168126" "20110185393"
"8984562" "20080250239" "7570761"
"7920855" "20080288461"
"20100332218" "7765280"
"20070107032" "8589795"
"20100057469" "20090228792"
"7412666" "8359031" "7895622"
"20070066343" "9451326" "8804039"
"7566274" "20080109528" "8332892"
"8856833" "20040177371" "6496802"
"20120185886" "20060282774"
"7567671" "9378516" "20080109839"
"20060085821" "20070061759"
"20040103184" "7466823"
"20100095337" "20070061364"
"20050071780" "20100223314"
"20110131607" "20080081699"
"20100154021" "7505605"
"20060294558" "20060120560"
"8806530" "7983994" "8886545"
"20100137036" "7555543"
"20070198532" "20110228763"
"20120266084" "8316399"
"20060190410" "7159174" "6249914"
"20020062252" "20030101294"
"8321401" "20100223393" "7120871"
"20040260800" "20120192055"
"20050091111" "20100186057"
"20100312833" "20090013265"
"9003473" "20040100492" "7987491"
"20050022127" "8990702"
"20030229900" "9377924"
"20090088206" "20010039659"
"8090403" "9076155" "20080180391"
"20080214236" "20120078885"
"8909740" "20110193780"
"20070185840" "20110296472"
"20110277002" "7555528"
"20120254453" "20050246624"
"8141117" "7653446" "9407686"
"20110161996" "9443377" "8417720"
"7444438" "5957695" "20020092021"
"20120078953" "20070073596"
"20110113450" "20050229213"
"8909296" "7831930" "7996228"
"20070063032" "7921446" "7171018"
"20070195987" "20090152342"
"20020002541" "7711564" "8443288"
"8622839" "20080278772"
"20090133078" "8073590"
"20080065507" "20110282965"

		"20020082922").PN.				
S143	200	("20110131297" "20070055935" "8736561" "20050021470" "8914402" "20050055716" "20080307463" "8606848" "20100306154" "20090144168" "20020194601" "20110072107" "20100198860" "20030009694" "8949266" "20020013852" "20130031594" "6259449" "20110055026" "20100134843" "20050057538" "7392285" "20070003224" "20070033531" "7624411" "7738918" "8661464" "20050058319" "7637424" "20040044569" "20050240665" "20040174896" "20060195600" "20070073845" "20080065567" "8732232" "20080320396" "7899915" "20090181641" "20040220926" "8813112" "20110277003" "20100280641" "8433306" "20090133069" "7984097" "8391774" "8401366" "7716371" "9911126" "20090251409" "20100046744" "8918812" "9788043" "7480746" "7877103" "9286388" "20060280303" "20070199030" "20070124781" "9961399" "7415430" "20090006192" "7814022" "20110213681" "8219493" "20090258633" "8683510" "8559933" "20090046321" "20080080836" "9807224" "20030041110" "8055688" "7392481" "7632186" "20130018995" "7818423" "20070113264" "8117644" "20080288890" "20030060240" "20050108659" "20060218294" "7676436" "20060031549" "8140649" "20120131570" "8442423" "7523225" "8527640" "20060282512" "20070239611" "7464194" "20090249400" "20070043616" "20060242590" "7386480" "7873708" "20040025190" "20130014190" "7949730" "7716385" "7716273" "7024256" "20090037382" "8196044" "20050004981" "8307286" "6487663" "20110249079" "7673314" "20040070600" "20070127887" "20030014436" "20060282389" "20090141875" "7647614" "20090282111" "8402506" "20070019069" "7870197" "20090217084" "20100119208" "20070022438" "20080222687" "9733804" "20070155311" "9392101" "8620994" "8528032" "20060123339" "8738537" "20080167968" "9003309" "20040268400" "8332530" "20110077046" "8868678" "20040163073" "8700534" "9088826" "8042140" "7870585" "8126313" "8261300" "20070066279" "8793332" "8122466" "8537982" "20110185296" "9621855" "20100241699" "8583602"	US-PGPUB; USPAT	OR	OFF	2018/12/25 15:00

		"8803940" "20100169463" "9318152" "8745228" "20070165144" "20110041154" "20040199615" "20070022447" "20100100915" "20050169467" "8583915" "20110145768" "9893908" "8467773" "20080133759" "9288548" "20070063037" "8261315" "20100325660" "20070050402" "20060095472" "7802285" "20120266077" "20090144130" "8103371" "20120108293" "8060407" "20040098754" "8107929" "9083600" "8959085" "20090183242" "20090031358" "20100251284" "7437434" "20050267935" "7904344" "20050041150" "7590696" "20110083073" "20080307456" "8001187" "20090150406" "20070157194" "20040012613" "20090247221").PN.				
S144	200	("20060023257" "9124441" "20080189391" "7991493" "20100071013" "20120233036" "8266662" "6907225" "9665629" "20090093897" "8966101" "20090215478" "7493283" "20060282513" "20050245241" "20080201201" "8060909" "7472353" "20100095332" "8239889" "8527422" "20100064307" "20080004978" "8028323" "20090228897" "20080319871" "20110163969" "9098856" "6529949" "20100114857" "20040051812" "9135626" "7895532" "8968077" "8429516" "20090320073" "9113207" "20110183654" "20110033166" "8972862" "9037674" "20030236907" "20120059910" "20090133090" "20090150941" "20070142024" "20100303450" "20090150937" "20080109852" "20080263600" "20120026278" "8407809" "20120050012" "20070288986" "8140390" "8386304" "7506802" "20050097503" "20090276485" "20120130845" "20140040445" "7657920" "20100328701" "20090094096" "20080027567" "20080003993" "20090142042" "7519703" "20080132254" "7953386" "20100235381" "20070174487" "20080260115" "20100131642" "20110004841" "20110151844" "20090204487" "8806340" "20070005783" "20030021441" "20060282847" "8301648" "20060184609" "8519964" "20070156841" "6934837" "20070286420" "20040088180" "20030095525" "20110041076" "20120198347" "20070117617" "9390441" "20060095471"	US-PGPUB; USPAT	OR	OFF	2018/12/25 15:00

		"20110195790" "20060150120" "7739709" "20100064220" "7984098" "7167703" "20070250912" "8312079" "7857217" "9153125" "20070201502" "20100077441" "7877776" "8041829" "20060041893" "20110202424" "20060129688" "20060047844" "7380260" "20110302052" "7761892" "20090327244" "7849131" "9454341" "8380786" "9292866" "8161172" "20020124249" "20050226166" "20120084662" "8601526" "20070101362" "10102208" "8473558" "8407756" "20100228630" "8644463" "20110072106" "8973072" "9178712" "8943409" "20030115293" "20120192064" "20120158531" "20120158514" "8325920" "9167302" "20110054899" "8051454" "8639733" "20100319017" "20100070876" "20080147883" "8024186" "7056217" "20080098357" "20020077170" "20090043869" "8078230" "6970916" "8750687" "20090164653" "20050021494" "6507727" "7735107" "20040031058" "20060282514" "20100279669" "8244898" "20070061309" "10122569" "20110321107" "8595186" "20080016255" "8510123" "7761090" "20060112336" "8473865" "8812614" "20050216942" "20100198822" "20070180485" "7526573" "20060064350" "20030194211" "20020124247" "20100319026" "20070066289" "20030212613" "7925729" "7941819" "20100138012" "7441019" "7555466" "20090197681" "20070066356" "20100115568" "20130014171" "8336773" "20100222102" "20100129057" "8272019" "7738919" "8016202" "7483958" "20100185448").PN.				
S145	200	("20020049037" "6952835" "8412839" "7930561" "20030033420" "20110099286" "8091110" "20120005287" "8131458" "20070198698" "6910068" "8869226" "8072629" "9363470" "20090144144" "20060227761" "9256888" "20090098857" "20070027857" "9002895" "20080184304" "20060174348" "9693013" "7421656" "20030032409" "6408128" "8306859" "20070208564" "20140033025" "20070063012" "7925973" "20070099694" "8051452" "8856641" "8351907" "20110138327" "9185171" "20080207233" "20020116476" "7793325" "8458369" "20100146051" "20120054615" "7660572" "20120246240" "20080133416" "20100322035" "20110113122" "20060161865" "20120072957"	US-PGPUB; USPAT	OR	OFF	2018/12/25 15:00

"7707614" "8688709" "8600429"
"9131256" "20050039133"
"20100105454" "20070038931"
"8838686" "20110145726"
"20100198982" "20110072078"
"20070204308" "20090138484"
"9389822" "7353267" "20120246585"
"20090187486" "20120054811"
"7188342" "20050138192"
"20120078954" "8793748"
"20050074018" "20090319672"
"20090325712" "8880624"
"20090157513" "20100185736"
"7356765" "20080120196" "7873978"
"7724399" "8938217" "20100023885"
"20060206563" "20100153207"
"7523507" "6671807" "20090005071"
"20080250319" "7634780"
"20120086857" "20100321201"
"20060206340" "7523161" "8978066"
"20020097984" "20090104872"
"20100206950" "20090325642"
"8645838" "9355076" "20090270085"
"20030236906" "20080300983"
"20070281607" "20120131465"
"20100077095" "8255552" "8176521"
"20070067253" "7103315"
"20050149508" "20100186038"
"20080188209" "8130668"
"20100077433" "20070106681"
"20080172243" "8166511" "7676827"
"20100317335" "20040117843"
"7375673" "8023929" "20060085352"
"20070294622" "20070066355"
"20010033736" "20070142022"
"8875172" "8062134" "7545784"
"20100263004" "9900557" "7921154"
"8589580" "20060107215"
"20110197264" "20020002707"
"20110022661" "8788589" "8209376"
"8065710" "20110060587"
"20070162502" "8483668" "7890661"
"20080313146" "8306507"
"20050283810" "20120147268"
"20080184306" "7574448"
"20070180479" "20090150405"
"20110166918" "8522279"
"20070018952" "20110276335"
"20090235297" "6792323"
"20110055256" "20080141132"
"20110161377" "8886234"
"20040045040" "20090144129"
"8769528" "7548948" "8280949"
"8423427" "8990214" "8910295"
"20100174783" "20100313221"
"9215506" "9015270" "20020199001"
"20080293387" "8966567"
"20070100757" "8687016"
"20100049606" "20050166153"
"20060282390" "20040243482"
"9690866" "20080187112"
"20120054808" "8458741" "9037502"
"20060140170" "20120252557"
"20070199076" "20120005041"

		"20020146122" "20090277956" "9300919" "8250179").PN.				
S146	100	("7937451" "20110078572" "8689113" "20100125882" "20110238731" "20080139193" "8463890" "20050251576" "20020113820" "20120017250" "20100313169" "20110035741" "20060072721" "7206853" "20090006191" "8666367" "20030149988" "7848777" "20080288460" "8209618" "20080120330" "8990692" "8495235" "20080140702" "8943545" "20070135087" "20030095791" "20130144855" "8730028" "20110191163" "7073189" "8577808" "20100225949" "8484332" "7747280" "20030212804" "20030028892" "20110060688" "7966494" "20090049097" "20120060104" "8806341" "20040024889" "20090013348" "7636300" "20090207984" "20120159327" "8015446" "20050155067" "20090106659" "8156193" "20100082681" "20100075641" "8850477" "8635073" "20090298583" "8141111" "8504946" "20060025117" "20070088727" "20090164309" "20090276547" "8156547" "20040243466" "7558597" "8145637" "20060095502" "6484199" "20070066358" "20110202956" "20120023265" "20120127196" "7938727" "20080256205" "9406043" "20110016492" "7251832" "8789052" "20120042047" "20100131979" "8280772" "20100313213" "8014542" "20040181667" "20080010336" "20110173547" "9788068" "20090254778" "20120124615" "7987492" "8391773" "20140101722" "7558563" "20120258742" "20120042391" "20060282783" "7962948" "20080168052" "8406386" "20090006213").PN.	US-PGPUB; USPAT	OR	OFF	2018/12/25 15:00
S147	2500	S134 S135 S136 S137 S138 S139 S140 S141 S142 S143 S144 S145 S146	US-PGPUB; USPAT	OR	OFF	2018/12/25 15:00
S148	60	S147 and (universal with command$1)	US-PGPUB; USPAT	OR	OFF	2018/12/25 15:00
S149	10	((("Strober") near3 ("David"))).INV.	US-PGPUB; USPAT; USOCR	OR	OFF	2018/12/25 15:03
S150	9	S149 and (universal with command$1)	US-PGPUB; USPAT	OR	OFF	2018/12/25 15:03
S151	4	S149 and (universal with command$1).clm.	US-PGPUB; USPAT	OR	OFF	2018/12/25 15:03

S152	6	S147 and (universal with command$1).clm.	US-PGPUB; USPAT	OR	OFF	2018/12/25 15:08

EAST Search History (Interference)

< This search history is empty>

12/26/2018 2:14:36 PM
C:\Users\dhope\Documents\EAST\Workspaces\15687249.wsp

To: IPDOCKET@SHB.COM,IPRCDKT@SHB.COM,
From: PAIR_eOfficeAction@uspto.gov
Cc: PAIR_eOfficeAction@uspto.gov
Subject: Private PAIR Correspondence Notification for Customer Number 149550

Jan 08, 2019 03:43:50 AM

Dear PAIR Customer:

SHOOK, HARDY & BACON LLP
(Touchstream Technologies, Inc.)
2555 GRAND BLVD
KANSAS CITY, MO 64108-2613
UNITED STATES

The following USPTO patent application(s) associated with your Customer Number, 149550 , have new outgoing correspondence. This correspondence is now available for viewing in Private PAIR.

The official date of notification of the outgoing correspondence will be indicated on the form PTOL-90 accompanying the correspondence.

Disclaimer:
The list of documents shown below is provided as a courtesy and is not part of the official file wrapper. The content of the images shown in PAIR is the official record.

Application	Document	Mailroom Date	Attorney Docket No.
15687249	CTNF	01/08/2019	TSTH.278581
	892	01/08/2019	TSTH.278581

To view your correspondence online or update your email addresses, please visit us anytime at https://sportal.uspto.gov/secure/myportal/privatepair.

If you have any questions, please email the Electronic Business Center (EBC) at EBC@uspto.gov with 'e-Office Action' on the subject line or call 1-866-217-9197 during the following hours:

Monday - Friday 6:00 a.m. to 12:00 a.m.

Thank you for prompt attention to this notice,

UNITED STATES PATENT AND TRADEMARK OFFICE

PATENT APPLICATION INFORMATION RETRIEVAL SYSTEM

Electronic Patent Application Fee Transmittal

Application Number:	15687249
Filing Date:	25-Aug-2017
Title of Invention:	PLAY CONTROL OF CONTENT ON A DISPLAY DEVICE
First Named Inventor/Applicant Name:	David Strober
Filer:	Keith Joshua Bae/Hope Mischlich
Attorney Docket Number:	TSTH.278581

Filed as Large Entity

Filing Fees for Utility under 35 USC 111(a)

Description	Fee Code	Quantity	Amount	Sub-Total in USD($)
Basic Filing:				
Pages:				
Claims:				
Miscellaneous-Filing:				
Petition:				
Patent-Appeals-and-Interference:				
Post-Allowance-and-Post-Issuance:				
Extension-of-Time:				

Description	Fee Code	Quantity	Amount	Sub-Total in USD($)
Extension - 2 months with $0 paid	1252	1	600	600
Miscellaneous:				
			Total in USD ($)	**600**

Electronic Acknowledgement Receipt	
EFS ID:	35965189
Application Number:	15687249
International Application Number:	
Confirmation Number:	4059
Title of Invention:	PLAY CONTROL OF CONTENT ON A DISPLAY DEVICE
First Named Inventor/Applicant Name:	David Strober
Customer Number:	149550
Filer:	Keith Joshua Bae/Hope Mischlich
Filer Authorized By:	Keith Joshua Bae
Attorney Docket Number:	TSTH.278581
Receipt Date:	09-MAY-2019
Filing Date:	25-AUG-2017
Time Stamp:	16:08:21
Application Type:	Utility under 35 USC 111(a)

Payment information:

Submitted with Payment	yes
Payment Type	CARD
Payment was successfully received in RAM	$600
RAM confirmation Number	051019INTEFSW16084600
Deposit Account	
Authorized User	
The Director of the USPTO is hereby authorized to charge indicated fees and credit any overpayment as follows:	

File Listing:

Document Number	Document Description	File Name	File Size(Bytes)/ Message Digest	Multi Part /.zip	Pages (if appl.)
1	Amendment/Req. Reconsideration-After Non-Final Reject	Response.pdf	77584 ce3f6815cd91d24270ce8c35f92fd2df6ff5ce47	no	14
Warnings:					
Information:					
2	Fee Worksheet (SB06)	fee-info.pdf	31025 5adc0dddfa83b4368ccad4df0d9730c1f8f1102e	no	2
Warnings:					
Information:					
		Total Files Size (in bytes):	108609		

This Acknowledgement Receipt evidences receipt on the noted date by the USPTO of the indicated documents, characterized by the applicant, and including page counts, where applicable. It serves as evidence of receipt similar to a Post Card, as described in MPEP 503.

New Applications Under 35 U.S.C. 111
If a new application is being filed and the application includes the necessary components for a filing date (see 37 CFR 1.53(b)-(d) and MPEP 506), a Filing Receipt (37 CFR 1.54) will be issued in due course and the date shown on this Acknowledgement Receipt will establish the filing date of the application.
National Stage of an International Application under 35 U.S.C. 371
If a timely submission to enter the national stage of an international application is compliant with the conditions of 35 U.S.C. 371 and other applicable requirements a Form PCT/DO/EO/903 indicating acceptance of the application as a national stage submission under 35 U.S.C. 371 will be issued in addition to the Filing Receipt, in due course.
New International Application Filed with the USPTO as a Receiving Office
If a new international application is being filed and the international application includes the necessary components for an international filing date (see PCT Article 11 and MPEP 1810), a Notification of the International Application Number and of the International Filing Date (Form PCT/RO/105) will be issued in due course, subject to prescriptions concerning national security, and the date shown on this Acknowledgement Receipt will establish the international filing date of the application.

PATENT

IN THE UNITED STATES PATENT AND TRADEMARK OFFICE

Appl. No.	:	15/687,249	Confirmation No.	4059
First Inventor	:	David Strober		
Applicant	:	Touchstream Technologies, Inc.		
Filed	:	08/25/2017		
Title	:	PLAY CONTROL OF CONTENT ON A DISPLAY DEVICE		
Group Art Unit	:	2172		
Examiner	:	Gaffin, Jeffrey A		
Atty Docket No.	:	41179.278581		
Customer No.	:	149550		

VIA EFS-WEB – May 9, 2019

Mail Stop Amendment
Commissioner for Patents
P. O. Box 1450
Alexandria, VA 22313-1450

REQUEST FOR AN EXTENSION OF TIME

It is hereby requested that the time period for responding to Office Action mailed January 08, 2019, be extended for two (2) months or until May 9, 2019. The appropriate extension fee under 37 C.F.R. § 1.17(a)(2) is submitted herewith by way of electronic payment.

RESPONSE

In response to the Office Action mailed January 08, 2019, please reconsider the above-identified application as follows:

Listing of the Claims: begin on page 2 of this paper.

Remarks: begin on page 8 of this paper.

Listing of the Claims:

This listing of claims will replace all prior versions, and listings, of claims in the application:

1. (Original) A non-transitory computer storage medium storing computer-useable instructions that, when used by one or more computing devices, cause the one or more computing devices to perform operations for remotely presenting various types of content, the operations comprising:

initializing a connection with a remote server device to facilitate an association with a remote computing device;

receiving, from the remote server device, a first message that includes at least one command in a first format, wherein the first message is received based at least in part on a second message including at least one command in a second format having been sent from the associated remote computing device;

employing a first media player application operable to load a first piece of content referenced in the received first message; and

controlling a presentation of the first piece of content loaded in the employed first media player application based on a first command in the first format having been included in the received first message for recognition by the first media player application.

2. (Original) The non-transitory computer storage medium of claim 1, wherein a command in the second format is a universal command.

3. (Original) The non-transitory computer storage medium of claim 2, wherein the first format is different than the second format.

4. (Original) The non-transitory computer storage medium of claim 1, wherein the second message is sent to the remote server device.

5. (Original) The non-transitory computer storage medium of claim 1, wherein the at least one command in the second format is converted into the at least one command in the first format based at least in part on the second message including therein a reference to the first piece of content.

6. (Original) The non-transitory computer storage medium of claim 1, wherein the at least one command in the second format is converted into the at least one command in the first format based at least in part on a reference to the first media player application having been included in the second message.

7. (Original) The non-transitory computer storage medium of claim 1, wherein the first media player application is employed based at least in part on the received first message including therein a reference to the first media player application.

8. (Original) The non-transitory computer storage medium of claim 1, wherein controlling the presentation includes an execution of the first command.

9. (Original) The non-transitory computer storage medium of claim 1, the operations further comprising:

obtaining the first media player application based on a determination that the first media player application is not already being employed.

10. (Original) The non-transitory computer storage medium of claim 9, wherein the first media player application is obtained from a content provider that corresponds to the referenced first piece of content.

11. (Original) The non-transitory computer storage medium of claim 1, wherein the connection with the remote server device is maintained, for at least a duration that the first media player application is being employed, to facilitate a change from the first media player application to a second media player application operable to load a second piece of content referenced in a second message received from the remote server device.

12. (Original) A computer-implemented method for remotely presenting various types of content, comprising:

initializing, by a content presentation device, a connection with a remote server device to facilitate an association between the content presentation device and a remote computing device;

receiving, by the content presentation device and from the remote server device, a first message that includes at least one command in a first format, wherein the first message is received based at least in part on a second message including at least one command in a second format having been sent from the remote computing device associated with the content presentation device;

employing, while the connection with the remote server device is maintained, a first media player application operable to load a first piece of content based at least in part on the first piece of content being referenced in the received first message; and

controlling, by the content presentation device, a presentation of the first piece of content loaded in the employed first media player application based on a first command in the first format having been included in the received first message for recognition by the first media player application.

13. (Original) The computer-implemented method of claim 12, wherein the first media player application is employed based at least in part on the received first message including therein a reference to the first media player application.

14. (Original) The computer-implemented method of claim 12, the operations further comprising:

obtaining the first media player application based on a determination that a second media player application is being employed.

15. (Original) The computer-implemented method of claim 12, wherein the first media player application obtained by retrieving the first media player application from a content provider associated with the referenced first piece of content.

16. (Original) The computer-implemented method of claim 12, wherein the presentation of the first piece of content loaded in the employed first media player application is controlled based further on the first command in the first format having been converted, from the second command in the second format, for inclusion in the received first message for recognition by the first media player application.

17. (Original) A content presentation device comprising:

a display;

at least one processor; and

at least one computer storage media storing computer-usable instructions that, when used by the at least one processor, cause the at least one processor to:

initialize a connection with a remote server device to facilitate an association between the content presentation device and a remote computing device, wherein the associated remote computing device is configured to send messages that include at least one command in a second format;

receive, from the remote server device, a first message that includes at least one command in a first format based on a second message in the second format sent from the associated remote computing device;

employ a first media player application operable to load a first piece of content referenced in the received first message; and

control a presentation of the first piece of content loaded in the employed first media player application based on a first command in the first format having been included in the received first message for recognition by the first media player application.

18. (Original) The content presentation device of claim 17, wherein a command in the first format is recognizable by the first media player application.

19. (Original) The content presentation device of claim 17, wherein the second message is sent to the remote server device.

20. (Original) The content presentation device of claim 18, wherein the first media player application is employed based at least in part on the received first message including therein a reference to the first media player application.

REMARKS

The Non-Final/Final Office Action mailed January 08, 2019 has been received and reviewed. Prior to the present communication, claims 1-20 were pending and claims 1-20 stand rejected. Reconsideration of the subject application is respectfully requested in view of the following remarks.

Rejections based on 35 U.S.C. § 102

Claims 1 and 4-20 are rejected under 35 U.S.C. § 102 as ostensibly being anticipated by U.S. Publication No. 2012/0130971 to Morris (hereinafter "Morris"). Applicant respectfully traverses this rejection. As the asserted reference fails to describe, expressly or inherently, each and every element recited in the rejected claims, Applicant respectfully traverses the rejection, as hereinafter set forth.

Applicant submits that Morris fails to describe, among other things, "*receiving, from the remote server device, a first message that includes* ***at least one command in a first format****, wherein the first message is received based at least in part on a second message including* ***at least one command in a second format*** *having been sent from the associated remote computing device*." The Office asserts that Morris purportedly describes this feature by citing steps 210 and 212 of FIG. 2 and ¶¶[0044]-[0045] of Morris.

Specifically, step 210 of FIG. 2 of Morris recites (from a perspective of a portable computing device):

> Receive user input associated with a particular media content item of the identified media content, the user input indicating selection of a send media option associated with the particular media content item.

More so, ¶[0044] of Morris recites (also from the perspective of the portable computing device):

> At 210, user input associated with a particular media content item of the identified media content may be received. The portable computing device may display a play option that is selectable to play the particular media content item on the portable computing device. The portable computing device may also, or in the alternative, display a send media option that is selectable to throw the particular media content item to a display device external to the portable computing device. When the user selects the play option, the portable computing device may receive the particular media content item from an application server. Alternately, *the portable computing device may receive at least one command that enables* <u>*the portable computing device*</u> *to access the network address of the particular media content item and to play the particular media content item on the portable computing device*. The portable computing device may access the particular media content item directly from the network address (i.e., without the application server).

Next, Step 212 of FIG. 2 of Morris recites (once again, from the perspective of the portable computing device):

> Generate a message in response to the user input, where the message includes information identifying a network address at the remote computing device corresponding to the particular media content item.

Finally, ¶[0045] of Morris recites (again, from the perspective of the portable computing device):

> When the user provides user input selecting the send media option, the portable computing device may generate a message in response to the user input, at 212. The message may include information identifying a network address at the remote computing device corresponding to the particular media content item. The network address may identify the particular media content in a format that is playable by the device to receive the particular media content item.

Applicant submits that Morris merely describes (1) that a *portable computing device* can generate a message that "may include information identifying a network address …

corresponding to the particular media content item" and (2) that ***the very same message*** generated by the *portable computing device* can be:

> … sent *from the portable computing device* to an application server that provides media content to a set top box device. The application server sends information to the set top box device that causes the set top box device to automatically play the particular media content item in response to the message.
>
> *See* Morris, ¶[0046] and step 214 of FIG. 2.

Applicant submits that Morris is completely silent with regard to "*receiving, from the remote server device, a first message that includes* ***at least one command*** ***<u>in a first format</u>****, wherein the first message is received based at least in part on a second message including* ***at least one command*** ***<u>in a second format</u>*** *having been sent from the associated remote computing device.*"

In fact, Morris never describes commands in different formats. At best, the only reference to a "format" is recited in ¶[0045] of Morris, which states that a generated message can include information identifying a network address, and that the "network address may identify the particular media *content in a format* that is playable by the device to receive the particular media content item."

Moreover, even if the Office interprets "user input selecting the send media option" as a command in a particular format, Applicant submits that the user input is not an equivalent of a generated message. Instead, as described by Morris, a message is generated *by a portable computing device based on* the "user input selecting the *send media option*." Yet, Morris still fails to describe that another message having a command in a different format is generated.

Finally, Morris consistently recites that the "message" is generated by a *portable computing device* that is "*sent from the portable computing device to an application server that provides media content to a set top box*." *See* Morris, ¶¶[0044]-[0046] and FIG. 2. Morris fails to describe, among other things, "receiving, *from the remote server device*, a first message that includes at least one command in a first format, wherein the first message is received based at least in part on a second message including at least one command in a second format *having been sent from the associated remote computing device*; employing a first media player application operable to load a first piece of content referenced in the received first message; and controlling a presentation of the first piece of content loaded in the employed first media player application *based on a first command in the first format having been included in the received first message* ***for recognition by the first media player application***," as similarly recited in the independent claims. Applicant notes that there is no mention of multiple messages having at least one command in different formats.

Applicant submits that no matter how unreasonably broad of an interpretation that the Office may take to read on the claims as presented, Morris further fails to describe that, particularly in light of the above, that Morris does not describe "controlling a presentation of the first piece of content loaded in the employed first media player application *based on a first command in the first format having been included in the received first message* ***for recognition by the first media player application***." In other words, even if a "user input" is considered a generated message, the user input does not include a first command in a first format for recognition by a first media player application. The user input is described as a "send media option" that causes a *portable computing device* to generate a message. The "send media option" itself simply cannot correspond to a first command in a first format *for recognition by a first*

media player application. At best, the "send media option" can correspond to a user input that causes a portable computing device to generate a message, one that is never described as being communicated between entities in different formats according to Morris.

For at least the reasons as detailed hereinabove, Morris fails to describe each element recited in independent claims 1, 12, and 17. Accordingly, withdrawal of the rejections of these claims is respectfully requested as well, for at least the above-cited reasons. Claims 1-20 are believed to be in condition for allowance and such favorable action is respectfully requested.

Rejections based on 35 U.S.C. § 103

Claims 2 and 3 were rejected under 35 U.S.C. § 103 as ostensibly being unpatentable over U.S. Publication No. 2012/0130971 to Morris (hereinafter "Morris"), in view of US. Publication No. 2009/0248802 to Mahajan et al. (hereinafter "Mahajan et al.)Applicant respectfully traverses this rejection. As the cited references, both alone or in combination, fail to teach or suggest all of the features of the independent claims, Applicant respectfully traverses this rejection, as hereinafter set forth.

As noted above, Morris fails to describe or teach each and every feature of the independent claims. Applicant submits that Mahajan is similarly deficient in this regard. The Office concedes on page 9 of the Office action that Morris "does not expressly disclose 'wherein a command in the second format is a universal command.'" The Office cites Mahajan as purportedly teaching "translating a platform specific media playback command into a generic or universal media playback command for transmission to a client."

First, Applicant submits that Mahajan does not teach *a remote server device*, *a remote computing device*, and the *one or more computing devices* associated with the remote computing device and performing the operations described in independent claim 1, as similarly

described in independent claims 12 and 17. Instead, Mahajan recites "[c]ollaboration sessions can provide a remoting experience between *a* client computer (hereinafter, "client") and *a* server computer (hereinafter, "server")" and that "[c]ollaboration can involve representing a portion, or all, of the server's graphical user-interface (GUI) on *the* client." *See* Mahajan, ¶[0011]. As such, by virtue of the described embodiments of Mahajan, Mahajan simply cannot teach one or more computing devices that perform operations including, among other things, receiving, *from the remote server device*, a first message that includes at least one command in a first format, wherein the first message is received based at least in part on a second message including at least one command in a second format having been sent *from the associated remote computing device*."

As noted above, Mahajan does not cure the deficiencies of Morris as described above in relation to "*receiving, from the remote server device, a first message that includes* ***at least one command in a first format****, wherein the first message is received based at least in part on a second message including* ***at least one command in a second format*** *having been sent from the associated remote computing device*," as the claims clearly require *a remote server device*, *a remote computing device*, and the *one or more computing devices* associated with the remote computing device performing the claimed operations.

As the applied references, both alone and in combination, do not teach or suggest all features of independent claims 1, 12, and 17, Applicant respectfully requests that the 35 U.S.C. § 103(a) rejection be withdrawn. As claims 2-11, 13-16, and 18-20 depend directly or indirectly from independent claims 1, 12, and 17, respectively, Applicant respectfully requests that the 35 U.S.C. § 103(a) rejection to claims 2-11, 13-16, and 18-20 be withdrawn for the same reasons as the independent claims from which they depend, and for the additional features recited therein.

CONCLUSION

For at least the reasons stated above, the pending claims are believed to be in condition for allowance. Applicant respectfully requests withdrawal of the pending rejections and allowance of the claims. If any issues remain that would prevent issuance of this application, the Examiner is urged to contact the undersigned – 816-474-6550 or kbae@shb.com (such communication via email is herein expressly granted) – to resolve the same. The fee for a two-month extension of time is submitted herewith by way of electronic payment. It is believed that no additional fee is due, however, the Commissioner is hereby authorized to charge any amount required to Deposit Account No. 19-2112 with reference to Attorney Matter No.. 41179.278581.

Respectfully submitted,

/ KEITH BAE /

Keith Bae
Reg. No. 64,633

KJBY/sw
SHOOK, HARDY & BACON L.L.P.
2555 Grand Blvd.
Kansas City, MO 64108-2613
816-474-6550 Telephone
816-421-5547 Fax

PTO/SB/06 (09-11)
Approved for use through 1/31/2014. OMB 0651-0032
U.S. Patent and Trademark Office; U.S. DEPARTMENT OF COMMERCE
Under the Paperwork Reduction Act of 1995, no persons are required to respond to a collection of information unless it displays a valid OMB control number.

PATENT APPLICATION FEE DETERMINATION RECORD Substitute for Form PTO-875	Application or Docket Number 15/687,249	Filing Date 08/25/2017	☐ To be Mailed

ENTITY: ☐ LARGE ☑ SMALL ☐ MICRO

APPLICATION AS FILED - PART I

FOR	(Column 1) NUMBER FILED	(Column 2) NUMBER EXTRA		RATE ($)	FEE ($)
☐ BASIC FEE (37 CFR 1.16(a), (b), or (c))	N/A	N/A		N/A	
☐ SEARCH FEE (37 CFR 1.16(k), (i), or (m))	N/A	N/A		N/A	
☐ EXAMINATION FEE (37 CFR 1.16(o), (p), or (q))	N/A	N/A		N/A	
TOTAL CLAIMS (37 CFR 1.16(i))	minus 20 =	*		x $40 =	
INDEPENDENT CLAIMS (37 CFR 1.16(h))	minus 3 =	*		x $210 =	
☐ APPLICATION SIZE FEE (37 CFR 1.16(s))	If the specification and drawings exceed 100 sheets of paper, the application size fee due is $310 ($155 for small entity) for each additional 50 sheets or fraction thereof. See 35 U.S.C. 41(a)(1)(G) and 37 CFR 1.16(s).				
☐ MULTIPLE DEPENDENT CLAIM PRESENT (37 CFR 1.16(j))					
* If the difference in column 1 is less than zero, enter "0" in column 2.				TOTAL	

APPLICATION AS AMENDED - PART II

AMENDMENT	05/09/2019	(Column 1) CLAIMS REMAINING AFTER AMENDMENT		(Column 2) HIGHEST NUMBER PREVIOUSLY PAID FOR	(Column 3) PRESENT EXTRA		RATE ($)	ADDITIONAL FEE ($)
	Total (37 CFR 1.16(i))	* 20	Minus	** 20	= 0		x $50 =	0
	Independent (37 CFR 1.16(h))	* 3	Minus	*** 3	= 0		x $230 =	0
	☐ Application Size Fee (37 CFR 1.16(s))							
	☐ FIRST PRESENTATION OF MULTIPLE DEPENDENT CLAIM (37 CFR 1.16(j))							
							TOTAL ADD'L FEE	0

AMENDMENT		(Column 1) CLAIMS REMAINING AFTER AMENDMENT		(Column 2) HIGHEST NUMBER PREVIOUSLY PAID FOR	(Column 3) PRESENT EXTRA		RATE ($)	ADDITIONAL FEE ($)
	Total (37 CFR 1.16(i))	*	Minus	**	=		x $0 =	
	Independent (37 CFR 1.16(h))	*	Minus	***	=		x $0 =	
	☐ Application Size Fee (37 CFR 1.16(s))							
	☐ FIRST PRESENTATION OF MULTIPLE DEPENDENT CLAIM (37 CFR 1.16(j))							
							TOTAL ADD'L FEE	

* If the entry in column 1 is less than the entry in column 2, write "0" in column 3.	LIE
** If the "Highest Number Previously Paid For" IN THIS SPACE is less than 20, enter "20".	/KIM R WATSON/
*** If the "Highest Number Previously Paid For" IN THIS SPACE is less than 3, enter "3".	
The "Highest Number Previously Paid For" (Total or Independent) is the highest number found in the appropriate box in column 1.	

This collection of information is required by 37 CFR 1.16. The information is required to obtain or retain a benefit by the public which is to file (and by the USPTO to process) an application. Confidentiality is governed by 35 U.S.C. 122 and 37 CFR 1.14. This collection is estimated to take 12 minutes to complete, including gathering, preparing, and submitting the completed application form to the USPTO. Time will vary depending upon the individual case. Any comments on the amount of time you require to complete this form and/or suggestions for reducing this burden, should be sent to the Chief Information Officer, U.S. Patent and Trademark Office, U.S. Department of Commerce, P.O. Box 1450, Alexandria, VA 22313-1450. DO NOT SEND FEES OR COMPLETED FORMS TO THIS ADDRESS. **SEND TO: Commissioner for Patents, P.O. Box 1450, Alexandria, VA 22313-1450.**

If you need assistance in completing the form, call 1-800-PTO-9199 and select option 2.

UNITED STATES PATENT AND TRADEMARK OFFICE

UNITED STATES DEPARTMENT OF COMMERCE
United States Patent and Trademark Office
Address: COMMISSIONER FOR PATENTS
P.O. Box 1450
Alexandria, Virginia 22313-1450
www.uspto.gov

APPLICATION NO.	FILING DATE	FIRST NAMED INVENTOR	ATTORNEY DOCKET NO.	CONFIRMATION NO.
15/687,249	08/25/2017	David Strober	TSTH.278581	4059

149550 7590 06/12/2019
SHOOK, HARDY & BACON LLP
(Touchstream Technologies, Inc.)
2555 GRAND BLVD
KANSAS CITY, MO 64108-2613

EXAMINER
HOPE, DARRIN

ART UNIT	PAPER NUMBER
2173	

NOTIFICATION DATE	DELIVERY MODE
06/12/2019	ELECTRONIC

Please find below and/or attached an Office communication concerning this application or proceeding.

The time period for reply, if any, is set in the attached communication.

Notice of the Office communication was sent electronically on above-indicated "Notification Date" to the following e-mail address(es):

IPDOCKET@SHB.COM
IPRCDKT@SHB.COM

PTOL-90A (Rev. 04/07)

Office Action Summary	Application No. 15/687,249	Applicant(s) Strober, David	
	Examiner DARRIN HOPE	Art Unit 2173	AIA (FITF) Status No

-- The MAILING DATE of this communication appears on the cover sheet with the correspondence address --

Period for Reply

A SHORTENED STATUTORY PERIOD FOR REPLY IS SET TO EXPIRE 3 MONTHS FROM THE MAILING DATE OF THIS COMMUNICATION.

- Extensions of time may be available under the provisions of 37 CFR 1.136(a). In no event, however, may a reply be timely filed after SIX (6) MONTHS from the mailing date of this communication.
- If NO period for reply is specified above, the maximum statutory period will apply and will expire SIX (6) MONTHS from the mailing date of this communication.
- Failure to reply within the set or extended period for reply will, by statute, cause the application to become ABANDONED (35 U.S.C. § 133). Any reply received by the Office later than three months after the mailing date of this communication, even if timely filed, may reduce any earned patent term adjustment. See 37 CFR 1.704(b).

Status

1)☑ Responsive to communication(s) filed on 9 May 2019.

☐ A declaration(s)/affidavit(s) under **37 CFR 1.130(b)** was/were filed on _____.

2a)☑ This action is **FINAL.** 2b) ☐ This action is non-final.

3)☐ An election was made by the applicant in response to a restriction requirement set forth during the interview on _____; the restriction requirement and election have been incorporated into this action.

4)☐ Since this application is in condition for allowance except for formal matters, prosecution as to the merits is closed in accordance with the practice under *Ex parte Quayle*, 1935 C.D. 11, 453 O.G. 213.

Disposition of Claims*

5) ☑ Claim(s) 1-20 is/are pending in the application.

5a) Of the above claim(s) _____ is/are withdrawn from consideration.

6) ☐ Claim(s) _____ is/are allowed.

7) ☑ Claim(s) 1-20 is/are rejected.

8) ☐ Claim(s) _____ is/are objected to.

9) ☐ Claim(s) _____ are subject to restriction and/or election requirement

* If any claims have been determined allowable, you may be eligible to benefit from the **Patent Prosecution Highway** program at a participating intellectual property office for the corresponding application. For more information, please see http://www.uspto.gov/patents/init_events/pph/index.jsp or send an inquiry to **PPHfeedback@uspto.gov.**

Application Papers

10)☐ The specification is objected to by the Examiner.

11)☑ The drawing(s) filed on 25 August 2017 is/are: a)☑ accepted or b)☐ objected to by the Examiner.

Applicant may not request that any objection to the drawing(s) be held in abeyance. See 37 CFR 1.85(a).

Replacement drawing sheet(s) including the correction is required if the drawing(s) is objected to. See 37 CFR 1.121(d).

Priority under 35 U.S.C. § 119

12)☐ Acknowledgment is made of a claim for foreign priority under 35 U.S.C. § 119(a)-(d) or (f).

Certified copies:

a)☐ All b)☐ Some** c)☐ None of the:

1.☐ Certified copies of the priority documents have been received.

2.☐ Certified copies of the priority documents have been received in Application No. _____.

3.☐ Copies of the certified copies of the priority documents have been received in this National Stage application from the International Bureau (PCT Rule 17.2(a)).

** See the attached detailed Office action for a list of the certified copies not received.

Attachment(s)

1) ☑ Notice of References Cited (PTO-892)

2) ☐ Information Disclosure Statement(s) (PTO/SB/08a and/or PTO/SB/08b) Paper No(s)/Mail Date _____.

3) ☐ Interview Summary (PTO-413) Paper No(s)/Mail Date _____.

4) ☐ Other: _____.

Notice of Pre-AIA or AIA Status

1. The present application is being examined under the pre-AIA first to invent provisions. This Office Action is responsive to the communications filed on 9 May 2019. Claims 1-20 are pending.

Claim Rejections - 35 USC § 102

2. The following is a quotation of the appropriate paragraphs of pre-AIA 35 U.S.C. 102 that form the basis for the rejections under this section made in this Office action:

> A person shall be entitled to a patent unless –
>
> (b) the invention was patented or described in a printed publication in this or a foreign country or in public use or on sale in this country, more than one year prior to the date of application for patent in the United States.

3. Claims 1 and 4-20 are rejected under pre-AIA 35 U.S.C. 102(b) as being anticipated by Morris (US 2012/0130971 A1).

4. Per claim 1, Morris discloses a non-transitory computer storage medium (paragraph [0013] storing computer-useable instructions that, when used by one or more computing devices, cause the one or more computing devices to perform operations for remotely presenting various types of content(Abstract), the operations comprising:

- initializing a connection with a remote server device to facilitate an association with a remote computing device(paragraphs [0027-0028]);
- receiving, from the remote server device, a first message that includes at least one command in a first format(e.g., Step 210 as shown in Fig. 2; paragraph [0044]), wherein the first message is received based at least in part on a second

message including at least one command in a second format having been sent from the associated remote computing device(e.g., Step 212 as shown in Fig. 2; paragraph [0026]; paragraphs [0033-34]; paragraph [0045]);

- employing a first media player application operable to load a first piece of content referenced in the received first message(e.g., Step 214 as shown in Fig. 2; paragraph [0046]; and paragraph [0068]); and
- controlling a presentation of the first piece of content loaded in the employed first media player application based on a first command in the first format having been included in the received first message for recognition by the first media player application (e.g., Fig. 4; paragraph [0010]; paragraph [0016]; paragraph [0026]; paragraph [0033]).

5. **Per claim 4,** Morris discloses the non-transitory computer storage medium of claim 1, wherein the second message is sent to the remote server device (e.g., Step 214 as shown in Fig. 2; paragraph [0046], "*At 214, the message is sent from the portable computing device to an application server that provides media content to a set top box device. The application server sends information to the set top box device that causes the set top box device to automatically play the particular media content item in response to the message. The method ends at 216.*").

6. **Per claim 5**, Morris discloses the non-transitory computer storage medium of claim 1, wherein the at least one command in the second format is converted into the at least one command in the first format based at least in part on the second message including therein a reference to the first piece of content (paragraph [0033]).

7. **Per claim 6**, Morris discloses the non-transitory computer storage medium of claim 1, wherein the at least one command in the second format is converted into the at least one command in the first format based at least in part on a reference to the first media player application having been included in the second message(paragraph [0033]).

8. **Per claim 7**, Morris discloses the non-transitory computer storage medium of claim 1, wherein the first media player application is employed based at least in part on the received first message including therein a reference to the first media player application (paragraph [0039]).

9. **Per claim 8**, Morris discloses the non-transitory computer storage medium of claim 1, wherein controlling the presentation includes an execution of the first command (paragraph [0010], "… *The application server generates at least one command executable by the media device coupled to the external display device that enables the media device to access the media content and to send the media content to the external display device when a format of the media content is playable by the media device...* "; paragraphs [0012-0015]).

10. **Per claim 9**, Morris discloses the non-transitory computer storage medium of claim 1, the operations further comprising: obtaining the first media player application based on a determination that the first media player application is not already being employed (e.g., Step 306 as shown in Fig. 3; paragraph [0052]).

11. **Per claim 10**, Morris discloses the non-transitory computer storage medium of claim 9, wherein the first media player application is obtained from a content provider that corresponds to the referenced first piece of content (paragraph [0029]).

12. **Per claim 11**, Morris discloses the non-transitory computer storage medium of claim 1, wherein the connection with the remote server device is maintained, for at least a duration that the first media player application is being employed, to facilitate a change from the first media player application to a second media player application operable to load a second piece of content referenced in a second message received from the remote server device (paragraphs [0025-0026]). Morris teaches a throw application 132 wherein the connection with the remote server device is maintained, for at least a duration that the first media player application is being employed, to facilitate a change from the first media player application to a second media player application operable to load a second piece of content referenced in a second message received from the remote server device

13. **Per claim 12**, Morris discloses a computer-implemented method for remotely presenting various types of content (Abstract), comprising:

- initializing, by a content presentation device, a connection with a remote server device to facilitate an association between the content presentation device and a remote computing device(paragraphs [0027-0028]);
- receiving, by the content presentation device and from the remote server device, a first message that includes at least one command in a first format(e.g., Step 210 as shown in Fig. 2; paragraph [0044]), wherein the first message is received based at least in part on a second message including at least one command in a second format having been sent from the remote computing device associated with the content presentation device(e.g., Step 212 as shown in Fig. 2; paragraph [0045]);

- employing, while the connection with the remote server device is maintained, a first media player application operable to load a first piece of content based at least in part on the first piece of content being referenced in the received first message(e.g., Step 214 as shown in Fig. 2; paragraph [0046]); and
- controlling, by the content presentation device, a presentation of the first piece of content loaded in the employed first media player application based on a first command in the first format having been included in the received first message for recognition by the first media player application(e.g., Fig. 4; paragraph [0010]; paragraph [0016]; paragraph [0026]; paragraph [0033]).

14. **Per claim 13**, Morris disclose the computer-implemented method of claim 12, wherein the first media player application is employed based at least in part on the received first message including therein a reference to the first media player application(paragraph [0039]).

15. **Per claim 14**, Morris disclose the computer-implemented method of claim 12, the operations further obtaining the first media player application based on a determination that a second media player application is being employed(e.g., Step 306 as shown in Fig. 3; paragraph [0052]).

16. **Per claim 15**, Morris discloses the computer-implemented method of claim 12, wherein the first media player application obtained by retrieving the first media player application from a content provider associated with the referenced first piece of content (paragraphs [0025-0026]).

17. **Per claim 16**, Morris discloses the computer-implemented method of claim 12, wherein the presentation of the first piece of content loaded in the employed first media

player application is controlled based further on the first command in the first format having been converted, from the second command in the second format, for inclusion in the received first message for recognition by the first media player application (paragraph [0033]).

18. **Per claim 17**, Morris discloses a content presentation device (e.g., media device 108 as shown in Fig. 1; Abstract); comprising:

- a display (e.g., display device 104 as shown in Fig. 1);
- at least one processor(e.g., processor 154 as shown in Fig. 1); and
- at least one computer storage media (e.g., memory 162 as shown in Fig. 1) storing computer-usable instructions that, when used by the at least one processor, cause the at least one processor to:
- initialize a connection with a remote server device to facilitate an association between the content presentation device and a remote computing device, wherein the associated remote computing device is configured to send messages that include at least one command in a second format(paragraphs [0027-0028]);
- receive, from the remote server device, a first message that includes at least one command in a first format based on a second message in the second format sent from the associated remote computing device(e.g., Step 212 as shown in Fig. 2; paragraph [0045]);
- employ a first media player application operable to load a first piece of content referenced in the received first message(e.g., Step 214 as shown in Fig. 2; paragraph [0046]); and

- control a presentation of the first piece of content loaded in the employed first media player application based on a first command in the first format having been included in the received first message for recognition by the first media player application(e.g., Fig. 4; paragraph [0010]; paragraph [0016]; paragraph [0026]; paragraph [0033]).

19. **Per claim 18**, Morris discloses the content presentation device of claim 17, wherein a command in the first format is recognizable by the first media player application (paragraph [0034]).

20. **Per claim 19**, Morris discloses the content presentation device of claim 17, wherein the second message is sent to the remote server device(e.g., Step 214 as shown in Fig. 2; paragraph [0046], "*At 214, the message is sent from the portable computing device to an application server that provides media content to a set top box device. The application server sends information to the set top box device that causes the set top box device to automatically play the particular media content item in response to the message. The method ends at 216.*").

21. **Per claim 20**, Morris discloses the content presentation device of claim, wherein the first media player application is employed based at least in part on the received first message including therein a reference to the first media player application (paragraph [0033]).

Claim Rejections - 35 USC § 103

22. The following is a quotation of pre-AIA 35 U.S.C. 103(a) which forms the basis for all obviousness rejections set forth in this Office action:

> (a) A patent may not be obtained though the invention is not identically disclosed or described as set forth in section 102, if the differences between the subject matter sought to be patented and the prior art are such that the subject matter as a whole would have been obvious at the time the invention was made to a person having ordinary skill in the art to which said subject matter pertains. Patentability shall not be negatived by the manner in which the invention was made.

23. The factual inquiries set forth in *Graham v. John Deere Co.*, 383 U.S. 1, 148 USPQ 459 (1966), that are applied for establishing a background for determining obviousness under pre-AIA 35 U.S.C. 103(a) are summarized as follows:

1. Determining the scope and contents of the prior art.
2. Ascertaining the differences between the prior art and the claims at issue.
3. Resolving the level of ordinary skill in the pertinent art.
4. Considering objective evidence present in the application indicating obviousness or nonobviousness.

24. Claims 2 and 3 are rejected under pre-AIA 35 U.S.C. 103(a) as being unpatentable over Morris (US 2012/0130971 A1) in view of Mahajan et al. (Hereinafter, Mahajan, US 2009/0248802 A1).

25. Per claim 2, Morris discloses the non-transitory computer storage medium of claim 1, but does not expressly disclose wherein a command in the second format is a universal command.

26. Mahajan discloses wherein a command in the second format is a universal command (paragraphs [0013-0014; paragraphs [0022], [0024], [0036], [0038], [0040], [0042]). Mahajan teaches translating a platform specific media playback command into a generic or universal media playback command for transmission to a client.

27. At the time of the invention, it would have been obvious to a person of ordinary skill in the art to use the Mahajan systems and methods for managing multimedia

operations in remote sessions in Morris' media content playing device to improve the device with reasonable expectation that this would result in a media content playing device that could allow playback of media on different platforms. This method for improving the media content playing device of Morris was within the ordinary ability of one of ordinary skill in the art based on the teachings of Mahajan.

28. Therefore, it would have been obvious to one of ordinary skill in the art to combine the teachings of Morris and Mahajan to obtain the invention as specified in claim 2

29. **Per claim 3**, Morris and Mahajan disclose the non-transitory computer storage medium of claim 2, wherein the first format is different than the second format (Mahajan, paragraph [0061]).

Response to Arguments

30. Applicant's arguments filed 9 May 2019 have been fully considered but they are not persuasive.

Rejections based on 35 U.S.C. § 102

31. On page 1 of Applicant's Remarks, Applicant argues that Morris fails to describe, among other things, "receiving, from the remote server device, a first message that includes at least one command in a first format, wherein the first message is received based at least in part on a second message including at least one command in a second format having been sent from the associated remote computing device."

32. The Examiner disagrees since Morris does disclose "receiving, from the remote server device, a first message that includes at least one command in a first format , wherein the first message is received based at least in part on a second

message including at least one command in a second format having been sent from the associated remote computing device" (paragraph [0026]; paragraphs [0033-34]; and paragraph [0068]). Morris teaches a portable computing device 102 receiving, from the remote server device (i.e., application server 106), a first message that includes at least one command in an extensible markup language (XML) format, wherein the first message is received based at least in part on a second message including at least one command in a second format having been sent from the associated remote computing device. The first message is received on the basis of the portable device being able to play a particular content in a particular format. Otherwise, a message is sent to transcode the content.

33. For at least the reasons as detailed hereinabove, Morris does describe each element recited in independent claims 1, 12, and 17. Accordingly, the rejections of these claims are maintained, for at least the above-cited reasons. Claims 1-20 are, therefore, not in condition for allowance.

Rejections based on 35 U.S.C. § 103

34. In regards to claims 2 and 3, the Applicant argues that Mahajan does not cure the deficiencies of Morris since Mahajan does not disclose "receiving, from the remote server device, a first message that includes at least one command in a first format, wherein the first message is received based at least in part on a second message including at least one command in a second format having been sent from the associated remote computing device."

35. The Examiner disagrees since Mahajan was not relied upon to disclose "receiving, from the remote server device, a first message that includes at least one

command in a first format, wherein the first message is received based at least in part on a second message including at least one command in a second format having been sent from the associated remote computing device." Morris discloses receiving, from the remote server device, a first message that includes at least one command in a first format(e.g., Step 210 as shown in Fig. 2; paragraph [0044]), wherein the first message is received based at least in part on a second message including at least one command in a second format having been sent from the associated remote computing device(e.g., Step 212 as shown in Fig. 2; paragraph [0026]; paragraphs [0033-34]; paragraph [0045]) as discussed above.

36. In view of the foregoing, the rejection of claims 1-20 is maintained.

Conclusion

37. The prior art made of record and not relied upon is considered pertinent to applicant's disclosure.

Pahlavan et al. (US 9185171 B2) - Method and system of specifying application user interface of a remote client device

38. **THIS ACTION IS MADE FINAL.** Applicant is reminded of the extension of time policy as set forth in 37 CFR 1.136(a).

A shortened statutory period for reply to this final action is set to expire THREE MONTHS from the mailing date of this action. In the event a first reply is filed within TWO MONTHS of the mailing date of this final action and the advisory action is not mailed until after the end of the THREE-MONTH shortened statutory period, then the shortened statutory period will expire on the date the advisory action is mailed, and any

extension fee pursuant to 37 CFR 1.136(a) will be calculated from the mailing date of the advisory action. In no event, however, will the statutory period for reply expire later than SIX MONTHS from the mailing date of this final action.

1. Any inquiry concerning this communication or earlier communications from the examiner should be directed to DARRIN HOPE whose telephone number is (571)270-5079. The examiner can normally be reached on Mon-Thr - 7-4:30, Fri - 7-3:30, Alt. Fri Off.

Examiner interviews are available via telephone, in-person, and video conferencing using a USPTO supplied web-based collaboration tool. To schedule an interview, applicant is encouraged to use the USPTO Automated Interview Request (AIR) at http://www.uspto.gov/interviewpractice.

If attempts to reach the examiner by telephone are unsuccessful, the examiner's supervisor, Kieu D Vu can be reached on (571)272-4057. The fax phone number for the organization where this application or proceeding is assigned is 571-273-8300.

Information regarding the status of an application may be obtained from the Patent Application Information Retrieval (PAIR) system. Status information for published applications may be obtained from either Private PAIR or Public PAIR. Status information for unpublished applications is available through Private PAIR only. For more information about the PAIR system, see http://pair-direct.uspto.gov. Should you have questions on access to the Private PAIR system, contact the Electronic Business Center (EBC) at 866-217-9197 (toll-free). If you would like assistance from a USPTO Customer Service Representative or access to the automated information system, call 800-786-9199 (IN USA OR CANADA) or 571-272-1000.

DARRIN HOPE
Examiner
Art Unit 2173

/TADESSE HAILU/
Primary Examiner, Art Unit 2173

Notice of References Cited	Application/Control No. 15/687,249	Applicant(s)/Patent Under Reexamination Strober, David	
	Examiner DARRIN HOPE	Art Unit 2173	Page 1 of 1

U.S. PATENT DOCUMENTS

*		Document Number Country Code-Number-Kind Code	Date MM-YYYY	Name	CPC Classification	US Classification
*	A	US-9185171-B2	11-2015	Pahlavan; Babak	H04L63/08	1/1
	B					
	C					
	D					
	E					
	F					
	G					
	H					
	I					
	J					
	K					
	L					
	M					

FOREIGN PATENT DOCUMENTS

*		Document Number Country Code-Number-Kind Code	Date MM-YYYY	Country	Name	CPC Classification
	N					
	O					
	P					
	Q					
	R					
	S					
	T					

NON-PATENT DOCUMENTS

*		Include as applicable: Author, Title Date, Publisher, Edition or Volume, Pertinent Pages)
	U	
	V	
	W	
	X	

*A copy of this reference is not being furnished with this Office action. (See MPEP § 707.05(a).)
Dates in MM-YYYY format are publication dates. Classifications may be US or foreign.

Search Notes	Application/Control No.	Applicant(s)/Patent Under Reexamination
	15/687,249	Strober, David
	Examiner	**Art Unit**
	DARRIN HOPE	2173

CPC - Searched*		
Symbol	**Date**	**Examiner**

CPC Combination Sets - Searched*		
Symbol	**Date**	**Examiner**
G06F17/30846 G06F9/452 G06F17/30864	12/26/2018	DH

US Classification - Searched*			
Class	**Subclass**	**Date**	**Examiner**
715	716	12/26/2018	DH

* See search history printout included with this form or the SEARCH NOTES box below to determine the scope of the search.

Search Notes		
Search Notes	**Date**	**Examiner**
EAST	12/26/2018	DH
EAST	05/30/2019	DH

Interference Search			
US Class/CPC Symbol	**US Subclass/CPC Group**	**Date**	**Examiner**

Index of Claims	Application/Control No.	Applicant(s)/Patent Under Reexamination
	15/687,249	Strober, David
	Examiner	**Art Unit**
	DARRIN HOPE	2173

✓	Rejected	-	Cancelled	N	Non-Elected	A	Appeal
=	Allowed	÷	Restricted	I	Interference	O	Objected

CLAIMS

☐ Claims renumbered in the same order as presented by applicant ☐ CPA ☐ T.D. ☐ R.1.47

CLAIM		DATE								
Final	Original	12/26/2018	05/30/2019							
	1	✓	✓							
	2	✓	✓							
	3	✓	✓							
	4	✓	✓							
	5	✓	✓							
	6	✓	✓							
	7	✓	✓							
	8	✓	✓							
	9	✓	✓							
	10	✓	✓							
	11	✓	✓							
	12	✓	✓							
	13	✓	✓							
	14	✓	✓							
	15	✓	✓							
	16	✓	✓							
	17	✓	✓							
	18	✓	✓							
	19	✓	✓							
	20	✓	✓							

EAST Search History

EAST Search History (Prior Art)

Ref #	Hits	Search Query	DBs	Default Operator	Plurals	Time Stamp
L1	2049	(G06F17/30846 G06F9/452 G06F17/30864).cpc.	US-PGPUB; USPAT	OR	OFF	2019/05/30 10:55
L2	480	(receiv$3 receipt) with message with command with (first and second) with server	US-PGPUB; USPAT	OR	OFF	2019/05/30 10:57
L3	32	L1 and L2	US-PGPUB; USPAT	OR	OFF	2019/05/30 10:57
L4	4	((("TOUCHSTREAM") near3 ("TECHNOLOGIES") near3 ("INC"))).AS,AANM.	USPAT	OR	OFF	2019/05/30 10:58
L5	6	((("Strober") near3 ("David"))).INV.	US-PGPUB	OR	OFF	2019/05/30 10:58
L6	5466	(715/716).ccls.	US-PGPUB; USPAT; USOCR; DERWENT	OR	OFF	2019/05/30 11:00
L7	16	L1 and L6	US-PGPUB; USPAT; USOCR; DERWENT	OR	OFF	2019/05/30 11:00
L8	200	("8880491" "20120130971" "9338494" "20120210371" "8621507" "20120210350" "9924229" "9258613" "9628842" "20120210344" "20120117586" "20120112986" "9426510" "20120210378" "9264758" "8510769" "20120210365" "8949376" "9521453" "9648380" "8789086" "10097880" "8704854" "20120210343" "8984626" "20110066942" "20110064378" "20100180010" "20110063317" "20110064385" "20110064377" "20080189295" "20110067099" "20120117588" "20110066944" "20110066663" "20110067066" "9253222" "20110066489" "8660545" "20100235443" "10091345" "20120210226" "7917932" "20060008256" "20080209021" "20090156181" "20080155470" "20060253874" "8965920" "20090061841" "20110064386" "8265612" "8417096" "8661494" "8868785" "20080155057" "20080212945" "8175638" "20080212944" "20120011558" "20060265427" "20110137976" "20120210225" "20080176540" "20080273077" "20100153410" "20060224761"	US-PGPUB; USPAT	OR	OFF	2019/05/30 11:01

		"20100281108" "9633656" "8904455" "20110088057" "20110135283" "8473976" "20110170842" "20130272681" "8682145" "20040133657" "20110145581" "20110131180" "20120117590" "20060259930" "20080160909" "20060173974" "20070157072" "20120210238" "8897737" "20080059533" "8271341" "8108342" "8359612" "20080214215" "9092519" "20110289108" "20080209075" "20080175569" "20080201751" "20020140855" "20020040475" "20080133736" "20090156179" "20100325238" "20080180401" "7102688" "8468130" "20060062544" "20080187115" "8160495" "20130022185" "20090069915" "20120323349" "20080305738" "20130024539" "20100325239" "20040133914" "20090106200" "7966638" "20060248557" "20130022335" "20080175566" "20080160908" "20080184317" "20080184359" "20090304344" "20080182510" "20080182508" "9055269" "20060291506" "20110197237" "20080183840" "20080182509" "20060184431" "8700739" "20060253782" "20080201375" "20080162655" "20080163302" "20090113315" "9009589" "8832564" "20040086120" "20130097302" "20080010372" "20100064332" "20110004517" "7881656" "20080155129" "20080201376" "8813127" "8099455" "9490998" "7711605" "20080244681" "20040244031" "20080177860" "8555318" "20090058822" "8606948" "20090304346" "20080178238" "6587127" "20120005311" "9275054" "20110119637" "8090768" "8886759" "20080276279" "20080155634" "20100235762" "20080160910" "20100287070" "8112032" "20060059095" "20090049156" "20090030978" "20080141307" "8818179" "8556722" "20100042749" "20120210245" "8107977" "8271889" "20110009051" "20070136778" "20050076092" "20100042499" "20080155109" "8290929" "20040165006" "20070294096" "20060026162" "20070265073" "20090011780" "20100281042" "7650361" "20070288836" "8634703" "20120079126" "9009758" "9563702").PN.				
L9	200	("8046672" "20090112839" "7451177" "20110231867" "9178923" "8281001" "20120254929" "20100049835" "20090158136" "8751672" "20080256129" "20110158610" "8521857" "20080189752" "20100107201" "20120131098" "20040044725" "20090069038" "20110185378" "8695030" "20100146411" "20120210352" "20050177853" "20090177736" "20070299976" "20110060994" "20030110503" "8407755"	US-PGPUB; USPAT	OR	OFF	2019/05/30 11:01

		"20040133908" "9065683" "8327403" "7956848" "20070204011" "8176121" "7076495" "20110150432" "20120210377" "20060206581" "20120059884" "20020156909" "8350971" "20020140571" "8204485" "20100161729" "7376414" "8402498" "8230341" "20020129089" "20080281689" RE44298 "20050208930" "9113195" "8407303" "7899808" "6476825" "20080229335" "8246454" "20040224723" "9769414" "20080098433" "9100726" "8930561" "8001471" "20100273553" "20020161794" "20100131848" "9405710" "20090019061" "20020169540" "8244315" "20090286560" "8315608" "20100333032" "20020087887" "20110087348" "8677402" "8707361" "9794647" "20060041926" "20100085857" "8301784" "7975062" "7224260" "8886710" "20080028023" "20120036543" "20120124625" "20060276230" "20090280792" "20070199014" "7870272" "7840631" "20100016080" "8769578" "7574723" "20090125609" "20100131978" "20070204057" "9137576" "20100333135" "20090112874" "20100333151" "20050208929" "8793305" "7426532" "20020151327" "20100318357" "8316052" "8094794" "8775647" "8266173" "20120117587" "20050080496" "20120079095" "6882299" "20080133529" "20120131609" "20080148328" "7890957" "20110289460" "20100333136" "20080066080" "9003500" "7607582" "20100293598" "20090100065" "20040226048" "20100042747" "20110099157" "20120030701" "20070198744" "20080216153" "6938101" "20100070925" "20100306402" "20090113301" "20090047000" "20090254950" "8918645" "20030135859" "20050088333" "8467275" "20050216606" "20090156170" "20120078997" "20020162112" "20090156183" "20110320476" "20020143805" "9201627" "7784065" "20020161780" "8457661" "20140032636" "20120079276" "20090259711" "20070264982" "8090694" "20070006255" "8359351" "20100306815" "7506019" "20050091359" "20100057583" "7689510" "20100299761" "9271022" "6104334" "7475155" "20060136572" "8185477" "8676034" "20080140664" "7775886" "7962097" "8214422" "20050198353" "20060242259" "20070174624" "6769028" "8001236" "20100235891" "7716224" "20080243828" "20080243788" "20030233349" "7376696" "20070250194" "8077263" "9201668" "7702279" "8713605" "8954444" "20080124055" "20070250597" "20050210101" "7653691" "20120210366" "20060075429" "8464302").PN.				
L10	200	("20100169347" "8943169" "20060161635"	US-	OR	OFF	2019/05/30

		"7143214" "8583758" "20070198633" "20080098426" "20120206317" "8792429" "8874244" "20060176271" "8150934" "20120263440" "9066199" "20080195698" "8381310" "20070204003" "8249559" "20060136577" "20030014630" "20110167447" "20120052941" "20110239142" "8126200" "20100205628" "8234282" "7565294" "20060253525" "20030132953" "20070168543" "20100185306" "9219734" "8291028" "20080114861" "8180645" "20120221645" "8887221" "20110163939" "7046161" "9525838" "8656424" "8875180" "20130166423" "20110247035" "20100169977" "8171520" "8977710" "20090249222" "20110321071" "20120075529" "20060004834" "8150911" "8374923" "20120079606" "20110087603" "8990215" "20110107225" "20040044723" "7873578" "8316389" "8209396" "20090089838" "20120039467" "20110069936" "9479737" "20090234939" "9716774" "8812850" "20070016865" "9391808" "20090182806" "20090182805" "20090281874" "20070124769" "20100017821" "9374605" "20080134237" "20120023408" "7779097" "20080290987" "20070169115" "8860804" "6182094" "6591247" "6834294" "20090177303" "20070250195" "20130047083" "20080109298" "20090319599" "20120222061" "20120124475" "20110225066" "7725102" "20100169939" "20030141987" "20090234955" "8510847" "9067150" "20050177745" "8677392" "20110029604" "20080097632" "7996869" "9167208" "20060184968" "20060094360" "8079055" "20070121651" "20090024943" "20070005727" "8768307" "20080294674" "8826312" "20080229352" "8494907" "20100169942" "7734724" "8073380" "8122464" "20060085825" "8798445" "7054863" "8667163" "7895633" "8112504" "7519681" "20050177624" "6925495" "20080021775" "20080307477" "20080243694" "20120151525" "8577420" "20080276266" "20060174026" "8667546" "20110211813" "8503861" "8621338" "20090172758" "20060048201" "20080107102" "9356982" "9078043" "20100144329" "8036418" "20060259589" "20030043191" "20030182139" "20110055218" "20090198357" "8352576" "20110265111" "8806537" "9786159" "20060159109" "8588590" "7536708" "20090198358" "7433922" "20100208069" "20070277201" "20050058260" "20090052863" "20090043692" "20100031306" "20020087661" "20120072270" "8561114" "20050204309" "20070005450" "8490127" "8943122" "20090248182" "20090157792" "20090029685" "20080320508"	PGPUB; USPAT			11:01

		"20030005429" "20080077483" "8352616" "7512882" "20040044724" "5732216" "9832532" "7519911" "20120042309" "20080256485" "6199076" "20090100477" "9883233" "20090064038" "20070288970" "20080205205" "20070073725" "20100235328" "20100036908" "8401681" "10080063" "20090172747").PN.				
L11	200	("8015263" "20120079080" "8978147" "20100071076" "20120124171" "8015491" "20110035668" "20060271977" "20060129458" "20100008586" "20020078144" "20100299701" "20060248570" "20100138761" "7721301" "9628746" "20030151618" "20110135271" "20050286497" "20080155616" "20070067309" "8213924" "20030018971" "20100274858" "20020069113" "9700791" "20110138429" "20080195466" "7454515" "20100031366" "20100175093" "8081994" "7920901" "20100106852" "20020161775" "20090172726" "8296808" "20080005130" "20060041639" "20110119600" "20070183741" "8700005" "20050251749" "8543095" "6968364" "20060235700" "20080195692" "20100064055" "20100041457" "8438589" "7917439" "8155582" "8671434" "20060068919" "20090077584" "7979881" "20110153048" "20110131604" "20080141150" "20060123053" "20120023521" "9152300" "20090070438" "20110151905" "20090186700" "20050149872" "20110191677" "20090099858" "9712582" "6829368" "20070124737" "20100082567" "8601089" "20110317634" "7069310" "20110214147" "8204793" "8656040" "7809802" "8452775" "8103957" "20090177742" "20110289073" "9626363" "20070028111" "20110185312" "20050080878" "8135865" "20040215741" "20080222546" "8469813" "20100082136" "20040148362" "8611919" "20120054793" "20110320963" "8429707" "20030140090" "8271549" "8438287" "20070204115" "8458749" "9864958" "20060259588" "6956833" "20100138298" "20060041640" "8990104" "8832754" "20120023520" "9124650" "20120173383" "20100191608" "20060015649" "20070055743" "9369776" "20100299417" "9204193" "9055315" "8799758" "20020007418" "20040171376" "20070073726" "9509796" "7814148" "8931010" "8122004" "8437744" "20090117890" "20110283311" "20050267994" "7797242" "20090094511" "20080293450" "20070189708" "20050273827" "8739294" "8072956" "20040177376" "9706160" "6603488" "20090220216" "10057631" "20050108769" "9116340" "8156176" "8738639" "8149701" "7509178" "20080155062" "8539093" "20060265329" "20080117922" "20080140523" "9414101" "9521174"	US-PGPUB; USPAT	OR	OFF	2019/05/30 11:01

		"20070209005" "20080244637" "8069232" "8694531" "20100278321" "8682262" "20110093892" "20100037264" "20080046919" "8417258" "7848959" "8051453" "20100251136" "20090228125" "20070016922" "20110184862" "7080030" "8689142" "7917645" "20120036549" "20100222090" "20050278435" "8965807" "20100150395" "20090099912" "9483755" "9519940" "20110137729" "20070073728" "20070048714" "7921309" "20040172481" "8526928" "20070245882" "9258326" "20120019400" "20050136949" "20080155663" "20100100636" "20080098432" "20120011553" "20100296654" "7155436" "6055560").PN.				
L12	200	("7593576" "20050265701" "6288716" "20110119149" "20080082381" "20090204639" "8380878" "8341513" "7627341" "20110164175" "20090043657" "7516213" "8606314" "20070073727" "20100138746" "8826145" "9135363" "8086226" "8495686" "8621541" "8589991" "20110138331" "8046802" "20100145809" "7818321" "20110035462" "20030229899" "9078082" "7873742" "7724716" "20110138415" "8631436" "20090017827" "20060208074" "20080189766" "20060179129" "20080215452" "20120096092" "8117062" "20050198574" "20050021478" "20110137728" "20110131600" "20110082761" "9824389" "20060159366" "7725360" "8856118" "20090052870" "20100011299" "7707601" "20060127037" "7487112" "20070100904" "20110219421" "7769819" "20120036584" "9171851" "20020091848" "20070239546" "20050091268" "20090102983" "20050210120" "20050108519" "20070250400" "20110218044" "8707366" "20100169464" "7792920" "20100313250" "7917933" "20100118200" "20050182828" "7689613" "8230466" "20070173266" "20070016653" "20030023505" "20050267883" "8291320" "8433611" "5721827" "20020124100" "6198479" "20090006644" "20120162537" "20070294292" "9933937" "20110179453" "20090318192" "9032296" "8868640" "7693992" "8909695" "7480703" "20080094400" "20080244010" "8375208" "7949722" "20090210493" "20080250431" "20080221909" "20090249418" "20090099859" "8095424" "20060182424" "6735628" "20050193094" "20070118426" "8341210" "20110131518" "20080071834" "8660530" "20050055730" "20060193606" "8656446" "20110181780" "20090172108" "7178106" "20100198704" "7673315" "20110170837" "20090144624" "7472175" "20070155306" "20050055717" "20110185036" "9886599" "7337147" "8667152" "20060031551" "20110214045" "8060625" "20100257458" "20100138297"	US-PGPUB; USPAT	OR	OFF	2019/05/30 11:01

		"20070162939" "20050278729" "20050193322" "20110289317" "8621025" "20090043870" "20080215507" "20050033855" "20080065974" "20070291710" "20090099836" "7426329" "8086575" "20010038392" "20070061845" "8244179" "20070061835" "20080200161" "20110126236" "20090063645" "20070174774" "20030122966" "8106742" "7487441" "20080147772" "20060085351" "7500007" "20050060756" "20040177375" "8621509" "20110026692" "20120079119" "20020069308" "8220708" "8977294" "8825468" "20070067315" "7920856" "20100087179" "20090006375" "20110269424" "8190692" "7988042" "20020169797" "20110197159" "20040025185" "9128961" "20050086696" "8176431" "20100241475" "20080027827" "20030065805" "20100070565" "20080320391" "8375131" "20020147699" "7578002" "20110113354" "20070050734" "8291459" "20090228807" "20110087971" "20080254832" "20120078952" "20080317441").PN.				
L13	200	("20110225417" "7966552" "20020107802" "8176506" "20110013885" "8935300" "20110289414" "9047516" "7756545" "7735012" "20170149600" "6944632" "7194235" "8463869" "20040103297" "20040068536" "8769297" "9635066" "20100299712" "8584171" "9681105" "7693902" "20110040894" "7574691" "20110181496" "20110078174" "20100161818" "20050039135" "7130616" "8498628" "7925299" "20090327449" "7356575" "20100279673" "8161411" "9015179" "20090018898" "20090049074" "7793823" "9277156" "20090228578" "20060064720" "9602512" "8424041" "8650283" "20100234052" "20110125765" "20170228789" "9087182" "8108797" "20040128514" "20010031066" "20100235476" "20110265119" "8572257" "20100255890" "7812854" "9037999" "20060149813" "20050165849" "7720686" "8451232" "9178946" "20090228544" "7644172" "6792452" "8565740" "20060068911" "20070005504" "20130014169" "8041775" "20060156353" "20080234000" "8555395" "7519073" "9326016" "20080097984" "7721103" "20120130834" "20110153849" "20070124772" "7525975" "8682750" "7571458" "8607287" "20080034081" "20090005080" "20080177713" "9201882" "7734684" "20060080702" "8589779" "20080141303" "7308487" "20110287757" "20060265477" "8265862" "6704864" "20110016488" "20070055997" "20090204885" "20080133551" "20100134299" "7908467" "20090125935" "20050266884" "8554938" "9077859" "8898708" "7886318" "8166139"	US-PGPUB; USPAT	OR	OFF	2019/05/30 11:01

		"20060080408" "20070271366" "8843589" "20060242275" "20090070673" "20060259436" "20100297964" "20110197236" "8310985" "8990119" "7593982" "7535465" "6609105" "20090094512" "20090054092" "20070124779" "6892230" "20020068558" "20070124201" "20050010963" "20100211636" "20030220835" "20120110126" "20100043046" "8078751" "8943539" "20040068756" "20100332994" "20110016503" "20090156251" "9826046" "20090164641" "8190754" "20040088731" "8862762" "7558838" "8875213" "20100199219" "9277292" "20080004952" "8516125" "20060085349" "20110311095" "8060631" "7218243" "8621531" "8341527" "7849160" "20100094726" "20070048713" "8544046" "8615164" "7797431" "7881658" "9118934" "20080242280" "20080281805" "20120081299" "9167301" "8245142" "20080155006" "20080281943" "20080028223" "8205081" "20100138884" "20080092045" "7237104" "20110040658" "9178954" "20080148310" "20090150553" "8898715" "20060259429" "20120131626" "20110282721" "8214338" "20090063660" "7856225" "20040033821" "9516357" "20120042385" "8954597" "7308644" "8023935" "20110040615" "20070288985" "20100145861" "8635196" "20040205811").PN.				
L14	200	("20090094341" "20110106910" "20050172309" "20100058220" "7937450" "7865366" "7840977" "20080275864" "20120062471" "6856990" "20120054616" "20040268451" "20060253417" "20090144801" "20040254887" "20080271066" "20100011135" "20060085835" "9100702" "20090177966" "7751807" "8607263" "8336077" "8392959" "9524072" "6243707" "9083791" "9990439" "20030140121" "20030221127" "8151259" "9584563" "20120084653" "7787749" "20070157234" "20040019497" "20050091311" "7739596" "20110145721" "20120226912" "20080033918" "20120253937" "7761898" "7945616" "8776122" "20070043766" "20080209329" "7996496" "7925300" "20060222322" "20040175097" "7647430" "7860531" "8561202" "20100228880" "7383229" "20030103088" "20070079352" "20020033844" "20080181575" "7269634" "20050044189" "20110179139" "20120005702" "20030189509" "9582507" "8413056" "8713304" "20070157240" "9021522" "6725281" "20040248561" "9351048" "7269854" "7602756" "8407609" "20050060527" "8893203" "8063923" "20070207795" "8458740" "20080165143" "20030145338" "9269086" "20090271831" "7379661" "20040174905" "20090100182" "6884172" "20100081472" "7894703"	US-PGPUB; USPAT	OR	OFF	2019/05/30 11:01

		"20080194276" "8005345" "20050210391" "20100169410" "7149208" "20110021219" "8707347" "9219729" "20060117344" "20100279735" "7953872" "8910218" "20090171715" "8219911" "20050114468" "9639619" "20090019492" "7694235" "8112815" "20100186034" "20120066338" "9253205" "8025572" "20020035621" "20080016196" "20070124416" "8315950" "7039858" "7219308" "20070260604" "20050166232" "20080307339" "8918461" "20090276633" "20080052742" "7310770" "8621533" "20030188320" "7831899" "20070174147" "20040174858" "20120011449" "20070150286" "9342662" "20070157241" "8914394" "8499088" "20110179184" "20090307731" "8386465" "9100549" "8332478" "7953387" "20080301189" "8317618" "8185475" "20030060157" "7103834" "7089307" "20090138922" "20120151509" "8122248" "8949860" "20060075426" "20040175098" "20110066843" "6965770" "7426637" "20100050096" "20090276439" "7231592" "7584353" "20090298490" "8732234" "20060253330" "6192340" "20040174863" "8112810" "20060190413" "20100211466" "20060282864" "20140289747" "20120092444" "20110162009" "6725260" "20080183584" "20090280784" "20070178889" "20040148638" "20060181982" "8219720" "20070101361" "7603437" "20090319695" "20080162623" "20040175096" "20070038717" "20070196802" "20060012813" "7133837" "20070066348" "20120147825" "20060047774" "20070288967" "8775938" "20090049297" "20060282319" "20090133070" "7500177").PN.				
L15	200	("7130895" "8843590" "20080249986" "8578502" "20020112002" "20080222520" "20090303186" "20070250695" "20050120305" "7339493" "7558846" "20080320543" "7308645" "20100057882" "9769544" "20080229204" "8267790" "20020165024" "20090257729" "7624416" "7831605" "20090215477" "20070078949" "20080221948" "20120077586" "20070066291" "8432489" "20090049052" "20090307719" "20100174776" "20100082743" "20070157260" "20060053375" "20100333143" "7747782" "8539533" "10108730" "20090265789" "20060181963" "8577399" "8266223" "20100146544" "8103307" "8577338" "20060277308" "20090298485" "7761602" "8089503" "8849659" "9826273" "8346605" "20040183756" "20090307658" "20060172700" "20050076383" "9955205" "20120047156" "7640327" "20120078937" "20040225564" "6760916" "20110072456" "8826445" "20030237043" "20110179441" "20110185392" "9367489" "20100184422" "9401080" "8856844" "20040253945"	US-PGPUB; USPAT	OR	OFF	2019/05/30 11:01

		"20130018878" "20070048712" "8156206" "8577971" "7376581" "7934170" "8443382" "9047375" "9756170" "7739584" "8438596" "7299304" "7533061" "20080250238" "7995992" "20120133731" "20070250716" "7818350" "7817989" "20090265793" "20030067908" "20110320626" "9253272" "8584184" "8667521" "20090006570" "20100138487" "20110064387" "20030048295" "20120166655" "20120266066" "20060195366" "20040133848" "20060195521" "7853893" "8429687" "6195693" "7711795" "20050120301" "20030050058" "20100257569" "20030061607" "7587372" "20070086445" "20050022110" "7254825" "20060190616" "8121843" "6708203" "20020100052" "20110061071" "8462645" "8271575" "20070245019" "9417758" "7937108" "20070016671" "8881210" "20110306368" "10027998" "20090234923" "20050060755" "20070220024" "9292368" "20070294726" "7973978" "8667299" "7421482" "20110185048" "20110236872" "20110067059" "20080256563" "8666528" "20030012403" "20100134275" "7624417" "20090265549" "8307390" "20090144204" "8814692" "20110164264" "7996775" "20020046407" "20110099277" "7487230" "8201109" "20040220791" "20090217365" "7407092" "6636892" "20050060542" "7895076" "8244595" "20110040731" "8255968" "20090265557" "8813166" "20030120748" "20080118227" "7956272" "20080282083" "20090061824" "10091535" "20020112237" "9367530" "20060291434" "7787818" "20050091302" "8996420" "20060075427" "8467724" "8970668" "20080242221" "9959897" "8090659" "20020049978" "20110004943" "8704863" "8387096" "20100241491" "20080152097" "20070022178" "20100064227" "9384299" "20110078721" "6834308" "20080065486" "20090013059" "7412538").PN.				
L16	200	("20060136980" "8359382" "20080318529" "20020178360" "20100134815" "7904069" "20100299687" "20060161662" "20110289199" "20060129938" "20070117635" "20100299697" "20070169087" "20110173054" "7499765" "6546419" "8614625" "9338276" "20010011284" "20060015201" "6170060" "8391155" "8087091" "8055588" "20100046030" "8678928" "20110271194" "20120066715" "8244589" "8521832" "7168051" "20070063039" "20050235338" "20090100062" "20080052252" "6791588" "20040249851" "9143341" "7469829" "8087047" "20030140107" "20100273525" "20120023126" "8645303" "20020004855" "20050078944" "20100174655" "20110277006" "8107921" "7406508" "20050010866" "20080194175" "20040236945" "20070300261"	US-PGPUB; USPAT	OR	OFF	2019/05/30 11:01

		"20050022210" "20080219638" "20110166860" "20120036585" "20080288600" "9747622" "20070282959" "20080307462" "7308483" "20080235733" "20050132405" "20120042006" "9191610" "7107045" "20060258289" "20040024580" "20100299709" "9172915" "20060136964" "20020053078" "20010030667" "7379901" "9137577" "20170085919" "8676711" "20060021057" "20060168126" "20110185393" "8984562" "20080250239" "7570761" "7920855" "20080288461" "20100332218" "7765280" "20070107032" "8589795" "20100057469" "20090228792" "7412666" "8359031" "7895622" "20070066343" "9451326" "8804039" "7566274" "20080109528" "8332892" "8856833" "20040177371" "6496802" "20120185886" "20060282774" "7567671" "9378516" "20080109839" "20060085821" "20070061759" "20040103184" "7466823" "20100095337" "20070061364" "20050071780" "20100223314" "20110131607" "20080081699" "20100154021" "7505605" "20060294558" "20060120560" "8806530" "7983994" "8886545" "20100137036" "7555543" "20070198532" "20110228763" "20120266084" "8316399" "20060190410" "7159174" "6249914" "20020062252" "20030101294" "8321401" "20100223393" "7120871" "20040260800" "20120192055" "20050091111" "20100186057" "20100312833" "20090013265" "9003473" "20040100492" "7987491" "20050022127" "8990702" "20030229900" "9377924" "20090088206" "20010039659" "8090403" "9076155" "20080180391" "20080214236" "20120078885" "8909740" "20110193780" "20070185840" "20110296472" "20110277002" "7555528" "20120254453" "20050246624" "8141117" "7653446" "9407686" "20110161996" "9443377" "8417720" "7444438" "5957695" "20020092021" "20120078953" "20070073596" "20110113450" "20050229213" "8909296" "7831930" "7996228" "20070063032" "7921446" "7171018" "20070195987" "20090152342" "20020002541" "7711564" "8443288" "8622839" "20080278772" "20090133078" "8073590" "20080065507" "20110282965" "20020082922").PN.				
L17	200	("20110131297" "20070055935" "8736561" "20050021470" "8914402" "20050055716" "20080307463" "8606848" "20100306154" "20090144168" "20020194601" "20110072107" "20100198860" "20030009694" "8949266" "20020013852" "20130031594" "6259449" "20110055026" "20100134843" "20050057538" "7392285" "20070003224" "20070033531" "7624411" "7738918" "8661464" "20050058319" "7637424" "20040044569" "20050240665"	US-PGPUB; USPAT	OR	OFF	2019/05/30 11:01

		"20040174896" "20060195600" "20070073845" "20080065567" "8732232" "20080320396" "7899915" "20090181641" "20040220926" "8813112" "20110277003" "20100280641" "8433306" "20090133069" "7984097" "8391774" "8401366" "7716371" "9911126" "20090251409" "20100046744" "8918812" "9788043" "7480746" "7877103" "9286388" "20060280303" "20070199030" "20070124781" "9961399" "7415430" "20090006192" "7814022" "20110213681" "8219493" "20090258633" "8683510" "8559933" "20090046321" "20080080836" "9807224" "20030041110" "8055688" "7392481" "7632186" "20130018995" "7818423" "20070113264" "8117644" "20080288890" "20030060240" "20050108659" "20060218294" "7676436" "20060031549" "8140649" "20120131570" "8442423" "7523225" "8527640" "20060282512" "20070239611" "7464194" "20090249400" "20070043616" "20060242590" "7386480" "7873708" "20040025190" "20130014190" "7949730" "7716385" "7716273" "7024256" "20090037382" "8196044" "20050004981" "8307286" "6487663" "20110249079" "7673314" "20040070600" "20070127887" "20030014436" "20060282389" "20090141875" "7647614" "20090282111" "8402506" "20070019069" "7870197" "20090217084" "20100119208" "20070022438" "20080222687" "9733804" "20070155311" "9392101" "8620994" "8528032" "20060123339" "8738537" "20080167968" "9003309" "20040268400" "8332530" "20110077046" "8868678" "20040163073" "8700534" "9088826" "8042140" "7870585" "8126313" "8261300" "20070066279" "8793332" "8122466" "8537982" "20110185296" "9621855" "20100241699" "8583602" "8803940" "20100169463" "9318152" "8745228" "20070165144" "20110041154" "20040199615" "20070022447" "20100100915" "20050169467" "8583915" "20110145768" "9893908" "8467773" "20080133759" "9288548" "20070063037" "8261315" "20100325660" "20070050402" "20060095472" "7802285" "20120266077" "20090144130" "8103371" "20120108293" "8060407" "20040098754" "8107929" "9083600" "8959085" "20090183242" "20090031358" "20100251284" "7437434" "20050267935" "7904344" "20050041150" "7590696" "20110083073" "20080307456" "8001187" "20090150406" "20070157194" "20040012613" "20090247221").PN.				
L18	200	("20060023257" "9124441" "20080189391" "7991493" "20100071013" "20120233036" "8266662" "6907225" "9665629" "20090093897" "8966101" "20090215478" "7493283" "20060282513" "20050245241" "20080201201" "8060909" "7472353"	US-PGPUB; USPAT	OR	OFF	2019/05/30 11:01

"20100095332" "8239889" "8527422"
"20100064307" "20080004978" "8028323"
"20090228897" "20080319871"
"20110163969" "9098856" "6529949"
"20100114857" "20040051812" "9135626"
"7895532" "8968077" "8429516"
"20090320073" "9113207" "20110183654"
"20110033166" "8972862" "9037674"
"20030236907" "20120059910"
"20090133090" "20090150941"
"20070142024" "20100303450"
"20090150937" "20080109852"
"20080263600" "20120026278" "8407809"
"20120050012" "20070288986" "8140390"
"8386304" "7506802" "20050097503"
"20090276485" "20120130845"
"20140040445" "7657920" "20100328701"
"20090094096" "20080027567"
"20080003993" "20090142042" "7519703"
"20080132254" "7953386" "20100235381"
"20070174487" "20080260115"
"20100131642" "20110004841"
"20110151844" "20090204487" "8806340"
"20070005783" "20030021441"
"20060282847" "8301648" "20060184609"
"8519964" "20070156841" "6934837"
"20070286420" "20040088180"
"20030095525" "20110041076"
"20120198347" "20070117617" "9390441"
"20060095471" "20110195790"
"20060150120" "7739709" "20100064220"
"7984098" "7167703" "20070250912"
"8312079" "7857217" "9153125"
"20070201502" "20100077441" "7877776"
"8041829" "20060041893" "20110202424"
"20060129688" "20060047844" "7380260"
"20110302052" "7761892" "20090327244"
"7849131" "9454341" "8380786" "9292866"
"8161172" "20020124249" "20050226166"
"20120084662" "8601526" "20070101362"
"10102208" "8473558" "8407756"
"20100228630" "8644463" "20110072106"
"8973072" "9178712" "8943409"
"20030115293" "20120192064"
"20120158531" "20120158514" "8325920"
"9167302" "20110054899" "8051454"
"8639733" "20100319017" "20100070876"
"20080147883" "8024186" "7056217"
"20080098357" "20020077170"
"20090043869" "8078230" "6970916"
"8750687" "20090164653" "20050021494"
"6507727" "7735107" "20040031058"
"20060282514" "20100279669" "8244898"
"20070061309" "10122569" "20110321107"
"8595186" "20080016255" "8510123"
"7761090" "20060112336" "8473865"
"8812614" "20050216942" "20100198822"
"20070180485" "7526573" "20060064350"
"20030194211" "20020124247"
"20100319026" "20070066289"
"20030212613" "7925729" "7941819"
"20100138012" "7441019" "7555466"
"20090197681" "20070066356"
"20100115568" "20130014171" "8336773"

		"20100222102" "20100129057" "8272019" "7738919" "8016202" "7483958" "20100185448").PN.				
L19	200	("20020049037" "6952835" "8412839" "7930561" "20030033420" "20110099286" "8091110" "20120005287" "8131458" "20070198698" "6910068" "8869226" "8072629" "9363470" "20090144144" "20060227761" "9256888" "20090098857" "20070027857" "9002895" "20080184304" "20060174348" "9693013" "7421656" "20030032409" "6408128" "8306859" "20070208564" "20140033025" "20070063012" "7925973" "20070099694" "8051452" "8856641" "8351907" "20110138327" "9185171" "20080207233" "20020116476" "7793325" "8458369" "20100146051" "20120054615" "7660572" "20120246240" "20080133416" "20100322035" "20110113122" "20060161865" "20120072957" "7707614" "8688709" "8600429" "9131256" "20050039133" "20100105454" "20070038931" "8838686" "20110145726" "20100198982" "20110072078" "20070204308" "20090138484" "9389822" "7353267" "20120246585" "20090187486" "20120054811" "7188342" "20050138192" "20120078954" "8793748" "20050074018" "20090319672" "20090325712" "8880624" "20090157513" "20100185736" "7356765" "20080120196" "7873978" "7724399" "8938217" "20100023885" "20060206563" "20100153207" "7523507" "6671807" "20090005071" "20080250319" "7634780" "20120086857" "20100321201" "20060206340" "7523161" "8978066" "20020097984" "20090104872" "20100206950" "20090325642" "8645838" "9355076" "20090270085" "20030236906" "20080300983" "20070281607" "20120131465" "20100077095" "8255552" "8176521" "20070067253" "7103315" "20050149508" "20100186038" "20080188209" "8130668" "20100077433" "20070106681" "20080172243" "8166511" "7676827" "20100317335" "20040117843" "7375673" "8023929" "20060085352" "20070294622" "20070066355" "20010033736" "20070142022" "8875172" "8062134" "7545784" "20100263004" "9900557" "7921154" "8589580" "20060107215" "20110197264" "20020002707" "20110022661" "8788589" "8209376" "8065710" "20110060587" "20070162502" "8483668" "7890661" "20080313146" "8306507" "20050283810" "20120147268" "20080184306" "7574448" "20070180479" "20090150405" "20110166918" "8522279" "20070018952" "20110276335" "20090235297" "6792323" "20110055256" "20080141132" "20110161377" "8886234" "20040045040" "20090144129" "8769528" "7548948"	US-PGPUB; USPAT	OR	OFF	2019/05/30 11:01

		"8280949" "8423427" "8990214" "8910295" "20100174783" "20100313221" "9215506" "9015270" "20020199001" "20080293387" "8966567" "20070100757" "8687016" "20100049606" "20050166153" "20060282390" "20040243482" "9690866" "20080187112" "20120054808" "8458741" "9037502" "20060140170" "20120252557" "20070199076" "20120005041" "20020146122" "20090277956" "9300919" "8250179").PN.				
L20	100	("7937451" "20110078572" "8689113" "20100125882" "20110238731" "20080139193" "8463890" "20050251576" "20020113820" "20120017250" "20100313169" "20110035741" "20060072721" "7206853" "20090006191" "8666367" "20030149988" "7848777" "20080288460" "8209618" "20080120330" "8990692" "8495235" "20080140702" "8943545" "20070135087" "20030095791" "20130144855" "8730028" "20110191163" "7073189" "8577808" "20100225949" "8484332" "7747280" "20030212804" "20030028892" "20110060688" "7966494" "20090049097" "20120060104" "8806341" "20040024889" "20090013348" "7636300" "20090207984" "20120159327" "8015446" "20050155067" "20090106659" "8156193" "20100082681" "20100075641" "8850477" "8635073" "20090298583" "8141111" "8504946" "20060025117" "20070088727" "20090164309" "20090276547" "8156547" "20040243466" "7558597" "8145637" "20060095502" "6484199" "20070066358" "20110202956" "20120023265" "20120127196" "7938727" "20080256205" "9406043" "20110016492" "7251832" "8789052" "20120042047" "20100131979" "8280772" "20100313213" "8014542" "20040181667" "20080010336" "20110173547" "9788068" "20090254778" "20120124615" "7987492" "8391773" "20140101722" "7558563" "20120258742" "20120042391" "20060282783" "7962948" "20080168052" "8406386" "20090006213").PN.	US-PGPUB; USPAT	OR	OFF	2019/05/30 11:01
L21	2500	L8 L9 L10 L11 L12 L13 L14 L15 L16 L17 L18 L19 L20	US-PGPUB; USPAT	OR	OFF	2019/05/30 11:01
L22	6	L1 and L21	US-PGPUB; USPAT	OR	OFF	2019/05/30 11:01
L23	1	L1 and L21 and L2	US-PGPUB; USPAT	OR	OFF	2019/05/30 11:02
L24	2	("20170351757").PN.	US-PGPUB; USPAT; USOCR; DERWENT	OR	OFF	2019/05/30 11:08
L25	2	("20170351757").PN.	US-	OR	OFF	2019/05/30

			PGPUB; USPAT; USOCR; DERWENT			11:08

EAST Search History (Interference)

< This search history is empty>

5/ 30/ 2019 11:16:35 AM
C:\ Users\ dhope\ Documents\ EAST\ Workspaces\ 15687249.wsp

UNITED STATES PATENT AND TRADEMARK OFFICE

USPTO Automated Interview Request (AIR)

Jun 12 2019

This paper requesting to schedule and/or conduct an interview is appropriate because:

This submission is requested to be accepted as an authorization for this interview to communicate via the internet. Recognizing that Internet communications are not secure, I hereby authorize the USPTO to communicate with the undersigned concerning scheduling of the interview via video conference, instant messaging, or electronic mail, and to conduct the interview in accordance with office practice including video conferencing.

Name(s):
Keith Bae

S-signature:
/Keith Bae/

Registration Number:
64633

U.S. Application Number:
15687249

Confirmation Number:
4059

E-mail Address:
kbae@shb.com

Phone Number:
+1 8165590330

Proposed Time of Interview:
6-20-2019 11:00 AM ET

Alternative Proposed Time(s) of Interview:
6-20-2019 3:00 PM ET

Alternative Proposed Time(s) of Interview:
6-21-2019 12:00 PM ET

Prefered Interview Type:
Telephonic

I am the applicant or applicant's representative for this application.

Topic for Discussion:
Discuss distinguishing features of claimed invention against applied prior art

UNITED STATES
PATENT AND TRADEMARK OFFICE

To: IPDOCKET@SHB.COM,IPRCDKT@SHB.COM,
From: PAIR_eOfficeAction@uspto.gov
Cc: PAIR_eOfficeAction@uspto.gov
Subject: Private PAIR Correspondence Notification for Customer Number 149550

Jun 12, 2019 03:38:08 AM

Dear PAIR Customer:

SHOOK, HARDY & BACON LLP
(Touchstream Technologies, Inc.)
2555 GRAND BLVD
KANSAS CITY, MO 64108-2613
UNITED STATES

The following USPTO patent application(s) associated with your Customer Number, 149550 , have new outgoing correspondence. This correspondence is now available for viewing in Private PAIR.

The official date of notification of the outgoing correspondence will be indicated on the form PTOL-90 accompanying the correspondence.

Disclaimer:
The list of documents shown below is provided as a courtesy and is not part of the official file wrapper. The content of the images shown in PAIR is the official record.

Application	Document	Mailroom Date	Attorney Docket No.
15687249	CTFR	06/12/2019	TSTH.278581
	892	06/12/2019	TSTH.278581

To view your correspondence online or update your email addresses, please visit us anytime at https://sportal.uspto.gov/secure/myportal/privatepair.

If you have any questions, please email the Electronic Business Center (EBC) at EBC@uspto.gov with 'e-Office Action' on the subject line or call 1-866-217-9197 during the following hours:

Monday - Friday 6:00 a.m. to 12:00 a.m.

Thank you for prompt attention to this notice,

UNITED STATES PATENT AND TRADEMARK OFFICE

PATENT APPLICATION INFORMATION RETRIEVAL SYSTEM

UNITED STATES PATENT AND TRADEMARK OFFICE

UNITED STATES DEPARTMENT OF COMMERCE
United States Patent and Trademark Office
Address: COMMISSIONER FOR PATENTS
P.O. Box 1450
Alexandria, Virginia 22313-1450
www.uspto.gov

APPLICATION NO.	FILING DATE	FIRST NAMED INVENTOR	ATTORNEY DOCKET NO.	CONFIRMATION NO.
15/687,249	08/25/2017	David Strober	TSTH.278581	4059

149550 7590 07/10/2019
SHOOK, HARDY & BACON LLP
(Touchstream Technologies, Inc.)
2555 GRAND BLVD
KANSAS CITY, MO 64108-2613

EXAMINER
HOPE, DARRIN

ART UNIT	PAPER NUMBER
2173	

NOTIFICATION DATE	DELIVERY MODE
07/10/2019	ELECTRONIC

Please find below and/or attached an Office communication concerning this application or proceeding.

The time period for reply, if any, is set in the attached communication.

Notice of the Office communication was sent electronically on above-indicated "Notification Date" to the following e-mail address(es):

IPDOCKET@SHB.COM
IPRCDKT@SHB.COM

PTOL-90A (Rev. 04/07)

Applicant-Initiated Interview Summary	**Application No.** 15/687,249	**Applicant(s)** Strober, David	
	Examiner DARRIN HOPE	**Art Unit** 2173	**AIA (FITF) Status** No

All participants (applicant, applicants representative, PTO personnel):

(1) DARRIN HOPE. (3) _____.

(2) KEITH BAE. (4) _____.

Date of Interview: 25 June 2019.

Type: ☑ Telephonic ☐ Video Conference
☐ Personal [copy given to: ☐ applicant ☐ applicant's representative]

Exhibit shown or demonstration conducted: ☐ Yes ☑ No.
If Yes, brief description: _____.

Issues Discussed ☐101 ☐112 ☐102 ☐103 ☑Others
(For each of the checked box(es) above, please describe below the issue and detailed description of the discussion)

Claim(s) discussed: 1.

Identification of prior art discussed: None.

Substance of Interview
(For each issue discussed, provide a detailed description and indicate if agreement was reached. Some topics may include: identification or clarification of a reference or a portion thereof, claim interpretation, proposed amendments, arguments of any applied references etc...)

Applicant's representative discussed proposed amendments to claim 1. No agreements on patentability were reached.
.

Applicant recordation instructions: The formal written reply to the last Office action must include the substance of the interview. (See MPEP section 713.04). If a reply to the last Office action has already been filed, applicant is given a non-extendable period of the longer of one month or thirty days from this interview date, or the mailing date of this interview summary form, whichever is later, to file a statement of the substance of the interview.

Examiner recordation instructions: Examiners must summarize the substance of any interview of record. A complete and proper recordation of the substance of an interview should include the items listed in MPEP 713.04 for complete and proper recordation including the identification of the general thrust of each argument or issue discussed, a general indication of any other pertinent matters discussed regarding patentability and the general results or outcome of the interview, to include an indication as to whether or not agreement was reached on the issues raised.

☑ Attachment

/DARRIN HOPE/ Examiner, Art Unit 2173	/TADESSE HAILU/ Primary Examiner, Art Unit 2173

Summary of Record of Interview Requirements

Manual of Patent Examining Procedure (MPEP), Section 713.04, Substance of Interview Must be Made of Record
A complete written statement as to the substance of any face-to-face, video conference, or telephone interview with regard to an application must be made of record in the application whether or not an agreement with the examiner was reached at the interview.

Title 37 Code of Federal Regulations (CFR) 1.133 Interviews
Paragraph (b)

In every instance where reconsideration is requested in view of an interview with an examiner, a complete written statement of the reasons presented at the interview as warranting favorable action must be filed by the applicant. An interview does not remove the necessity for reply to Office action as specified in §§ 1.111, 1.135. (35 U.S.C. 132)

37 CFR §1.2 Business to be transacted in writing.
All business with the Patent or Trademark Office should be transacted in writing. The personal attendance of applicants or their attorneys or agents at the Patent and Trademark Office is unnecessary. The action of the Patent and Trademark Office will be based exclusively on the written record in the Office. No attention will be paid to any alleged oral promise, stipulation, or understanding in relation to which there is disagreement or doubt.

The action of the Patent and Trademark Office cannot be based exclusively on the written record in the Office if that record is itself incomplete through the failure to record the substance of interviews.

It is the responsibility of the applicant or the attorney or agent to make the substance of an interview of record in the application file, unless the examiner indicates he or she will do so. It is the examiners responsibility to see that such a record is made and to correct material inaccuracies which bear directly on the question of patentability.

Examiners must complete an Interview Summary Form for each interview held where a matter of substance has been discussed during the interview by checking the appropriate boxes and filling in the blanks. Discussions regarding only procedural matters, directed solely to restriction requirements for which interview recordation is otherwise provided for in Section 812.01 of the Manual of Patent Examining Procedure, or pointing out typographical errors or unreadable script in Office actions or the like, are excluded from the interview recordation procedures below. Where the substance of an interview is completely recorded in an Examiners Amendment, no separate Interview Summary Record is required.

The Interview Summary Form shall be given an appropriate Paper No., placed in the right hand portion of the file, and listed on the "Contents" section of the file wrapper. In a personal interview, a duplicate of the Form is given to the applicant (or attorney or agent) at the conclusion of the interview. In the case of a telephone or video-conference interview, the copy is mailed to the applicants correspondence address either with or prior to the next official communication. If additional correspondence from the examiner is not likely before an allowance or if other circumstances dictate, the Form should be mailed promptly after the interview rather than with the next official communication.

The Form provides for recordation of the following information:
- Application Number (Series Code and Serial Number)
- Name of applicant
- Name of examiner
- Date of interview
- Type of interview (telephonic, video-conference, or personal)
- Name of participant(s) (applicant, attorney or agent, examiner, other PTO personnel, etc.)
- An indication whether or not an exhibit was shown or a demonstration conducted
- An identification of the specific prior art discussed
- An indication whether an agreement was reached and if so, a description of the general nature of the agreement (may be by attachment of a copy of amendments or claims agreed as being allowable). Note: Agreement as to allowability is tentative and does not restrict further action by the examiner to the contrary.
- The signature of the examiner who conducted the interview (if Form is not an attachment to a signed Office action)

It is desirable that the examiner orally remind the applicant of his or her obligation to record the substance of the interview of each case. It should be noted, however, that the Interview Summary Form will not normally be considered a complete and proper recordation of the interview unless it includes, or is supplemented by the applicant or the examiner to include, all of the applicable items required below concerning the substance of the interview.

A complete and proper recordation of the substance of any interview should include at least the following applicable items:
1) A brief description of the nature of any exhibit shown or any demonstration conducted,-
2) an identification of the claims discussed,
3) an identification of the specific prior art discussed,
4) an identification of the principal proposed amendments of a substantive nature discussed, unless these are already described on the Interview Summary Form completed by the Examiner,
5) a brief identification of the general thrust of the principal arguments presented to the examiner,
   (The identification of arguments need not be lengthy or elaborate. A verbatim or highly detailed description of the arguments is not required. The identification of the arguments is sufficient if the general nature or thrust of the principal arguments made to the examiner can be understood in the context of the application file. Of course, the applicant may desire to emphasize and fully describe those arguments which he or she feels were or might be persuasive to the examiner.)
6) a general indication of any other pertinent matters discussed, and
7) if appropriate, the general results or outcome of the interview unless already described in the Interview Summary Form completed by the examiner.

Examiners are expected to carefully review the applicants record of the substance of an interview. If the record is not complete and accurate, the examiner will give the applicant an extendable one month time period to correct the record.

Examiner to Check for Accuracy

If the claims are allowable for other reasons of record, the examiner should send a letter setting forth the examiners version of the statement attributed to him or her. If the record is complete and accurate, the examiner should place the indication, Interview Record OK on the paper recording the substance of the interview along with the date and the examiners initials.

IN THE UNITED STATES PATENT AND TRADEMARK OFFICE

Appl. No.	:	15/687,249	Confirmation No.	4059
First Inventor	:	David Strober		
Applicant	:	Touchstream Technologies, Inc.		
Filed	:	08/25/2017		
Title	:	PLAY CONTROL OF CONTENT ON A DISPLAY DEVICE		
Group Art Unit	:	2172		
Examiner	:	Gaffin, Jeffrey A		
Atty Docket No.	:	41179.278581		
Customer No.	:	149550		

VIA EMAIL

INTERVIEW AGENDA

For purposes of the interview scheduled for June 26, 2019 at 11AM EST, please consider the following:

Listing of the Claims: begin on page 2 of this paper.

1" = "1" "4851-6255-2731 v1" "" 4851-6255-2731 v1

Listing of the Claims:

1. (Proposed Amendment) A non-transitory computer storage medium storing computer-useable instructions that, when used by one or more computing devices, cause the one or more computing devices to perform operations for remotely presenting various types of content, the operations comprising:

initializing a connection with a remote server device to facilitate an association with a remote computing device;

receiving, from the remote server device, a first set of messages that includes at least one command in a first format, wherein the first set of messages is received based at least in part on a second set of messages including at least one command in a second format having been sent from the associated remote computing device;

~~employing a first media player application operable to load~~ employing a first media player application, compatible with a first piece of content referenced in at least a first message of the received first set of messages, to play the referenced first piece of content; and

controlling ~~a presentation of the first piece of content loaded in the employed~~ how the first media player application plays the referenced first piece of content while the referenced first piece of content is being played based on a first command of the at least one command in the first format having been included in a second message of the received first set of messages ~~for recognition by the first media player application~~.

1" = "1" "4851-6255-2731 v1" "" 4851-6255-2731 v1

To: IPDOCKET@SHB.COM,IPRCDKT@SHB.COM,
From: PAIR_eOfficeAction@uspto.gov
Cc: PAIR_eOfficeAction@uspto.gov
Subject: Private PAIR Correspondence Notification for Customer Number 149550

Jul 10, 2019 03:37:30 AM

Dear PAIR Customer:

SHOOK, HARDY & BACON LLP
(Touchstream Technologies, Inc.)
2555 GRAND BLVD
KANSAS CITY, MO 64108-2613
UNITED STATES

The following USPTO patent application(s) associated with your Customer Number, 149550 , have new outgoing correspondence. This correspondence is now available for viewing in Private PAIR.

The official date of notification of the outgoing correspondence will be indicated on the form PTOL-90 accompanying the correspondence.

Disclaimer:
The list of documents shown below is provided as a courtesy and is not part of the official file wrapper. The content of the images shown in PAIR is the official record.

Application	Document	Mailroom Date	Attorney Docket No.
15687249	INTV.SUM.APP	07/10/2019	TSTH.278581
	OA.APPENDIX	07/10/2019	TSTH.278581

To view your correspondence online or update your email addresses, please visit us anytime at https://sportal.uspto.gov/secure/myportal/privatepair.

If you have any questions, please email the Electronic Business Center (EBC) at EBC@uspto.gov with 'e-Office Action' on the subject line or call 1-866-217-9197 during the following hours:

Monday - Friday 6:00 a.m. to 12:00 a.m.

Thank you for prompt attention to this notice,

UNITED STATES PATENT AND TRADEMARK OFFICE

PATENT APPLICATION INFORMATION RETRIEVAL SYSTEM

PTO/SB/30EFS (02-18)
Approved for use through 11/30/2020. OMB 0651-0031
U.S. Patent and Trademark Office; U.S. DEPARTMENT OF COMMERCE
Under the Paperwork Reduction Act of 1995, no persons are required to respond to a collection of information unless it contains a valid OMB control number.

REQUEST FOR CONTINUED EXAMINATION(RCE)TRANSMITTAL
(Submitted Only via EFS-Web)

Application Number	15687249	Filing Date	2017-08-25	Docket Number (if applicable)	41197.278581	Art Unit	2173
First Named Inventor	David Strober			Examiner Name	Darrin Hope		

This is a Request for Continued Examination (RCE) under 37 CFR 1.114 of the above-identified application.
Request for Continued Examination (RCE) practice under 37 CFR 1.114 does not apply to any utility or plant application filed prior to June 8, 1995, or to any design application. The Instruction Sheet for this form is located at WWW.USPTO.GOV

SUBMISSION REQUIRED UNDER 37 CFR 1.114

Note: If the RCE is proper, any previously filed unentered amendments and amendments enclosed with the RCE will be entered in the order in which they were filed unless applicant instructs otherwise. If applicant does not wish to have any previously filed unentered amendment(s) entered, applicant must request non-entry of such amendment(s).

☐ Previously submitted. If a final Office action is outstanding, any amendments filed after the final Office action may be considered as a submission even if this box is not checked.

- ☐ Consider the arguments in the Appeal Brief or Reply Brief previously filed on _____
- ☐ Other _____

☒ Enclosed

- ☒ Amendment/Reply
- ☐ Information Disclosure Statement (IDS)
- ☐ Affidavit(s)/ Declaration(s)
- ☒ Other 3-month extension of time fee

MISCELLANEOUS

☐ Suspension of action on the above-identified application is requested under 37 CFR 1.103(c) for a period of months _____
(Period of suspension shall not exceed 3 months; Fee under 37 CFR 1.17(i) required)

☐ Other _____

FEES

The RCE fee under 37 CFR 1.17(e) is required by 37 CFR 1.114 when the RCE is filed.
☒ The Director is hereby authorized to charge any underpayment of fees, or credit any overpayments, to Deposit Account No 192112

SIGNATURE OF APPLICANT, ATTORNEY, OR AGENT REQUIRED

X Patent Practitioner Signature

Applicant Signature

PTO/SB/30EFS (02-18)
Approved for use through 11/30/2020. OMB 0651-0031
U.S. Patent and Trademark Office; U.S. DEPARTMENT OF COMMERCE
Under the Paperwork Reduction Act of 1995, no persons are required to respond to a collection of information unless it contains a valid OMB control number.

Signature of Registered U.S. Patent Practitioner			
Signature	/KEITH J. BAE/	Date (YYYY-MM-DD)	2019-12-12
Name	Keith J. Bae	Registration Number	64633

This collection of information is required by 37 CFR 1.114. The information is required to obtain or retain a benefit by the public which is to file (and by the USPTO to process) an application. Confidentiality is governed by 35 U.S.C. 122 and 37 CFR 1.11 and 1.14. This collection is estimated to take 12 minutes to complete, including gathering, preparing, and submitting the completed application form to the USPTO. Time will vary depending upon the individual case. Any comments on the amount of time you require to complete this form and/or suggestions for reducing this burden, should be sent to the Chief Information Officer, U.S. Patent and Trademark Office, U.S. Department of Commerce, P.O. Box 1450, Alexandria, VA 22313-1450.

If you need assistance in completing the form, call 1-800-PTO-9199 and select option 2.

Privacy Act Statement

The Privacy Act of 1974 (P.L. 93-579) requires that you be given certain information in connection with your submission of the attached form related to a patent application or patent. Accordingly, pursuant to the requirements of the Act, please be advised that: (1) the general authority for the collection of this information is 35 U.S.C. 2(b)(2); (2) furnishing of the information solicited is voluntary; and (3) the principal purpose for which the information is used by the U.S. Patent and Trademark Office is to process and/or examine your submission related to a patent application or patent. If you do not furnish the requested information, the U.S. Patent and Trademark Office may not be able to process and/or examine your submission, which may result in termination of proceedings or abandonment of the application or expiration of the patent.

The information provided by you in this form will be subject to the following routine uses:

1. The information on this form will be treated confidentially to the extent allowed under the Freedom of Information Act (5 U.S.C. 552) and the Privacy Act (5 U.S.C. 552a). Records from this system of records may be disclosed to the Department of Justice to determine whether the Freedom of Information Act requires disclosure of these records.

2. A record from this system of records may be disclosed, as a routine use, in the course of presenting evidence to a court, magistrate, or administrative tribunal, including disclosures to opposing counsel in the course of settlement negotiations.

3. A record in this system of records may be disclosed, as a routine use, to a Member of Congress submitting a request involving an individual, to whom the record pertains, when the individual has requested assistance from the Member with respect to the subject matter of the record.

4. A record in this system of records may be disclosed, as a routine use, to a contractor of the Agency having need for the information in order to perform a contract. Recipients of information shall be required to comply with the requirements of the Privacy Act of 1974, as amended, pursuant to 5 U.S.C. 552a(m).

5. A record related to an International Application filed under the Patent Cooperation Treaty in this system of records may be disclosed, as a routine use, to the International Bureau of the World Intellectual Property Organization, pursuant to the Patent Cooperation Treaty.

6. A record in this system of records may be disclosed, as a routine use, to another federal agency for purposes of National Security review (35 U.S.C. 181) and for review pursuant to the Atomic Energy Act (42 U.S.C. 218(c)).

7. A record from this system of records may be disclosed, as a routine use, to the Administrator, General Services, or his/her designee, during an inspection of records conducted by GSA as part of that agency's responsibility to recommend improvements in records management practices and programs, under authority of 44 U.S.C. 2904 and 2906. Such disclosure shall be made in accordance with the GSA regulations governing inspection of records for this purpose, and any other relevant (i.e., GSA or Commerce) directive. Such disclosure shall not be used to make determinations about individuals.

8. A record from this system of records may be disclosed, as a routine use, to the public after either publication of the application pursuant to 35 U.S.C. 122(b) or issuance of a patent pursuant to 35 U.S.C. 151. Further, a record may be disclosed, subject to the limitations of 37 CFR 1.14, as a routine use, to the public if the record was filed in an application which became abandoned or in which the proceedings were terminated and which application is referenced by either a published application, an application open to public inspections or an issued patent.

9. A record from this system of records may be disclosed, as a routine use, to a Federal, State, or local law enforcement agency, if the USPTO becomes aware of a violation or potential violation of law or regulation.

Electronic Patent Application Fee Transmittal

Application Number:	15687249
Filing Date:	25-Aug-2017
Title of Invention:	PLAY CONTROL OF CONTENT ON A DISPLAY DEVICE
First Named Inventor/Applicant Name:	David Strober
Filer:	Keith Joshua Bae/Traci Burke
Attorney Docket Number:	41197.278581

Filed as Small Entity

Filing Fees for Utility under 35 USC 111(a)

Description	Fee Code	Quantity	Amount	Sub-Total in USD($)
Basic Filing:				
Pages:				
Claims:				
Miscellaneous-Filing:				
Petition:				
Patent-Appeals-and-Interference:				
Post-Allowance-and-Post-Issuance:				
Extension-of-Time:				

Description	Fee Code	Quantity	Amount	Sub-Total in USD($)
Extension - 3 months with $0 paid	2253	1	700	700
Miscellaneous:				
RCE- 1ST REQUEST	2801	1	650	650
		Total in USD ($)		**1350**

Electronic Acknowledgement Receipt

EFS ID:	38010206
Application Number:	15687249
International Application Number:	
Confirmation Number:	4059
Title of Invention:	PLAY CONTROL OF CONTENT ON A DISPLAY DEVICE
First Named Inventor/Applicant Name:	David Strober
Customer Number:	149550
Filer:	Keith Joshua Bae/Traci Burke
Filer Authorized By:	Keith Joshua Bae
Attorney Docket Number:	41197.278581
Receipt Date:	12-DEC-2019
Filing Date:	25-AUG-2017
Time Stamp:	13:38:58
Application Type:	Utility under 35 USC 111(a)

Payment information:

Submitted with Payment	yes
Payment Type	CARD
Payment was successfully received in RAM	$1350
RAM confirmation Number	E2019BBD39214348
Deposit Account	
Authorized User	
The Director of the USPTO is hereby authorized to charge indicated fees and credit any overpayment as follows:	

File Listing:

Document Number	Document Description	File Name	File Size(Bytes)/ Message Digest	Multi Part /.zip	Pages (if appl.)
1		278581_RESPONSE_TO_FINAL_OA.pdf	91523 07b8fd566e78499627d580aac9d9669d0b22d427	yes	17

Multipart Description/PDF files in .zip description

Document Description	Start	End
Applicant Arguments/Remarks Made in an Amendment	11	17
Applicant summary of interview with examiner	10	10
Amendment Copy Claims/Response to Suggested Claims	2	9
Amendment Submitted/Entered with Filing of CPA/RCE	1	1

Warnings:

Information:

2	Request for Continued Examination (RCE)	278581_RCE.pdf	1350009 d3bd8ec0087b1d046e1301e9f2d6578c1f69f9cc	no	3

Warnings:

Information:

3	Fee Worksheet (SB06)	fee-info.pdf	32620 25b8e6a702b89b69d7c49c3c31f8518d45ca9d0a	no	2

Warnings:

Information:

Total Files Size (in bytes):	1474152

This Acknowledgement Receipt evidences receipt on the noted date by the USPTO of the indicated documents, characterized by the applicant, and including page counts, where applicable. It serves as evidence of receipt similar to a Post Card, as described in MPEP 503.

New Applications Under 35 U.S.C. 111
If a new application is being filed and the application includes the necessary components for a filing date (see 37 CFR 1.53(b)-(d) and MPEP 506), a Filing Receipt (37 CFR 1.54) will be issued in due course and the date shown on this Acknowledgement Receipt will establish the filing date of the application.
National Stage of an International Application under 35 U.S.C. 371
If a timely submission to enter the national stage of an international application is compliant with the conditions of 35 U.S.C. 371 and other applicable requirements a Form PCT/DO/EO/903 indicating acceptance of the application as a national stage submission under 35 U.S.C. 371 will be issued in addition to the Filing Receipt, in due course.
New International Application Filed with the USPTO as a Receiving Office
If a new international application is being filed and the international application includes the necessary components for an international filing date (see PCT Article 11 and MPEP 1810), a Notification of the International Application Number and of the International Filing Date (Form PCT/RO/105) will be issued in due course, subject to prescriptions concerning national security, and the date shown on this Acknowledgement Receipt will establish the international filing date of the application.

REMARKS

The Non-Final Office Action mailed June 12, 2019 has been received and reviewed. Prior to the present communication, claims 1-20 were pending and claims 1-20 stand rejected. Each of claims 1-2 and 4-20 has been amended herein. No new matter has been added. Reconsideration of the subject application is respectfully requested in view of the amendments and the following remarks.

Rejections based on 35 U.S.C. § 102

Claims 1 and 4-20

Claims 1 and 4-20 are rejected under 35 U.S.C. § 102 as ostensibly being anticipated by U.S. Publication No. 2012/0130971 to Morris (hereinafter "Morris"). Applicant respectfully traverses this rejection. As the asserted reference fails to describe, expressly or inherently, each and every element recited in the rejected claims, Applicant respectfully traverses the rejection, as hereinafter set forth.

Applicant has amended independent claims 1, 12, and 17 to similarly recite, among other things, "***obtaining a synchronization code associated with the first computing device***, wherein the associated synchronization code is stored on a remote server device; ***providing the synchronization code to a second computing device in communication with the remote server device***, wherein the ***provided synchronization code causes the remote server device to store an association between the first computing device and the second computing device***; receiving, from the remote server device, a first message that includes at least one command in a first format, the first message being received ***based at least in part on the stored association and on a second message including at least one command in a second format having been sent from the associated second computing device***; ***selecting a first media player application from a plurality***

of media player applications based at least in part on the first format of the first message, the first media player application being selected to play a first piece of content referenced in the received first message; and ***controlling how the selected first media player application plays the referenced first piece of content*** based on a first command of the at least one command in the first format having been included in the received first message." Applicant submits that Morris fails to describe each and every one of the above-recited features.

First and foremost, Applicant submits that Morris does not describe "***obtaining a synchronization code associated with the first computing device***, wherein the associated synchronization code is stored on a remote server device; ***providing the synchronization code to a second computing device in communication with the remote server device***, wherein the ***provided synchronization code causes the remote server device to store an association between the first computing device and the second computing device***." At best, Morris recites

> Settings of the throw application 132 may cause the processor 116 to send to the display 120 a listing of one or more external display devices (e.g., a family room television or a bedroom television). Entries in the listing may be stored in a table in the memory 122. For each external display device in the table, the table may include a network address for a media device that provides media content to the external display device.

See Morris, ¶[0028]. Applicant submits that settings stored in a table is entirely different from obtaining an associated synchronization code by a first computing device, which is then provided by the first computing device to a second computing device in communication with a remote server device, causing the remote server device to store an association between the first and second computing devices, as similarly recited in the amended independent claims. For at least these reasons, Morris fails to anticipate the recited features of at least the amended independent claims.

Second, Morris fails to describe at least "receiving, from the remote server device, a first message that includes at least one command in a first format, ***the first message being received based at least in part on the stored association and on a second message including at least one command in a second format having been sent from the associated second computing device***." Morris generally describes technology for sending from an application server a network address of a media content item to a display device. *See* Morris, [0068]. If a set top box of the display device cannot play a format of the content item, then the application server can transcode the content item to a compatible format and send it to the set top box to be played on the display device. *See* id. At best, Morris describes a transcode module that can determine the format <u>of a media content item</u>, determine that a destination cannot play <u>the media content item</u> in the format, and transcode <u>the media content item</u> into a format compatible with the destination. *See* Morris, paragraphs [0026] and [0033-34]. Applicant submits that <u>a ***first message including at least one command in a first format***</u> *being received* ***based at least in part on the stored association and on <u>a second message including at least one command in a second format</u> having been sent from the associated second computing device*** is different from the communication of transcoded media content based on a determined incompatibility. Applicant's claims specifically recite "first piece of content", which should not be conflated with "messages" or "commands," though it appears that the Office conflates "transcoded media content" with one or both claim elements. Applicant's claims recite further steps, such as selection of a first media player to play a first piece of content referenced in the first message. The claim does not recite *playing a received message or playing a received command with a first media player*, as would be necessary to reasonably utilize a broadest reasonable interpretation rejection in this instance.

Finally, Applicant submits that Morris does not describe "***selecting a first media player application from a plurality of media player applications based at least in part on the first format of the first message***, the first media player application being **selected to play a first piece of content referenced in the received first message**; and ***controlling how the selected first media player application plays the referenced first piece of content*** based on a first command of the at least one command in the first format having been included in the received first message." Specifically, Morris fails to describe *selecting from a plurality of media player applications based on the format of a received message*. At best, Morris merely describes that "the application server may determine whether the particular media content item is in a format that can be played by the particular set top box." *See* Morris, [0068]. Applicant submits that the application server of Morris is <u>not</u> a first computing device or a content presentation device, as required by the amended independent claims. The "set top box" of Morris does not ***select a first media player application from a plurality of media player applications based at least in part on the first format of the first message***, nor does the set top box of Morris ***control how the selected first media player application plays the referenced first piece of content*** based on a first command of the at least one command in the first format having been included in the received first message.

For at least the reasons as detailed hereinabove for the similar features of amended independent claims 1, 12, and 17, Morris fails to describe each element recited in amended independent claims 1, 12, and 17. Accordingly, withdrawal of the rejections of these claims is respectfully requested as well, for at least the above-cited reasons. Claims 2-11, 13-16, and 18-20 are believed to be in condition for allowance and such favorable action is respectfully requested.

Applicant further submits that the dependent claims are also allowable for the additional features recited therein. For instance, claims 9 or 15 recite the retrieval of a first media

player ***application*** from a remote content provider based on (a) determining that the first media player application is not already selected or (b) the first format of the first message. Applicant submits that, at best, Morris notes that media ***content*** from a content provider can be referenced in a message. Applicant submits that referenced media ***content*** is different than retrieval of a media player ***application*** from a remote content provider. More so, retrieval of the media player application based on determining that it is not already selected is far removed from the referencing of media content as in Morris.

Rejections based on 35 U.S.C. § 103

Claims 2 and 3

Claims 2 and 3 were rejected under 35 U.S.C. § 103 as ostensibly being unpatentable over Morris in view of U.S. Publication No. 2009/0248802 to Mahajan et al. (hereinafter "Mahajan"). Applicant respectfully traverses this rejection. Applicant submits that Mahajan fails to cure the deficiencies of Morris, as noted above at least with respect to the amended independent claims. Applicant respectfully traverses this rejection, because the cited references, both alone or in combination, fail to teach or suggest all of the features of the independent claims as amended. Specifically, as noted above, Morris is deficient in describing "***obtaining a synchronization code associated with the first computing device***, wherein the associated synchronization code is stored on a remote server device; ***providing the synchronization code to a second computing device in communication with the remote server device***, wherein the ***provided synchronization code causes the remote server device to store an association between the first computing device and the second computing device***; receiving, from the remote server device, a first message that includes at least one command in a first format, the first message being

received ***based at least in part on the stored association and on a second message including at least one command in a second format having been sent from the associated second computing device***; ***selecting a first media player application from a plurality of media player applications based at least in part on the first format of the first message***, the first media player application being selected to play a first piece of content referenced in the received first message; and ***controlling how the selected first media player application plays the referenced first piece of content*** based on a first command of the at least one command in the first format having been included in the received first message." Applicant submits that Mahajan is similarly deficient in teaching these features. Applicant does not concede to the Office's assertions regarding Mahajan, and because Mahajan was only cited against dependent claims 2-3, not to the independent claims, Applicant submits that the claims are allowable because Mahajan does not cure the deficiencies of Morris.

As the applied references, both alone and in combination, do not teach or suggest all features of amended independent claims 1, 12, and 17, Applicant respectfully requests that the 35 U.S.C. § 103(a) rejection be withdrawn. As claims 2-3 depend directly or indirectly from amended independent claim 1y, Applicant respectfully requests that the 35 U.S.C. § 103(a) rejection to claims 2-3 be withdrawn for the same reasons as the amended independent claim from which they depend, and for the additional features recited therein.

CONCLUSION

For at least the reasons stated above, the pending claims are believed to be in condition for allowance. Applicant respectfully requests withdrawal of the pending rejections and allowance of the claims. If any issues remain that would prevent issuance of this application, the Examiner is urged to contact the undersigned – 816-474-6550 or kbae@shb.com (such communication via email is herein expressly granted) – to resolve the same. It is believed that all fees due have been paid. However, if this belief is in error, the Commissioner is hereby authorized to charge any amount required to Deposit Account No. 19-2112, with reference to Attorney Docket No. 41197.278581.

Respectfully submitted,

/KEITH J. BAE/

Keith J. Bae
Reg. No. 64,633

KJBY/sw
SHOOK, HARDY & BACON L.L.P.
2555 Grand Blvd.
Kansas City, MO 64108-2613
816-474-6550 Telephone
816-421-5547 Fax

SUMMARY OF EXAMINER INTERVIEW

Applicant would like to thank the Examiner for granting an interview on June 26, 2019. During the interview, Applicant discussed proposed amendments to independent claim 1. No agreement was reached.

Amendments to the Claims:

This listing of claims will replace all prior versions, and listings, of claims in the application:

Listing of Claims:

1. (Currently Amended) A non-transitory computer storage medium storing computer-useable instructions that, when used by ~~one or more~~ a first computing device[[s]], cause the ~~one or more~~ first computing device[[s]] to perform operations ~~for remotely presenting various types of content, the operations~~ comprising:

obtaining a synchronization code associated with the first computing device, wherein the associated synchronization code is stored on a remote server device;

providing the synchronization code to a second computing device in communication with the remote server device, wherein the provided synchronization code causes the remote server device to store an association between the first computing device and the second computing device;

~~initializing a connection with a remote server device to facilitate an association with a remote computing device;~~

receiving, from the remote server device, a first message that includes at least one command in a first format, ~~wherein~~ the first message [[is]]being received based at least in part on the stored association and on a second message including at least one command in a second format having been sent from the associated second ~~remote~~ computing device;

~~employing~~ selecting a first media player application from a plurality of media player applications based at least in part on the first format of the first

message, the first media player application being selected ~~operable~~ to [[load]]play a first piece of content referenced in the received first message; and

controlling ~~a presentation of~~ how the selected first media player application plays the referenced first piece of content ~~loaded in the employed first media player application~~ based on a first command of the at least one command in the first format having been included in the received first message ~~for recognition by the first media player application~~.

2. (Currently Amended) The non-transitory computer storage medium of claim 1, wherein [[a]]each command of the at least one command in the second format is a universal command.

3. (Original) The non-transitory computer storage medium of claim 2, wherein the first format is different than the second format.

4. (Currently Amended) The non-transitory computer storage medium of claim 1, wherein the second message is sent from the associated second computing device to the remote server device.

5. (Currently Amended) The non-transitory computer storage medium of claim 1, wherein the remote server device is configured to convert the at least one command in the second format ~~is converted~~ into the at least one command in the first format based at least in part on the second message including therein a reference to the first piece of content.

6. (Currently Amended) The non-transitory computer storage medium of claim 1, wherein the remote server device is configured to convert the at least one command in the second format ~~is converted~~ into the at least one command in the first format based at least in part on a reference to the first media player application having been included in the second message.

7. (Currently Amended) The non-transitory computer storage medium of claim 1, wherein the first media player application is ~~employed~~ selected based at least in part on the received first message including therein a reference to the first media player application.

8. (Currently Amended) The non-transitory computer storage medium of claim 1, wherein controlling ~~the presentation~~ how the selected first media player application plays the referenced first piece of content includes an execution of the first command.

9. (Currently Amended) The non-transitory computer storage medium of claim 1, the operations further comprising:

~~obtaining~~ retrieving the first media player application from a remote content provider based on a determination that the first media player application is not already ~~being employed~~ selected.

10. (Currently Amended) The non-transitory computer storage medium of claim 9, wherein ~~the first media player application is obtained from a~~ the remote content provider ~~that corresponds to~~ is associated with the referenced first piece of content.

11. (Currently Amended) The non-transitory computer storage medium of claim 1, the operations further comprising:

based on the stored association and while the first media player application is selected, receiving, from the remote server device, a third message that includes at least one command in a third format, wherein the third message is received based at least in part on a fourth message including at least one other command in the second format having been sent from the associated second computing device; and

selecting a second media player application from the plurality of media player applications based at least in part on the third format of the third message, the second media player application being selected to play a second piece of content referenced in the third message. ~~wherein the connection with the remote server device is maintained, for at least a duration that the first media player application is being employed, to facilitate a change from the first media player application to a second media player application operable to load a second piece of content referenced in a second message received from the remote server device.~~

12. (Currently Amended) A computer-implemented method for remotely presenting various types of content, comprising:

obtaining, by a content presentation device, a synchronization code associated with the content presentation device, wherein the associated synchronization code is stored on a remote server device;

providing, by the content presentation device, the synchronization code to a remote computing device in communication with the remote server device, wherein the provided synchronization code causes the remote server device to store

an association between the content presentation device and the remote computing device;

~~initializing, by a content presentation device, a connection with a remote server device to facilitate an association between the content presentation device and a remote computing device;~~

receiving, by the content presentation device and from the remote server device, a first message that includes at least one command in a first format, ~~wherein~~ the first message [[is]]being received based at least in part on the stored association and on a second message including at least one command in a second format having been sent from the associated remote computing device ~~associated with the content presentation device~~;

~~employing~~ selecting, by the content presentation device while [[the]]a connection [[with]]between the content presentation device and the remote server device is maintained, a first media player application from a plurality of media player applications based at least in part on the first format of the first message, the first media player application being selected to play ~~operable to load~~ a first piece of content ~~based at least in part on the first piece of content being~~ referenced in the received first message; and

controlling, by the content presentation device, ~~a presentation of~~ how the selected first media player application plays the referenced first piece of content ~~loaded in the employed first media player application~~ based on a first command of the at least one command in the first format having been included in the received first message ~~for recognition by the first media player application~~.

13. (Currently Amended) The computer-implemented method of claim 12, wherein the first media player application is ~~employed~~ selected based ~~at least~~ further in part on the received first message including therein a reference to the first media player application.

14. (Currently Amended) The computer-implemented method of claim 12, the operations further comprising:

~~obtaining~~ selecting the first media player application based on a determination that a second media player application is ~~being employed~~ currently selected.

15. (Currently Amended) The computer-implemented method of claim 12, further comprising: ~~wherein the first media player application obtained by~~ retrieving, by the content presentation device, the selected first media player application from a remote content provider ~~associated with the referenced first piece of content~~ based on the first format of the first message.

16. (Currently Amended) The computer-implemented method of claim 12, wherein the remote server device is configured to convert the at least one command in the second format into the at least one command in the first format based at least in part on a reference to the first media player application having been included in the second message, and wherein the first media player application is selected based further on the at least one command in the first format having been converted from the second format. ~~the presentation of the first piece of content loaded in the employed first media player application is controlled based further on the first command in the first format having been converted, from the second command in the second format, for inclusion in the received first message for recognition by the first media player application.~~

17. (Currently Amended) A content presentation device comprising:

a display;

at least one processor; and

at least one computer storage media storing computer-usable instructions that, when used by the at least one processor, cause the at least one processor to:

obtain a synchronization code associated with the content presentation device, wherein the associated synchronization code is stored on a remote server device;

provide the synchronization code to a remote computing device in communication with the remote server device, wherein the provided synchronization code causes the remote server device to store an association between the content presentation device and the remote computing device;

~~initialize a connection with a remote server device to facilitate an association between the content presentation device and a remote computing device, wherein the associated remote computing device is configured to send messages that include at least one command in a second format;~~

receive, from the remote server device, a first message that includes at least one command in a first format, the first message being received based on the stored association and on a second message in the second format sent from the associated remote computing device;

~~employ~~ select a first media player application from a plurality of media player applications based on the first format of the first message, the first media

player application being selected to play~~ operable to load~~ a first piece of content referenced in the received first message; and

control~~ a presentation of~~ how the selected first media player application plays the referenced first piece of content~~ loaded in the employed first media player application~~ based on a first command of the at least one command in the first format having been included in the received first message~~ for recognition by the first media player application~~.

18. (Currently Amended) The content presentation device of claim 17, wherein the first media player application is configured to recognize [[a]]each command of the at least one command in the first format~~ is recognizable by the first media player application~~.

19. (Currently Amended) The content presentation device of claim 17, wherein the second message is sent from the associated second computing device to the remote server device.

20. (Currently Amended) The content presentation device of claim 18, wherein the first media player application is~~ employed~~ selected based~~ at least in part~~ further on the received first message including therein a reference to the first media player application.

PATENT

IN THE UNITED STATES PATENT AND TRADEMARK OFFICE

Appl. No.	:	15/687,249	Confirmation No.	4059
First Inventor	:	David Strober		
Applicant	:	Touchstream Technologies, Inc.		
Filed	:	08/25/2017		
Title	:	PLAY CONTROL OF CONTENT ON A DISPLAY DEVICE		
Group Art Unit	:	2173		
Examiner	:	Darrin Hope		
Atty Docket No.	:	41197.278581		
Customer No.	:	149550		

VIA EFS-WEB – December 12, 2019

Mail Stop RCE
Commissioner for Patents
P. O. Box 1450
Alexandria, VA 22313-1450

PETITION FOR EXTENSION OF TIME AND SUBMISSION IN SUPPORT OF REQUEST FOR CONTINUED EXAMINATION AND PROPOSED AMENDMENT UNDER 37 C.F.R. § 1.116

Applicant hereby requests a three-month extension of time to respond to the Final Office Action mailed June 12, 2019, extending the period for response to December 12, 2019. Applicant respectfully requests continued examination of the above-identified application. The following is in accordance with the requirements for submission under 37 C.F.R. § 1.114 (c) and MPEP 706.07(h), Sec. II. In response to the outstanding Final Office Action, please amend the above-identified application as follows:

Amendments to the Claims: begin on page 2 of this paper.

Summary of Examiner Interview: begins on page 10 of this paper

Remarks: begin on page 11 of this paper.

PTO/SB/08a (02-18)
Approved for use through 11/30/2020. OMB 0651-0031
U.S. Patent and Trademark Office; U.S. DEPARTMENT OF COMMERCE
Under the Paperwork Reduction Act of 1995, no persons are required to respond to a collection of information unless it contains a valid OMB control number.

INFORMATION DISCLOSURE STATEMENT BY APPLICANT

(Not for submission under 37 CFR 1.99)

Application Number	15687249
Filing Date	2017-08-25
First Named Inventor	David Strober
Art Unit	2173
Examiner Name	Darrin Hope
Attorney Docket Number	41197.278581

U.S.PATENTS Remove

Examiner Initial*	Cite No	Patent Number	Kind Code[1]	Issue Date	Name of Patentee or Applicant of cited Document	Pages,Columns,Lines where Relevant Passages or Relevant Figures Appear
	1	8763081	B2	2014-06-24	Bogdanovic et al.	
	2	8762548	B1	2014-06-24	Kessel et al.	
	3	8762240	B2	2014-06-24	Sogo et al.	
	4	8761792	B2	2014-06-24	Sennett et al.	
	5	8761351	B1	2014-06-24	Daly et al.	
	6	8756505	B2	2014-06-17	Gonze et al.	
	7	8756333	B2	2014-06-17	Jannink et al.	
	8	8755919	B2	2014-06-17	Pyle	

INFORMATION DISCLOSURE STATEMENT BY APPLICANT (Not for submission under 37 CFR 1.99)	Application Number	15687249
	Filing Date	2017-08-25
	First Named Inventor	David Strober
	Art Unit	2173
	Examiner Name	Darrin Hope
	Attorney Docket Number	41197.278581

	9	8752016	B2	2014-06-10	Hernandez Porras et al.	
	10	8751793	B2	2014-06-10	Ginter et al.	
	11	8751520	B1	2014-06-10	Bhattacharjee et al.	
	12	8751159	B2	2014-06-10	Hall	
	13	8745388	B2	2014-06-03	Kanungo	
	14	8745228	B2	2014-06-03	Beckert et al.	
	15	8744434	B2	2014-06-03	Funderburk et al.	
	16	8743284	B2	2014-06-03	Russell et al.	
	17	8739074	B2	2014-05-27	Kinoshita	
	18	8738737	B2	2014-05-27	Baldini et al.	
	19	8738536	B2	2014-05-27	Strom et al.	

INFORMATION DISCLOSURE STATEMENT BY APPLICANT (Not for submission under 37 CFR 1.99)	Application Number	15687249
	Filing Date	2017-08-25
	First Named Inventor	David Strober
	Art Unit	2173
	Examiner Name	Darrin Hope
	Attorney Docket Number	41197.278581

	20	8659553	B1	2014-02-25	Chan et al.	
	21	8572488	B2	2013-10-29	Phillips et al.	
	22	8418084	B1	2013-04-09	Tischer	
	23	8402494	B1	2013-03-19	Hu et al.	
	24	8373660	B2	2013-02-12	Pallakoff	
	25	8344870	B2	2013-01-01	Evans et al.	
	26	8316308	B2	2012-11-20	Sherman et al.	
	27	8255968	B2	2012-08-28	Louie et al.	
	28	8250608	B2	2012-08-21	Hayes et al.	
	29	8230360	B2	2012-07-24	Ma et al.	
	30	8171507	B2	2012-05-01	Hironaka et al.	

INFORMATION DISCLOSURE STATEMENT BY APPLICANT (Not for submission under 37 CFR 1.99)	Application Number	15687249
	Filing Date	2017-08-25
	First Named Inventor	David Strober
	Art Unit	2173
	Examiner Name	Darrin Hope
	Attorney Docket Number	41197.278581

	31	8086679	B2	2011-12-27	Nobori et al.	
	32	7956846	B2	2011-06-07	Ording et al.	
	33	7949606	B1	2011-05-24	Sweet	
	34	7878904	B2	2011-02-01	Maehiro	
	35	7849485	B2	2010-12-07	Paik et al.	
	36	7835505	B2	2010-11-16	Toyama et al.	
	37	7814144	B2	2010-10-12	Koyama et al.	
	38	7774708	B2	2010-08-10	Bell et al.	
	39	7769827	B2	2010-08-03	Girouard et al.	
	40	7689931	B2	2010-03-30	Koga et al.	
	41	7614070	B2	2009-11-03	Urdang et al.	

INFORMATION DISCLOSURE STATEMENT BY APPLICANT (Not for submission under 37 CFR 1.99)	Application Number	15687249
	Filing Date	2017-08-25
	First Named Inventor	David Strober
	Art Unit	2173
	Examiner Name	Darrin Hope
	Attorney Docket Number	41197.278581

	42	7509588	B2	2009-03-24	Van Os et al.	
	43	7453454	B2	2008-11-18	Allen et al.	
	44	7440972	B2	2008-10-21	Oetzel	
	45	7433922	B2	2008-10-07	Engstrom	
	46	7424718	B2	2008-09-09	Dutton	
	47	7330875	B1	2008-02-12	Parasnis et al.	
	48	7114173	B2	2006-09-26	Urdang et al.	
	49	7058356	B2	2006-06-06	Slotznick	
	50	6978424	B2	2005-12-20	Safadi	
	51	6756965	B2	2004-06-29	Combs et al.	
	52	6252889	B1	2001-06-26	Patki et al.	

INFORMATION DISCLOSURE STATEMENT BY APPLICANT (Not for submission under 37 CFR 1.99)	Application Number	15687249
	Filing Date	2017-08-25
	First Named Inventor	David Strober
	Art Unit	2173
	Examiner Name	Darrin Hope
	Attorney Docket Number	41197.278581

	53	6181713	B1	2001-01-30	Patki et al.	
	54	5878311	A	1999-03-02	ICHINOKAWA KAZUHIRO	
	55	5613137	A	1997-03-18	BERTRAM RANDAL L et al.	

If you wish to add additional U.S. Patent citation information please click the Add button. Add

U.S.PATENT APPLICATION PUBLICATIONS Remove

Examiner Initial*	Cite No	Publication Number	Kind Code[1]	Publication Date	Name of Patentee or Applicant of cited Document	Pages,Columns,Lines where Relevant Passages or Relevant Figures Appear
	1	20140033198	A1	2014-01-30	Umapathy et al.	
	2	20130250181	A1	2013-09-26	Zhang et al.	
	3	20130124759	A1	2013-05-16	Strober	
	4	20130014142	A1	2013-01-10	Newell	
	5	20120272148	A1	2012-10-25	Strober	
	6	20120254931	A1	2012-10-04	Oztaskent et al.	

INFORMATION DISCLOSURE STATEMENT BY APPLICANT (Not for submission under 37 CFR 1.99)	Application Number	15687249
	Filing Date	2017-08-25
	First Named Inventor	David Strober
	Art Unit	2173
	Examiner Name	Darrin Hope
	Attorney Docket Number	41197.278581

	7	20120239218	A1	2012-09-20	Forbes, JR.	
	8	20120185887	A1	2012-07-19	Newell	
	9	20120182994	A1	2012-07-19	Dec et al.	
	10	20120166560	A1	2012-06-28	Nobori et al.	
	11	20120110464	A1	2012-05-03	Chen et al.	
	12	20120110074	A1	2012-05-03	Getchius	
	13	20120102209	A1	2012-04-26	Fok Ah Chuen et al.	
	14	20120072846	A1	2012-03-22	Curtis	
	15	20120059876	A1	2012-03-08	CHINTA et al.	
	16	20120054616	A1	2012-03-01	Mittal	
	17	20110314386	A1	2011-12-22	JEONG et al.	

INFORMATION DISCLOSURE STATEMENT BY APPLICANT (Not for submission under 37 CFR 1.99)	Application Number	15687249
	Filing Date	2017-08-25
	First Named Inventor	David Strober
	Art Unit	2173
	Examiner Name	Darrin Hope
	Attorney Docket Number	41197.278581

	18	20110296465	A1	2011-12-01	Krishnan et al.	
	19	20110296454	A1	2011-12-01	Xiong et al.	
	20	20110289419	A1	2011-11-24	Yu et al.	
	21	20110267981	A1	2011-11-03	DAVIES	
	22	20110239119	A1	2011-09-29	Phillips et al.	
	23	20110231566	A1	2011-09-22	Gelter et al.	
	24	20110231565	A1	2011-09-22	Gelter et al.	
	25	20110231265	A1	2011-09-22	Brown et al.	
	26	20110228768	A1	2011-09-22	Gelter et al.	
	27	20110214148	A1	2011-09-01	Gossweiler, III et al.	
	28	20110202466	A1	2011-08-18	Carter	

INFORMATION DISCLOSURE STATEMENT BY APPLICANT (Not for submission under 37 CFR 1.99)	Application Number	15687249
	Filing Date	2017-08-25
	First Named Inventor	David Strober
	Art Unit	2173
	Examiner Name	Darrin Hope
	Attorney Docket Number	41197.278581

	29	20110161396	A1	2011-06-30	Filbrich et al.	
	30	20110156879	A1	2011-06-30	Matsushita et al.	
	31	20110138354	A1	2011-06-09	HERTENSTEIN et al.	
	32	20110137729	A1	2011-06-09	Weisman et al.	
	33	20110131607	A1	2011-06-02	Thomas et al.	
	34	20110125594	A1	2011-05-26	Brown et al.	
	35	20110107227	A1	2011-05-05	Rempell et al.	
	36	20110090898	A1	2011-04-21	Patel et al.	
	37	20110084900	A1	2011-04-14	Jacobsen et al.	
	38	20110060998	A1	2011-03-10	Schwartz et al.	
	39	20110035692	A1	2011-02-10	Sandone et al.	

INFORMATION DISCLOSURE STATEMENT BY APPLICANT (Not for submission under 37 CFR 1.99)	Application Number	15687249
	Filing Date	2017-08-25
	First Named Inventor	David Strober
	Art Unit	2173
	Examiner Name	Darrin Hope
	Attorney Docket Number	41197.278581

	40	20110032870	A1	2011-02-10	Kumar	
	41	20110030020	A1	2011-02-03	Halttunen	
	42	20110014972	A1	2011-01-20	Herrmann et al.	
	43	20110007901	A1	2011-01-13	Ikeda et al.	
	44	20100325552	A1	2010-12-23	Sloo et al.	
	45	20100313135	A1	2010-12-09	Johnson et al.	
	46	20100283586	A1	2010-11-11	Ikeda et al.	
	47	20100281042	A1	2010-11-04	Windes et al.	
	48	20100265939	A1	2010-10-21	Parlamas et al.	
	49	20100208136	A1	2010-08-19	Castano	
	50	20100205628	A1	2010-08-12	Davis et al.	

INFORMATION DISCLOSURE STATEMENT BY APPLICANT (Not for submission under 37 CFR 1.99)	Application Number	15687249
	Filing Date	2017-08-25
	First Named Inventor	David Strober
	Art Unit	2173
	Examiner Name	Darrin Hope
	Attorney Docket Number	41197.278581

	51	20100198860	A1	2010-08-05	Burnett et al.	
	52	20100180307	A1	2010-07-15	Hayes et al.	
	53	20100174993	A1	2010-07-08	Pennington et al.	
	54	20100138746	A1	2010-06-03	Zarom	
	55	20100137028	A1	2010-06-03	FARRIS et al.	
	56	20100127847	A1	2010-05-27	Evans et al.	
	57	20100094900	A1	2010-04-15	Hughes, JR.	
	58	20100094728	A1	2010-04-15	Denning et al.	
	59	20100081375	A1	2010-04-01	Rosenblatt et al.	
	60	20100027974	A1	2010-02-04	Ansari	
	61	20090282470	A1	2009-11-12	YANG et al.	

INFORMATION DISCLOSURE STATEMENT BY APPLICANT (Not for submission under 37 CFR 1.99)	Application Number	15687249
	Filing Date	2017-08-25
	First Named Inventor	David Strober
	Art Unit	2173
	Examiner Name	Darrin Hope
	Attorney Docket Number	41197.278581

	62	20090259969	A1	2009-10-15	Pallakoff	
	63	20090259944	A1	2009-10-15	WU	
	64	20090254827	A1	2009-10-08	Gonze et al.	
	65	20090228919	A1	2009-09-10	Zott et al.	
	66	20090177989	A1	2009-07-09	Ma et al.	
	67	20090172780	A1	2009-07-02	Sukeda et al.	
	68	20090164641	A1	2009-06-25	Rogers et al.	
	69	20090108057	A1	2009-04-30	Mu et al.	
	70	20090100477	A1	2009-04-16	Jeffs	
	71	20090094331	A1	2009-04-09	NOBORI et al.	
	72	20090077467	A1	2009-03-19	ADAPPA et al.	

INFORMATION DISCLOSURE STATEMENT BY APPLICANT (Not for submission under 37 CFR 1.99)	Application Number	15687249
	Filing Date	2017-08-25
	First Named Inventor	David Strober
	Art Unit	2173
	Examiner Name	Darrin Hope
	Attorney Docket Number	41197.278581

	73	20090049373	A1	2009-02-19	Sharma et al.	
	74	20080301737	A1	2008-12-04	Hjelmeland Almas et al.	
	75	20080270881	A1	2008-10-30	Meyer et al.	
	76	20080267369	A1	2008-10-30	Parlamas et al.	
	77	20080250190	A1	2008-10-09	JOHNSON	
	78	20080216001	A1	2008-09-04	Ording et al.	
	79	20080189617	A1	2008-08-07	Covell et al.	
	80	20080187279	A1	2008-08-07	Gilley et al.	
	81	20080178198	A1	2008-07-24	Gauba	
	82	20080155600	A1	2008-06-26	Klappert et al.	
	83	20080140849	A1	2008-06-12	Collazo	

INFORMATION DISCLOSURE STATEMENT BY APPLICANT (Not for submission under 37 CFR 1.99)	Application Number	15687249
	Filing Date	2017-08-25
	First Named Inventor	David Strober
	Art Unit	2173
	Examiner Name	Darrin Hope
	Attorney Docket Number	41197.278581

	84	20080126943	A1	2008-05-29	Parasnis et al.	
	85	20080104267	A1	2008-05-01	Dawson	
	86	20080077526	A1	2008-03-27	Arumugam	
	87	20080040758	A1	2008-02-14	Beetcher et al.	
	88	20080034394	A1	2008-02-07	JACOBS et al.	
	89	20080028037	A1	2008-01-31	Moyer et al.	
	90	20080008439	A1	2008-01-10	Liu et al.	
	91	20070288715	A1	2007-12-13	Boswell et al.	
	92	20070202923	A1	2007-08-30	Jung et al.	
	93	20070157089	A1	2007-07-05	Van Os et al.	
	94	20070156855	A1	2007-07-05	Johnson	

INFORMATION DISCLOSURE STATEMENT BY APPLICANT (Not for submission under 37 CFR 1.99)	Application Number	15687249
	Filing Date	2017-08-25
	First Named Inventor	David Strober
	Art Unit	2173
	Examiner Name	Darrin Hope
	Attorney Docket Number	41197.278581

	95	20070155506	A1	2007-07-05	Malik	
	96	20070152980	A1	2007-07-05	Kocienda et al.	
	97	20070152978	A1	2007-07-05	Kocienda et al.	
	98	20070150963	A1	2007-06-28	Lee et al.	
	99	20070136778	A1	2007-06-14	Birger et al.	
	100	20070112785	A1	2007-05-17	Murphy et al.	
	101	20070094408	A1	2007-04-26	Gundla et al.	
	102	20070089147	A1	2007-04-19	Urdang et al.	
	103	20070083540	A1	2007-04-12	Gundla et al.	
	104	20070055986	A1	2007-03-08	Gilley et al.	
	105	20070052868	A1	2007-03-08	Chou et al.	

INFORMATION DISCLOSURE STATEMENT BY APPLICANT (Not for submission under 37 CFR 1.99)	Application Number	15687249
	Filing Date	2017-08-25
	First Named Inventor	David Strober
	Art Unit	2173
	Examiner Name	Darrin Hope
	Attorney Docket Number	41197.278581

	106	20070050054	A1	2007-03-01	Sambandam Guruparan et al.	
	107	20060265657	A1	2006-11-23	Gilley	
	108	20060263038	A1	2006-11-23	Gilley	
	109	20060203758	A1	2006-09-14	Tee et al.	
	110	20060200832	A1	2006-09-07	Dutton	
	111	20060101098	A1	2006-05-11	Morgan et al.	
	112	20060098624	A1	2006-05-11	Morgan et al.	
	113	20060083194	A1	2006-04-20	Dhrimaj et al.	
	114	20060062544	A1	2006-03-23	Southwood et al.	
	115	20050192096	A1	2005-09-01	Maehiro	
	116	20050149970	A1	2005-07-07	Fairhurst et al.	

INFORMATION DISCLOSURE STATEMENT BY APPLICANT (Not for submission under 37 CFR 1.99)	Application Number	15687249
	Filing Date	2017-08-25
	First Named Inventor	David Strober
	Art Unit	2173
	Examiner Name	Darrin Hope
	Attorney Docket Number	41197.278581

	117	20050144305	A1	2005-06-30	Fegan et al.	
	118	20050055716	A1	2005-03-10	Louie et al.	
	119	20050034151	A1	2005-02-10	Abramson	
	120	20050012723	A1	2005-01-20	Pallakoff	
	121	20040268451	A1	2004-12-30	Robbin et al.	
	122	20040268224	A1	2004-12-30	Balkus et al.	
	123	20040088728	A1	2004-05-06	Shimizu	
	124	20040056837	A1	2004-03-25	Koga et al.	
	125	20040049743	A1	2004-03-11	Bogward	
	126	20040008972	A1	2004-01-15	Haken	
	127	20030208765	A1	2003-11-06	Urdang et al.	

INFORMATION DISCLOSURE STATEMENT BY APPLICANT (Not for submission under 37 CFR 1.99)	Application Number	15687249
	Filing Date	2017-08-25
	First Named Inventor	David Strober
	Art Unit	2173
	Examiner Name	Darrin Hope
	Attorney Docket Number	41197.278581

	128	20030193520	A1	2003-10-16	Oetzel	
	129	20030182663	A1	2003-09-25	Gudorf et al.	
	130	20030142127	A1	2003-07-31	Markel	
	131	20030131251	A1	2003-07-10	Fetkovich	
	132	20030112268	A1	2003-06-19	Wettach	
	133	20030071792	A1	2003-04-17	Safadi	
	134	20030028565	A1	2003-02-06	Landsman et al.	
	135	20030023488	A1	2003-01-30	Landsman et al.	
	136	20030018885	A1	2003-01-23	Landsman et al.	
	137	20030005000	A1	2003-01-02	Landsman et al.	
	138	20030004804	A1	2003-01-02	Landsman et al.	

INFORMATION DISCLOSURE STATEMENT BY APPLICANT (Not for submission under 37 CFR 1.99)	Application Number	15687249
	Filing Date	2017-08-25
	First Named Inventor	David Strober
	Art Unit	2173
	Examiner Name	Darrin Hope
	Attorney Docket Number	41197.278581

	139	20020198778	A1	2002-12-26	Landsman et al.		
	140	20020146122	A1	2002-10-10	Vestergaard et al.		
	141	20020133518	A1	2002-09-19	Landsman et al.		
	142	20020129102	A1	2002-09-12	Landsman et al.		
	143	20020120666	A1	2002-08-29	Landsman et al.		
	144	20020083147	A1	2002-06-27	Ripperger		
	145	20020075332	A1	2002-06-20	GEILFUSS JR. et al.		
	146	20020034193	A1	2002-03-21	Patki et al.		
	147	20020021289	A1	2002-02-21	Combs et al.		

If you wish to add additional U.S. Published Application citation information please click the Add button. Add

FOREIGN PATENT DOCUMENTS Remove

Examiner Initial*	Cite No	Foreign Document Number[3]	Country Code[2] i	Kind Code[4]	Publication Date	Name of Patentee or Applicant of cited Document	Pages,Columns,Lines where Relevant Passages or Relevant Figures Appear	T[5]

EFS Web 2.1.18

INFORMATION DISCLOSURE STATEMENT BY APPLICANT (Not for submission under 37 CFR 1.99)		
	Application Number	15687249
	Filing Date	2017-08-25
	First Named Inventor	David Strober
	Art Unit	2173
	Examiner Name	Darrin Hope
	Attorney Docket Number	41197.278581

	1	101534449	CN	A	2009-09-16	ZHAN WU		
	2	101577650	CN	A	2009-11-11	GUANGZHOU HKUST R & D CORP LTD		
	3	101778198	CN	A	2010-07-14	SHANGHAI XIANGYUN INFORMATION SYSTEM CO., LTD		
	4	101815073	CN	A	2010-08-25	CHANGCHUN OPTICS FINE MECH		
	5	2175607	EP	A1	2010-04-14	NEC Corporation		
	6	2004356695	JP	A	2004-12-16	SONY CORP		
	7	2004100500	WO	A2	2004-11-18	THOMSON LICENSING S.A.		
	8	2008070050	WO	A2	2008-06-12	SWARMCAST, INC.		

If you wish to add additional Foreign Patent Document citation information please click the Add button Add

NON-PATENT LITERATURE DOCUMENTS Remove

Examiner Initials*	Cite No	Include name of the author (in CAPITAL LETTERS), title of the article (when appropriate), title of the item (book, magazine, journal, serial, symposium, catalog, etc), date, pages(s), volume-issue number(s), publisher, city and/or country where published.	T5
	1	Ask Search Internet Search, session identifier random, printed on 11/19/11	

EFS Web 2.1.18

INFORMATION DISCLOSURE STATEMENT BY APPLICANT (Not for submission under 37 CFR 1.99)	Application Number	15687249
	Filing Date	2017-08-25
	First Named Inventor	David Strober
	Art Unit	2173
	Examiner Name	Darrin Hope
	Attorney Docket Number	41197.278581

	2	Webopedia computer dictionary, session cookie, printed on 11/19/11	
	3	Webopedia computer dictionary, user session, printed on 11/19/11	
	4	www.vbulletin.com, Best way to generate Random, Unique ID's, printed on 11/19/11	
	5	www.vbulletin.com, Best way to generate Random, Unique ID's, Internet Archive Wayback Machine, January 16, 2009	
	6	Hachman, M. "Snapstick's Media Streaming App/Box: Hands On," www.pcmag.com/article2/0,2817,2375455,00.asp, 2 pages (January 8, 2011).	
	7	Dolcourt, J., CES: Snapstick takes on Apple TV, Google TV," http://news.cnet.com/8301-17938105-20025100-1.html, 3 pages. (December 9, 2010).	
	8	Snapstick-Home, "Snapstick," http://www.snapstick.com, 2 pages, printed on 3/12/2011.	
	9	Paul, I., Hands On: YouTube Leanback, PCWORLD http://www.pcworld.com/article/200769/hands_on_youtube_leanback.html, 3 pages. (Julyl 9, 2010).	
	10	Using AirPlay, Article HT4437, httQ://support.apple.com/kb/HT4437, 3 pages, (April 18, 2011).	
	11	Cheng, J., "Stream AirPlay video to regular TV? Apple might make it happen," http://arstechnica.com/apple/news/20II/03/stream-airplay-video-to-a-regular-tv-apple-might, 5 pages, 3/23/2011.	
	12	"Using the Play To feature to stream media", http://windows.microsoft.com/en-US/windows7/using-the-play-to-feature-to-stream-media, 3 pages, printed on 6/7/2011.	

INFORMATION DISCLOSURE STATEMENT BY APPLICANT (Not for submission under 37 CFR 1.99)	Application Number	15687249
	Filing Date	2017-08-25
	First Named Inventor	David Strober
	Art Unit	2173
	Examiner Name	Darrin Hope
	Attorney Docket Number	41197.278581

	13	"YouTube - Leanback", http:www.youtube.com/t/leanback, 1 page, printed on 6/7/2011.	
	14	Hu, C., et al., "Mobile Media Content Sharing in UPnP-Based Home Network Environment," Journal of Information Science and Engineering 24, 1753-1769. (2008).	
	15	Fallahkhair, S., et al., "Dual Device User interface Design for Ubiquitous Language Learning: Mobile Phone and Interactive Television (iTV)," Proceedings of the 2005 IEEE Int'l Workshop on Wireless and Mobile Technologies in Education, 8 pages, 2005.	
	16	bing search q=mobile+server +television+control&q 6-26-2014	
	17	bing search q=phone+server+television+control&qs 6-26-2014	
	18	bing search q=phone+server+television+control+me 6-26-2014	
	19	bing search q=mobile+server +television+control+m 6-26-2014	
	20	Webopedia computer dictionary, web identifier, printed on 11/19/11.	

If you wish to add additional non-patent literature document citation information please click the Add button Add

EXAMINER SIGNATURE

Examiner Signature		Date Considered	

*EXAMINER: Initial if reference considered, whether or not citation is in conformance with MPEP 609. Draw line through a citation if not in conformance and not considered. Include copy of this form with next communication to applicant.

[1] See Kind Codes of USPTO Patent Documents at www.USPTO.GOV or MPEP 901.04. [2] Enter office that issued the document, by the two-letter code (WIPO Standard ST.3). [3] For Japanese patent documents, the indication of the year of the reign of the Emperor must precede the serial number of the patent document. [4] Kind of document by the appropriate symbols as indicated on the document under WIPO Standard ST.16 if possible. [5] Applicant is to place a check mark here if English language translation is attached.

INFORMATION DISCLOSURE STATEMENT BY APPLICANT (Not for submission under 37 CFR 1.99)	Application Number	15687249
	Filing Date	2017-08-25
	First Named Inventor	David Strober
	Art Unit	2173
	Examiner Name	Darrin Hope
	Attorney Docket Number	41197.278581

CERTIFICATION STATEMENT

Please see 37 CFR 1.97 and 1.98 to make the appropriate selection(s):

That each item of information contained in the information disclosure statement was first cited in any communication from a foreign patent office in a counterpart foreign application not more than three months prior to the filing of the information disclosure statement. See 37 CFR 1.97(e)(1).

OR

☐ That no item of information contained in the information disclosure statement was cited in a communication from a foreign patent office in a counterpart foreign application, and, to the knowledge of the person signing the certification after making reasonable inquiry, no item of information contained in the information disclosure statement was known to any individual designated in 37 CFR 1.56(c) more than three months prior to the filing of the information disclosure statement. See 37 CFR 1.97(e)(2).

See attached certification statement.

The fee set forth in 37 CFR 1.17 (p) has been submitted herewith.

☒ A certification statement is not submitted herewith.

SIGNATURE

A signature of the applicant or representative is required in accordance with CFR 1.33, 10.18. Please see CFR 1.4(d) for the form of the signature.

Signature	/KEITH J. BAE/	Date (YYYY-MM-DD)	2019-12-12
Name/Print	Keith J. Bae	Registration Number	64633

This collection of information is required by 37 CFR 1.97 and 1.98. The information is required to obtain or retain a benefit by the public which is to file (and by the USPTO to process) an application. Confidentiality is governed by 35 U.S.C. 122 and 37 CFR 1.14. This collection is estimated to take 1 hour to complete, including gathering, preparing and submitting the completed application form to the USPTO. Time will vary depending upon the individual case. Any comments on the amount of time you require to complete this form and/or suggestions for reducing this burden, should be sent to the Chief Information Officer, U.S. Patent and Trademark Office, U.S. Department of Commerce, P.O. Box 1450, Alexandria, VA 22313-1450. DO NOT SEND FEES OR COMPLETED FORMS TO THIS ADDRESS. **SEND TO: Commissioner for Patents, P.O. Box 1450, Alexandria, VA 22313-1450.**

Privacy Act Statement

The Privacy Act of 1974 (P.L. 93-579) requires that you be given certain information in connection with your submission of the attached form related to a patent application or patent. Accordingly, pursuant to the requirements of the Act, please be advised that: (1) the general authority for the collection of this information is 35 U.S.C. 2(b)(2); (2) furnishing of the information solicited is voluntary; and (3) the principal purpose for which the information is used by the U.S. Patent and Trademark Office is to process and/or examine your submission related to a patent application or patent. If you do not furnish the requested information, the U.S. Patent and Trademark Office may not be able to process and/or examine your submission, which may result in termination of proceedings or abandonment of the application or expiration of the patent.

The information provided by you in this form will be subject to the following routine uses:

1. The information on this form will be treated confidentially to the extent allowed under the Freedom of Information Act (5 U.S.C. 552) and the Privacy Act (5 U.S.C. 552a). Records from this system of records may be disclosed to the Department of Justice to determine whether the Freedom of Information Act requires disclosure of these record s.

2. A record from this system of records may be disclosed, as a routine use, in the course of presenting evidence to a court, magistrate, or administrative tribunal, including disclosures to opposing counsel in the course of settlement negotiations.

3. A record in this system of records may be disclosed, as a routine use, to a Member of Congress submitting a request involving an individual, to whom the record pertains, when the individual has requested assistance from the Member with respect to the subject matter of the record.

4. A record in this system of records may be disclosed, as a routine use, to a contractor of the Agency having need for the information in order to perform a contract. Recipients of information shall be required to comply with the requirements of the Privacy Act of 1974, as amended, pursuant to 5 U.S.C. 552a(m).

5. A record related to an International Application filed under the Patent Cooperation Treaty in this system of records may be disclosed, as a routine use, to the International Bureau of the World Intellectual Property Organization, pursuant to the Patent Cooperation Treaty.

6. A record in this system of records may be disclosed, as a routine use, to another federal agency for purposes of National Security review (35 U.S.C. 181) and for review pursuant to the Atomic Energy Act (42 U.S.C. 218(c)).

7. A record from this system of records may be disclosed, as a routine use, to the Administrator, General Services, or his/her designee, during an inspection of records conducted by GSA as part of that agency's responsibility to recommend improvements in records management practices and programs, under authority of 44 U.S.C. 2904 and 2906. Such disclosure shall be made in accordance with the GSA regulations governing inspection of records for this purpose, and any other relevant (i.e., GSA or Commerce) directive. Such disclosure shall not be used to make determinations about individuals.

8. A record from this system of records may be disclosed, as a routine use, to the public after either publication of the application pursuant to 35 U.S.C. 122(b) or issuance of a patent pursuant to 35 U.S.C. 151. Further, a record may be disclosed, subject to the limitations of 37 CFR 1.14, as a routine use, to the public if the record was filed in an application which became abandoned or in which the proceedings were terminated and which application is referenced by either a published application, an application open to public inspections or an issued patent.

9. A record from this system of records may be disclosed, as a routine use, to a Federal, State, or local law enforcement agency, if the USPTO becomes aware of a violation or potential violation of law or regulation.

Espacenet

Bibliographic data: CN101534449 (A) — 2009-09-16

Receiving and transmitting method of a mobile digital broadcast television and used terminal

Inventor(s): ZHAN WU; KEXUE ZHU; GANG CHEN ± (WU ZHAN, ; ZHU KEXUE, ; CHEN GANG)

Applicant(s): ZHAN WU ± (WU ZHAN)

Classification: **- international:** ***H04H60/82; H04H60/91; H04L12/28; H04N21/436; H04N21/4402***
- cooperative:

Application number: CN20081034495 20080312

Priority number(s): CN20081034495 20080312

Abstract of CN101534449 (A)

A digital mobile broadcast television comprises digital multimedia broadcasting (DMB), ground digital video broadcast (DVB-H) used for handheld equipment, or a receiving and transmitting method of mobile television standard (MediaFLO) proposed by QUALCOMM and a DMB, DVB-H or MediaFLO terminal used in the method. In the receiving step of the method, a DMB, DVB-H or MedaFLO signal is received and converted into a video/audio frequency/multimedia data/IP data packet or system information; in the transmitting step, the fed video/audio frequency/multimedia data/IP data packet or system information is converted into a format that is suitable for the transmission to external equipment and then transmitted to the external equipment. The DMB, DVB-H or MediaFLO terminal comprises an independent power supply, a receiving submodule and a communication submodule which is a 2.4GHz Bluetooth submodule. In virtue of the Bluetooth submodule, various information data can be converted according to Bluetooth standards and transmitted through a wireless device.

[19] 中华人民共和国国家知识产权局

[12] 发明专利申请公布说明书

[21] 申请号 200810034495.4

[51] Int. Cl.
H04N 7/52 (2006.01)
H04N 5/44 (2006.01)
H04H 60/82 (2008.01)
H04H 60/91 (2008.01)
H04L 12/28 (2006.01)

[43] 公开日 2009 年 9 月 16 日

[11] 公开号 CN 101534449A

[22] 申请日 2008.3.12

[21] 申请号 200810034495.4

[71] 申请人 吴 湛

地址 201102 上海市闵行区古美七村 14 号 502 室

共同申请人 朱克学 陈 钢

[72] 发明人 吴 湛 朱克学 陈 钢

[74] 专利代理机构 上海天翔知识产权代理有限公司

代理人 吕 伴

权利要求书 8 页 说明书 26 页 附图 8 页

[54] 发明名称

移动数字广播电视的接收并传送的方法及所使用的终端

[57] 摘要

一种数字移动广播电视包括数字多媒体广播(DMB)或用于手持设备的地面数字视频广播(DVB-H)或高通公司(QUALCOMM)提出的移动电视标准(MediaFLO)的接收并传送的方法及该方法所使用的 DMB 或 DVB-H 终端或 MediaFLO 终端，方法中的接收步骤接收 DMB 或 DVB-H 信号或 MediaFLO 信号并且转换成为视频/音频/多媒体数据/IP 数据包或系统信息；传送步骤将馈送过来的视频/音频/多媒体数据/IP 数据包或系统信息转换为适合于传输到外部设备的一种格式并传送至外部设备。DMB 或 DVB-H 终端或 MediaFLO 终端包括独立的电源和接收子模块及通信子模块，通信子模块为 2.4GHz 蓝牙子模块，通过蓝牙通信子模块，各种信息数据可以按照蓝牙标准转换并且通过无线装置发送。

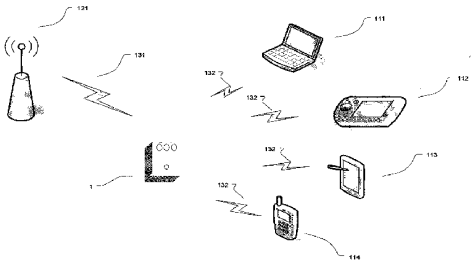

1、数字多媒体广播(DMB)的接收并传送的方法，其特征在于，包括：

接收步骤，该步骤接收 DMB 信号并且转换这些信号成为包含移动视频流媒体、 DAB 声音帧和服务信息以及快速信息频道(FCI)频道的各种信息数据信号；

传送步骤，将馈送过来的包含移动视频流媒体、 DAB 声音帧和服务信息以及的快速信息频道(FCI)频道的各种信息数据信号转换为适合于传输到外部设备的一种格式并传送至外部设备。

2、用于手持设备的地面数字视频广播(DVB-H)的接收并传送的方法，其特征在于，包括：

接收步骤，该步骤接收 DVB-H 信号并且转换这些信号成为包含视频流或音频流或其他数据对象的 IP 数据包；

传送步骤，将馈送过来的包含视频流或音频流或其他数据对象的 IP 数据包转换为适合于传输到外部设备的一种格式并传送至外部设备。

3、高通公司(QUALCOMM)提出的移动电视标准 (MediaFLO)的接收并传送的方法，其特征在于，包括：

接收步骤，该步骤接收 MediaFLO 信号并且转换这些信号成为包含多媒体数据流（视频流、音频流）、非实时数据、IP 数据包和系统信息的各种信息数据信号；

传送步骤，将馈送过来的多媒体数据流（视频流、音频流）、非实时数据、IP 数据包和系统信息转换为适合于传输到外部设备的一种格式并传送至外部设备。

4、如权利要求 1 或 2 或 3 所述的方法，其特征在于：所述接收步骤和所述传送步骤是在一具有一独立电源的终端中完成的。

5、如权利要求 1 或 2 或 3 所述的方法，其特征在于：所述传送步骤中，采用有线或无线的方式进行传送。

6、如权利要求 5 所述的方法，其特征在于：所述无线传送方式包含蓝牙无线传送方式或 Wi-Fi 无线传送方式。

7、一种如权利要求 1 所述的方法所使用的 DMB 终端，是用于实现上述数字多媒体广播接收步骤和传送步骤的 DMB 终端，其特征在于，该终端具有一独立的电源并包括：

接收子模块，该接收子模块将接收 DMB 信号并且转换这些信号成为包含移动视频流媒体、 DAB 声音帧和服务信息以及快速信息频道(FCI)频道的各种信息数据信号；

通信子模块，该通信子模块将接收模块馈送过来的包含移动视频流媒体、 DAB 声音帧和服务信息以及快速信息频道(FCI)频道的各种信息数据信号转换为适合于传输到外部设

备的一种格式并传送至外部设备。

壳体，该壳体用来承装所述接收子模块和通信子模块以及电源，其中电源为所述接收子模块和所述通信子模块供电。

8、如权利要求 7 所述的 DMB 终端，其特征在于：还包括一微处理器，所述微处理器与接收子模块和通信子模块连接，对接收子模块和通信子模块的工作状态进行设置，接收接收子模块送出的包含移动视频流媒体、DAB 声音帧和服务信息以及快速信息频道(FCI)频道的各种信息数据；并将这些数据传递给通信子模块进行编码甚至压缩。

9、如权利要求 7 或 8 所述的 DMB 终端，其特征在于：所述接收子模块包括一用于接收 DMB 信号（BandIII(174~240Mhz)或 L-Band(1452~1492Mhz)）并且转换这些信号成为基带电路可接收的中频或低频信号的射频电路接收调谐部分，和一接收这些中频或低频信号并转换成为包含移动视频流媒体、DAB 声音帧和服务信息以及快速信息频道(FCI)频道的各种信息数据信号的基带电路部分。

10、如权利要求 9 所述的 DMB 终端，其特征在于：在接收子模块中，所述基带电路部分转换成为的包含移动视频流媒体、DAB 声音帧和服务信息以及快速信息频道(FCI)频道的各种信息数据信号可以通过一个射频电路发送。

11、如权利要求 9 所述的 DMB 终端，其特征在于：在接收子模块中，所述射频电路接收调谐部分连接一天线，用作接收 DMB 信号。

12、如权利要求 7 或 8 所述的 DMB 终端，其特征在于：所述通信子模块包括一用于接收包含控制或配置数据信号并传送包含移动视频流媒体、 DAB 声音帧和服务信息以及快速信息频道(FCI)频道的各种信息数据信号的射频电路部分，和一与射频电路部分双向连接并可按照一定格式标准发送和接收信号的基带带路部分。

13、一种如权利要求 2 所述的方法所使用的 DVB-H 终端，是用于实现上述地面数字视频广播的接收步骤和传送步骤的 DVB-H 终端，其特征在于，该 DVB-H 终端具有一独立的电源并包括：

接收子模块，该接收子模块将接收 DVB-H 信号并且转换这些信号成为包含视频流或音频流或其他数据对象的 IP 数据包；

通信子模块，该通信子模块将接收模块馈送过来的包含视频流或音频流或其他数据对象的 IP 数据包转换为适合于传输到外部设备的一种格式并传送至外部设备。

壳体，该壳体用来承装所述接收子模块和通信子模块以及电源，其中电源为所述接收子模块和所述通信子模块供电。

14、如权利要求 13 所述的 DVB-H 终端，其特征在于：还包括一微处理器，所述微处理器与接收子模块和通信子模块连接，对接收子模块和通信子模块的工作状态进行设置，接收接收子模块送出的包含视频流或音频流或其他数据对象的 IP 数据包；并将这些数据传递给通信子模块进行编码甚至压缩。

15、如权利要求 13 或 14 所述的 DVB-H 终端，其特征在于：所述接收子模块包括一用于接收 VHF(174~230Mhz)和/或 UHF(470~838Mhz)的 DVB-H 信号并且转换这些信号成为基带电路可接收的中频或低频信号的射频电路接收调谐部分，和一接收这些中频或低频信号并转换成为包含视频流或音频流或其他数据对象的 IP 数据包的基带电路部分。

16、如权利要求 15 所述的 DVB-H 终端，其特征在于：在接收子模块中，所述基带电路部分转换成为的包含视频流或音频流或其他数据对象的 IP 数据包通过一个射频电路发送。

17、如权利要求 15 所述的 DVB-H 终端，其特征在于：在接收子模块中，所述射频电路接收调谐部分连接一天线，用作接收 DVB-H 信号。

18、如权利要求 13 或 14 所述的 DVB-H 终端，其特征在于：所述通信子模块包括一用于接收包含控制或配置数据信号并传送包含包含视频流或音频流或其他数据对象的 IP 数据包的射频电路部分，和一与射频电路部分双向连接并可按照一定格式标准发送和接收信号的的基带带路部分。

19、一种如权利要求 3 所述的方法所使用的 MediaFLO 终端，是用于实现上述高通公司(QUALCOMM)提出的移动电视标准接收步骤和传送步骤的 MediaFLO 终端，其特征在于，该终端具有一独立的电源并包括：

接收子模块，该接收子模块将接收 FLO 信号并且转换这些信号成为多媒体数据流（视频流、音频流）、非实时数据、IP 数据包和系统信息；

通信子模块，该通信子模块将接收模块馈送过来的多媒体数据流（视频流、音频流）、非实时数据、IP 数据包和系统信息转换为适合于传输到外部设备的一种格式并传送至外部设备。

壳体，该壳体用来承装所述接收子模块和通信子模块以及电源，其中电源为所述接收子模块和所述通信子模块供电。

20、如权利要求 19 所述的 MediaFLO 接收终端，其特征在于，还包括一微处理器，所述微处理器与接收子模块和通信子模块连接，对接收子模块和通信子模块的工作状态进行设置，接收接收子模块送出的多媒体数据流（视频流、音频流）、非实时数据、IP 数据包和系统信息；并将这些数据传递给通信子模块进行编码甚至压缩。

21、如权利要求 19 或 20 所述的 FLO 接收终端，其特征在于，所述接收子模块包括一用于接收 FLO 信号（VHF(174~230Mhz) 和／或 UHF(470~838Mhz) 和／或 L-Band(L1（1452-1492MHz）和 L2（1660-1685MHz））)并且转换这些信号成为基带电路可接收的中频或低频信号的射频电路接收调谐部分，和一接收这些中频或低频信号并转换成为多媒体数据流（视频流、音频流)、非实时数据、IP 数据包和系统信息信号的基带电路部分。

22、如权利要求 21 所述的 MediaFLO 接收终端，其特征在于，所述基带电路部分转换成为的多媒体数据流（视频流、音频流)、非实时数据、IP 数据包和系统信息通过一个射频电路发送。

23、如权利要求 21 所述的 MediaFLO 接收终端，其特征在于，所述射频电路接收调谐部分连接一天线，用作接收 FLO 信号。

24、如权利要求 19 或 20 所述的 MediaFLO 接收终端，其特征在于，所述通信子模块包括一用于接收包含控制或配置数据信号并传送多媒体数据流（视频流、音频流)、非实时数据、IP 数据包和系统信息信号的射频电路部分，和一与射频电路部分双向连接并可按照一定格式标准发送和接收信号的的基带带路部分。

25、如权利要求 7 或 8 所述的 DMB 终端，其特征在于：所述电源中包括一电源管理模块，所述电源管理模块与电池、接收子模块、通信子模块以及微处理器连接，电源管理模块由电池接收电能，并转化为接收子模块、通信子模块以及微处理器所需要的不同工作电压。

26、如权利要求 13 或 14 所述的 DVB-H 终端，其特征在于：所述电源中包括一电源管理模块，所述电源管理模块与电池、接收子模块、通信子模块以及微处理器连接，电源管理模块由电池接收电能，并转化为接收子模块、通信子模块以及微处理器所需要的不同工作电压。

27、如权利要求 19 或 20 所述的 MediaFLO 接收终端，其特征在于，所述电源中包括一电源管理模块，所述电源管理模块与电池、接收子模块、通信子模块以及微处理器连接，电源管理模块由电池接收电能，并转化为接收子模块、通信子模块以及微处理器所需要的不同工作电压。

28、如权利要求 25 所述的 DMB 终端，其特征在于：在电源管理模块中，还可以接一电池状态指示灯。电源管理模块同时侦测电池容量，当电池容量太低不足以使系统正常工作时控制电池状态指示灯为警告状态，以提醒用户更换电池。

29、如权利要求 26 所述的 DVB-H 终端，其特征在于：在电源管理模块中，还可以接一电池状态指示灯。电源管理模块同时侦测电池容量，当电池容量太低不足以使系统正常工

作时控制电池状态指示灯为警告状态，以提醒用户更换电池。

30、如权利要求 27 所述的 MediaFLO 接收终端，其特征在于，在电源管理模块中，接一电池状态指示灯；电源管理模块同时侦测电池容量，当电池容量太低不足以使系统正常工作时控制电池状态指示灯为警告状态，以提醒用户更换电池。

31、如权利要求 7 或 8 所述的 DMB 终端，其特征在于：所述通信子模块可以采用有线或无线的方式将信号传送至外部设备。

32、如权利要求 13 或 14 所述的 DVB-H 终端，其特征在于：所述通信子模块可以采用有线或无线的方式将信号传送至外部设备。

33、如权利要求 19 或 20 所述的 MediaFLO 接收终端，其特征在于，所述通信子模块采用有线或无线的方式将信号传送至外部设备。

34、如权利要求 8 所述的 DMB 终端，其特征在于：所述接收子模块处理所得的信息数据可以通过微处理器和外部电路连接馈送给外部设备。

35、如权利要求 14 所述的 DVB-H 终端，其特征在于：所述接收子模块处理所得的信息数据可以通过微处理器和外部电路连接馈送给外部设备。

36、如权利要求 20 所述的 MediaFLO 接收终端，其特征在于，所述接收子模块处理所得的信息数据可以通过微处理器和外部电路连接馈送给外部设备。

37、如权利要求 8 所述的 DMB 终端，其特征在于：所述微处理器包含实现通信子模块与外部设备双向传输的接口电路。

38、如权利要求 14 所述的 DVB-H 终端，其特征在于：所述微处理器包含实现通信子模块与外部设备双向传输的接口电路。

39、如权利要求 20 所述的 MediaFLO 接收终端，其特征在于，所述微处理器包含具实现通信子模块与外部设备双向传输的接口电路。

40、如权利要求 8 所述的 DMB 终端，其特征在于：所述微处理器内设置有休眠/唤醒模式，当微处理器处于休眠状态时，所述的接收子模块与通信子模块处于省电状态，同时微处理器自身也进入省电但是又能够接收带唤醒信号的状态；当微处理器接收到唤醒信号时，微处理器首先自身恢复到工作状态，然后设置接收子模块与通信子模块和电源管理模块到工作状态。

41、如权利要求 14 所述的 DVB-H 终端，其特征在于：所述微处理器内设置有休眠/唤醒模式，当微处理器处于休眠状态时，所述的接收子模块与通信子模块处于省电状态，同时微处理器自身也进入省电但是又能够接收带唤醒信号的状态；当微处理器接收到唤醒信

号时，微处理器首先自身恢复到工作状态，然后设置接收子模块与通信子模块和电源管理模块到工作状态。

42、如权利要求 20 所述的 MediaFLO 接收终端，其特征在于，所述微处理器内设置有休眠/唤醒模式，当微处理器处于休眠状态时，所述的接收子模块与通信子模块处于省电状态，同时微处理器自身也进入省电但是又能够接收带唤醒信号的状态；当微处理器接收到唤醒信号时，微处理器首先自身恢复到工作状态，然后设置接收子模块与通信子模块和电源管理模块到工作状态。

43、如权利要求 40 所述的 DMB 终端，其特征在于：所述微处理器的休眠与唤醒状态通过一连接在微处理器上的休眠/唤醒状态切换开关开实现的。

44、如权利要求 41 所述的 DVB-H 终端，其特征在于：所述微处理器的休眠与唤醒状态通过一连接在微处理器上的休眠/唤醒状态切换开关开实现的。

45、如权利要求 42 所述的 MediaFLO 接收终端，其特征在于，所述微处理器的休眠与唤醒状态通过一连接在微处理器上的休眠/唤醒状态切换开关开实现的。

46、如权利要求 8 所述的 DMB 终端，其特征在于：所述微处理器还连接了一个接收子模块状态指示灯与一个通信子模块状态指示灯。

47、如权利要求 14 所述的 DVB-H 终端，其特征在于：所述微处理器还连接了一个接收子模块状态指示灯与一个通信子模块状态指示灯。

48、如权利要求 20 所述的 MediaFLO 接收终端，其特征在于，所述微处理器还连接了一个接收子模块状态指示灯与一个通信子模块状态指示灯。

49、如权利要求 8 所述的 DMB 终端，其特征在于：所述微处理器还包括一存储器，微处理器把用户对接收子模块设置的数据保存在存储器中。

50、如权利要求 14 所述的 DVB-H 终端，其特征在于：所述微处理器还包括一存储器，微处理器把用户对接收子模块设置的数据保存在存储器中。

51、如权利要求 20 所述的 MediaFLO 接收终端，其特征在于，所述微处理器还包括一存储器，微处理器把用户对接收子模块设置的数据保存在存储器中。

52、在上述结构的通信子模块中，所述基带带路部分可以对发送和接受的信号编码和解码。

53、如权利要求 7 或 8 所述的 DMB 终端，其特征在于：在通信子模块中，所述射频电路部分连接一天线，用作接收和发送一定格式的信号。

54、如权利要求 13 或 14 所述的 DVB-H 终端，其特征在于：在通信子模块中，所述射

频电路部分连接一天线，用作接收和发送一定格式的信号。

55、如权利要求 19 或 20 所述的 MediaFLO 接收终端，其特征在于，所述射频电路部分连接一天线，用作接收和发送一定格式的信号。

56、如权利要求 7 或 8 所述的 DMB 终端，其特征在于：所述通信子模块包括蓝牙(Bluetooth)子模块或者包括 Wi-Fi 子模块。

57、如权利要求 13 或 14 所述的 DVB-H 终端，其特征在于：所述通信子模块包括蓝牙(Bluetooth)子模块或者包括 Wi-Fi 子模块。

58、如权利要求 19 或 20 所述的 MediaFLO 接收终端，其特征在于，所述通信子模块包括蓝牙(Bluetooth)子模块或者包括 Wi-Fi 子模块。

59、如权利要求 7 或 8 所述的 DMB 终端，其特征在于：在通信子模块中，所述蓝牙子模块或 Wi-Fi 子模块为对按照所述蓝牙标准或 Wi-Fi 标准编码的信号进行接收和解码的蓝牙子模块或 Wi-Fi 子模块。

60、如权利要求 13 或 14 所述的 DVB-H 终端，其特征在于：在通信子模块中，所述蓝牙子模块或 Wi-Fi 子模块为对按照所述蓝牙标准或 Wi-Fi 标准编码的信号进行接收和解码的蓝牙子模块或 Wi-Fi 子模块。

61、如权利要求 19 或 20 所述的 MediaFLO 终端，其特征在于：在通信子模块中，所述蓝牙子模块或 Wi-Fi 子模块为对按照所述蓝牙标准或 Wi-Fi 标准编码的信号进行接收和解码的蓝牙子模块或 Wi-Fi 子模块。

62、如权利要求 7 或 8 所述的 DMB 终端，其特征在于：当通信子模块为对按照所述蓝牙标准或 Wi-Fi 标准编码的信号进行接收和解码的蓝牙子模块或 Wi-Fi 子模块时，所述微处理器负责读取蓝牙子模块或 Wi-Fi 子模块接收到蓝牙通信或 Wi-Fi 通信的另一方传递来的控制或配置数据并转化为接收子模块可以识别的格式，再馈送给接收子模块进行配置或控制。

63、如权利要求 13 或 14 所述的 DVB-H 终端，其特征在于：当通信子模块为对按照所述蓝牙标准或 Wi-Fi 标准编码的信号进行接收和解码的蓝牙子模块或 Wi-Fi 子模块时，所述微处理器负责读取蓝牙子模块或 Wi-Fi 子模块接收到蓝牙通信或 Wi-Fi 通信的另一方传递来的控制或配置数据并转化为接收子模块可以识别的格式，再馈送给接收子模块进行配置或控制。

64、如权利要求 19 或 20 所述的 MediaFLO 接收终端，其特征在于，所述蓝牙子模块或 Wi-Fi 子模块为对按照所述蓝牙标准或Wi-Fi 标准编码的信号进行接收和解码的蓝牙子模块

或 Wi-Fi 子模块，所述微处理器负责读取蓝牙子模块或 Wi-Fi 子模块接收到蓝牙通信或 Wi-Fi 通信的另一方传递来的控制或配置数据并转化为接收子模块可以识别的格式，再馈送给接收子模块进行配置或控制。

移动数字广播电视的接收并传送的方法及所使用的终端

技术领域

本发明涉及一种信号接收及传送技术领域，特别涉及用于接收 DMB（数字多媒体广播）信号或 DVB-H（用于手持设备的地面数字视频广播）信号或 MediaFLO（高通公司(QUALCOMM)提出的移动电视标准）信号并且解码输出视频/音频/多媒体数据/IP 数据包或系统信息的移动数字广播电视的接收并传送的方法及所使用的终端。该终端可以使用现有的多种通信技术，如蓝牙或 Wi-Fi 通信技术与其他使用蓝牙或 Wi-Fi 的设备进行通信。

背景技术

数字多媒体广播(DMB)是从数字音频广播(DAB)发展起来的，采用完全不同于调幅、调频广播的技术，具有突出的移动接收能力和高质量的声音(CD 质量)，并且可实现多媒体接收如视频和字符的数字数据、可加密、发射功率小、覆盖面积大、频谱利用率高、有很强的抗干扰和在恶劣环境下接收的能力,并可利用卫星大幅度提高广播的覆盖率等优点。与 DAB 相比，DMB 以强调包括视频而非音频广播的各种多媒体服务。

DMB 系统由发射系统和接收机两部分组成。在发射系统，构成 DMB 视频服务的移动视频流媒体(可以为 MPEG2-TS 格式、WMV 格式、RM 格式或其他格式)在流模式数字子频道与包模式数据、DAB 声音帧和服务信息都经过能量扩散扰频器(Energy dispersal scrambler)、FEC 编码和空间交织后通过多路复用器复用，形成主服务频道（MSC)；主服务频道与包含服务信息(SI)、快速信息数据频道(FIDC)和复用配置信息(MCI)的快速信息频道(FCI)通过发送帧复用器复用后，与频道同步信号一起进行正交频分复用调制，送入射频部分进行载波调制并发射。系统接收部分则是发射部分的逆过程。接收机首先由调谐器调谐从天线进入的高频信号，滤掉无用的频谱部分，并向下变频到 OFDM 可以接收的中频或低频信号频段；OFDM 基带解调器接收中频或低频信号，进行 A/D 变换后，得到数字信号，数字信号经过 I/Q 变换，得到两路正交的信号，该信号通过信道同步和信道均衡后，送入 OFDM 解调器进行基带解调，然后通过解复用器并进行时间解交织和频率解交织、解 FEC 码和解扰(解能量扩散)，得到移动视频流媒体、 DAB 声音帧和服务信息以及的快速信息频道(FCI)频道的各种信息。

同样，DVB-H 是 DVB(数字视频广播)组织为通过地面数字广播网络向便携/手持终端提

供多媒体业务所制定的传输标准，在 DVB-T(地面数字电视广播系统)传输系统基础上，DVB-T 使用与增加了一定的附加功能和改进技术，包括通过时间切片来减少耗电，通过使用

MPE-FEC 来增强鲁棒性和纠错能量，使用 IP(Internet Protocol)协议来广播声音、图片和其他数据，使手机等便携设备能够稳定的接收广播电视信号。在传输 MPEG-2 传输流，用 OFDM 调制信号等特点上，DVB-H 如同 DVB-T 一样。通过 DVB-H 系统，除了视频流和音频流的广播外，还可以传送文件。

DVB-H 系统由发射系统和接收机两部分组成。在发射系统，构成 DVB 视频服务的视频流媒体首先打包为 IP 数据包，然后按照多协议封装(MPE)进行封装，经过前向纠错编码(FEC)，然后进行时间分片(time-slicing)，与其他服务信息一起形成传输流，并可能与其他 MPEG2-TS 传输流一起通过多路复用器复用后，经过能量扩散扰动和符合交织，最后进行正交频分复用调制，送入射频部分进行载波调制并发射。系统接收部分则是发射部分的逆过程。接收机首先由调谐器调谐从天线进入的高频信号，滤掉无用的频谱部分，并向下变频到 OFDM 可以接收的中频或低频信号频段；OFDM 基带解调器接收中频或低频信号，进行 A/D 变换后，得到数字信号，数字信号经过 I/Q 变换，得到两路正交的信号，该信号通过信道同步和信道均衡后，送入 OFDM 解调器进行基带解调，然后进行符合解交织、解扰(解能量扩散)并通过解复用器，得到传输流，然后通过 IP 去封装器（IP-Decapsulator）选择解码期望的时间片段、进行纠错和解 MPE 包，最后得到包含视频流或音频流或其他数据对象的 IP 数据包。

MediaFLO是由高通提出的移动电视标准，基于“仅限于下行传输”（FLO）技术，是专门为手机电视开发的多播系统。FLO技术采用各种技术来同时优化功耗、频率分集和时间分集。FLO采用了4K模式的OFDM调制技术，每个子载波的调制可以选择QPSK或者16-QAM,同时采用了Turbo码和Reed Solomon码，一个特定的调制模式的相对性能由所选择的调制方式、Turbo码和RS编码速率决定。FLO通过优化的导频和交织器结构设计来实现快速频道切换，采用时分复用方式在FLO波形中特定的时间间隔内传输各个频道的节目内容数据，使终端接收器可以仅对感兴趣的单个逻辑信道进行解调，以降低功耗。使用分层调制，FLO数据流在信源编码时被分为基础层和增强层。对于基础层，所有用户均可进行解码；而对于增强层，只有信噪比(SNR)较高的区域才能进行解码，以提供尽可能高质量的业务。移动终端也可以同时解调多个逻辑信道，使得视频和相关的音频可以同时传播。 FLO空中接口支持5、6、7和8MHz的频率带宽，FLO可部署在多个频段上，包括VHF（174-240MHz）/UHF（470-862MHz）/L-Band(L1（1452-1492MHz）和L2（1660-1685MHz）),分别使用不同的带宽和发射功率级别。FLO支持在同一射频信道内局域和广域节目内容共存。

MediaFLO 系统由四个子系统组成，即网络运营中心、FLO 发射机、3G 网络和支持

MediaFLO 的终端组成。与空中接口相关的是 FLO 发射系统和接收终端。

在发射系统，系统信息、实时多媒体数据流、非实时数据和 IP 数据包形成超帧，超帧中的数据信道占据了超帧的大部分，携带了多播的多媒体信息。多媒体信息比特流组织为多播逻辑信道，组成多播逻辑信道的数据包经过 RS 编码和 Turbo 编码，然后进行字节交织，再进行加扰，然后进行符号调制，再进行交织，并映射到子载波，最后进行正交频分复用调制，送入射频部分发射。接收机首先由调谐器调谐从天线进入的高频信号，滤掉无用的频谱部分，并向下变频到 OFDM 可以接收的中频或低频信号频段；OFDM 基带解调器接收中频或低频信号，进行 A/D 变换后，得到数字信号，数字信号经过 I/Q 变换，得到两路正交的信号，该信号通过信道同步和信道均衡后，送入 OFDM 解调器进行基带解调，然后进行解码、解交织、解扰(解能量扩散)、纠错，最后得到超帧的多播逻辑信道，取出多媒体数据流（视频流、音频流)、非实时数据和 IP 数据包。

蓝牙英文名为 Bluetooth，是近距离无线通信技术标准（IEEE802.15)，工作在 2.4GHz 频带，带宽为 1Mb/s。蓝牙技术工作在不需(频率占用)许可证的波段(2.402 到 2.4835GHz)，短距离通过无线连接传输无损声音和数据。蓝牙特别利益集团（SIG）公布的蓝牙正式规范 1.2 版的蓝牙协议支持 1 兆字节每秒的速率和 10 米的传输距离，但蓝牙数据包的数据头占用了一定容量，所以实际传输速率只有 723 千字节每秒。2004 年 11 月通过许可的蓝牙 2.0 理论上 3 兆字节每秒的传输速率，并且直线有效距离可达到 250 米，可以用在大数据吞吐量需要的场合，比如传输 CD 音质的流媒体文件，数码相片和激光打印等。现在市场上有大量的支持蓝牙 1.2 协议产品，比如 PDA、手机、电脑、无线耳机、车载免提设备等，其中手机应用最多。2005 年 12 月支持此 2.0 协议的第一批设备已经出现在市场上，包括应用在手机上。

Wi-Fi 技术代表“无线保真”，指 802.11 标准的 IEEE802.11b 子集。1999 年 9 月，电子和电气工程师协会(IEEE)批准了 IEEE 802.11b 规范，这个规范也称为 Wi-Fi。IEEE 802.11b 定义了用于在共享的无线局域网（WLAN）进行通信的物理层和媒体访问控制（MAC）子层。在物理层，IEEE 802.11b 采用 2.45 GHz 的无线频率，最大的位速率达 11 Mbps，传输距离可达 100 米使用直接序列扩频（DSSS）传输技术。IEEE 802.11 定义了两种运作模式：特殊（Ad hoc）模式和基础（Infrastructure）模式。在 Ad hoc 模式（也称为点对点模式）下，无线客户端直接相互通信（不使用无线 AP)。使用 Ad hoc 模式通信的两个或多个无线客户端就形成了一个独立基础服务集（Independent Basic Service Set，IBSS)。Ad hoc 模式用于在没有提供无线 AP 时连接无线客户端，因此支持 Wi-Fi 的产品之间可以通过 Ad hoc

直接连接通信。现在市场上有大量的包含 Wi-Fi 技术的产品，主要是 PDA、笔记本电脑、和部分手机。

目前，支持手机电视的网络包括了数字多媒体广播(DMB)、用于手持设备的地面数字视频广播 (DVB-H)和高通公司(QUALCOMM)提出的移动电视标准 (MediaFLO)，数字多媒体广播又包括卫星广播和地面广播两类。支持数字多媒体广播网、用于手持设备的地面数字视频广播或高通公司(QUALCOMM)提出的移动电视标准 (MediaFLO)的手机或其他手持设备一般有两种实现方法，一是外接式的 DMB 接收模块或 DVB-H 接收模块，利用 SDIO 接口、CF 卡接口，直接连接到 PDA 或手机或其他手持设备；另一个应用是直接将 DMB 接收模块、DVB-H 接收模块或 MediaFLO 接收模块集成到手机或其他手持设备中。

所需要的接收、调谐和解调的 DMB 接收机模块是已知的，解调出的数据传递给一个接口用于进一步在系统的其他单元处理。例如手机或其他手持设备的软件系统中集成接收模块的驱动程序和多媒体应用程序，把 DMB 接收到的移动视频流媒体、 DAB 声音帧和服务信息以及的快速信息频道(FCI)频道的各种信息转换为用户可以直接使用的格式。

同样，所需要的接收、调谐和解调的 DVB-H 接收机模块是已知的，解调出的 IP 数据包传递给一个接口用于进一步在系统的其他单元处理。例如手机或其他手持设备的软件系统中集成接收模块的驱动程序和视频应用程序，把 DVB-H 接收到的包含视频流或音频流或其他数据对象的 IP 数据包转换为用户可以直接使用的格式。

同样，所需要的接收、调谐和解调的 MediaFLO 接收机模块是已知的，解调出的多媒体数据流（视频流、音频流）、非实时数据、IP 数据包和系统信息传递给一个接口用于进一步在系统的其他单元处理。例如手机或其他手持设备的软件系统中集成接收模块的驱动程序和视频应用程序，把 MediaFLO 接收到的解调出的多媒体数据流（视频流、音频流）、非实时数据、IP 数据包和系统信息转换为用户可以直接使用的格式。

然而，目前支持数字多媒体广播网或用于手持设备的地面数字视频广播或高通公司(QUALCOMM)提出的移动电视标准 (MediaFLO)的手机或其他手持设备这两种解决方案都有几个共同的技术缺点。第一，接收信号的容易受到影响。当使用环境在建筑物内时，接收的信号可能会比较差，如果采用较大的天线，对手持设备特别是手机的使用带来不便。第二，手持设备的耗电增加很多。在手持设备尤其是手机中，省电一直是个最重要的课题，如现有的接收模块的调谐器的功耗都比较大,减少了手持设备尤其是手机的电池使用时间。第三，在其他设计不变的情况下，增加 DMB 接收模块或 DVB-H 接收模块或 MediaFLO 接收模块，对直接将 DMB 或 DVB-H 或 MediaFLO 接收模块集成到设备中的手机或其他手持设备产品

来说，产品的尺寸会增加，对使用 SDIO 或 CF 接口 DMB 或 DVB-H 接收模块产品来说，由于现有的 DMB 接收模块或 DVB-H 接收模块都不足够小，从而要超出手机或手持设备产品的正常轮廓，这两种情况对于注重产品尺寸的手持产品尤其是手机来说都是不利因素。

另外，对于已经有手机或手持设备的用户来说，其产品必须有 SDIO、CF 或其他接口或者必须更换为集成这种接口的产品或者更换为集成 DMB 接收模块或 DVB-H 接收模块的新产品，才能够使用数字多媒体广播或用于手持设备的地面数字视频广播系统提供的服务。对于已经有手机或手持设备的用户来说，现在没有办法能够支持其产品集成 MediaFLO 接收模块，如果不更换手机或手持设备，不能够使用高通公司(QUALCOMM)提出的移动电视标准系统提供的服务。这样对于数字多媒体广播系统或用于手持设备的地面数字视频广播或高通公司(QUALCOMM)提出的移动电视标准推广是不利的因素。也增加了消费者的负担。

综上所述，市场上迫切需要一种能够改善接收信号、耗电和尺寸问题，并且充分利用用户已有手机或其他手持设备能够灵活升级为支持接收数字多媒体广播或用于手持设备的地面数字视频广播或高通公司(QUALCOMM)提出的移动电视标准 (MediaFLO)服务的产品的方案。

发明内容

本发明的目的是在这些情况下提供一种更简单的连接 DMB 接收模块或 DVB-H 接收模块或 FLO 接收模块到手机或其他手持电子设备的数字多媒体广播或用于手持设备的地面数字视频广播或 MediaFLO 服务的接收并传送的方法及所使用的终端，该方法及所使用的终端能够在不增加产品尺寸的情况下，相对现有的连接 DMB 接收模块或 DVB-H 接收模块或 FLO 接收模块的手机或其他手持电子设备，更好的解决耗电问题，和在很多情况下提供更好的接收信号。

作为本发明第一方面的数字多媒体广播(DMB)的接收并传送的方法，其特征在于，包括：

接收步骤，该步骤接收 DMB 信号并且转换这些信号成为包含移动视频流媒体、 DAB 声音帧和服务信息以及快速信息频道(FCI)频道的各种信息数据信号；

传送步骤，将馈送过来的包含移动视频流媒体、 DAB 声音帧和服务信息以及快速信息频道(FCI)频道的各种信息数据信号转换为适合于传输到外部设备的一种格式并传送至外部设备。

作为本发明第二方面的用于手持设备的地面数字视频广播(DVB-H)的接收并传送的方法，其特征在于,包括：

接收步骤，该步骤接收 DVB-H 信号并且转换这些信号成为包含视频流或音频流或其他数据对象的 IP 数据包；

传送步骤，将馈送过来的包含视频流或音频流或其他数据对象的 IP 数据包转换为适合于传输到外部设备的一种格式并传送至外部设备。

作为本发明第三方面的用于高通公司(QUALCOMM)提出的移动电视标准 (MediaFLO)的接收并传送的方法，其特征在于,包括：

接收步骤，该步骤接收 FLO 信号并且转换这些信号成为多媒体数据流（视频流、音频流）、非实时数据、IP 数据包和系统信息；

传送步骤，将馈送过来的多媒体数据流（视频流、音频流）、非实时数据、IP 数据包和系统信息转换为适合于传输到外部设备的一种格式并传送至外部设备。

在上述的接收并传送的方法中所述接收步骤和所述传送步骤是在一具有一独立电源的终端中完成的。

在上述的接收并传送的方法的所述传送步骤中，可以采用有线或无线的方式进行传送。所述无线传送方式包含蓝牙无线传送方式或 Wi-Fi 无线传送方式。

作为本发明第四方面的一种终端，是用于实现上述数字多媒体广播接收步骤和传送步骤的 DMB 终端，其特征在于，该 DMB 终端具有一独立的电源并包括：

接收子模块，该接收子模块将接收 DMB 信号并且转换这些信号成为包含移动视频流媒体、 DAB 声音帧和服务信息以及快速信息频道(FCI)频道的各种信息数据信号；

通信子模块，该通信子模块将接收模块馈送过来的包含移动视频流媒体、 DAB 声音帧和服务信息以及快速信息频道(FCI)频道的各种信息数据信号转换为适合于传输到外部设备的一种格式并传送至外部设备；

壳体，该壳体用来承装所述接收子模块和通信子模块以及电源，其中电源为所述接收子模块和所述通信子模块供电。

在上述结构的 DMB 终端中，还包括一微处理器，所述微处理器与接收子模块和通信子模块连接，对接收子模块和通信子模块的工作状态进行设置，接收接收子模块送出的包含移动视频流媒体、 DAB 声音帧和服务信息以及快速信息频道(FCI)频道的各种信息数据；并将这些数据传递给通信子模块进行编码甚至压缩。

在上述结构的 DMB 终端中，所述接收子模块包括一用于接收 DMB 信号（BandIII (174~240Mhz)或 L-Band(1452~1492Mhz)）并且转换这些信号成为基带电路可接收的中频或低频信号的射频电路接收调谐部分，和一接收这些中频或低频信号并转换成为包含移动视

频流媒体、DAB 声音帧和服务信息以及快速信息频道(FCI)频道的各种信息数据信号的基带电路部分。

在上述结构的 DMB 终端的接收子模块中，所述基带电路部分转换成为的包含移动视频流媒体、DAB 声音帧和服务信息以及快速信息频道(FCI)频道的各种信息数据信号可以通过通信子模块的射频电路发送。

在上述结构的 DMB 终端的接收子模块中，所述射频电路接收调谐部分连接一天线，用作接收 DMB 信号。

在上述结构的 DMB 终端中，所述通信子模块包括一用于接收包含控制或配置数据信号并传送包含移动视频流媒体、DAB 声音帧和服务信息以及快速信息频道(FCI)频道的各种信息数据信号的射频电路部分，和一与射频电路部分双向连接并可按照一定格式标准发送和接收信号的的基带带路部分。

作为本发明第五方面的另一种终端，是用于实现上述用于手持设备的地面数字视频广播的接收步骤和传送步骤的 DVB-H 终端，其特征在于，该 DVB-H 终端具有一独立的电源并包括：

接收子模块，该接收子模块将接收 DVB-H 信号并且转换这些信号成为包含视频流或音频流或其他数据对象的 IP 数据包；

通信子模块，该通信子模块将接收模块馈送过来的包含视频流或音频流或其他数据对象的 IP 数据包转换为适合于传输到外部设备的一种格式并传送至外部设备。

壳体，该壳体用来承装所述接收子模块和通信子模块以及电源，其中电源为所述接收子模块和所述通信子模块供电。

在上述结构的 DVB-H 终端中，还包括一微处理器，所述微处理器与接收子模块和通信子模块连接，对接收子模块和通信子模块的工作状态进行设置，接收接收子模块送出的包含视频流或音频流或其他数据对象的 IP 数据包；并将这些数据传递给通信子模块进行编码甚至压缩。

在上述结构的 DVB-H 终端中，所述接收子模块包括一用于接收 VHF(174~230Mhz)或 UHF(470~838Mhz)的 DVB-H 信号并且转换这些信号成为基带电路可接收的中频或低频信号的射频电路接收调谐部分，和一接收这些中频或低频信号并转换成为包含视频流或音频流或其他数据对象的 IP 数据包的基带电路部分。

在上述结构的 DVB-H 终端的接收子模块中，所述基带电路部分转换成为的包含视频流或音频流或其他数据对象的 IP 数据包可以通过通信子模块的射频电路发送。

在上述结构的 DVB-H 终端的接收子模块中，所述射频电路接收调谐部分连接一天线，用作接收 DVB-H 信号。

在上述结构的 DVB-H 终端中，所述通信子模块包括一用于接收包含控制或配置数据信号并传送包含包含视频流或音频流或其他数据对象的 IP 数据包的射频电路部分，和一与射频电路部分双向连接并可按照一定格式标准发送和接收信号的的基带带路部分。

作为本发明第六方面的另一种终端，是用于实现上述高通公司(QUALCOMM)提出的移动电视标准 (MediaFLO)的接收步骤和传送步骤的 MediaFLO 终端，其特征在于，该 MediaFLO 终端具有一独立的电源并包括：

接收子模块，该接收子模块将接收 MediaFLO 信号并且转换这些信号成为多媒体数据流（视频流、音频流）、非实时数据、IP 数据包和系统信息；

通信子模块，该通信子模块将接收模块馈送过来的多媒体数据流（视频流、音频流）、非实时数据、IP 数据包和系统信息转换为适合于传输到外部设备的一种格式并传送至外部设备。

壳体，该壳体用来承装所述接收子模块和通信子模块以及电源，其中电源为所述接收子模块和所述通信子模块供电。

在上述结构的 MediaFLO 终端中，还包括一微处理器，所述微处理器与接收子模块和通信子模块连接，对接收子模块和通信子模块的工作状态进行设置，接收接收子模块送出的多媒体数据流（视频流、音频流）、非实时数据、IP 数据包和系统信息；并将这些数据传递给通信子模块进行编码甚至压缩。

在上述结构的 MediaFLO 终端中，所述接收子模块包括一用于接收 VHF(174~230Mhz)或 UHF(470~838Mhz)或 L-Band(L1（1452-1492MHz）和 L2（1660-1685MHz））的 MediaFLO 信号并且转换这些信号成为基带电路可接收的中频或低频信号的射频电路接收调谐部分，和一接收这些中频或低频信号并转换成为多媒体数据流（视频流、音频流）、非实时数据、IP 数据包和系统信息的基带电路部分。

在上述结构的 MediaFLO 终端的接收子模块中，所述基带电路部分转换成为的多媒体数据流（视频流、音频流）、非实时数据、IP 数据包和系统信息可以通过通信子模块的射频电路发送。

在上述结构的 MediaFLO 终端的接收子模块中，所述射频电路接收调谐部分连接一天线，用作接收 MediaFLO 信号。

在上述结构的 MediaFLO 终端中，所述通信子模块包括一用于接收包含控制或配置数据

信号并传送多媒体数据流（视频流、音频流）、非实时数据、IP 数据包和系统信息的射频电路部分，和一与射频电路部分双向连接并可按照一定格式标准发送和接收信号的的基带带路部分。

在上述结构的 DMB 终端或 DVB-H 终端或 MediaFLO 接收终端中，所述电源中包括一电源管理模块，所述电源管理模块与电池、接收子模块、通信子模块以及微处理器连接，电源管理模块由电池接收电能，并转化为接收子模块、通信子模块以及微处理器所需要的不同工作电压。

在上述结构的电源管理模块中，还可以接一电池状态指示灯。电源管理模块同时侦测电池容量，当电池容量太低不足以使系统正常工作时控制电池状态指示灯为警告状态，以提醒用户更换电池。

在上述结构的 DMB 终端或 DVB-H 终端或 MediaFLO 接收终端中，所述通信子模块可以采用有线或无线的方式将信号传送至外部设备。

在上述结构的 DMB 终端或 DVB-H 终端或 MediaFLO 接收终端中，所述接收子模块处理所得的信息数据可以通过微处理器和外部电路连接馈送给外部设备。

所述微处理器包含实现通信子模块与外部设备双向传输的接口电路。

在上述结构的 DMB 终端或 DVB-H 终端或 MediaFLO 接收终端中，所述微处理器内设置有休眠/唤醒模式，当微处理器处于休眠状态时，所述的接收子模块与通信子模块处于省电状态，同时微处理器自身也进入省电但是又能够接收带唤醒信号的状态；当微处理器接收到唤醒信号时，微处理器首先自身恢复到工作状态，然后设置接收子模块与通信子模块和电源管理模块到工作状态。

在上述结构的 DMB 终端或 DVB-H 终端或 MediaFLO 接收终端中，所述微处理器的休眠与唤醒状态通过一连接在微处理器上的休眠/唤醒状态切换开关开实现的。用户可以通过切换开关来通知微处理器进入休眠或唤醒状态。

在上述结构的 DMB 终端或 DVB-H 终端或 MediaFLO 接收终端中，所述微处理器还连接了一个接收子模块状态指示灯与一个通信子模块状态指示灯。当接收子模块在正常工作时，微处理器设置接收子模块状态指示灯为亮，当接收子模块处于省电状态时，微处理器设置接收子模块状态指示灯为暗，当接收子模块在不能正常的工作状态时，微处理器设置接收子模块状态指示灯为闪烁。同样地，当通信子模块分别在正常工作状态、省电状态或不正常的工作状态时，微处理器分别设置通信子模块状态指示灯为亮、暗或闪烁。

在上述结构的 DMB 终端或 DVB-H 终端或 MediaFLO 接收终端中，所述微处理器还包括一

存储器，微处理器把用户对接收子模块设置的数据保存在存储器中。这样，当用户在断开通信子模块与对应通信的外部设备连接后，再一次的连接时微处理器默认使用上次保存的配置数据。

在上述结构的通信子模块中，所述基带带路部分可以对发送和接受的信号编码和解码。

在上述结构的通信子模块中，所述射频电路部分连接一天线，用作接收和发送一定格式的信号。

上述结构的 DMB 终端或 DVB-H 终端或 MediaFLO 接收终端中，所述通信子模块包括蓝牙(Bluetooth)子模块或者包括 Wi-Fi 子模块。

在上述结构的通信子模块中，所述蓝牙子模块或 Wi-Fi 子模块为对按照所述蓝牙标准或 Wi-Fi 标准编码的信号进行接收和解码的蓝牙子模块或 Wi-Fi 子模块。

当通信子模块为对按照所述蓝牙标准或 Wi-Fi 标准编码的信号进行接收和解码的蓝牙子模块或 Wi-Fi 子模块时，所述微处理器负责读取蓝牙子模块或 Wi-Fi 子模块接收到蓝牙通信或 Wi-Fi 通信的另一方传递来的控制或配置数据并转化为接收子模块可以识别的格式，再馈送给接收子模块进行配置或控制。

由于采用了如上的设计方案，本发明允许与那些具有用于所述格式的对应通信接口的外部设备一起使用 DMB 接收终端或 DVB-H 终端或 MediaFLO 接收终端。这样，具有对应通信接口的外部设备，例如手机，不用做任何硬件的更改就可以使用数字多媒体广播或用于手持设备的地面数字视频广播或 MediaFLO 的服务，也不需要对原来的尺寸做任何改变。而且由于本发明的终端可以做成有自己的电池或电源的产品，使得与该终端通信的具有对应通信接口的外部设备在接收数字多媒体广播(DMB)或用于手持设备的地面数字视频广播(DVB-H) 或 MediaFLO 服务时不用提供终端所需的电能。另外，由于所述通信子模块相互通信的距离在 10 米(如蓝牙 1.2)或 100 米(如 Wi-Fi)或 250 米(如蓝牙 2.0)，可将采用本发明的终端放置在较容易接收到数字多媒体广播(DMB)或用于手持设备的地面数字视频广播(DVB-H) 或 MediaFLO 信号的地方，然后再通过通信子模块将视频/音频/多媒体数据/IP 数据包或系统信息发送给对应通信接口的外部设备。

由于通信子模块是蓝牙(Bluetooth)子模块或者 Wi-Fi 子模块，通过它，所述解调制得到的视频/音频/多媒体数据/IP 数据包或系统信息可以按照蓝牙标准或 Wi-Fi 标准转换并且通过无线装置发送。按照蓝牙标准(BT 标准) 或 Wi-Fi 标准的一种通信子模块在这方面是特别有利的，因为已经有大量的手持电子设备包括手机、掌上游戏机和 PDA 已经具有蓝牙和/或 Wi-Fi 的接口，而且越来越多的设备正在成为具有蓝牙接口标准的设备。

另外通信子模块可以采用设计成对按照所述BT标准或Wi-Fi标准编码的信号进行接收和解码的蓝牙子模块或Wi-Fi 子模块，这样本发明的终端不仅可以接收DMB信号或DVB-H信号或MediaFLO信号而且可以接收来自其它外部设备的数据，并且在适当的情况下可以因此相应地被控制。

本发明的终端中的接收子模块具有射频电路接收调谐部分和基带电路部分，可以用于处理接收的DMB信号(BandIII(174~240Mhz)，L-Band(1452~1492Mhz))或DVB-H信号(VHF(174~230Mhz),UHF(470~838Mhz)或MediaFLO信号(VHF(174-240MHz)/UHF(470-862MHz)/L-Band(L1（1452-1492MHz）和L2（1660-1685MHz）))以及处理要在至少一个射频发送的BT信号或Wi-Fi信号，通信子模块具有射频电路部分和基带电路部分，可以用以处理接收和发送的BT信号(2.402~2.4835GHz)或Wi-Fi信号(2.45 GHz)，可以使本发明的终端格外微型化。

在本发明的终端中，设置一接口电路，通过它，解调得到的视频/音频/多媒体数据/IP数据包或系统信息可以馈送给一个外部导线连接的设备，实现有线的传输。另外将接口电路设计成从外部设备到所述子模块的数据的线路传输模式。这样允许本发明的终端和不具有按照蓝牙和Wi-Fi标准的接口的外部设备之间的数据的线路传输。

在本发明的终端中，使用的微处理器设置有“休眠”和“唤醒”两种模式，在所述休眠时令其只消耗微量电流，唤醒后即正常工作。这样可以使本发明的终端更省电。

在本发明的终端中，通过设置接受子模块状态指示灯、通信子模块指示灯和电池状态指示灯，可用指示灯不同的发光状态，来分别表示接收子模块、通信子模块以及电池的不同工作状态。

在本发明的终端中，通过存储器存储，可以动态存储用户上次的设置，便于在下次用户使用时自动调用用户上次的设置。

附图说明

以下结合附图和具体实施方式来进一步描述本发明，但本发明的技术方案并不局限于下面附图和具体实施方式的描述。

图1为本发明在接收及传送数字多媒体广播方面应用的一个示意图。

图2为本发明在接收及传送用于手持设备的地面数字视频广播方面应用的一个示意图。

图3为本发明DMB终端的第一实施例的一个示意图。

图4为本发明DMB终端的第二实施例的一个示意图。

图 5 为本发明 DMB 终端的一个产品实施例的硬件功能方块图。

图 6 为本发明 DMB 终端的的一个产品实施例的 DMB 数据通信流程示意图。

图 7 为本发明 DVB-H 终端的第一实施例的一个示意图。

图 8 为本发明 DVB-H 终端的第二实施例的一个示意图。

图 9 为本发明 DVB-H 终端的一个产品实施例的硬件功能方块图。

图 10 为本发明 DVB-H 终端的的一个产品实施例的 DVB-H 数据通信流程示意图。

图 11 为本发明在接收及传送高通公司(QUALCOMM)提出的移动电视标准 (MediaFLO)应用的一个示意图。

图 12 为本发明 MediaFLO 终端的第一实施例的一个示意图。

图 13 为本发明 MediaFLO 终端的第二实施例的一个示意图。

图 14 为本发明 MediaFLO 终端的一个产品实施例的硬件功能方块图;

图 15 为本发明 MediaFLO 终端的的一个产品实施例的 MediaFLO 数据通信流程示意图;

图中：1 为 DMB 终端，1a 为 DVB-H 终端，1b 为 MediaFLO 终端，2 为 DMB 终端的接收子模块，21 为 DMB 终端的接收子模块的射频电路接收调谐部分，22 为 DMB 终端的接收子模块的基带电路部分，2a 为 DVB-H 终端的接收子模块，21a 为 DVB-H 终端的接收子模块的射频电路接收调谐部分，22a 为 DVB-H 终端的接收子模块的基带电路部分，2b 为 MediaFLO 终端的接收子模块，21b 为 MediaFLO 终端的接收子模块的射频电路接收调谐部分，22b 为 MediaFLO 终端的接收子模块的基带电路部分，3 为 DMB 终端的通信子模块，31 为 DMB 终端的通信子模块的射频电路部分，32 为 DMB 终端的通信子模块的基带电路部分，3a 为 DVB-H 终端的通信子模块，31a 为 DVB-H 终端的通信子模块的射频电路部分，32a 为 DVB-H 终端的通信子模块的基带电路部分，3b 为 MediaFLO 终端的通信子模块，31b 为 MediaFLO 终端的通信子模块的射频电路部分，32b 为 MediaFLO 终端的通信子模块的基带电路部分，4 为 DMB 终端的接收子模块接收的天线，4a 为 DVB-H 终端的接收子模块接收的天线，4b 为 MediaFLO 终端的接收子模块接收的天线，5 为 DMB 终端的通信子模块接收和发射的天线，5a 为 DVB-H 终端的通信子模块接收和发射的天线，5b 为 MediaFLO 终端的通信子模块接收和发射的天线，6 为 DMB 终端的微处理器和对外接口电路，61 为 DMB 终端的接口电路的外部导线连接，6a 为 DVB-H 终端的微处理器和对外接口电路，61a 为 DVB-H 终端的接口电路的外部导线连接，6b 为 MediaFLO 终端的微处理器和对外接口电路，61b 为 MediaFLO 终端的接口电路的外部导线连接，7 为 DMB 终端的供电电路，71 为 DMB 终端的电池，72 为 DMB 终端的电源管理模块，7a 为 DVB-H 终端的供电电路，71a 为 DVB-H 终端的电池，72a 为 DVB-H 终端的电源管理

模块，7b 为 MediaFLO 终端的供电电路，71b 为 MediaFLO 终端的电池，72b 为 MediaFLO 终端的电源管理模块，8 为 DMB 终端的接收子模块和通信子模块的公共子模块，81 为 DMB 终端的公共子模块的射频电路部分，82 为 DMB 终端的公共子模块的基带电路部分，8a 为 DVB-H 终端的接收子模块和通信子模块的公共子模块，81a 为 DVB-H 终端的公共子模块的射频电路部分，82a 为 DVB-H 终端的公共子模块的基带电路部分，8b 为 MediaFLO 终端的接收子模块和通信子模块的公共子模块，81b 为 MediaFLO 终端的公共子模块的射频电路部分，82b 为 MediaFLO 终端的公共子模块的基带电路部分，9 为 DMB 终端的微处理器，91 为 DMB 终端的接收子模块状态指示灯，92 为 DMB 终端的通信子模块状态指示灯，93 为 DMB 终端的电池状态指示灯，9a 为 DVB-H 终端的微处理器，91a 为 DVB-H 终端的接收子模块状态指示灯，92a 为 DVB-H 终端的通信子模块状态指示灯，93a 为 DVB-H 终端的电池状态指示灯，9b 为 MediaFLO 终端的微处理器，91b 为 MediaFLO 终端的接收子模块状态指示灯，92b 为 MediaFLO 终端的通信子模块状态指示灯，93b 为 MediaFLO 终端的电池状态指示灯，10 为 DMB 终端的休眠/唤醒状态切换开关，10a 为 DVB-H 终端的休眠/唤醒状态切换开关，10b 为 MediaFLO 终端的休眠/唤醒状态切换开关，111 为带有蓝牙功能的笔记本电脑，112 为带有蓝牙功能的 PMP，113 为带有蓝牙功能的 PDA，114 为带有蓝牙功能的智能手机，121 为 DMB 发射台，121a 为 DVB-H 发射台，121b 为 MediaFLO 发射台，131 为 DMB 调制信号，131a 为 DVB-H 调制信号，131b 为 MediaFLO 调制信号，132 为蓝牙调制信号，221 为解调过的视频/音频/多媒体业务数据，221a 为解调过的包含视频/音频的 IP 数据包，221b 为解调过的多媒体数据流（视频流、音频流）、非实时数据、IP 数据包和系统信息，222 为 DMB 终端的状态/控制数据，222a 为 DVB-H 终端的状态/控制数据，222b 为 MediaFLO 终端的状态/控制数据。

具体实施方式

图 1 中给出的本发明数字多媒体广播的接收并传送的方法应用的一个示意图。

DMB 接收的终端 1 从 DMB 发射台接收数字多媒体广播调制信号 131 并且转换数字多媒体广播调制信号 131 成为包含移动视频流媒体、DAB 声音帧和服务信息以及快速信息频道(FCI)频道的各种信息数据；然后将馈送过来的包含移动视频流媒体、 DAB 声音帧和服务信息以及的快速信息频道(FCI)频道的各种信息数据转换为蓝牙调制信号 132，与带有蓝牙功能的笔记本电脑 111、带有蓝牙功能的 PMP112、带有蓝牙功能的 PDA113 或带有蓝牙功能的智能手机 114 通信。

当然也可以将馈送过来的包含移动视频流媒体、 DAB 声音帧和服务信息以及快速信息

频道(FCI)频道的各种信息数据转换为 Wi-Fi 信号，与带有 Wi-Fi 功能的笔记本电脑、带有 Wi-Fi 功能的 PMP、带有 Wi-Fi 功能的 PDA 或带有 Wi-Fi 功能的智能手机通信。

图 2 中给出的本发明用于手持设备的地面数字视频广播的接收并传送的方法应用的一个示意图。

DVB-H 接收的终端 1a 从 DVB-H 发射台接收用于手持设备的地面数字视频广播调制信号 131a，如 VHF(174~230Mhz)或 UHF(470~838Mhz)的 DVB-H 信号，并且转换成为包含视频流或音频流或其他数据对象的 IP 数据包；然后将馈送过来的包含视频流或音频流或其他数据对象的 IP 数据包转换为蓝牙调制信号 132，与带有蓝牙功能的笔记本电脑 111、带有蓝牙功能的 PMP112、带有蓝牙功能的 PDA113 或带有蓝牙功能的智能手机 114 通信。

当然也可以将馈送过来的包含视频流或音频流或其他数据对象的 IP 数据包转换为 Wi-Fi 信号，与带有 Wi-Fi 功能的笔记本电脑、带有 Wi-Fi 功能的 PMP、带有 Wi-Fi 功能的 PDA 或带有 Wi-Fi 功能的智能手机通信。

图 3 示出按照本发明的 DMB 接收的终端 1 的第一实施例，其中包括一个 DMB 接收的终端 1 的接收子模块 2 以及一个通信子模块 3，它按照已知的蓝牙（BT）标准操作。当然也可以按照已知的 Wi-Fi 标准操作。

按照已知的蓝牙（BT）标准操作时，DMB 接收的终端 1 的接收子模块 2 具有一个用于接收 DMB 信号(BandⅢ(174~240Mhz)和/或 L-Band(1452~1492Mhz))并且转换这些信号成为基带电路部分 22 可接收的中频或低频信号的射频电路接收调谐部分 21。这些中频或低频信号通过一个连接到射频电路接收调谐部分 21 的基带电路部分 22 转换成为包含移动视频流媒体、DAB 声音帧和服务信息以及快速信息频道(FCI)频道的各种信息数据。此过程在背景技术部分已简单介绍。已知用于此目的的各种信号处理方法，这里就不进一步解释了。

BT 的通信子模块 3 包括一个用于在蓝牙频带（BT 频带）接收并且传输信号的射频电路部分 31，它大约位于 2400 和 2483.5Mhz 之间的频率范围，还包括一个 BT 的基带电路部分 32，它具有一个对射频电路部分 31 的双向连接并且要按照 BT 标准发送和接收的 BT 信号通过 BT 的基带电路部分 32 被编码和解码，并且必要时被压缩和解压。用于此目的的信号处理方法也是已知的，因此这里就不进一步解释了。

接收子模块 2 的射频电路接收调谐部分 21 连接到一个天线 4。天线 4 用作终端 1 的接收 DMB 信号。

通信子模块 3 的射频电路部分 31 连接到一个天线 5。天线 5 用作接收和发送蓝牙信号。

接收子模块 2 和通信子模块 3 的两个基带电路部件 22、32 连接到一个微处理器和对外

接口电路 6，该接口电路 6 可以设计在微处理器 9 中，通过它接收子模块 2 和通信子模块 3 可以彼此交换数据，如同它们可以通过一个外部线路连接 61 与外部设备（未示出）交换数据。接收子模块 2 和通信子模块 3 设计为独立功能单元。

因此，借助于 DMB 接收的终端 1 的接收子模块 2，DMB 信号可以被接收、转换成为包含移动视频流媒体、 DAB 声音帧和服务信息以及快速信息频道(FCI)频道的各种信息数据，这些信息数据然后经微处理器和对外接口电路 6 馈送到 BT 的通信子模块 3，以便在转换为根据 BT 标准编码的信号之后，经天线 5 将这些数据发送到另一设备（例如，一个智能手机、一个 PDA 等），该另一设备具有用于对 BT 编码信号进行接收和解码的接口。该设备可以进一步处理从它所接收的 BT 编码信号，得到包含移动视频流媒体、 DAB 声音帧和服务信息以及快速信息频道(FCI)频道的各种信息数据，然后送给运行于此设备的应用程序以转换为用户可以直接使用的格式(图像、声音、视频或其他信息)。

另一方面，所示 DMB 信号处理所得的信息数据还可以通过微处理器和对外接口电路 6 和外部线路连接 61 馈送给不具有蓝牙接口的设备（例如通过通用串行总线(USB)馈送给一台 PC 机）。

而且还有可能通过天线 5 和通信子模块 3，从其它按照 BT 标准编码的设备接收 BT 信号，所示 BT 信号然后被转换到基带、被解码并通过微处理器和对外接口电路 6 和外部线路连接 61 馈送到一个被连接的用于控制和/或数据通信的设备。相反地，微处理器和对外接口电路 6 还可设计用于从外部设备到子模块 3 的数据的线路传输。

DMB 接收的终端 1 连接到供电电路 7，特别地，供电电路 7 包括可以拆卸的电池或不可拆卸的充电电池。

图 4 示出按照本发明的终端 1 的第二个实施例，其中图 1 中所示的分离的接收子模块 2 和通信子模块 3 结合成一个公共子模块 8。

该公共子模块 8 包括一个分别用于 DMB 信号和 BT 信号的公共射频电路部分 81，与一个公共基带电路部分 82 一起，公共射频电路部分 81 合并射频电路接收调谐部分部份 21 和射频电路部分 31 的功能，公共基带电路部分 82 合并了按照图 3 的基带电路部分 22 和 32 的功能。

另外，这里也提供如同第一实施例中所示的一个天线 4 和一个天线 5，天线 4 用作接收 DMB 信号，天线 5 用于接收和发送蓝牙信号。同时，在第二实施例中，如上解释，也有一个微处理器和对外接口电路 6，用于通过外部线路连接 61 与其它设备的双向连接。

最后，在第二实施例中，如上解释，也有与供电电路 7 连接的接口。

第二实施例的基本功能和它的应用范围与第一实施例的相同，因此，就不在此解释了。

第二实施例的特别优点是它可以小型化到一个十分显著的程度，导致进一步降低制造费用并且扩大应用范围。

图 5 示出采用此 DMB 接收的终端 1 的一个产品实施例的硬件功能方块图，其中 DMB 接收的终端 1 的射频电路接收调谐部分 21 是独立的电路部件，DMB 接收的终端 1 的基带电路部分 22 也是独立的电路部件。

蓝牙通信子模块 3 作为独立的电路部件合并了蓝牙的射频电路部分 31 和基带电路部分 32。天线 4 用于接收 L-Band(1452~1492Mhz)的 DMB 信号并传递给天线 4 连接的 DMB 的接收子模块 2 的射频电路接收调谐部分 21。天线 5 用于接收和发送 2400 和 2483.5Mhz 之间的蓝牙信号并传递给天线 5 连接的蓝牙通信子模块 3。

微处理器 9 连接了 DMB 的接收子模块 2 的基带电路部分 22 和蓝牙通信子模块 3，微处理器 9 负责设置 DMB 的接收子模块 2 的基带电路部分 22 和蓝牙通信子模块 3 到可以工作的状态，接收 DMB 接收的终端 1 的接收子模块 2 的基带电路部分 22 送出的包含移动视频流媒体、DAB 声音帧和服务信息以及快速信息频道(FCI)频道的各种信息数据，并将这些数据传递给蓝牙通信子模块 3 进行编码甚至有可能压缩。相反地，当通过天线 5, 蓝牙通信子模块 3 接收到蓝牙通信的另一方传递来的控制或配置数据时，微处理器 9 负责读取这些数据并转化为 DMB 接收的终端 1 的接收子模块 2 的基带电路部分 22 可以识别的格式，然后传递给 DMB 接收的终端 1 的接收子模块 2 的基带电路部分 22 进行配置或控制。

微处理器 9 另外连接了休眠/唤醒状态切换开关 10，用户可以通过休眠/唤醒状态切换开关 10 的状态来通知微处理器 9 要进入休眠或唤醒的状态。当微处理器 9 接收到休眠/唤醒状态切换开关 10 通知的休眠信号时，设置蓝牙通信子模块 3、DMB 接收的终端 1 的接收子模块 2 的基带电路部分 22、DMB 接收的终端 1 的接收子模块 2 的射频电路接收调谐部分 21 和电源管理模块 72 到省电状态，同时微处理器 9 自身也进入到省电但是又能够接收休眠/唤醒状态开关 10 的唤醒信号的状态；当微处理器 9 接收到休眠/唤醒状态切换开关 10 通知的休眠信号时，微处理器 9 首先自身恢复到工作状态，然后设置蓝牙通信子模块 3、DMB 接收的终端 1 的接收子模块 2 的基带电路部分 22、DMB 的接收子模块 2 的射频电路接收调谐部分 21 和电源管理模块 72 到工作状态。

微处理器 9 另外连接了 DMB 接收的终端 1 的接收子模块状态指示灯(一个发光二级管)91 和蓝牙通信子模块状态指示灯(一个发光二级管)92。当 DMB 接收的终端 1 的接收子模块 2 的基带电路部分 22 和射频电路接收调谐部分 21 在正常工作时，微处理器 6 设置 DMB 接收

的终端 1 的接收子模块状态指示灯 91 为亮，当 DMB 接收的终端 1 的接收子模块 2 的基带电路部分 22 和射频电路接收调谐部分 21 在省电状态时，微控制器 9 设置 DMB 的接收子模块状态指示灯 91 为暗，当 DMB 接收的终端 1 的接收子模块 2 的基带电路部分 22 和射频电路接收调谐部分 21 在不能正常的工作状态时，微处理器 9 设置 DMB 接收的终端 1 的接收子模块状态指示灯 91 为闪烁。同样地，当蓝牙通信子模块 3 分别在正常工作状态、省电状态或不正常的工作状态时，微处理器 9 分别设置蓝牙通信子模块状态指示灯 92 为亮、暗、或闪烁。

最后，微处理器 9 把用户上次对 DMB 接收的终端 1 的接收子模块 2 的基带电路部分 22 设置的数据保存在微处理器 9 内部连接的存储器中。这样，当用户在断开蓝牙通信子模块 3 与对应通信的蓝牙模块的连接后，再一次的连接时微处理器 9 默认使用上次保存的配置数据。

电源管理模块 72 连接了电池 71、蓝牙通信子模块 3、DMB 接收的终端 1 的接收子模块 2 的基带电路部分 22 和射频电路接收调谐部分 21、微处理器 6 和电池状态指示灯(一个发光二级管)93。电源管理模块 72 由电池 71 接收电能，并转化出蓝牙子模块 3、DMB 接收的终端 1 的接收子模块 2 的基带电路部分 22 和射频电路接收调谐部分 21 以及微处理器 6 所需要的不同工作电压。电源管理模块 72 同时侦测电池 71 的蓄电容量，当电池容量太低不足以时系统正常工作时控制电池状态指示灯 93 为警告状态，以提醒用户更换电池 71。

图 6 示出采用此 DMB 接收的终端 1 的一个产品实施例的 DMB 数据通信流程示意图；包含 DMB 接收终端 1 的产品和带有蓝牙功能的智能手机 114 通过蓝牙信号进行通信，特别地，为了说明 DMB 多媒体数据和 DMB 模块的配置和控制数据的通信流程，这里假设智能手机 114 运行了微软的视窗移动智能手机(Windows Mobile Smartphone)操作系统。

包含移动视频流媒体、DAB 声音帧和服务信息以及快速信息频道(FCI)频道的各种信息数据 221 由微处理器 9 中的固件(firmware)从 DMB 接收的终端 1 的接收子模块 2 的基带电路部分 22 读出，添加符合蓝牙 profile 的信息后送给蓝牙通信子模块 3 编码甚至压缩发出，由智能手机 114 的蓝牙通信模块接收，运行在智能手机 114 的蓝牙模块驱动程序将解码甚至解压后的数据送给操作系统，操作系统将数据传递给蓝牙协议栈分析程序分析，解出包含移动视频流媒体、 DAB 声音帧和服务信息以及快速信息频道(FCI)频道的各种信息数据，再传递给 DMB 应用软件，由 DMB 应用软件解释为视频、图像、声音等用户直接可以观看、收听的内容。

DMB 接收的终端 1 的控制数据和状态数据 222 包含了两个方向的数据，即由智能手机

114 发送给 DMB 接收的终端 1 的控制和设置数据，以及由智能手机 114 从 DMB 接收的终端 1 读出的状态数据。由智能手机 114 发送给 DMB 接收终端 1 的控制和设置数据，从 DMB 应用软件发送给蓝牙协议栈软件添加符合蓝牙 profile 的信息后经由操作系统送给蓝牙模块驱动程序，控制蓝牙通信模块发送出去。DMB 接收的终端 1 的蓝牙通信模块接收的信息，由微处理器 9 固件解出控制和设置数据，送给 DMB 的接收子模块 2 的基带电路部分 22。由智能手机 114 从 DMB 接收的终端 1 读出的状态数据经过相反的流向传递给 DMB 应用软件，这里就不在解释了。

图 7 示出按照本发明的 DVB-H 接收的终端 1a 的第一实施例，其中包括一个 DVB-H 接收终端 1a 的接收子模块 2a 以及一个通信子模块 3a，它按照已知的蓝牙（BT）标准操作。当然也可以按照已知的 Wi-Fi 标准操作。

按照已知的蓝牙（BT）标准操作时，DVB-H 接收的终端 1a 的接收子模块 2a 具有一个用于接收 DVB-H 信号(VHF(174~230Mhz)和/或 UHF(470~838Mhz)并且转换这些信号成为基带电路部分 22a 可接收的中频或低频信号的射频电路接收调谐部分 21a。这些中频或低频信号通过一个连接到射频电路接收调谐部分 21a 的基带电路部分 22a 转换成为包含视频流或音频流或其他数据对象的 IP 数据包。此过程在背景技术部分已简单介绍。已知用于此目的的各种信号处理方法，这里就不进一步解释了。

BT 的通信子模块 3a 包括一个用于在蓝牙频带（BT 频带）接收并且传输信号的射频电路部分 31a，它大约位于 2400 和 2483.5Mhz 之间的频率范围，还包括一个 BT 的基带电路部分 32a，它具有一个对射频电路部分 31a 的双向连接并且要按照 BT 标准发送和接收的 BT 信号通过 BT 的基带电路部分 32a 被编码和解码，并且必要时被压缩和解压。用于此目的的信号处理方法也是已知的，因此这里就不进一步解释了。

接收子模块 2a 的射频电路接收调谐部分 21a 连接到一个天线 4a。天线 4a 用作终端 1a 的接收 DVB-H 信号。

通信子模块 3a 的射频电路部分 31a 连接到一个天线 5a。天线 5a 用作接收和发送蓝牙信号。

接收子模块 2a 和通信子模块 3a 的两个基带电路部件 22a、32a 连接到一个微处理器和对外接口电路 6a，通过它接收子模块 2a 和通信子模块 3a 可以彼此交换数据，如同它们可以通过一个外部线路连接 61a 与外部设备（未示出）交换数据。接收子模块 2a 和通信子模块 3a 设计为独立功能单元。

因此，借助于 DVB-H 接收的终端 1a 的接收子模块 2a，DVB-H 信号可以被接收、转换成为包含视频流或音频流或其他数据对象的 IP 数据包，这些 IP 数据包然后经微处理器和对外接口电路 6a 馈送到 BT 的通信子模块 3a，以便在转换为根据 BT 标准编码的信号之后，经天线 5a 将这些数据发送到另一设备（例如，一个智能手机、一个 PDA 等），该另一设备具有用于对 BT 编码信号进行接收和解码的接口。该设备可以进一步处理从它所接收的 BT 编码信号，得到包含视频流或音频流或其他数据对象的 IP 数据包，然后送给运行于此设备的应用程序以转换为用户可以直接使用的格式(图像、声音、视频或其他信息)。

另一方面，所示 DVB-H 信号处理所得的 IP 数据包还可以通过微处理器和对外接口电路 6a 和外部线路连接 61a 馈送给不具有蓝牙接口的设备(例如通过通用串行总线(USB)馈送给一台 PC 机)。

而且还有可能通过天线 5a 和通信子模块 3a，从其它按照 BT 标准编码的设备接收 BT 信号，所示 BT 信号然后被转换到基带、被解码并通过微处理器和对外接口电路 6a 和外部线路连接 61a 馈送到一个被连接的用于控制和/或数据通信的设备。相反地，微处理器和对外接口电路 6a 还可设计用于从外部设备到子模块 3a 的数据的线路传输。

DVB-H 接收的终端 1a 连接到供电电路 7a,特别地，供电电路 7a 包括可以拆卸的电池或不可拆卸的充电电池。

图 8 示出按照本实用新型的 DVB-H 接收的终端 1a 的第二个实施例，其中图 7 中所示的分离的接收子模块 2a 和通信子模块 3a 结合成一个公共子模块 8a。

该公共子模块 8a 包括一个分别用于 DVB-H 信号和 BT 信号的公共射频电路部分 81a，与一个公共基带电路部分 82a 一起，公共射频电路部分 81a 合并射频电路接收调谐部分部份 21a 和射频电路部分 31a 的功能，公共基带电路部分 82a 合并了按照图 7 的基带电路部分 22a 和 32a 的功能。

另外，这里也提供如同第一实施例中所示的一个天线 4a 和一个天线 5a，天线 4a 用作接收 DVB-H 信号，天线 5a 用于接收和发送蓝牙信号。同时，在第二实施例中，如上解释，也有一个微处理器和对外接口电路 6a，用于通过外部线路连接 61a 与其它设备的双向连接。

最后，在第二实施例中，如上解释，也有与供电电路 7a 连接的接口。

第二实施例的基本功能和它的应用范围与第一实施例的相同，因此，就不在此解释了。

第二实施例的特别优点是它可以小型化到一个十分显著的程度，导致进一步降低制造费用并且扩大应用范围。

图 9 示出采用此 DVB-H 接收的终端 1a 的一个产品实施例的硬件功能方块图，其中 DVB-H

接收终端 1a 的射频电路接收调谐部分 21a 是独立的电路部件，DVB-H 接收的终端 1a 的基带电路部分 22a 也是独立的电路部件。

蓝牙通信子模块 3a 作为独立的电路部件合并了蓝牙的射频电路部分 31a 和基带电路部分 32a。天线 4a 用于接收 VHF(174~230Mhz)和/或 UHF(470~838Mhz)的 DVB-H 信号并传递给天线 4a 连接的 DVB-H 的接收子模块 2a 的射频电路接收调谐部分 21a。天线 5a 用于接收和发送 2400 和 2483.5Mhz 之间的蓝牙信号并传递给天线 5a 连接的蓝牙通信子模块 3a。

微处理器 9a 连接了 DVB-H 接收的终端 1a 的接收子模块 2a 的基带电路部分 22a 和蓝牙通信子模块 3a，微处理器 9a 负责设置 DVB-H 接收终端 1a 的接收子模块 2a 的基带电路部分 22a 和蓝牙通信子模块 3a 到可以工作的状态，接收 DVB-H 接收终端 1a 的接收子模块 2a 的基带电路部分 22a 送出的包含视频流或音频流或其他数据对象的 IP 数据包，并将这些数据包传递给蓝牙通信子模块 3a 进行编码甚至有可能压缩。相反地，当通过天线 5a, 蓝牙通信子模块 3a 接收到蓝牙通信的另一方传递来的控制或配置数据时，微处理器 9a 负责读取这些数据并转化为 DVB-H 接收的终端 1a 的接收子模块 2a 的基带电路部分 22a 可以识别的格式，然后传递给 DVB-H 的接收子模块 2a 的基带电路部分 22a 进行配置或控制。

微处理器9a另外连接了休眠/唤醒状态切换开关10a,用户可以通过休眠/唤醒状态切换开关 10a 的状态来通知微处理器 9a 要进入休眠或唤醒的状态。当微处理器 9a 接收到休眠/唤醒状态切换开关 10a 通知的休眠信号时，设置蓝牙通信子模块 3a、DVB 接收的终端 1a 的接收子模块 2a 的基带电路部分 22a、DVB 接收的终端 1a 的接收子模块 2a 的射频电路接收调谐部分 21a 和电源管理模块 72a 到省电状态，同时微处理器 9a 自身也进入到省电，但是又能够接收休眠/唤醒状态开关 10a 的唤醒信号的状态；当微处理器 9a 接收到休眠/唤醒状态切换开关 10a 通知的休眠信号时，微处理器 9a 首先自身恢复到工作状态，然后设置蓝牙通信子模块 3a、DVB 接收终端 1a 的接收子模块 2a 的基带电路部分 22a、DVB-H 接收的终端 1a 的接收子模块 2a 的射频电路接收调谐部分 21a 和电源管理模块 72a 到工作状态。

微处理器 9a 另外连接了 DVB-H 接收的终端 1a 的接收子模块状态指示灯(一个发光二级管)91a 和蓝牙通信子模块状态指示灯(一个发光二级管)92a。当 DVB-H 接收的终端 1a 的接收子模块 2a 的基带电路部分 22a 和射频电路接收调谐部分 21a 在正常工作时，微处理器 6a 设置 DVB-H 接收的终端 1a 的接收子模块状态指示灯 91a 为亮，当 DVB-H 接收的终端 1a 的接收子模块 2a 的基带电路部分 22a 和射频电路接收调谐部分 21a 在省电状态时，微处理器 9a 设置 DVB 接收的终端 1a 的接收子模块状态指示灯 91a 为暗，当 DVB-H 接收的终端 1a 的接收子模块 2a 的基带电路部分 22a 和射频电路接收调谐部分 21a 在不能正常的工作状态时，

微处理器 9a 设置 DVB-H 接收的终端 1a 的接收子模块状态指示灯 91a 为闪烁。同样地，当蓝牙通信子模块 3a 分别在正常工作状态、省电状态或不正常的工作状态时，微处理器 9a 分别设置蓝牙通信子模块状态指示灯 92a 为亮、暗、或闪烁。

最后，微处理器 9a 把用户上次对 DVB-H 接收的终端 1a 的接收子模块 2a 的基带电路部分 22a 设置的数据保存在微处理器 9a 内部连接的存储器中。这样，当用户在断开蓝牙通信子模块 3a 与对应通信的蓝牙模块的连接后，再一次的连接时微处理器 9a 默认使用上次保存的配置数据。

电源管理模块 72a 连接了电池 71a、蓝牙通信子模块 3a、DVB-H 接收的终端 1 的接收子模块 2a 的基带电路部分 22a 和射频电路接收调谐部分 21a、微处理器 9a 和电池状态指示灯(一个发光二级管)93a。电源管理模块 72a 由电池 71a 接收电能，并转化出蓝牙子模块 3a、DVB-H 接收的终端 1a 的接收子模块 2a 的基带电路部分 22a 和射频电路接收调谐部分 21a 以及微处理器 9a 所需要的不同工作电压。电源管理模块 72a 同时侦测电池 71a 的蓄电容量，当电池容量太低不足以时系统正常工作时控制电池状态指示灯 93a 为警告状态，以提醒用户更换电池 71a。

图 10 示出采用此 DVB-H 接收的终端 1a 的一个产品实施例的 DVB-H 数据通信流程示意图；包含 DVB-H 接收的终端 1a 的产品和带有蓝牙功能的智能手机 114 通过蓝牙信号进行通信，特别地，为了说明 DVB-H 视频数据和 DVB-H 模块的配置和控制数据的通信流程，这里假设智能手机 114 运行了微软的视窗移动智能手机(Windows Mobile Smartphone)操作系统。

解调过的包含视频/音频的 IP 数据包 221a 由微处理器 9a 中的固件(firmware)从 DVB-H 接收的终端 1a 的接收子模块 2a 的基带电路部分 22a 读出，添加符合蓝牙 profile 的信息后送给蓝牙通信子模块 3a 编码甚至压缩发出，由智能手机 114 的蓝牙通信模块接收，运行在智能手机 114 的蓝牙模块驱动程序将解码甚至解压后的数据送给操作系统，操作系统将数据传递给蓝牙协议栈分析程序分析，解出包含视频/音频的 IP 数据包，再传递给 DVB-H 应用软件，由 DVB-H 应用软件解释为视频、图像、声音等用户直接可以观看、收听的内容。

DVB-H 接收终端 1a 的控制数据和状态数据 222a 包含了两个方向的数据，即由智能手机 114 发送给 DVB-H 接收的终端 1a 的控制和设置数据，以及由智能手机 114 从 DVB-H 接收的终端 1a 读出的状态数据。由智能手机 114 发送给 DVB-H 接收的终端 1a 的控制和设置数据，从 DVB-H 应用软件发送给蓝牙协议栈软件添加符合蓝牙 profile 的信息后经由操作系统送给蓝牙模块驱动程序，控制蓝牙通信模块 3a 发送出去。DVB-H 接收的终端 1a 的蓝牙通信模块接收的信息，由微处理器 9a 固件解出控制和设置数据，送给 DVB-H 接收的终端 1a 的接

收子模块 2a 的基带电路部分 22a。由智能手机 114 从 DVB-H 接收的终端 1a 读出的状态数据经过相反的流向传递给 DVB 应用软件，这里就不在解释了。

图 11 为本发明在接收及传送高通公司(QUALCOMM)提出的移动电视标准 (MediaFLO)应用的一个示意图。

MediaFLO 接收终端 1b 接收 MediaFLO 发射台的 FLO 信号 131b，并且转换成为多媒体数据流（视频流、音频流）、非实时数据、IP 数据包和系统信息；然后将馈送过来的多媒体数据流（视频流、音频流）、非实时数据、IP 数据包和系统信息转换为蓝牙调制信号 132，与带有蓝牙功能的笔记本电脑 111、带有蓝牙功能的 PMP112、带有蓝牙功能的 PDA113 或带有蓝牙功能的智能手机 114 通信。

当然也可以将馈送过来的多媒体数据流（视频流、音频流）、非实时数据、IP 数据包和系统信息转换为 Wi-Fi 信号，与带有 Wi-Fi 功能的笔记本电脑、带有 Wi-Fi 功能的 PMP、带有 Wi-Fi 功能的 PDA 或带有 Wi-Fi 功能的智能手机通信。

图 12 示出按照本发明的 MediaFLO 接收终端 1b 的第一实施例，其中包括一个 MediaFLO 接收终端 1b 的接收子模块 2b 以及一个通信子模块 3b，它按照已知的蓝牙（BT）标准操作。当然也可以按照已知的 Wi-Fi 标准操作。

按照已知的蓝牙（BT）标准操作时，MediaFLO 接收终端 1b 的接收子模块 2b 具有一个用于接收 FLO 信号(VHF(174~230Mhz)和/或 UHF(470~838Mhz) 和/或 L-Band(L1（1452-1492MHz）和 L2（1660-1685MHz）))并且转换这些信号成为基带电路部分 22b 可接收的中频或低频信号的射频电路接收调谐部分 21b。这些中频或低频信号通过一个连接到射频电路接收调谐部分 21b 的基带电路部分 22b 转换成为多媒体数据流（视频流、音频流）、非实时数据、IP 数据包和系统信息。此过程在背景技术部分已简单介绍。已知用于此目的的各种信号处理方法，这里就不进一步解释了。

BT 的通信子模块 3b 包括一个用于在蓝牙频带（BT 频带）接收并且传输信号的射频电路部分 31b，它大约位于 2400 和 2483.5Mhz 之间的频率范围，还包括一个 BT 的基带电路部分 32b，它具有一个对射频电路部分 31b 的双向连接并且要按照 BT 标准发送和接收的 BT 信号通过 BT 的基带电路部分 32b 被编码和解码，并且必要时被压缩和解压。用于此目的的信号处理方法也是已知的，因此这里就不进一步解释了。

接收子模块 2b 的射频电路接收调谐部分 21b 连接到一个天线 4b。天线 4b 用作终端 1b

的接收 FLO 信号。

通信子模块 3b 的射频电路部分 31b 连接到一个天线 5b。天线 5b 用作接收和发送蓝牙信号。

接收子模块 2b 和通信子模块 3b 的两个基带电路部件 22b、32b 连接到一个微处理器和对外接口电路 6b，通过它接收子模块 2b 和通信子模块 3b 可以彼此交换数据，如同它们可以通过一个外部线路连接 61b 与外部设备（未示出）交换数据。接收子模块 2b 和通信子模块 3b 设计为独立功能单元。

因此，借助于 MediaFLO 接收终端 1b 的接收子模块 2b，FLO 信号可以被接收、转换成为多媒体数据流（视频流、音频流）、非实时数据、IP 数据包和系统信息，这些数据然后经微处理器和对外接口电路 6b 馈送到 BT 的通信子模块 3b，以便在转换为根据 BT 标准编码的信号之后，经天线 5b 将这些数据发送到另一设备（例如，一个智能手机、一个 PDA 等），该另一设备具有用于对 BT 编码信号进行接收和解码的接口。该设备可以进一步处理从它所接收的 BT 编码信号，得到多媒体数据流（视频流、音频流）、非实时数据、IP 数据包和系统信息，然后送给运行于此设备的应用程序以转换为用户可以直接使用的格式(图像、声音、视频或其他信息)。

另一方面，所示 FLO 信号处理所得的数据还可以通过微处理器和对外接口电路 6b 和外部线路连接 61b 馈送给不具有蓝牙接口的设备(例如通过通用串行总线(USB)馈送给一台 PC 机)。

而且还有可能通过天线 5b 和通信子模块 3b，从其它按照 BT 标准编码的设备接收 BT 信号，所示 BT 信号然后被转换到基带、被解码并通过微处理器和对外接口电路 6b 和外部线路连接 61b 馈送到一个被连接的用于控制和/或数据通信的设备。相反地，微处理器和对外接口电路 6b 还可设计用于从外部设备到子模块 3b 的数据的线路传输。

MediaFLO 接收终端 1b 连接到供电电路 7b,特别地，供电电路 7b 包括可以拆卸的电池或不可拆卸的充电电池。

图 13 示出按照本发明的 MediaFLO 接收终端 1b 的一个第二实施例，其中图 12 中所示的分离的接收子模块 2b 和通信子模块 3b 结合成一个公共子模块 8b。

该公共子模块 8b 包括一个分别用于 FLO 信号和 BT 信号的公共射频电路部分 81b，与一个公共基带电路部分 82b 一起，公共射频电路部分 81b 合并射频电路接收调谐部分部份 21b 和射频电路部分 31b 的功能，公共基带电路部分 82b 合并了按照图 12 的基带电路部分 22b

和 32b 的功能。

另外，这里也提供如同第一实施例中所示的一个天线 4b 和一个天线 5b，天线 4b 用作接收 FLO 信号，天线 5b 用于接收和发送蓝牙信号。同时，在第二实施例中，如上解释，也有一个微处理器和对外接口电路 6b，用于通过外部线路连接 61b 与其它设备的双向连接。

最后，在第二实施例中，如上解释，也有与供电电路 7b 连接的接口。

第二实施例的基本功能和它的应用范围与第一实施例的相同，因此，就不在此解释了。

第二实施例的特别优点是它可以小型化到一个十分显著的程度，导致进一步降低制造费用并且扩大应用范围。

图 14 示出采用此 MediaFLO 接收终端 1b 的一个产品实施例的硬件功能方块图，其中 MediaFLO 接收终端 1b 的射频电路接收调谐部分 21b 是独立的电路部件，MediaFLO 接收的终端 1b 的基带电路部分 22b 也是独立的电路部件。

蓝牙通信子模块 3b 作为独立的电路部件合并了蓝牙的射频电路部分 31b 和基带电路部分 32b。天线 4b 用于接收 VHF(174~230Mhz)和/或 UHF(470~838Mhz) 和/或 L-Band(L1（1452-1492MHz）和 L2（1660-1685MHz）)的 FLO 信号并传递给天线 4b 连接的 MediaFLO 的接收子模块 2b 的射频电路接收调谐部分 21b。天线 5b 用于接收和发送 2400 和 2483.5Mhz 之间的蓝牙信号并传递给天线 5b 连接的蓝牙通信子模块 3b。

微处理器 9b 连接了 MediaFLO 接收终端 1b 的接收子模块 2b 的基带电路部分 22b 和蓝牙通信子模块 3b，微处理器 9b 负责设置 MediaFLO 接收终端 1b 的接收子模块 2b 的基带电路部分 22b 和蓝牙通信子模块 3b 到可以工作的状态，接收 MediaFLO 接收终端 1b 的接收子模块 2b 的基带电路部分 22b 送出的多媒体数据流（视频流、音频流）、非实时数据、IP 数据包和系统信息，并将这些数据包传递给蓝牙通信子模块 3b 进行编码甚至有可能压缩。相反地，当通过天线 5b，蓝牙通信子模块 3b 接收到蓝牙通信的另一方传递来的控制或配置数据时，微处理器 9b 负责读取这些数据并转化为 MediaFLO 接收终端 1b 的接收子模块 2b 的基带电路部分 22b 可以识别的格式，然后传递给 MediaFLO 的接收子模块 2b 的基带电路部分 22b 进行配置或控制。

.微处理器 9b 另外连接了休眠/唤醒状态切换开关 10b，用户可以通过休眠/唤醒状态切换开关 10b 的状态来通知微处理器 9b 要进入休眠或唤醒的状态。当微处理器 9b 接收到休眠/唤醒状态切换开关 10b 通知的休眠信号时，设置蓝牙通信子模块 3b、MediaFLO 接收终端 1b 的接收子模块 2b 的基带电路部分 22b、MediaFLO 接收终端 1b 的接收子模块 2b 的射频电路

接收调谐部分 21b 和电源管理模块 72b 到省电状态，同时微处理器 9b 自身也进入到省电但是又能够接收休眠/唤醒状态开关 10b 的唤醒信号的状态；当微处理器 9b 接收到休眠/唤醒状态切换开关 10b 通知的休眠信号时，微处理器 9b 首先自身恢复到工作状态，然后设置蓝牙通信子模块 3b、MediaFLO 接收终端 1b 的接收子模块 2b 的基带电路部分 22b、MediaFLO 接收终端 1b 的接收子模块 2b 的射频电路接收调谐部分 21b 和电源管理模块 72b 到工作状态。

微处理器 9b 另外连接了 MediaFLO 接收终端 1b 的接收子模块状态指示灯(一个发光二级管)91b 和蓝牙通信子模块状态指示灯(一个发光二级管)92b。当 MediaFLO 接收终端 1b 的接收子模块 2b 的基带电路部分 22b 和射频电路接收调谐部分 21b 在正常工作时，微处理器 6b 设置 MediaFLO 接收终端 1b 的接收子模块状态指示灯 91b 为亮，当 MediaFLO 接收终端 1b 的接收子模块 2b 的基带电路部分 22b 和射频电路接收调谐部分 21b 在省电状态时，微处理器 9b 设置 MediaFLO 接收终端 1b 的接收子模块状态指示灯 91b 为暗，当 MediaFLO 接收终端 1b 的接收子模块 2b 的基带电路部分 22b 和射频电路接收调谐部分 21b 在不能正常的工作状态时，微处理器 9b 设置 MediaFLO 接收终端 1b 的接收子模块状态指示灯 91b 为闪烁。同样地，当蓝牙通信子模块 3b 分别在正常工作状态、省电状态或不正常的工作状态时，微处理器 9b 分别设置蓝牙通信子模块状态指示灯 92b 为亮、暗、或闪烁。

最后，微处理器 9b 把用户上次对 MediaFLO 接收终端 1b 的接收子模块 2b 的基带电路部分 22b 设置的数据保存在微处理器 9b 内部连接的存储器中。这样，当用户在断开蓝牙通信子模块 3b 与对应通信的蓝牙模块的连接后，再一次的连接时微处理器 9b 默认使用上次保存的配置数据。

电源管理模块 72b 连接了电池 71b、蓝牙通信子模块 3b、MediaFLO 接收终端 1b 的接收子模块 2b 的基带电路部分 22b 和射频电路接收调谐部分 21b、微处理器 9b 和电池状态指示灯(一个发光二级管)93b。电源管理模块 72b 由电池 71b 接收电能，并转化出蓝牙子模块 3b、MediaFLO 接收终端 1b 的接收子模块 2b 的基带电路部分 22b 和射频电路接收调谐部分 21b 以及微处理器 9b 所需要的不同工作电压。电源管理模块 72b 同时侦测电池 71b 的蓄电容量，当电池容量太低不足以时系统正常工作时控制电池状态指示灯 93b 为警告状态，以提醒用户更换电池 71b。

图 15 示出采用此 MediaFLO 接收终端 1b 的一个产品实施例的 MediaFLO 数据通信流程示意图；包含 MediaFLO 接收终端 1b 的产品和带有蓝牙功能的智能手机 114 通过蓝牙信号

进行通信，特别地，为了说明 MediaFLO 视频数据和 MediaFLO 模块的配置和控制数据的通信流程，这里假设智能手机 114 运行了微软的视窗移动智能手机(Windows Mobile Smartphone)操作系统。

多媒体数据流（视频流、音频流）、非实时数据、IP 数据包和系统信息 221b 由微处理器 9b 中的固件(firmware)从 MediaFLO 接收终端 1b 的接收子模块 2b 的基带电路部分 22b 读出，添加符合蓝牙 profile 的信息后送给蓝牙通信子模块 3b 编码甚至压缩发出，由智能手机 114 的蓝牙通信模块接收，运行在智能手机 114 的蓝牙模块驱动程序将解码甚至解压后的数据送给操作系统，操作系统将数据传递给蓝牙协议栈分析程序分析，解出多媒体数据流（视频流、音频流）、非实时数据、IP 数据包和系统信息，再传递给 MediaFLO 应用软件，由 MediaFLO 应用软件解释为视频、图像、声音等用户直接可以观看、收听的内容。

MediaFLO 接收终端 1b 的控制数据和状态数据 222b 包含了两个方向的数据，即由智能手机 114 发送给 MediaFLO 接收终端 1b 的控制和设置数据，以及由智能手机 114 从 MediaFLO 接收终端 1b 读出的状态数据。由智能手机 114 发送给 MediaFLO 接收终端 1b 的控制和设置数据，从 MediaFLO 应用软件发送给蓝牙协议栈软件添加符合蓝牙 profile 的信息后经由操作系统送给蓝牙模块驱动程序，控制蓝牙通信模块 3b 发送出去。MediaFLO 接收终端 1b 的蓝牙通信模块接收的信息，由微处理器 9b 固件解出控制和设置数据，送给 MediaFLO 接收终端 1b 的接收子模块 2b 的基带电路部分 22b。由智能手机 114 从 MediaFLO 接收终端 1b 读出的状态数据经过相反的流向传递给 MediaFLO 应用软件，这里就不在解释了。

本发明的技术内容及技术特点已经揭示如上，然而本领域的技术人员仍可能基于本发明的教示及揭示而作种种不背离本发明的替换及修改。因此，本发明的保护范围应不限于实施例所揭示的内容，而应包括各种不背离本发明的替换及修改，并为本专利申请的权利要求所涵盖。

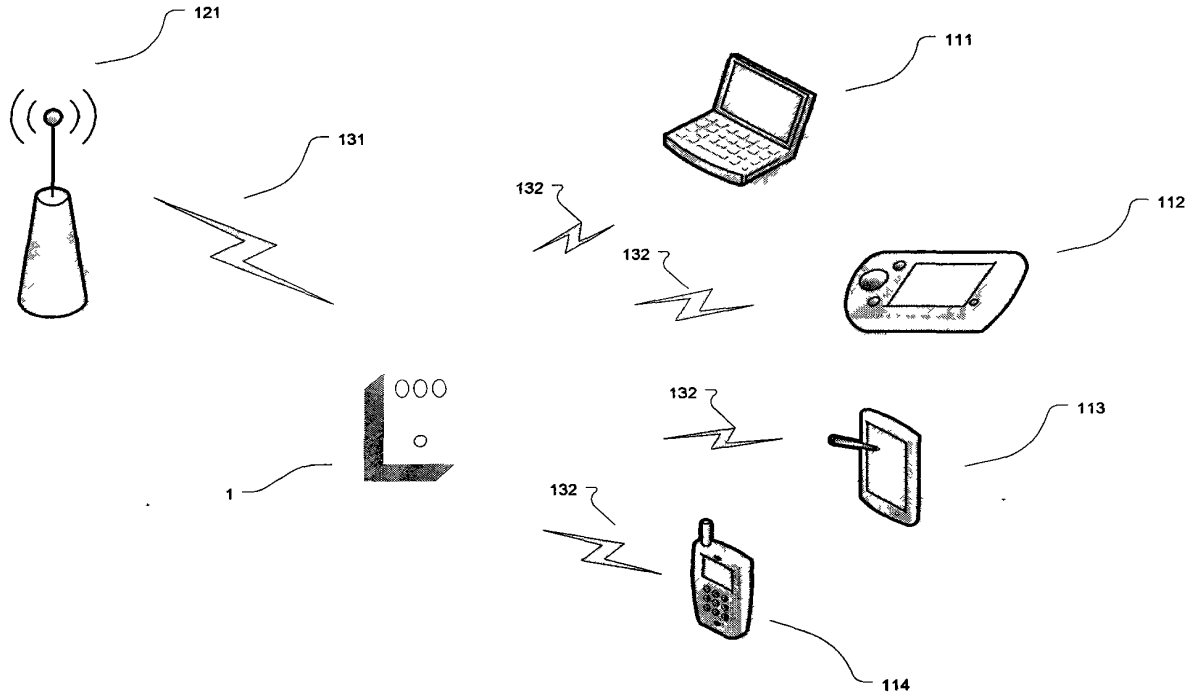
121
111
131
132
112
132
132
113
1
132
114

图 1

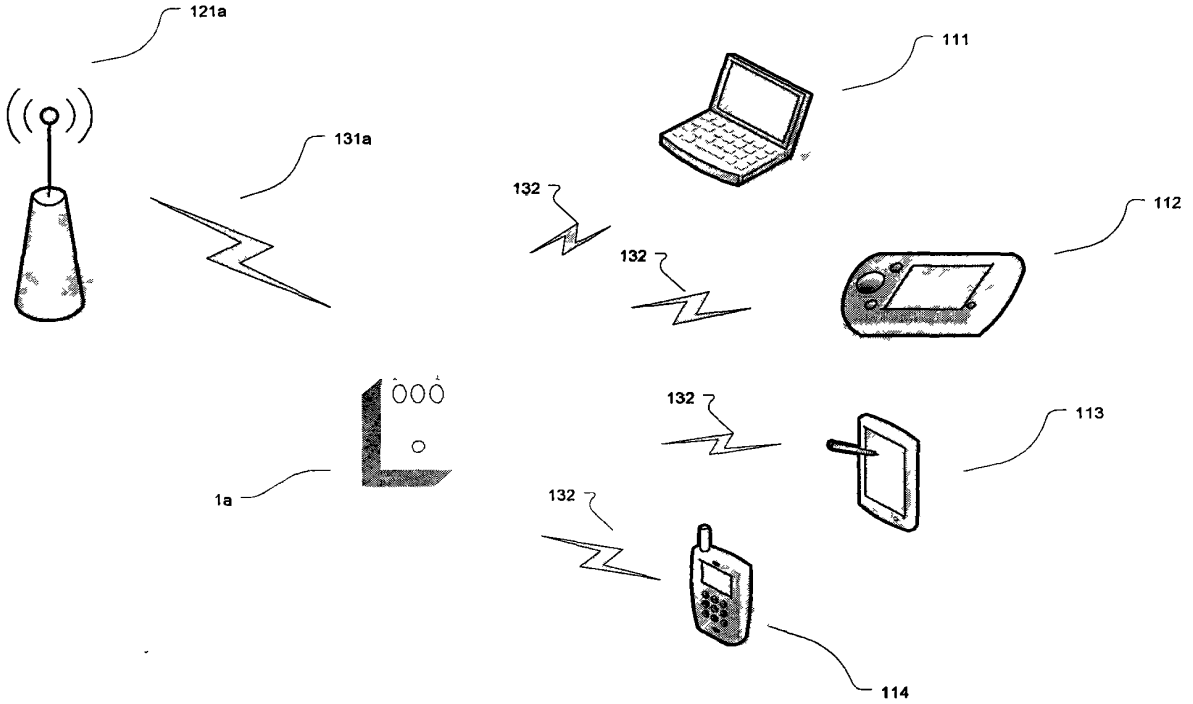
121a
111
131a
132
112
132
132
113
1a
132
114

图 2

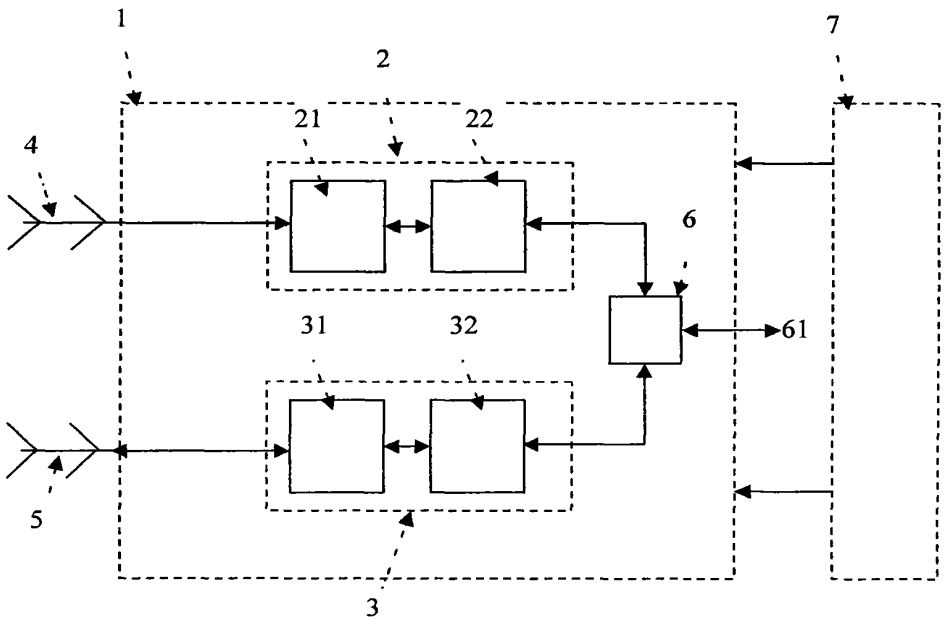

图 3

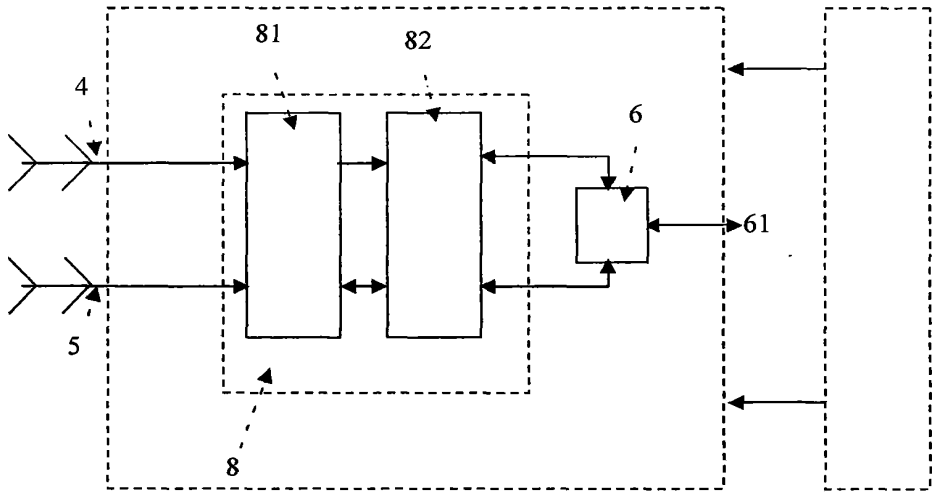

图 4

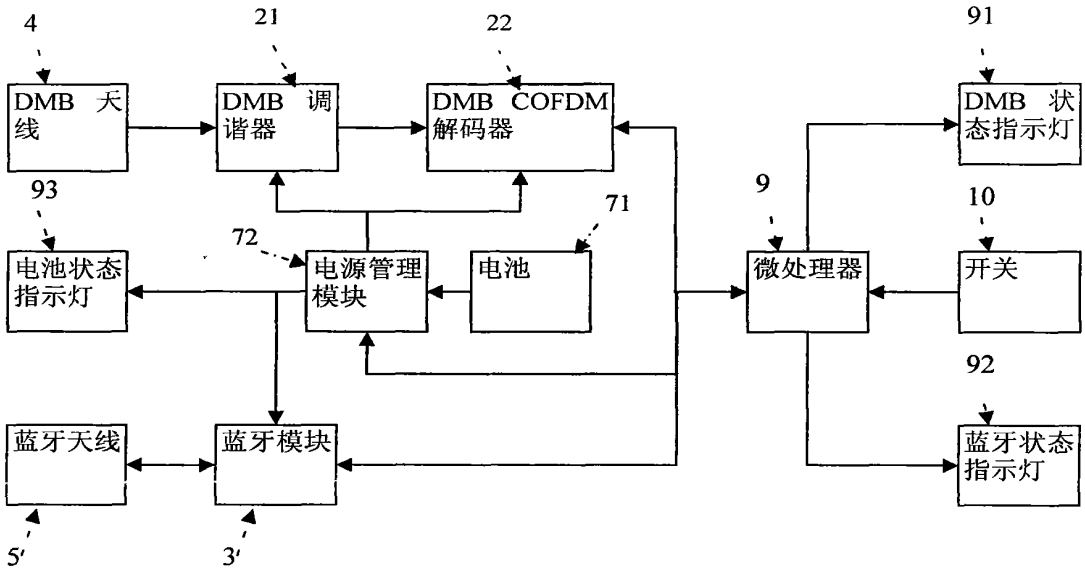
4
21
22
91
DMB 天线
DMB 调谐器
DMB COFDM 解码器
DMB 状态指示灯
93
71
9
10
72
电池状态指示灯
电源管理模块
电池
微处理器
开关
92
蓝牙天线
蓝牙模块
蓝牙状态指示灯
5′
3′

图 5

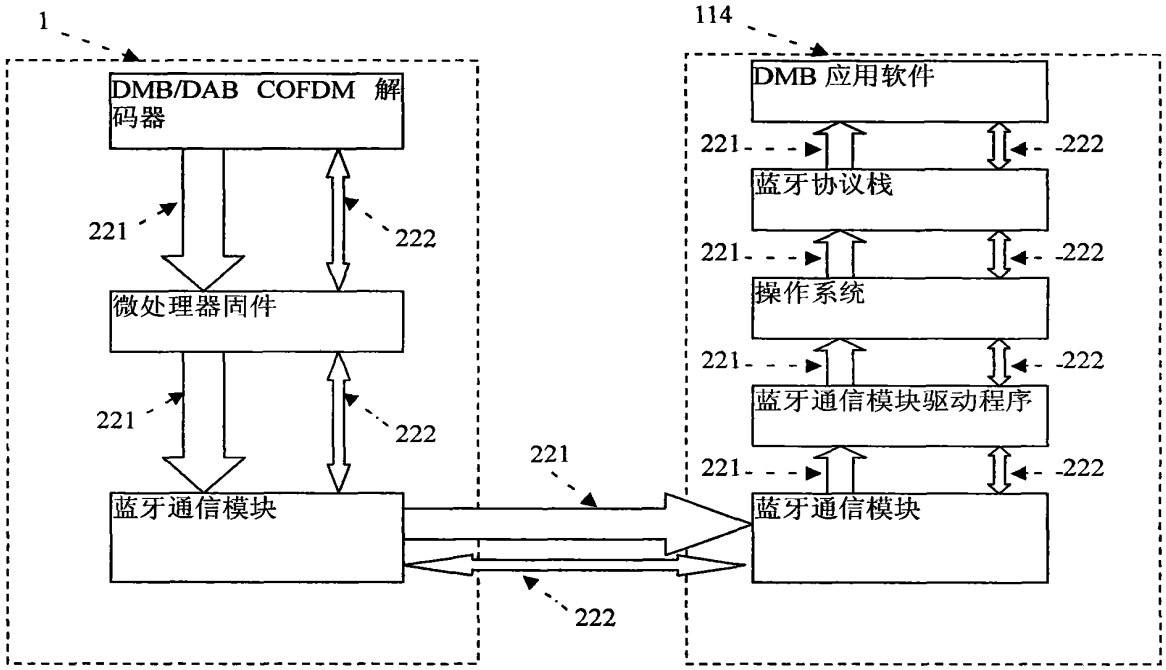
1
114
DMB/DAB COFDM 解码器
DMB 应用软件
221
222
蓝牙协议栈
221
222
微处理器固件
操作系统
221
222
221
222
蓝牙通信模块驱动程序
221
221
222
蓝牙通信模块
蓝牙通信模块
222

图 6

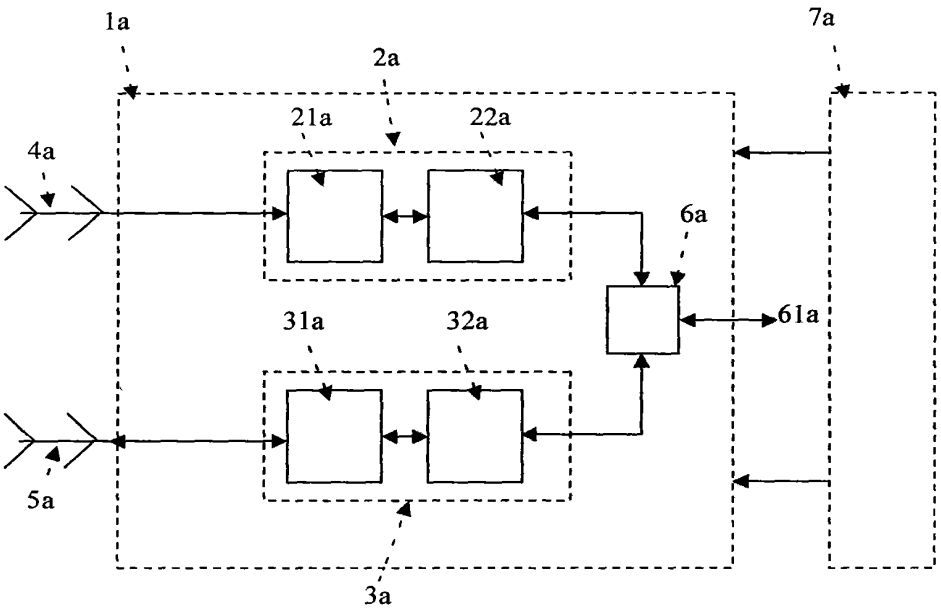

图 7

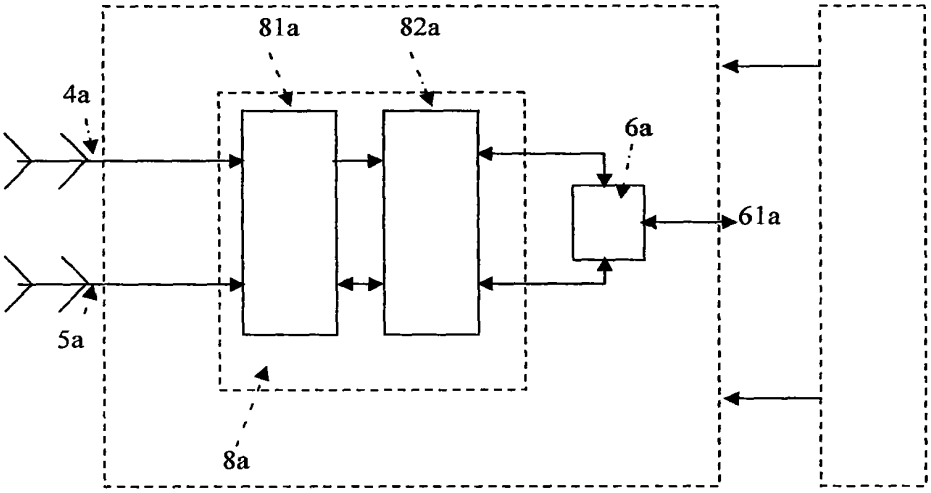

图 8

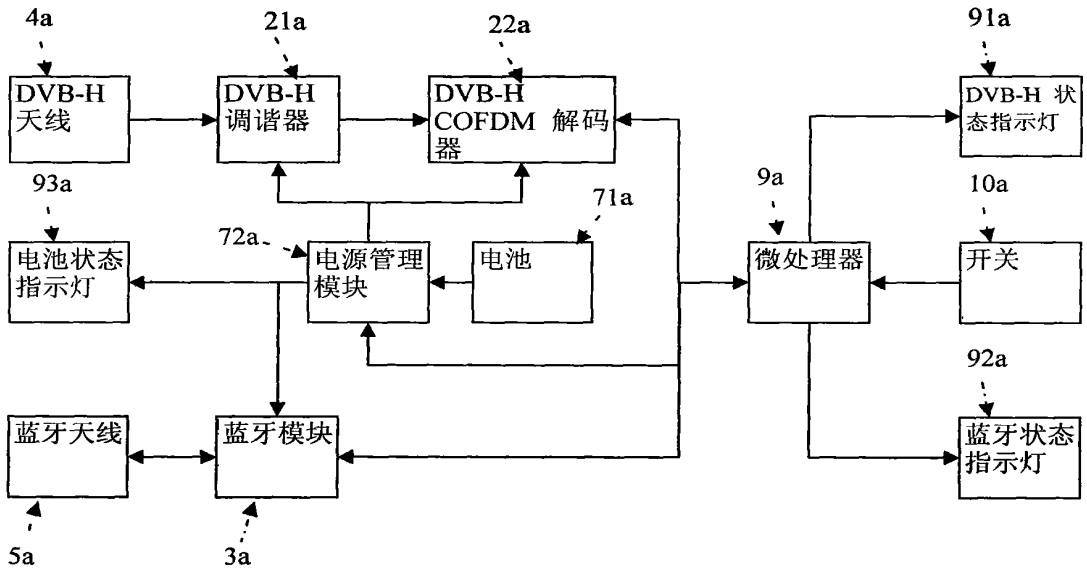
4a
21a
22a
91a
DVB-H 天线
DVB-H 调谐器
DVB-H COFDM 解码器
DVB-H 状态指示灯
93a
71a
9a
10a
72a
电池状态指示灯
电源管理模块
电池
微处理器
开关
92a
蓝牙天线
蓝牙模块
蓝牙状态指示灯
5a
3a

图 9

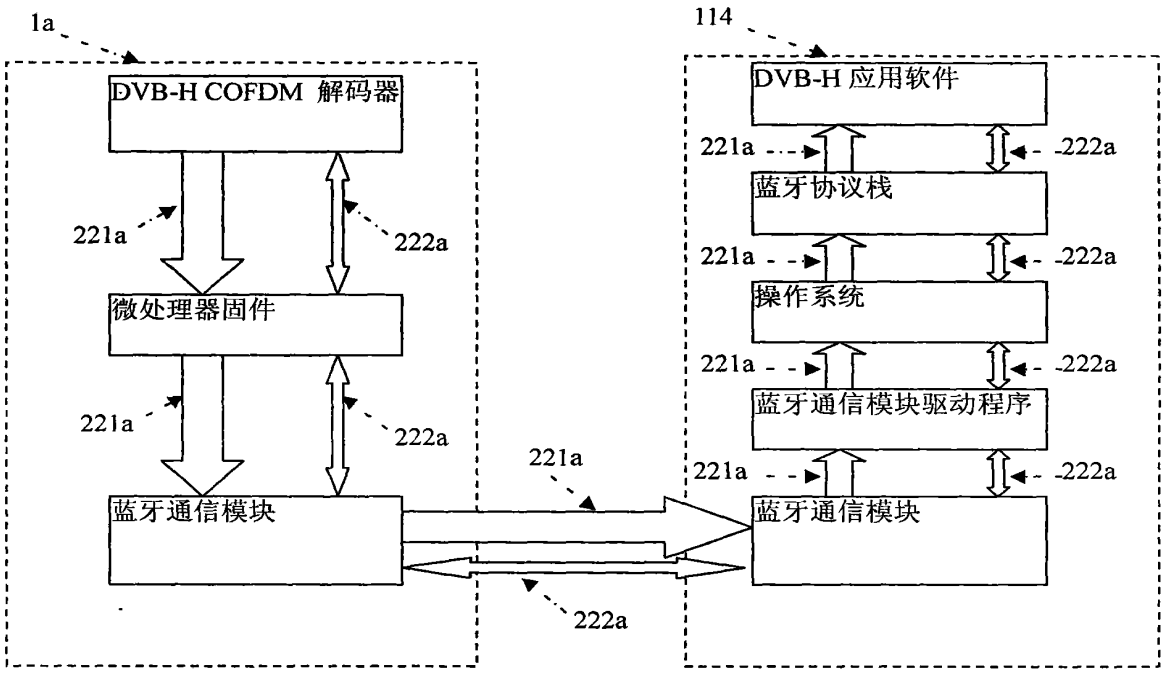
1a
114
DVB-H COFDM 解码器
DVB-H 应用软件
221a
222a
蓝牙协议栈
221a
222a
微处理器固件
操作系统
221a
222a
221a
222a
蓝牙通信模块驱动程序
221a
221a
222a
蓝牙通信模块
蓝牙通信模块
222a

图 10

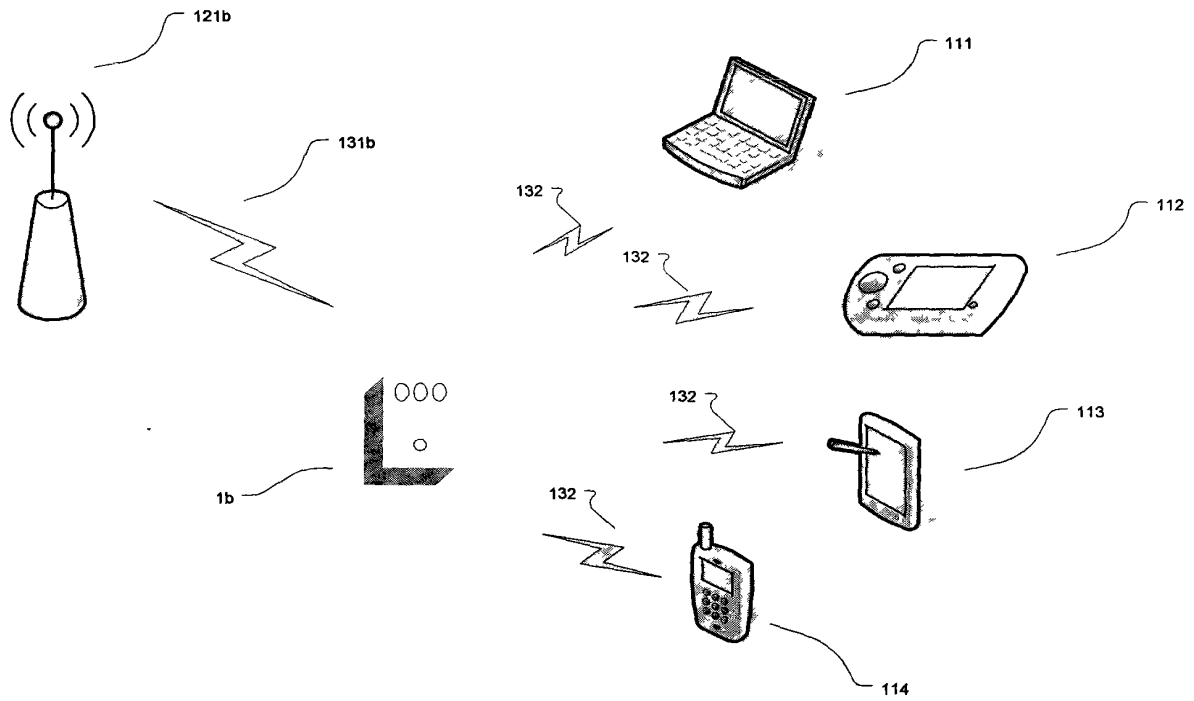
121b
111
131b
132
112
132
132
113
1b
132
114

图 11

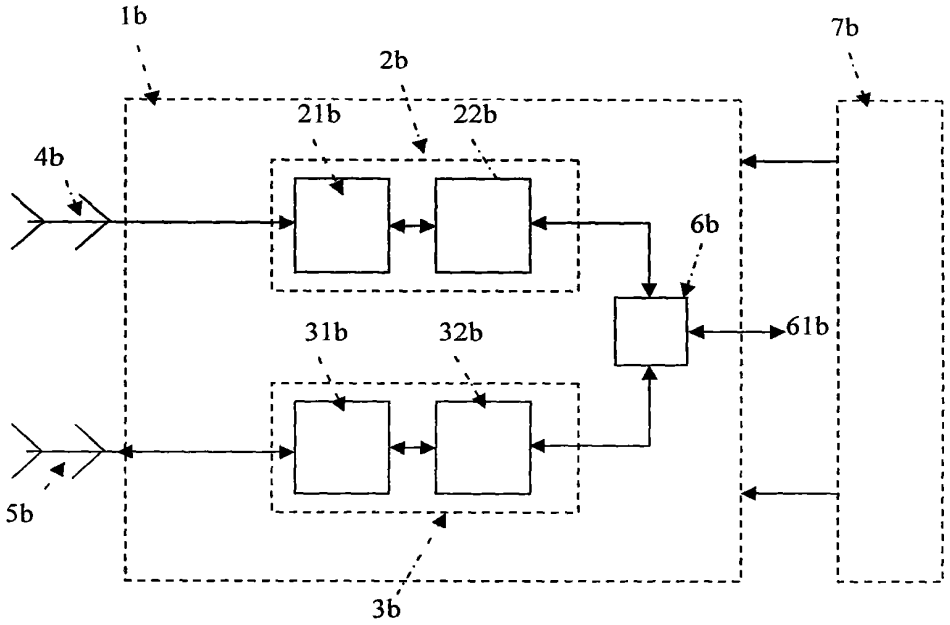
1b
7b
2b
21b
22b
4b
6b
61b
31b
32b
5b
3b

图 12

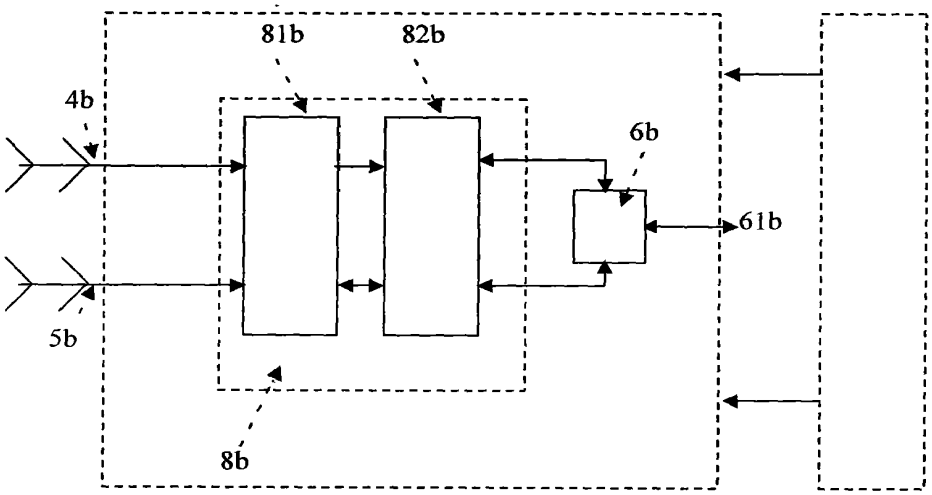
81b
82b
4b
6b
61b
5b
8b

图 13

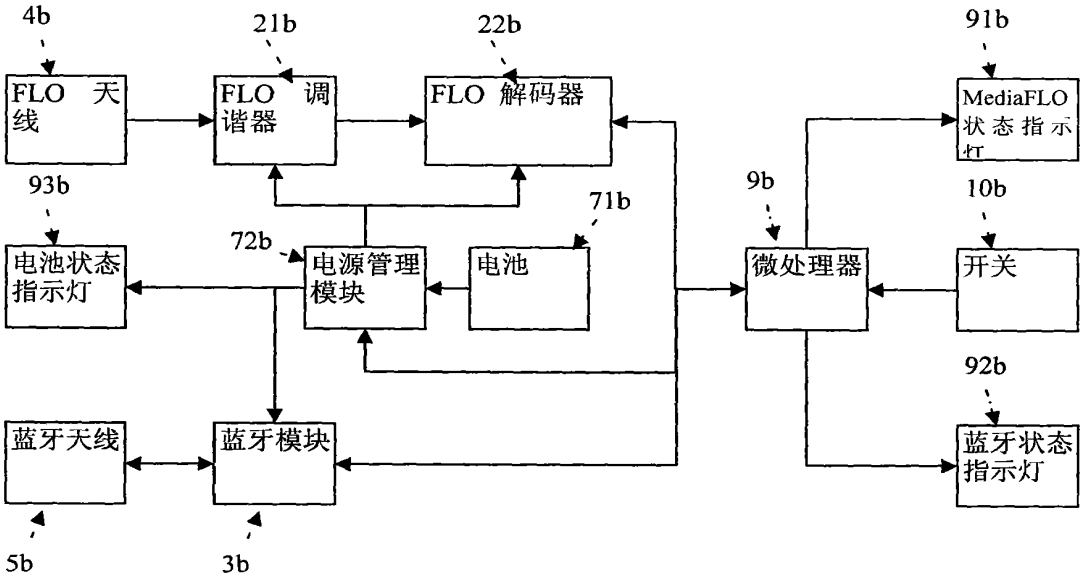
4b
21b
22b
91b
FLO 天线
FLO 调谐器
FLO 解码器
MediaFLO 状态指示灯
93b
9b
10b
71b
72b
电池状态指示灯
电源管理模块
电池
微处理器
开关
92b
蓝牙天线
蓝牙模块
蓝牙状态指示灯
5b
3b

图 14

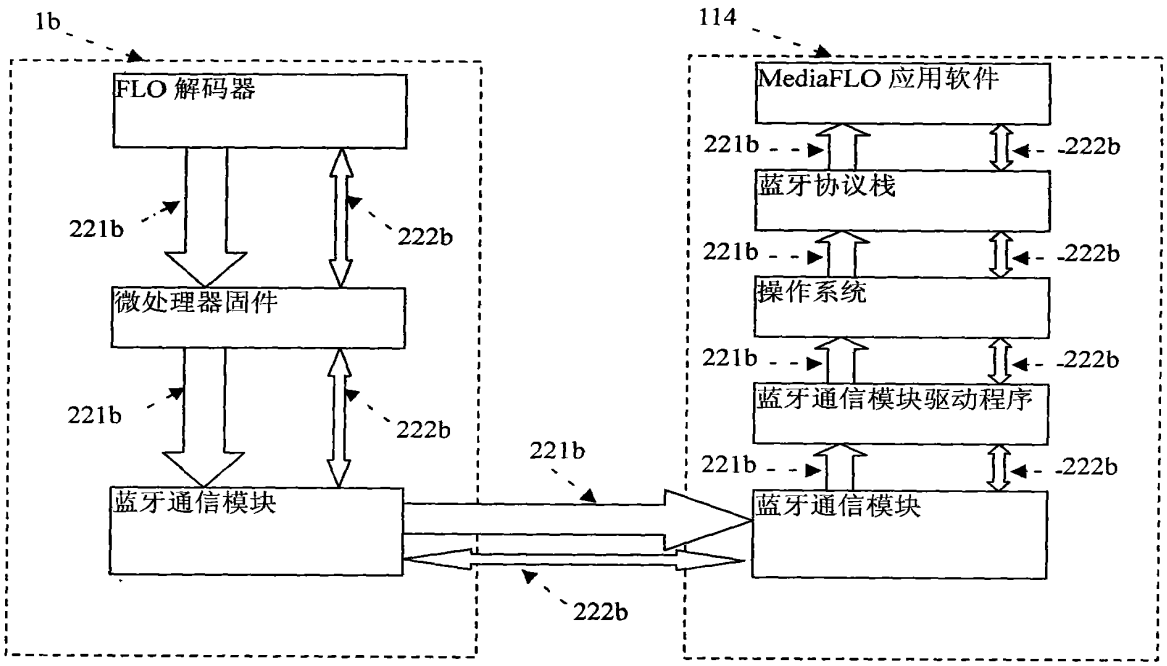
1b
114
FLO 解码器
MediaFLO 应用软件
221b
222b
蓝牙协议栈
221b
222b
微处理器固件
操作系统
221b
222b
221b
222b
蓝牙通信模块驱动程序
221b
222b
221b
蓝牙通信模块
蓝牙通信模块
222b

图 15

Espacenet

Bibliographic data: CN101577650 (A) — 2009-11-11

Household palmtop mobile television system

Inventor(s): MIN GAO [CN]; ZHENYU CHEN [CN] ± (GAO MIN, ; CHEN ZHENYU)

Applicant(s): GUANGZHOU HKUST R & D CORP LTD [CN] ± (GUANGZHOU HKUST R&D CORPORATION LTD)

Classification: **- international:** ***H04L12/28***
- cooperative:

Application number: CN20081027884 20080506

Priority number(s): CN20081027884 20080506

Abstract of CN101577650 (A)

The invention relates to a household palmtop mobile television system and relates to the field of computer streaming media. The household palmtop mobile television system combines the mobility of mobile phones and the entertainment of televisions and expands household entertainment modes. A server (3) receives the input of two television signals (1 and 2) and responds to control commands sent by the mobile phone (7), wherein one signal is sent to a television (6), and the other signal is sent to an intelligent mobile phone (7) by wireless networks (4 and 5) to play. The system has clear structure, is easy to expand; and the streaming media are real-time and easy to control so that household users can obtain new entertainment experiences on a wireless mobile platform at any corner.

[19] 中华人民共和国国家知识产权局

[51] Int. Cl.
H04L 12/28 (2006.01)

[12] 发明专利申请公布说明书

[21] 申请号 200810027884.4

[43] 公开日 2009 年 11 月 11 日

[11] 公开号 CN 101577650A

[22] 申请日 2008.5.6

[21] 申请号 200810027884.4

[71] 申请人 广州香港科大研究开发有限公司

地址 511458 广东省广州市南沙区资讯科技园软件楼南区 302A

[72] 发明人 高 民 陈振宇

权利要求书 1 页 说明书 2 页 附图 1 页

[54] 发明名称

家庭掌上移动电视系统

[57] 摘要

一种掌上移动视频系统，涉及计算机流媒体领域，结合手机的移动性和电视的娱乐性，扩展了家庭娱乐方式。 服务器(3)接收两路电视信号(1，2)输入，一路输送到电视机(6)，一路通过无线网络(4，5)发送到智能手机(7)播放，并响应手机发出的控制命令。 本系统结构清晰易扩展，流媒体的具有实时性和易于控制，使得家庭用户可以在家庭中每个角落都能获得无线移动平台上的娱乐新体验。

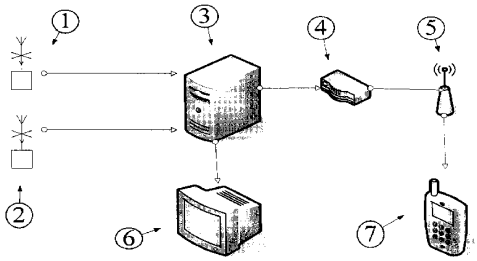

1. 一种经过编码把一路电视信号通过网络发布，另一路电视信号直接显示在电视机上，使用智能手机通过无线网络接收电视信号进行实时播放，并能分别控制两路电视信号频道转换的系统，主要实现以下步骤：

1） 服务器端同时接受两路电视信号输入，对其中一路信号的视频信号不经过编码压缩，直接全屏幕显示，以电视机或者其它显示仪器作为显示输出，输入的声音也直接转送到声音播放设备。

2） 服务器对第二路电视信号的视频和声音信号经过编码，可以通过网络传输。

3） 服务器对网络命令进行侦听。

4） 手机端打开客户端程序，链接服务器，对服务器视频和音频信号接收并播放。

5） 手机端可以自由控制服务器的两路电视信号的频道切换。

2. 如权利要求 1 所述的其特征在于信号输入端同时接受两路电视信号的输入。

3. 如权利要求 1 所述的其特征在于服务器同时对两路电视信号进行处理，并且对其中一路经过编码后能通过网络发送。

4. 如权利要求 1 所述的特征在于客户端手机可以接收服务器发送的音视频流媒体进行播放，并没有明显的时间差，客户端手机还能分别控制两路信号的频道切换。

家庭掌上移动电视系统

技术领域： 本发明涉及计算机网络以及视频流媒体压缩传输领域，尤其涉及智能手机设备对网络流媒体接收处理方法。

技术背景： 电视通常作为我们日常生活的娱乐中心，但通常都会固定在一个地方，例如客厅或者卧室。缺点是难以移动而且很少会在在同一个地方放置超过一台电视。随着生活水平的发展，人们对于娱乐的需要也日益要求更便利和快捷，我们除了端坐客厅之外，也希望在书房、厨房、洗手间、阳台甚至被窝里面也能随时享受电视带来的娱乐和信息，但由于电视的难以移动，目前人们还不能享受这样的便利。手机作为一种人们最常用的移动终端设备，计算能力，显示能力也越来越强，我们常用的智能手机都已经超出简单的通话和短信息传送以及诸如 WAP 上网所需要的能力，手机也逐渐成为人们日常生活的信息来源和娱乐设备。作为人们最常用的娱乐设备电视和手机，如果能发挥各自的优势结合起来，将更丰富我们的娱乐。

现在市场上可以在手机上看电视的的产品或者专利有以下几种：基于无线通信网络的手机电视，通过通信网络传输，由专门的内容提供商提供节目。这种手机电视存在以下明显缺点：1.清晰度和流畅度不足，根据经验，就算在 3G 的环境下，也因为带宽的不足，通过网络传输的电视信号会有很大的延迟和丢帧，严重影响了观感；2. 费用高，由于需要额外的网络流量，用户需要付出额外的通信费用；3. 实时性，虽然手机电视也能和普通电视一样进行直播，但由于网络的延迟，缓冲等因素，需要较长的连接时间，存在较大的延迟，节目切换也耗时较多；4.使用习惯不同，用户很多时候是需要在家里随身携带的电视，以保持对感兴趣的节目的关注或者在观看电视的同时了解其频道的内容并方便的进行切换，显然现在的手机电视和通常的用户使用习惯存在着较大的差异。

另外也有手机直接接收电视信号的产品，是通过外加电视接收功能的配件实现。这种功能存在以下缺点：内容来源少，现在大多数地方通过无线广播的电视信号都会存在数量少，画面不清晰，容易受干扰的问题。同时接受无线的电视信号也容易对正常的通信信号造成干扰。

通过检索，现在发明专利中有电视接收器，接收器传输流媒体信号，手机通过 usb 线，蓝牙或者红外接收，使用播放器播放，虽然实现了通过手机看电视，但明显的缺点就是移动性差，不能控制节目来源，也不能对电视机的节目进行控制。

另外一种实现手机电视的专利是通过在手机上加装配件，把有线电视信号接入到手机来实现。显然这样更缺乏的可移动性，也不具有通用性，不方便扩展。手机更新换代越来越快，为单一功能额外增加的模块难以被市场接受。

发明内容： 本发明正是基于这种娱乐扩展的需求而提出，其目的是利用越来越普及的家庭内无线网络和手机设备提供家庭娱乐的扩展，使得人们可以在家庭中娱乐无处不在，在观看电视节目的时候还能不切换电视机上电视频道的同时浏览其它频道的节目内容，使得对电视的娱乐得到很大的扩展。

为实现上述的目的，本发明提供了一种基于无线网络和微软 DirectShow 技术的电视流媒体编码传输移动设备播放控制的系统，包括电视信号接入，服务器端处理，电视机播放，智能手机设备接收播放部分。电视信号接入可以接收有线电视信号或者数字电视信号，进行两路信号的输入，服务器端获取对两个输入的信号的控制后分别进行处理，其中一个直接进行全屏幕描绘和音频设备的输出，通过连接到电视机上和音箱上进行播放，另一路信号对视频信号和音频信号分别进行编码压缩，一旦有网络设备连接成功，就发送编码后的音视频信号。服务器端设备可以是 PC 或者机顶盒。智能手机设备通过连接到无线网络，利用客户端程序对服务器进行连接，获取编码后的音视频信号，对信号进行解码并实时播放。客户端程序除了连接播放音视频信号，还能和服务器进行通信，发网络命令改变电视机或者手机端电视节目的频道。这个系统的服务器端和客户端主要使用 DirectShow 技术，在信号来源，编码，发送和接收过程中组成完整的链路，软件结构清晰，易于扩展替换各种编码，以适应不同的网络环境和不同性能的手机终端，兼容 MPEG2, h263, h264, MPEG4 各种编码解码标准。

同时，智能手机终端还具有控制功能。通过 Socket 连接，手机从服务器端获取各频道信息，包括电视机端播放的频道列表和手机端频道的播放列表。用户可以自由的选择两个不同播放设备的频道列表，并能立刻看到频道变换后的节目，不需要重新连接。同时，手机还能控制服务器输出的两路音频信号的音量大

小，使得手机除了具有移动播放电视的功能以外，还是一个通用的控制器。

系统的各部分具有以下特点：

输入信号来源可以是天线接收的普通电视，或者模拟信号的有线电视，也可以是数字电视信号。

服务器可以是普通的 PC, 机顶盒。

网络连接方式可以是家庭的无线网络，或者使用 Adhoc 进行自组网。

手机终端使用 WinCE5.0 或者以上版本操作系统的智能手机。

使用本发明的有以下明显的有益效果：

便利性：手机已经成为人们必备的通讯工具，电视也是家庭必备的娱乐工具，随着数字电视的推进，机顶盒也将成为家庭必备，所以本发明不需要专门的硬件设备，不会增加额外负担。

娱乐性：用户每一部只能手机在家里都成为移动的掌上电视和控制台，使得娱乐范围得到了扩展，于每个家庭的角落都能自由的观看和控制电视节目，不错过精彩的节目重要的新闻信息。

成本低：基于已有的设备和电视信号，自组的网络不会产生新的通信费用或者电视信号使用费用。

实施简单：只要有计算机网络基础知识的都可以轻松安装。

附图说明： 按照连接方式的不同，可以选择是否需要无线路由器，附图 1 的 4 部分为无线路由器，其它部分相同。

图中 1.第一路电视信号输入 2. 第二路电视信号输入 3. 服务器（PC 或机顶盒） 4. 无线路由器

5.无线网络 6.电视屏幕或者其他显示设备 7 智能手机

参见图 1，两路电视信号 1 和 2 输入到服务器 3，服务器获取对着两路信号的控制权后把其中一路输送到电视屏幕 6 上，另一路接到网络中，网络的介入方式可以是有线或者无线连接到家庭的无线路由 4 中。只能手机 7 通过无线连接到路由器上，接入网络，经过网络来访问服务器 3，取得经过编码的另一路电视信号进行播放，并且把控制命令经过网络发送到服务器中。

参见图 2，当家庭不需要组织无线网络时，直接在服务器 3 和智能手机 7 中分别建立 adhoc, 通过 adhoc 把两个设备建立一个无线网络，其它操作与图 1 相同。

实施方式： 本发明实施方式简单，有几种方法可以实现，可以在 PC 上安装两块电视卡，把电视信号分成两路分别接入。在 PC 上安装服务器端程序，以电视机作为屏幕显示。2 使用内置服务器程序和两路输入信号芯片的机顶盒，连接电视机即可。

网络接入方式也可以有多种，1 是直接使用网线或者无线接入到无线路由器，通过路由器使得家庭中的智能设备都组合到一个局域网内。2 是直接把 PC 或者机顶盒和手机建立 adhoc 连接，自组网为一个网络，实现连接。

手机端实施方式。手机需要 wince5.0 或以上版本，支持 wifi 功能，可以通过无线路由连接到家庭网络中或者以 adhoc 方式直接与服务器端连接，安装客户端程序，在启动程序后设定服务器的 ip 即可。

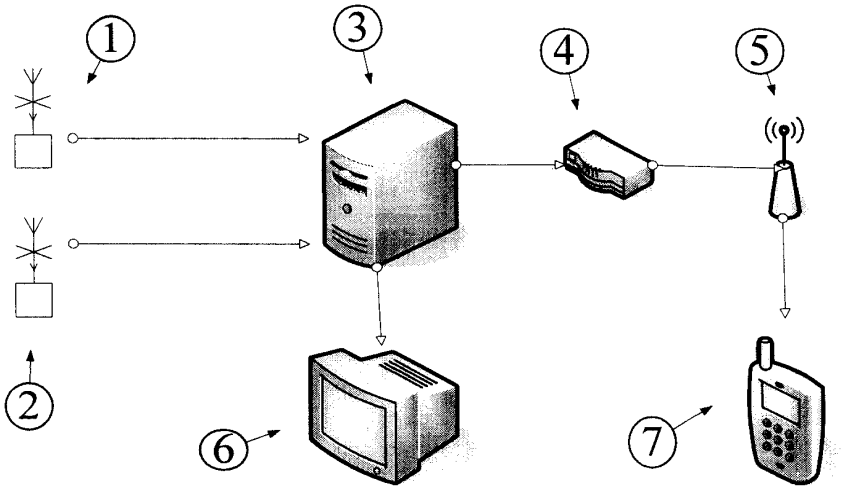

图 1

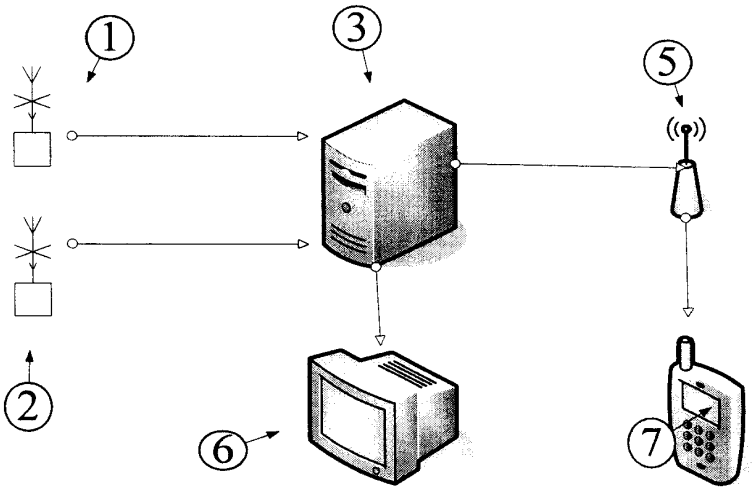

图 2

Espacenet

Bibliographic data: CN101778198 (A) — 2010-07-14

Enhanced-type TV terminal system

Inventor(s): CHEN JIN; XIN WANG; CAIBAO XU; GAOXIANG XU ± (JIN CHEN, ; WANG XIN, ; XU CAIBAO, ; XU GAOXIANG)

Applicant(s): SHANGHAI XIANGYUN INFORMATION ± (SHANGHAI XIANGYUN INFORMATION SYSTEM CO., LTD)

Classification: **- international:** ***G08C17/02; G08C23/04; H04N5/00***
- cooperative:

Application number: CN201010109683 20100125

Priority number(s): CN201010109683 20100125

Abstract of CN101778198 (A)

The invention relates to an enhanced-type digital terminal system which is connected with a TV by a audio/video cable and a control signal wire; the TV terminal system comprises a host module and an intelligent information display which are connected with each other, wherein the host module comprises a central processing unit (CPU), an integrated family wired/wireless broadband routing module, an integrated family intelligent appliance control module and an integrated TV signal access module which are connected with each other in parallel; the intelligent information display comprises a display terminal, a processing arithmetic unit, a microphone and a camera which are connected with each other in parallel; and the TV terminal system is configured with an interactive remote controller or a traditional infrared or radio frequency remote controller. The system leads the TV, a computer, domestic intelligent appliances, a security system, a mobile phone and the like to be integrated into a set top box of the TV and controlled on a touch screen, thus being simple and convenient for operation.

(19)中华人民共和国国家知识产权局

(12)发明专利申请

(10)申请公布号 CN 101778198 A
(43)申请公布日 2010.07.14

(21)申请号 201010109683.6

(22)申请日 2010.01.25

(71)申请人 上海享云信息系统有限公司
地址 200052 上海市长宁区凯旋路 1482 号 3 楼

(72)发明人 徐财宝 王歆 徐高翔 金辰

(74)专利代理机构 上海泰能知识产权代理事务所 31233
代理人 黄志达 谢文凯

(51)Int.Cl.
H04N 5/00(2006.01)
G06F 3/048(2006.01)
G08C 17/02(2006.01)
G08C 23/04(2006.01)

权利要求书 1 页 说明书 2 页 附图 1 页

(54)发明名称

一种增强型电视终端系统

(57)摘要

本发明涉及一种增强型数字终端系统，通过音视频线和控制信号线与电视机相接，所述的电视终端系统包括相互连接的主机模块和智能信息显示器，所述的主机模块包括相互并联的中央处理器、集成家庭有线／无线宽带路由模块、集成家庭智能家电控制模块和集成电视信号接入模块；所述的智能信息显示器包括相互并联的显示终端、处理运算器、麦克风和摄像头；所述的电视终端系统配置有互动型遥控器或传统红外或射频遥控器。本发明可将电视机、电脑、家用智能家电、安防系统及手机等集成在一个电视机顶盒触摸显示屏上进行控制，操作简单，方便。

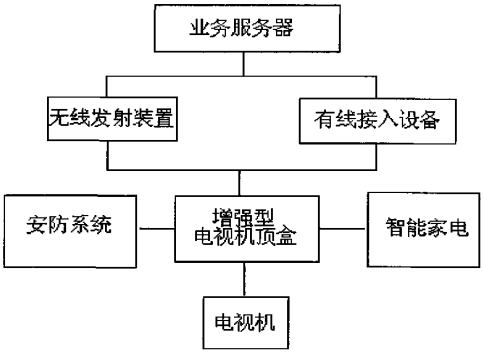

CN 101778198 A

1. 一种增强型电视终端系统，通过音视频线和控制信号线与电视机相接，其特征在于：所述的电视终端系统包括相互连接的主机模块和智能信息显示器，所述的主机模块包括相互并联的中央处理器、集成家庭有线／无线宽带路由模块、集成家庭智能家电控制模块和集成电视信号接入模块；所述的智能信息显示器包括相互并联的显示终端、处理运算器、麦克风和摄像头；所述的电视终端系统配置有遥控器。

2. 根据权利要求 1 所述的一种增强型电视终端系统，其特征在于：所述的遥控器为互动型遥控器或传统红外或射频遥控器。

3. 根据权利要求 1 所述的一种增强型电视终端系统，其特征在于：所述的中央处理器为 i386 或以上的处理器，所述的电视信号接入模块为集成 DVB-S、DVB-C、DVB-T；所述的显示终端为 3-22 英寸触摸显示屏。

4. 根据权利要求 1 所述的一种增强型电视终端系统，其特征在于：所述的有线及无线路由模块与家庭电脑或互联设备连接。

5. 根据权利要求 1 所述的一种增强型电视终端系统，其特征在于：所述的集成电视信号接入模块可将电视或 2 个以上显示终端共同接入，包括通过 RJ45 接口提供电信 IPTV 接入，通过 DVB-C 接口提供有线电视接入。

6. 根据权利要求 1 所述的一种增强型电视终端系统，其特征在于：所述的集成家庭智能家电控制模块通过 Wifi 或蓝牙或红外传输方式及 2 种以上不同协议连接智能家电并进行控制。

7. 根据权利要求 1 所述的一种增强型电视终端系统，其特征在于：所述的智能信息显示器与可视或语音门禁系统即安防系统连接，实现门禁控制及语音视频通话。

8. 根据权利要求 1 所述的一种增强型电视终端系统，其特征在于：所述的智能信息显示器通过与 3G、3G 宽带、GSM、CDMA、ADSL、CableModem 连接，实现与手机之间的视频或语音通话功能。

一种增强型电视终端系统

技术领域

[0001] 本发明属电视技术领域，特别是涉及一种增强型电视终端系统。

背景技术

[0002] 随着数字技术的迅速发展，电视信号正在取代模拟信号，进入电视行业，这使得用户能够更加清晰、方便地收看到电视节目。使用电视机顶盒能够让用户收到电视特有的优质服务，如电子界面指南，准视频点播，视频点播，数据广播，股票信息，直播回放等等。但是目前市场上的机顶盒往往都采用遥控器控制，使用起来不够方便，而且其功能的局限性大。

发明内容

[0003] 本发明所要解决的技术问题是提供一种可将电视机、电脑、家用智能家电、安防系统及手机等集成在一个电视机顶盒触摸显示屏上进行控制的电视终端系统。

[0004] 本发明解决其技术问题所采用的技术方案是：提供一种增强型电视终端系统，通过音视频线和控制信号线与电视机相接，所述的电视终端系统包括相互连接的主机模块和智能信息显示器，所述的主机模块包括相互并联的中央处理器、集成家庭有线／无线宽带路由模块、集成家庭智能家电控制模块和集成电视信号接入模块；所述的智能信息显示器包括相互并联的显示终端、处理运算器、麦克风和摄像头；所述的电视终端系统配置有互动型遥控器或传统红外或射频遥控器。

[0005] 所述的中央处理器为 i386 或以上的处理器，所述的电视信号接入模块为集成 DVB-S、DVB-C、DVB-T；所述的显示终端为 3-22 英寸触摸显示屏。

[0006] 所述的有线及无线路由模块与家庭电脑或互联设备连接。

[0007] 所述的集成电视信号接入模块可将电视或 2 个以上显示终端共同接入，包括通过 RJ45 接口提供电信 IPTV 接入，通过 DVB-C 接口提供有线电视接入。

[0008] 所述的集成家庭智能家电控制模块通过 Wifi 或蓝牙或红外传输方式及 2 种以上不同协议连接智能家电并进行控制。

[0009] 所述的智能信息显示器与可视或语音门禁系统即安防系统连接，实现门禁控制及语音视频通话。

[0010] 所述的智能信息显示器通过与 3G、3G 宽带、GSM、CDMA、ADSL、CableModem 连接，实现与手机之间的视频或语音通话功能。

[0011] 有益效果

[0012] 本发明可将电视机、电脑、家用智能家电、可视或语音门禁系统及手机等集成在一个电视机顶盒触摸显示屏上进行控制，操作简单，方便。

附图说明

[0013] 图 1 为本发明原理图。

具体实施方式

[0014] 下面结合具体实施例，进一步阐述本发明。应理解，这些实施例仅用于说明本发明而不用于限制本发明的范围。此外应理解，在阅读了本发明讲授的内容之后，本领域技术人员可以对本发明作各种改动或修改，这些等价形式同样落于本申请所附权利要求书所限定的范围。

[0015] 如图 1 所示，本发明的电视终端系统，通过音视频线和控制信号线与电视机相接，电视终端系统包括相互连接的主机模块和智能信息显示器，其中：

[0016] 1）主机模块包括：

[0017] 以 i386 或其他高性能处理作为中央处理器。

[0018] 集成家庭有线 / 无线宽带路由。

[0019] 集成家庭智能家电控制模块。

[0020] 集成 DVB-S、DVB-C、DVB-T 等电视信号接入模块。

[0021] 2）智能信息显示器：

[0022] 以 3-22 英寸触摸显示屏作为显示终端。

[0023] 具备处理运算能力。

[0024] 具备麦克风。

[0025] 具备摄像头。

[0026] 3）互动型遥控器或传统红外或射频遥控器

[0027] 所述的智能互动遥控器包括相互并联的集成蓝牙通信模块、集成 Wifi 通信模块、集成射频发射及接收模块、集成红外发送及接收模块、集成 Z-wave 发射及接收模块、集成 ZigBee 发射及接收模块和集成 GSM/GPRS 通讯模块。

[0028] 电视终端系统能够提供下列服务：

[0029] 1）家庭电脑或其他需要互联设备可通过本系统提供的有线及无线路由模块实现互联及与互联网接入。

[0030] 2）电视或其他显示终端可通过本系统提供的电视业务实现不同运营商及不同电视接入方式的共同接入。如：通过本机提供的 RJ45 接口提供电信 IPTV 接入，通过 DVB-C 接口提供有线电视接入等。

[0031] 3）可视或语音门禁系统可与本系统提供的智能信息显示器连接，实现门禁控制及语音视频通话。

[0032] 4）本系统可通过 Wifi、蓝牙、红外等传输方式及多种不同协议与连接智能家电并进行控制。

[0033] 5）本系统通过智能信息显示器，以不同的连接方式如 3G、3G 宽带、GSM、CDMA、ADSL、CableModem 实现与 3G 手机或其他手机之间的视频或语音通话功能。

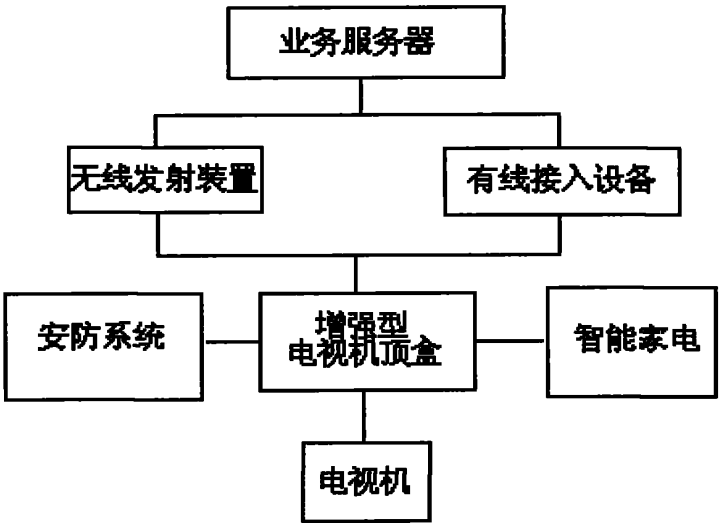

图 1

Espacenet

Bibliographic data: CN101815073 (A) — 2010-08-25

Embedded Bluetooth-Ethernet server

Inventor(s): JINGTAI CAO; SHUANG GUO; JIANLU JIA; BIN WANG; MINGHAO WANG; YUANHAO WU; QINGYUN YANG; JINYU ZHAO ± (CAO JINGTAI, ; GUO SHUANG, ; JIA JIANLU, ; WANG BIN, ; WANG MINGHAO, ; WU YUANHAO, ; YANG QINGYUN, ; ZHAO JINYU)

Applicant(s): CHANGCHUN OPTICS FINE MECH ± (CHANGCHUN INSTITUTE OF OPTICS, FINE MECHANICS ANDPHYSICS, CHINESE ACADEMY OF SCIENCES)

Classification: **- international:** ***H04B5/00; H04L12/28; H04L29/06***
- cooperative:

Application number: CN201010143686 20100412 Global Dossier

Priority number(s): CN201010143686 20100412

Abstract of CN101815073 (A)

The invention relates to an embedded Bluetooth-Ethernet server and provides a new method for watching network TV and requesting a video through a mobile phone and an analog TV set. In the Ethernet server, the internet, an analog TV network and a Bluetooth network are integrated, so that functions of watching the network TV or requesting a network video and the like through a mobile phone terminal and the traditional analog TV set at the same time are realized. The network TV is watched through the mobile phone terminal by adopting a Bluetooth protocol to communicate without paying mobile network using fee. The Bluetooth-Ethernet server adopts an embedded design, integrates external interface equipment, such as an Ethernet interface, a storage, an infrared receiver (AV) and a VGA interface and the like, transplants a Bluetooth protocol stack into an embedded operation system at the same time, and can simultaneously establish connection with the analog TV set and seven mobile phone terminals. The embedded Bluetooth-Ethernet server of the invention can reach a video transmission speed of 15 to 20fps for the analog TV set and the mobile phone terminal under VGA resolution and CIF resolution respectively and guarantee that audio and video are synchronous.

(19)中华人民共和国国家知识产权局

(12)发明专利申请

(10)申请公布号 CN 101815073 A
(43)申请公布日 2010.08.25

(21)申请号 201010143686.1

(22)申请日 2010.04.12

(71)申请人 中国科学院长春光学精密机械与物理研究所
地址 130033 吉林省长春市东南湖大路3888号

(72)发明人 曹景太 赵金宇 杨轻云 吴元昊 王鸣浩 王斌 贾建禄 郭爽

(74)专利代理机构 长春菁华专利商标代理事务所 22210
代理人 张伟

(51)Int.Cl.
H04L 29/06(2006.01)
H04L 12/28(2006.01)
H04B 5/00(2006.01)

权利要求书 1 页 说明书 3 页 附图 3 页

(54)发明名称

一种嵌入式蓝牙-以太网服务器

(57)摘要

本发明涉及一种嵌入式蓝牙-以太网服务器，提供一种手机和模拟电视机观看网络电视及视频点播的新方法。将互联网络，模拟电视网络及蓝牙网络有机结合，实现手机终端和传统模拟电视机同时观看网络电视或点播网络视频等功能。其中手机终端观看网络电视采用蓝牙协议通信，无需缴纳移动网络使用费用。蓝牙-以太网络服务器采用嵌入式设计，集成以太网接口，存储器，红外接收器AV及VGA接口等外部接口设备，同时将蓝牙协议栈移植至嵌入式操作系统中，可同时与一台模拟电视机及七台手机终端建立连接。本发明对于模拟电视和手机终端可分别实现VGA和CIF分辨率下15-20fps的视频传输速率，并保证音视频同步。

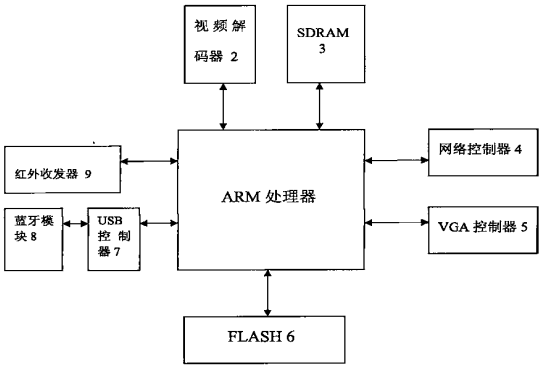

CN 101815073 A

1. 一种嵌入式蓝牙以太网服务器，其特征在于包括 ARM 处理器 (1)，视频解码器 (2)，SDRAM(3)，网络控制器 (4)，VGA 控制器 (5)，FLASH(6)，USB 控制器 (7)，蓝牙模块 (8) 和红外控制器 (9)，ARM 处理器 (1) 与 SDRAM(3) 和视频解码器 (2) 及 FLASH(6) 通过外部数据接口连接，采用并行数据通信通信；ARM 处理器 (1) 与红外控制器 (9) 采用通用 I/O 连接；ARM 处理器 (1) 与网络控制器 (4) 采用标准网络接口连接；ARM 处理器 (1) 与蓝牙模块 (8) 通过 USB 控制器 (7) 连接，ARM 处理器 (1) 与 VGA 控制器 (5) 采用数据接口连接，ARM 处理器 (1) 内嵌 BlueZ 协议栈。

2. 根据权利要求 1 所述嵌入式蓝牙 - 以太网服务器，手机通过无线蓝牙网络与蓝牙模块 (8) 连接，采用蓝牙协议通信，利用 J2ME API 调用解码库对音视频数据进行解码，并实时显示。

一种嵌入式蓝牙－以太网服务器

技术领域：

[0001] 本发明涉及一种嵌入式系统的蓝牙－以太网络音视频处理平台。

背景技术：

[0002] 随着通信技术、网络技术及嵌入式系统的发展，网络视频传输已成为了可能。目前，更多的新闻等信息采用视频方式发布，优酷、土豆等视频网站层出不穷，PPLive，SopCast 等视频直播及点播软件也成为网络用户的必备软件。随着带宽的不断增加及视频编码技术的发展，视频质量和速率越来越高。但是传统的家庭用户仍然习惯于采用电视机作为信息获取的重要来源，也作为视频观看的第一终端，如果采用主机连接显示器的方式不但给用户来带不便，更大大降低了资源利用率。如何提高资源利用率的同时满足传统用户的习惯成为大家研究的话题。

[0003] 近年来移动通信高速发展，手机的性能不断提高，短距离无线通信技术也随之迅速发展。蓝牙，Zigbee，UWB 及 RFID 等技术越发成熟，其中蓝牙已成为手机必备通信模块；另外，手机正朝着智能性方向发展，JAVA 为手机的智能化提供了充足的条件。目前，如何将各种设备有机结合，尤其是不同网络接口的设备的高效利用成为热门话题，将传统的电视机系统，以太网络系统，蓝牙网络系统有机结合将具有较为广阔的应用场景。

发明内容：

[0004] 针对上述问题，本发明目的在于设计一种嵌入式蓝牙－以太网服务器，包括 ARM 处理器，视频解码器，SDRAM，红外收发器，网络控制器，FLASH，蓝牙模块和 VGA 控制器、USB 控制器。嵌入式处理器与蓝牙模块通过 USB 接口连接；嵌入式处理器与视频解码器通过高速数据接口连接；视频解码器与电视机通过模拟视频接口连接，可采用 AV 或 VGA 接口；嵌入式处理器与网络模块通过标准网络接口连接；网络模块通过因特网连接视频服务器，采用 TCP/IP 协议通信，音视频传输采用基于 UDP 的 RTP 协议；手机通过无线蓝牙网络与蓝牙模块连接，采用蓝牙协议通信，利用 J2ME API 调用解码库对音视频数据进行解码，并实时显示。

[0005] 本发明的有益效果在于将传统的模拟电视网络，以太网络及蓝牙网络有机的结合，充分的利用了因特网，模拟电视机及手机等资源。系统采用嵌入式技术，大大节省了空间，并提高了利用率，降低功耗和成本。可观看诸如上海体育、ESPN 等网络电视频道，并可点播最新电影及电视剧。省去来了大量的机顶盒使用费用，及手机上网费用，系统可同时与一台模拟电视机及七台手机终端建立连接及传输音视频数据。

附图说明

[0006] 图 1 为本发明的系统结构框图

[0007] 图 2 为嵌入式蓝牙－以太网服务器结构图

[0008] 图 3 为本发明的嵌入式软件流程图

[0009] 图 4 为本发明的手机终端软件流程图

[0010] 图 5 为本发明的嵌入式蓝牙 - 以太网服务器与手机终端音视频通信协议格式

具体实施方式

[0011] 下面结合附图具体说明本发明

[0012] 如图 2 所示，嵌入式蓝牙 - 以太网服务器包括 ARM 处理器 1，视频解码器 2，SDRAM3，网络控制器 4，VGA 控制器 5，FLASH6，USB 控制器 7，蓝牙模块 8 和红外控制器 9 组成。ARM 处理器 1 与 SDRAM3 和视频解码器 2 及 FLASH6 通过外部数据接口连接，采用并行数据通信通信；ARM 处理器 1 与红外控制器 9 采用通用 I/O 连接，便于驱动设计；ARM 处理器 1 与网络控制器 4 采用标准网络接口连接；ARM 处理器 1 与蓝牙模块 8 通过 USB 控制器 7 连接，ARM 处理器 1 内嵌 BLUEZ 协议栈，可完成蓝牙协议配置及操作；ARM 处理器 1 与 VGA 控制器 5 采用数据接口连接，便于驱动显示器设备。

[0013] 如图 3 所示，首先嵌入式服务器通过网络接口采用 TCP/IP 协议与网络视频服务器建立连接，并通过蓝牙接口监视手机发出的连接请求。当与服务器连接成功并与手机建立蓝牙连接后，等待手机发送的蓝牙命令并解析判别。如果为用户反馈命令，则接收用户反馈命令并执行，然后给出用户反馈命令确认；如果为音视频传输命令，则动态创建缓冲区，采用 RTP 协议接收网络服务器发出的音视频数据并缓冲，将数据分成两部分，一部分实时解码显示在电视机上，另外一部分送至手机终端解码显示。完成一次操作后回到等待用户命令状态。

[0014] 如图 4 所示，手持终端软件开启后搜索周围蓝牙设备，采用蓝牙协议与嵌入式服务器建立连接，然后等待用户输入命令。若用户输入接收音视频数据命令，则动态创建缓冲区，通过蓝牙协议接收音视频数据并解码显示；若为用户反馈命令，则创建命令发送队列，发送反馈命令。结束一次操作后回到等待用户输入命令状态。

[0015] 如图 5 所示，嵌入式蓝牙 - 以太网服务器与手机终端通信协议采用 RTP 协议，其协议各数据位如下：

[0016] ● P：间隙 (Padding)。数据包包含一个或多个附加间隙位组，其中这部分不属于有效载荷。

[0017] ● X：扩展位。设置时，在固定头后面，根据指定格式设置一个扩展头。

[0018] ● CSRC Count：包含 CSRC 标识符的编号。

[0019] ● M：标记。标记由 Profile 文件定义，允许重要事件（如帧边界）在数据包流中进行标记。

[0020] ● Payload Type：识别 RTP 有效载荷的格式，并通过应用程序决定其解释。Profile 文件规定了从 Payload 编码到 Payload 格式的缺省静态映射。另外的 Payload Type 编码可能通过非 RTP 方法实现动态定义。

[0021] ● Sequence Number：每发送一个 RTP 数据包，序列号增加 1，接收端可以依此检测数据包的丢失并恢复数据包序列。

[0022] ● Timestamp：反映 RTP 数据包中的第一个八位组的采样时间。采样时间必须通过时钟及时提供线性无变化增量，以支持同步和抖动计算。

[0023] ● SSRC：同步源。该标识符随机选择，旨在确保在同一个 RTP 会话中不存在两个

同步源具有相同的 SSRC 标识符。

[0024] ● CSRC：贡献源标识符。识别该数据包中的有效载荷的贡献源。

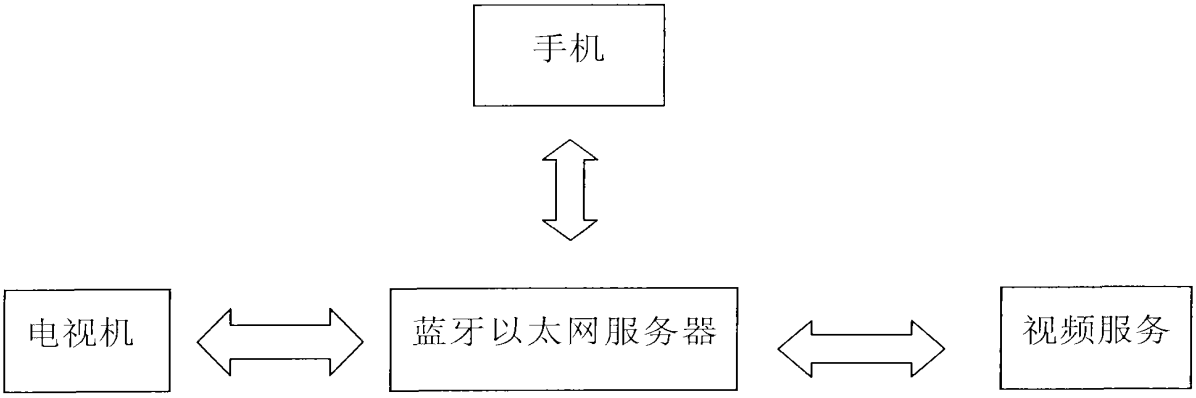
手机
电视机
蓝牙以太网服务器
视频服务

图 1

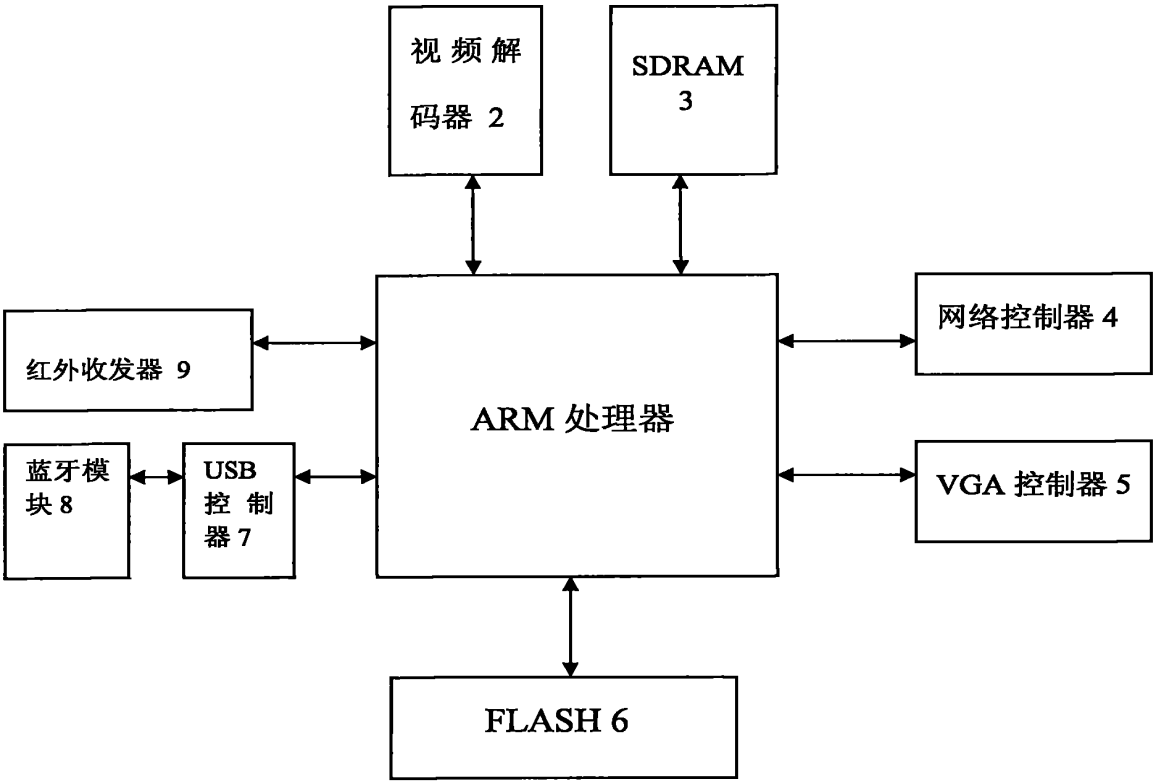
视频解码器 2
SDRAM 3
红外收发器 9
ARM 处理器
网络控制器 4
蓝牙模块 8
USB 控制器 7
VGA 控制器 5
FLASH 6

图 2

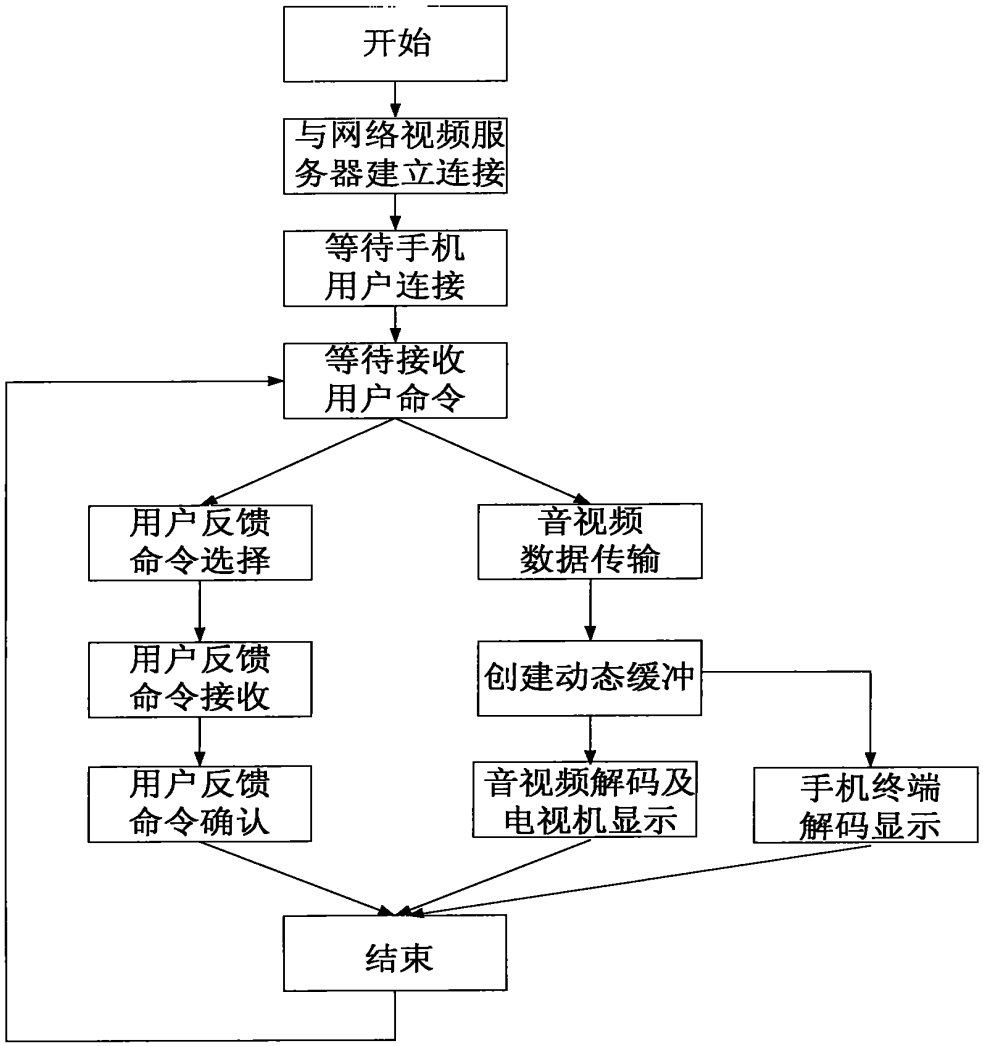
开始
与网络视频服务器建立连接
等待手机用户连接
等待接收用户命令
用户反馈命令选择
音视频数据传输
用户反馈命令接收
创建动态缓冲
用户反馈命令确认
音视频解码及电视机显示
手机终端解码显示
结束

图 3

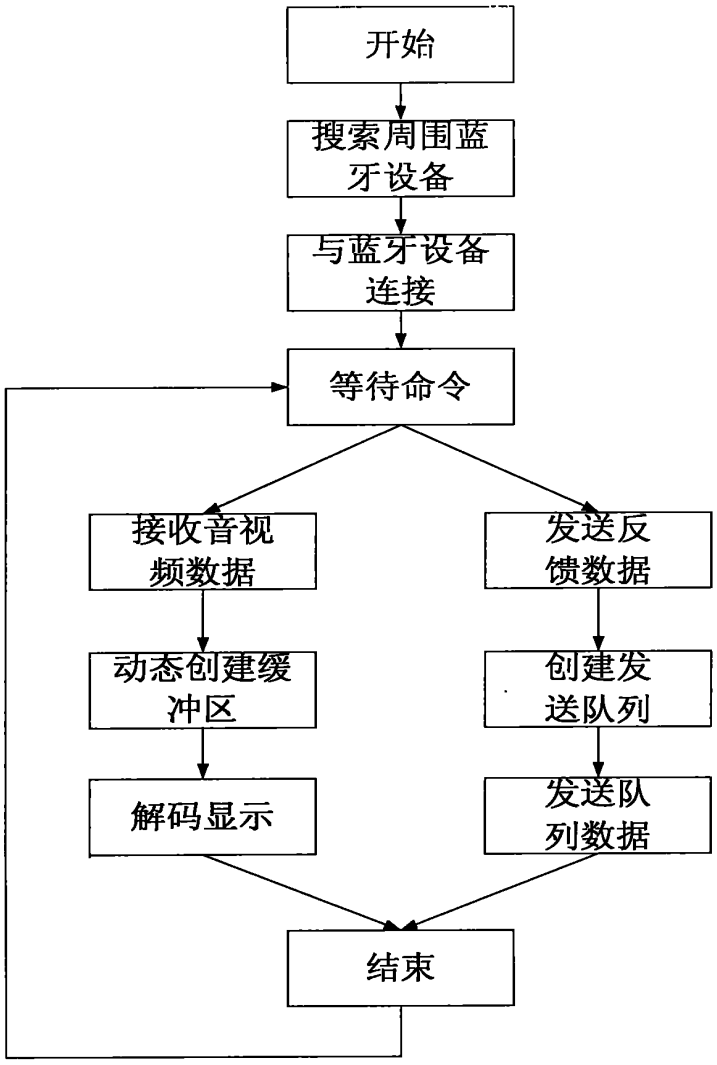

图 4

P	X	CSRC Count	M	Payload Type	Sequence number	Time stamp	SSRC	CSRC

图 5

(19) Europäisches Patentamt
European Patent Office
Office européen des brevets

(11) EP 2 175 607 A1

(12) EUROPEAN PATENT APPLICATION

(43) Date of publication:
14.04.2010 Bulletin 2010/15

(51) Int Cl.:
H04L 29/06 (2006.01)

(21) Application number: **08166122.5**

(22) Date of filing: **08.10.2008**

(84) Designated Contracting States:
AT BE BG CH CY CZ DE DK EE ES FI FR GB GR HR HU IE IS IT LI LT LU LV MC MT NL NO PL PT RO SE SI SK TR
Designated Extension States:
AL BA MK RS

(71) Applicant: **NEC Corporation**
Minato-ku
Tokyo 108-8001 (JP)

(72) Inventor: **Fok Ah Chuen, Frederic**
92100, BOULOGNE-BILLANCOURT (FR)

(74) Representative: **Ilgart, Jean-Christophe et al**
Brevalex
3, rue du Docteur Lancereaux
75008 Paris (FR)

(54) Method for establishing a thin client session

(57) The invention concerns a method for establishing a Thin Client session between a Thin Client device (2) and a Thin Client Server (4) exchanging Handshaking and initialization messages during a session negotiation above a SIP-based framework, wherein said Thin Client device (2) and said Thin Client Server (4) exchange additional information representative of the Thin Client context (30,32) enabling the combination and adaptive transfer of multiple media streams in at least one remote application display during said thin client session.

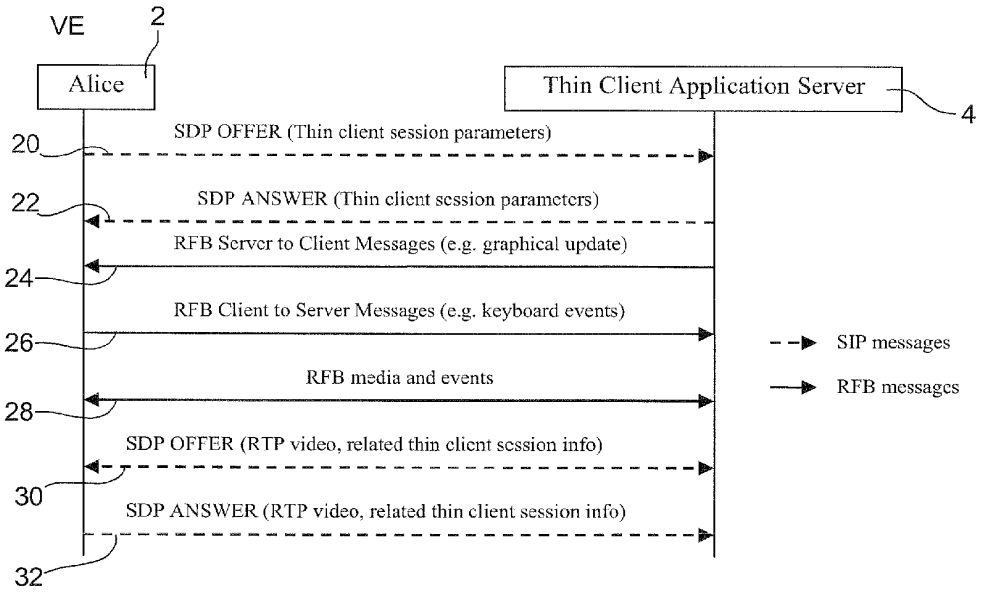

Fig 3

EP 2 175 607 A1

Printed by Jouve, 75001 PARIS (FR)

Description

TECHNICAL DOMAIN

[0001] The invention pertains to telecommunication field and relates to a new session description to initiate a thin client system working above a SIP-based framework such as IMS.

[0002] More specifically, the invention concerns a method for improving the establishment of a Thin Client connection between a thin client device and a thin client server exchanging handshaking and initialization messages during a session negotiation above a Session Initiation Protocol (SIP)-based framework.

[0003] The invention concerns also a thin client device and thin client server adapted for implementing said method.

STATE OF PRIOR ART

[0004] The Session Description Protocol (SDP) [IETF RFC4566] is intended for describing multimedia sessions for the purposes of session announcement, session invitation, and other forms of multimedia session initiation. SDP is most commonly used for describing media streams that are transported over the Real-Time Transport Protocol (RTP) [IETF RFC3550], using the profiles for audio and video media defined in RTP Profile for Audio and Video Conferences with Minimal Control [IETF RFC3551]. Besides the MIME Type registration of RTP Payload Formats [IETF RFC3555] defines the RTP payload format for Audio and Video Conferences as MIME subtypes.

[0005] However, SDP can be used to describe other media profile than Audio and Video that can be transported over Real-time Transport Protocol (RTP). SDP is commonly carried in Session Initiation Protocol (SIP) [IETF RFC3261] messages in order to agree on a common media description among the endpoints. An Offer/Answer Model with Session Description Protocol (SDP) [IETF RFC3264] defines a framework by which two endpoints can exchange SDP media descriptions and come to an agreement as to which media streams should be used, along with the media related parameters.

[0006] In the typical case of a thin client session, it might be desirable to configure and establish media streams for remote desktop/application display as well as for control events over a packet or circuit switched bearer connection. Such session is usually achieved using thin client protocols such as Virtual Network Computing (VNC) based upon Remote Frame Buffer (RFB) Protocol or Remote Desktop Protocol (RDP), but also Independent Computing Architecture protocol (ICA), X11 protocol. Besides, pixels could even be streamed using Real-time Transport Protocol (RTP) and as such graphics primitives would be carried in RTP packets.

[0007] In the context of mobility, next generation network, and rich media application, it is important to note that Quality of Service (QoS), adaptivity, and authentication are key points and inspecting the media format is important as well for the resource reservation process and for the operator to control the radio bearer traffic as well as the IP flows (e.g. to apply appropriate resource allocation based on a given policy, user subscription, or service profile). Besides IP Multimedia Subsystem (IMS) - based on SIP and providing an overlay network above a core network - as defined by the Third Generation Partnership Project [3GPP TS 23.228] is also capable to interconnect with a Policy and Charging Control Architecture [3GPP TS 23.203] including the ability to authorize QoS resources.

[0008] Since applications range from simple text and/or graphic based application to audio and/or video based application that can suffer from network delays and high gigue ratio, a way to adapt to different types of traffic within a remote desktop control session is required.

[0009] From a Service aspect it is foreseen to combine a remote desktop access with other services such as phone call establishment or push-to-x services. By using SIP it becomes possible to extend traditional remote desktop control use cases.

[0010] From a QoS aspect it is also desirable to enable QoS control over the thin client media description. For instance Graphics and Events type of media can be allocated a predefined QoS profile, they could even be streamed over a packet or circuit switched bearer connection. Besides when a thin client device is moving, the access network environment may change so it might be desirable to re-allocate the appropriate quality settings (resource allocation, renegotiation of media parameters such as codecs, transport protocol, etc...).

[0011] From an authentication perspective, however, the well known thin client protocols use their own set of rules and mechanisms (i.e. a built-in negotiation) to authenticate and establish a connection between a thin client device and a thin client server.

[0012] The techniques of the prior art do not provide means to mix and adapt multimedia transfers such as audio/video with/to remote desktop control capabilities above a SIP framework.

[0013] The invention aims at adding remote desktop control to existing functionalities in order to negotiate the media within a SIP session and allow adaptive media transfer (i.e. video transfer, audio transfer, ...) pertaining to a session of remote desktop control.

PRESENTATION OF THE INVENTION

[0014] The object of the invention is achieved by a method for establishing a thin client connection between a thin client device and a thin client server exchanging handshaking and initialization messages during a Session negotiation above a Session Initiation Protocol (SIP)-based framework.

[0015] According to the invention, said Thin Client device and said Thin Client Server exchange additional in-

formation representative of the Thin Client context to enable the combination and adaptive transfer of multiple media streams in at least one remote application display during said thin client session.

[0016] The additional information allows both multimedia transfers and remote desktop control capabilities and may consists of Thin Client information formatted in SDP (Session Description Protocol) offer/answer messages or XML-based offer/answer messages embedded in the body of SIP messages.

[0017] The remote desktop control capabilities comprise the function consisting of dynamically directing or redirecting graphical updates of at least one remote application from a first device onto a second device.

[0018] Said first device may be a mobile communication device and said second device may be a fixed communication device.

[0019] According to another aspect of the invention, said remote desktop control capabilities further comprise the function consisting of transferring uplink events, eventually on a separate radio bearer and/or separate IP connection than the one used for the downlink graphical updates. The radio bearer is a Layer 2 service used to transfer user data between User Equipment and radio access network as per 3GPP definition. A separate IP connection can be achieved by allocating different port number or through IP tunneling mechanisms without or with encryption (i.e. IPSec).

[0020] The remote desktop control capabilities further comprise function consisting of associating at least one audio/video stream to a session of remote desktop control (i.e. a thin client session).

[0021] In one embodiment of the invention, said additional information comprises remote display framebuffer coordinates and size corresponding to said audio/video streams associated to said thin client session. Said framebuffer coordinates and size enable to appropriately position the video rendering above the remote desktop display on the local screen of the device.

[0022] Moreover, said additional information allow sending a client request (FramebufferForgetRequest) instructing the server that a specific area on the framebuffer does not require update.

[0023] In another embodiment of the invention said additional information comprise window-id attribute and allow sending a client request (WindowUpdate) instructing a server that a graphical area identified by said window-id attribute has been resized, moved or both.

[0024] Thanks to the method according to the invention, it is possible to:

- allow the combination of services
- enable control of the display redirection of a remote application from a mobile device,
- enable Quality of Service as well as accurate session control
- enable the use a uniform negotiation to avoid a wide range of specific thin client authentication and media negotiation mechanisms.

[0025] Thanks to the invention, the negotiation steps of known protocols such as RFB or ITU T.120 (Data Protocol for multimedia conferencing) are partially or totally replaced by the SDP-based negotiation and new information is provided to allow mixing media traffic for a remote display connection. Negotiating such a thin client connection using the SDP and SIP framework provides flexibility in that the signaling and the control of the thin client session is distinguished from the screen update strategy applied by the previously cited well known thin client protocols. Advantageously the thin client session can benefits from session redirection feature and other well known SIP and SDP extensions.

[0026] In addition the thin client connection could be accurately tracked and controlled within the IP Multimedia Subsystem [3GPP TS 23.228] that is standardized by the Third Generation Partnership Project.

[0027] In some typical use cases, it might be desirable to send the uplinks user events such as the well known key and mouse events in another radio bearer and/or IP connection than the one in which are sent the graphical updates. By doing so Quality of Service can be applied and a strategy can be made as to regulate the responsiveness of the system, for instance by guaranteeing very high priority to the events bearer. Furthermore, in a mobility context, a mobile device might move from a wireless network area where a high bandwidth packet-switched bearer is available to another area where a Wireless Local Area Network (WLAN) connection with lower bandwidth is available. Therefore, the graphics media may suffer from delay and bandwidth variations. It is therefore desirable to renegotiate the session parameters and this can be done by using SIP and SDP offer/answer model and IMS mobility management procedures.

[0028] By using the proposed invention, it is possible to establish an uplink bearer to send user events and a downlink bearer to receive graphical updates. At the Thin Client device it is also possible to define alternative transport protocol to prepare the viewer to adapt to the viewer transmission mode (e.g. To switch from RFB/VNC over TCP protocol to RTP protocol) to enable some portion of screen display where a film is played and to be streamed using RTP while the background is just periodically updated using the RFB protocol. If a viewer does not support an alternative mechanism, it will just not be accepted during the negotiation phase.

[0029] The method according to the invention can be implemented with any other SIP and SDP extensions (RFC3108, RFC4975, draft-garcia-mmusic-sdp-cs-01,) without departing from the scope of present invention The method according to the invention is implemented by a thin client device and a thin client server comprising means for exchanging with said thin client server additional information representative of the Thin Client context to enable the combination and adaptive transfer of multiple media streams in at least one remote application

display during said thin client session, said additional information consisting of SDP (Session Description Protocol) offer/answer messages Or XML-based offer/answer messages embedded in the body of SIP messages.

[0030] Said thin client device may be a Mobile User Equipment comprising an interface to enable a user to register interest in media redirection in order to get notified upon reception of said media redirection, and to send a redirection answer.

[0031] Moreover, said Mobile User Equipment is adapted for establishing a separate IP connection for uplink events for triggering the allocation of separate radio bearer for transferring said uplink events on a separate radio bearer than the one used for downlink graphical updates, and for mapping the rendering of audio/video stream(s) to said remote display framebuffer on its screen. Said Mobile User Equipment comprises an interface to enable a user to register interest in media redirection in order to get notified upon reception of said media redirection, and to send a redirection answer.

[0032] The invention also concerns a Thin Client Server adapted for implementing the method according to the invention for establishing a Thin Client session with a Thin Client device, said Thin Client Server comprises means for exchanging with said Thin Client device additional information representative of the Thin Client context to enable the combination and adaptive transfer of multiple media streams in at least one remote application display during said thin client session.

[0033] The invention allows an extension of the media types defined in ongoing work [draft-garcia-mmusic-sdp-collaboration-00] and defines new thin client media types and attributes.

[0034] To do so, the invention proposes to define the Control-Event media type. The existing "Control" media type is used to specify an additional conference control channel for the session. We need to use a different media type to precise a control channel for user events such as pointer or key events.

[0035] Finally the invention provides a way to mix multimedia streams with Thin Client remote display streams. The "Grouping of Media Lines in SDP" [IETF RFC3388] provides means to group media streams to express how different media streams within a session relate to each other, more particularly for the purpose of Lip synchronization or Flow identification. It should be noted that the grouping mechanisms depends on the semantic of the "a=group" session-level attribute. So we provide a new semantic for the thin client ("TC") context.

[0036] The implementation will be illustrated based on RFB protocol.

BRIEF DESCRIPTION OF THE FIGURES

[0037] The forgoing summary, as well as the following detailed description, will be better understood when read in conjunction with the appended figures illustrating an exemplary embodiment of the invention in which:

- Figure 1 schematically illustrates an IMS-based architecture;
- Figure 2 illustrates a thin client viewer showing a remote desktop consisting of several areas that can dynamically be adapted;
- Figure 3 illustrates a flow chart describing the steps of the method according to the invention
- Figure 4 schematically illustrates a an example of application display redirection according to the invention;

DESCRIPTION OF A DETAILED EMBODIMENT OF THE INVENTION

[0038] The invention will be described by reference to figure 1 illustrating an IMS architectural framework defined by the third generation partnership project [3GPP TS 23.228] for delivering IP multimedia services to a mobile device. The architecture comprises mobile user equipment 2 acting as a thin client device, a thin client server 4, a IMS Core System 6, a Policy Decision Function module 8 (PDF), a 3GPP Packet Switch (PS) Core Network 10. The IMS Core System 6 mainly comprises a Call Session Control Functions (CSCF) including Proxy-CSCF (P-CSCF), Serving-CSCF (S-CSCF), and Interrogating-CSCF (I-CSCF). The CSCF provides session control for subscribers accessing services within the IM (IP Multimedia) Core System 6. In essence the CSCF is a SIP Server. It has responsibility for interacting with network databases such as the HSS for mobility and AAA (Access, Authorization and Accounting) Servers for security. These modules are required to process SIP signalling packets in the IMS.

[0039] IMS Application Servers execute services and interface with S-SCSF. Some interfaces are illustrated in figure 1, as defined in [3GPP 23.228]:

The ISC interface is used to exchange messages between CSCF and thin client server 4.
The Gm interface is used to exchange SIP-based information between UE 2 and CSCF.
The GQ interface is used to exchange information policy decision information between CSCF and Policy Decision Function (PDF).
The interface Cx is intended for the communication between CSCF and Home Subscription Server (HSS) and the interface Dx for finding the correct HSS in multi-HSS environment.
The interface Sh used by the thin client Server 4 for communicating information with the HSS or with SIP/OSA Service Capability Server (OSA/SCS).
The interface Go used to control and authorize the Quality of Service and exchange correlation information between IMS and the 3GPP Policy and Charging Control (PCC) Architecture [3GPP TS 23.203].
The interface Ut used for controlling the Application Server and is based on HTTP protocol.

[0040] When using the IMS SIP signaling protocol the Thin Client UE 2 can connect to the IMS Thin Client Application Server (TCAS) 4 as depicted in figure 1 by establishing a SIP session. During this process, the Thin Client UE 2 and the TCAS 4 can negotiate the QoS and media parameters. The UE 2 may also perform some configurations on this TCAS 4 through the Ut interface, for instance to configure the desktop environment. The pixels generated by the application are streamed to the UE 2 in an end-to-end manner via Ut* interface and video or audio media can be streamed to the UE 2 too.

[0041] The method according to the invention extends SDP to describe the thin client session, the associated media, and the remote control events. An alternative would be to provide said description using XML syntax as defined by the W3C Extensible Markup Language (XML) 1.0 (Fourth Edition).

[0042] More particularly, the method allows the association of at least one audio/video stream to a thin client connection negotiated using SIP signaling in such a way that audio and/or video IP flows can be added dynamically and adaptively to a SIP session of remote desktop control whose associated IP flows can be rendered through thin client protocol mechanisms like RFB.

[0043] The following description provides the syntax and semantics of the extensions required for providing a description of a Thin Client session in SDP.

[0044] According to SDP [IETF RFC4566], the connection data line in SDP has the following syntax:

c = <nettype> <addrtype> <connection-address>

[0045] Where <nettype> indicates the network type, <addrtype> indicates the address type, and the <connection-address> is the connection address, which is dependent on the address type.

[0046] Basically the SDP announcement consists of a session-level section followed by one or more media-level sections as described in SDP [IETF RFC2327]. Session-level information provides the default values so if the connection data line is present at the session-level it applies to the media-level section unless the connection data line is conveyed in a media description. Note that if the connection data line is present in all media, it is not required at the session level.

[0047] The media description starts with an "m=" line and continues to the next media description or end of the whole session description. The "m=" media line as defined in IETF RFC4566 is as follows

m=<media><port><transport><fmt list>

[0048] Where the <media> is the media type, <port> is transport port to which the media stream will be sent, <transport> is the transport protocol whose value is dependent on the "c=" fields, and <fmt list> represents media formats. For audio and video the media formats are normally media payload type as defined in the RTP Audio/Video Profile.

[0049] At the moment the media types are defined for audio, video, application, data and control.

[0050] Thin client media types.

[0051] We initially consider the Remote Frame Buffer (RFB) protocol that can be used to control the display updates and for which various encoding are available.

[0052] The media type can be specific to the thin client technology. The media types can be "application/rfb", "application/T120".

m=application <port> <transport> RFB.

[0053] We further focus on the Remote Frame Buffer protocol in this document.

[0054] Thin client control event media types.

[0055] In addition to the graphical updates of the remote display, it is also possible to establish a specific connection for uplink events. For this purpose, the media type "application/control-events" is defined and the media line is:

m = application <port> <transport> control-events.
RFB specific attributes.

[0056] The attribute version "v=" must be given and it refers to the RFB protocol version number.

a=v: <version_number>

[0057] Where the version_number can be "3.8" meaning that RFB protocol version 3.8 applies.

[0058] The client may specify a list of supported encoding types in priority order. The encoding type is indicated in the framebuffer update messages sent by the Thin Client Server. It can be requested by the client to the server in usual RFB specific "setEncoding" messages. The server may or may not use this indication and pixel data may always be sent in raw encoding if required.

[0059] The encoding scheme attributes is in the form:

a=encoding-scheme: <encoding scheme value>

[0060] Where the <encoding scheme value> can be "RAW", "COPYRECT", "RRE", "HEXTILE", "ZLRE", "CURSOR", "CORRE", "ZLIB", ...

[0061] The display number may also be specified. If it is not indicated, then a default port is allocated. Actually the RFB server default port number is usually equal to (5900 + display_number) where display_number usually range from 0 to 6 resulting in 6 possible display connections.

[0062] The display attribute is in the form:

a=dpy: <display_number>

[0063] In the case of RFB protocol, the following additional attributes are provided.

[0064] The client may indicate whether the session is shared or not. If not indicated, the session must not be shared.

a=shared

[0065] The server must indicate the framebuffer size:

a=framebuff-w: <the width value>
a=framebuff-h: <the height value>

[0066] The client may indicate the following attributes as a preference and the server must indicate those attributes.

- a=pixformat-bpp: <bit-per-pixel value>
- a=depth: <depth value>
- a=big-endian
- =true-color
- a=red-max: <red-max value>
- a=green-max: <green-max value>
- a=blue-max: <blue-max value>
- a=red-shift: <red-shift value>
- a=green-shift: <green-shift value>
- =blue-shift: <blue-shift value>

[0067] For the sake of interoperability, the client and server behavior regarding the understanding of those previous attributes is same as specified in RFB specification 3.8 except that the Handshaking messages and initialization messages are replaced by SDP offer/answer messages.

[0068] TC semantic.

[0069] A viewer application that receives a session description that contains "m" lines that are grouped together using the TC semantics MUST display and associate a remote desktop control protocol (e.g. RFB) with corresponding media streams like RTP audio/video streams.

a=group:TC

[0070] Then the media-level attribute "a=mid:" must be used in each media line that belongs to a group.

[0071] For appropriate rendering of the remote display, the media line(s) corresponding to RTP streams (e.g. for video transfer) indicate further display location that is relative to the remote display frame buffer coordinates and size. With this information the thin client device is aware of the location of where should be rendered the RTP video stream on the remote desktop framebuffer. The client can therefore adapt the framebuffer update strategy. Particularier in the case of RFB where framebuffer updates are client-driven, the polling intervals can be adjusted as well as which portion of the remote desktop display should be updated.

a=area-x: <x position value>
a=area-y: <y position value>
a=area-w: <width value>
a=area-h: <height value>
It may also indicate the win-id attribute
a=wind-id: <window identifier>

[0072] Such win-id must be unique within a user session for remote desktop control. Use of this id is further explained in the next section.

[0073] RFB protocol extensions for window specific management on the framebuffer

[0074] RFB graphical update strategy is a client-driven screen update. In RFB specification 3.8, the client can request the update of portion of the whole screen to save bandwidth.

[0075] By introduction of the combination of video traffic in addition to framebuffer updates, the client can receive and map a video onto a dedicated portion of the screen.

[0076] For instance on a limited screen device such as a mobile phone, the client may decide to resize the video buffer to fit the whole mobile device screen. In such a case the client stops refreshing the framebuffer used for the RFB framebuffer update messages. We will call this specific framebuffer "desktop framebuffer" (desktop FB).

[0077] In another foreseen use case, the client receives the graphical update of a media player opened in a dedicated window. Then the client may freely move the video on top of the remote desktop framebuffer locally on its device, and the player may be shown or hidden upon user request. The problem in this situation is that the window movement might need to be indicated to the server for appropriate rendering and screen display management, more particularly if the desktop is shared among multiple users. For instance a first user may control the desktop while other participants may only see the resulting actions of said first user.

[0078] In practice the RTP video stream will be received and handled on a separate framebuffer. By introducing the ability to associate a video media to remote desktop capabilities, and by adding the win-id information, the client is able to freely handle the video media rendering on its screen (performing a rotation, switch to fullscreen mode, etc...) while still being associated to the same user session. The Win-id does not necessarily refer to a window but can also refer to a graphical area though in practice it might be easier to implement it using a window, more particularly if said window is likely to be resized or moved. Two new client requests are then defined:

The FramebufferForgetRequest (message-type, window-id, x-position, y-position, width, height) that tells the server that a specific area on the framebuffer does not require update. This is likely to happen if this area is refreshed by another media stream (e.g. H263 encoded video transported over RTP).
The WindowUpdate (message-type, window-id, x-position, y-position, width, height) that tells the serv-

er that a received media stream corresponding to a window (or graphical area) opened on the server has been resized, moved, or both.
Those client requests must not be used if no window-id exists, i.e. if no independent media stream corresponding to a window is received.

[0079] This also require the server to send the attribute "a=win-id" to indicate whether the media stream received matches a window on the server. If not, the win-id attribute is set to zero and if the attribute is not present the client must not correlate the media stream to a window.

[0080] When the media stream does not relate to any windows on the remote server, the client must not resize or move the media on the framebuffer so the WindowUpdate must not be used. However, in a poll model (or client driven framebuffer update) the client may use the FramebufferForgetRequest message in order to inform the server not to update the area specified in the request. However, in a push model, this may not be required as the server should already know that this area is updated using another protocol and encoding.

[0081] When the media stream relates to a window on the remote server, the above client requests (FramebufferForgetRequest and WindowUpdate) are used to update the position of the window on the remote server. The window-id information in the FramebufferForgetRequest enables the client to modify the area indication for which the server will not send any framebuffer updates.

[0082] Figure 2 illustrates a thin client viewer rendering a remote application display (remote desktop) consisting of several areas that can be dynamically adapted. The Area A is the background of the remote desktop that is graphically updated based on RFB protocol. The other areas are dependant upon the area A such as the area B is illustrated.

[0083] The area B is the area of the screen located at (x,y) position relative to area A (X, Y Base coordinates). It is also characterized by it width (w) and height (h) dimensions. The graphical output is streamed over Real Time Protocol (RTP) and encoded for instance using H263 codec.

[0084] Any user interaction on the area B can therefore be associated to the remote desktop (background) and pointer events from Area B can be sent to the remote server as if they were performed on Area

A. This can be used when the area B is locally resized or moved on the thin client device' screen without necessarily triggering window resizing and movement at the server.

[0085] Figure 3 illustrates a thin client connection establishment between a UE 2 acting as thin client device and a remote desktop PC acting as a thin client server 4.

[0086] The UE 2 connects through an IP access network for communicating with the remote desktop PC 4 and initiates a SDP Offer/Answer containing thin client parameters including Graphics encoding scheme, the transport settings (RFB (remote framebuffer), RDP (Remote Desktop Protocol), ICA (Independent Computing Architecture protocol), or pixels/RTP (Real-time Transport Protocol), IP Addresses and port number and radio bearer settings (Packet switched or Circuit Switched connection).

[0087] At step 20, the UE 2 transmits to the Desktop 4 the SDP offer comprising Thin client session attributes and further parameters required for the appropriate SIP session establishment.

[0088] Upon reception of said SDP offer, the Desktop 4 determines that the UE 2 wishes to establish a thin client connection using RFB protocol, determines that RFB protocol and proposed attributes are acceptable based on the environment where the UE 2 is located and, at step 22, sends back a SDP Answer Message indicating the RFB and attributes are selected.

[0089] The UE 2 and the Desktop 4 agree the direction for the transfer of graphical updates and events. In addition, they identify that the thin client connection pertains to the ongoing session between them.

[0090] After the thin client connection parameters are agreed on both side, the Desktop 4 sends to the UE 2, at step 24, the graphical updates message while said UE 2 sends, at step 26, uplink keys and pointer events to the Desktop 4.

[0091] The Desktop 4 may refuse a connection and can thereby set the port number corresponding to the Graphic or Event Stream to zero, as specified in IETF RFC3264.

[0092] If some thin client parameters are unknown from the Desktop 4, the later silently ignores such parameters, as specified in IETF RFC4566.

[0093] At step 28, the UE 2 and the Desktop 4 exchange RFB media and events.

[0094] At step 30, the user opens a media player to view a video and the Desktop 4 sends a second SDP Offer that the UE 2 may or may not accept. Actually the Desktop 4 wishes to send the video, for example, over RTP and a renegotiation is triggered with the new SDP Offer including the video parameters information. Since the video output is generated by the desktop media player application, the thin client session identifier and the graphical position information is given so that the UE 2 can display the video stream at the right position. Therefore the video stream is combined to the ongoing thin client session.

[0095] At step 32, The UE 2 acknowledges the Offer and sends back an Answer. The desktop 4 adapts the display updates so that the area where the video is streamed is not updated via the thin client protocol.

[0096] Figure 4 illustrates an use of the method according to the invention in application display redirection.

[0097] This situation may occur, for example, when a user decides to redirect a video that he receives on mobile UE 2 to a TV 40 SIP-connected at a server, for in-

stance at the set-top-box or any other back-end SIP server, and reachable via its public address.

[0098] In this case, at step 42, the UE 2 connects to the remote desktop 4 through an IP access network for communicating with the remote desktop PC 4. This also relates to steps 20 22, 24, 26, and 28 in figure 3.

[0099] The UE 2 interacts with the desktop by sending key and mouse events. At one moment in time the user opens a media player and decides to play the video.

[0100] At step 44 the desktop 4 sends a SDP Offer/Answer to enable streaming the video. This decision is based on a local policy and intelligence as well as on local server interface implementation. In a first embodiment this implies applications hosted on the server to request specific media transfer means to a thin client server module (we call this application aware media transfer adaptation). In a second embodiment this implies the thin client server module to autonomously select the most appropriate transfer means.

[0101] Upon reception of this request, the UE 2 sends back, at step 46, an answer to accept or refuse this video stream. In this typical example, the UE 2 supports the redirection feature. The user selects the redirection option and chooses to redirect the video to the TV 40 via the UE 2 User Interface. It is assumed that the mobile phone knows her TV SIP public address or IP address. This means that the thin client device provides a user interface for notifying the user whether to accept the media flow or direct it to another equipment. The Answer message contains the address of the TV and the ID of the application for which the redirection is requested to redirect e.g. the web browser display.

[0102] In this case the redirection refers to the display redirection of an application (this can be a web browser, an instant messaging application, a video,).

[0103] The Desktop 4 receives the message, interprets the message and prepares to redirect the media to the TV 40. No screen updates corresponding to the area where the video output is located is sent to the UE 2. This requires the Answer message to include an indication as to whether the output stream still is streamed to the mobile device or not.

[0104] The media negotiation follows with the TV 40 through SIP if SIP is supported. It may be possible that the desktop 4 negotiates the video transfer via other means.

[0105] At step 48, the desktop 4 sends the SDP offer to the TV 40.

[0106] At step 50 the SDP Offer is accepted by the TV which sends back a SDP Answer.

[0107] At step 52, the UE 2 is notified that the TV 40 accepted the redirection.

[0108] Finally, at step 54, the video is displayed on the TV screen 40. The user may continue interacting with the remote desktop 4 using remote desktop control means.

[0109] In the above example the TV 40 is preferably SIP-connected at a server, for instance at the set-top-box or any other back-end SIP server, and that it is reachable via its public address.

Claims

1. Method for establishing a Thin Client session between a Thin Client device (2) and a Thin Client Server (4) exchanging Handshaking and initialization messages during a session negotiation above a SIP-based framework, **characterized in that** said Thin Client device (2) and said Thin Client Server (4) exchange additional information representative of the Thin Client context enabling the combination and adaptive transfer of multiple media streams in at least one remote application display during said thin client session.

2. Method according to claim 1 wherein said additional information consists of Thin Client information formatted in SDP (Session Description Protocol) offer/answer messages.

3. Method according to claim 1 wherein said additional information consists of Thin Client information formatted in XML-based offer/answer messages embedded in the body of SIP messages.

4. Method according to claim 2 or claim 3 wherein said additional information comprises both multimedia transfers and remote desktop control capabilities.

5. Method according to claim 4 wherein said remote desktop control capabilities further comprises dynamically directing or redirecting graphical updates of a remote application from a first device onto a second device.

6. Method according to claim 5 wherein said first device is a mobile communication device and said second device is a fixed communication device.

7. Method according to claim 6 comprising, transferring uplink events on a separate radio bearer than the one used for the downlink graphical updates.

8. Method according to claim 7 comprising transferring uplink events on a separate IP connection that the one used for the downlink graphical updates.

9. Method according to claim 1 comprising, associating at least one audio/video stream to the thin client session.

10. Method according to claim 8 wherein said additional information comprises remote display framebuffer coordinates and size corresponding to said audio/video streams associated to said thin client session.

11. Method according to claim 9 wherein said additional information allows sending a client request (FramebufferForgetRequest) instructing the server that a specific area on the framebuffer does not require update.

12. Method according to claim 11 wherein said additional information comprises window-id attribute.

13. Method according to claim 12 wherein said additional information allow sending a client request (WindowUpdate) instructing a server that a graphical area identified by said window-id attribute has been resized, moved or both.

14. A thin client device (2) adapted for implementing the method according to claim 1 for establishing a Thin Client session with a Thin Client Server (4), **characterized by** means for exchanging with said Thin Client Server (4) additional information representative of the Thin Client context enabling the combination and adaptive transfer of multiple media streams in at least one remote application display during said thin client session, said additional information consisting of SDP (Session Description Protocol) offer/answer messages Or XML-based offer/answer messages embedded in the body of SIP messages.

15. A thin client device (2) according to claim 14 consisting of a Mobile User Equipment comprising an interface to enable a user to register interest in media redirection in order to get notified upon reception of said media redirection, and to send a redirection answer.

16. A thin client device (2) according to claim 14 adapted for establishing a separate IP connection for uplink events, for triggering the allocation of separate radio bearer for transferring said uplink events on a separate radio bearer than the one used for downlink graphical updates, and for mapping the rendering of audio/video stream(s) to said remote display framebuffer on its screen.

17. A Thin Client Server (4) adapted for implementing the method according to claim 1 for establishing a Thin Client session with a Thin Client device (2), **characterized by** means for exchanging with said Thin Client device additional information representative of the Thin Client context enabling the combination and adaptive transfer of multiple media streams in at least one remote application display during said thin client session.

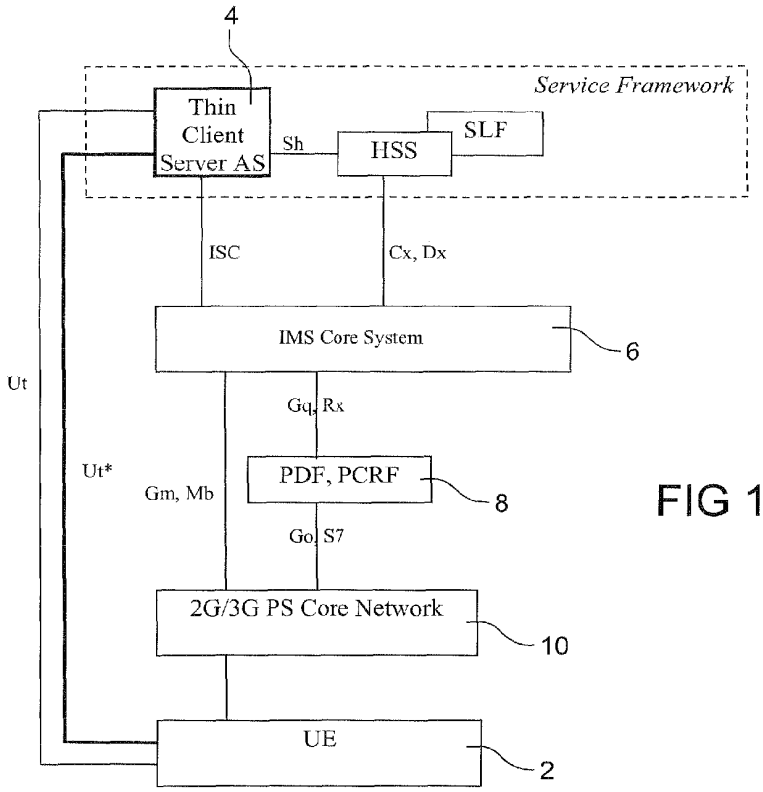
4
Service Framework
Thin Client Server AS
Sh
HSS
SLF
ISC
Cx, Dx
IMS Core System
6
Ut
Gq, Rx
Ut*
Gm, Mb
PDF, PCRF
8
Go, S7
2G/3G PS Core Network
10
UE
2

FIG 1

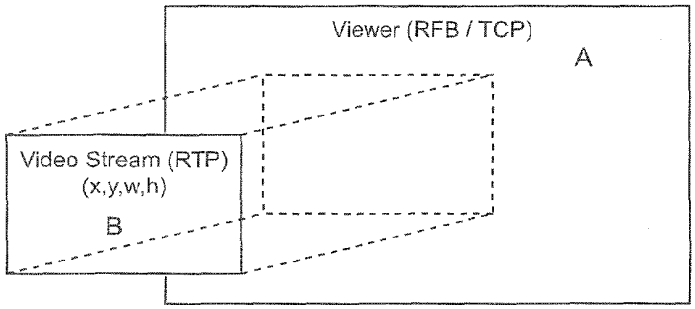
Viewer (RFB / TCP)
A
Video Stream (RTP)
(x,y,w,h)
B

Fig 2

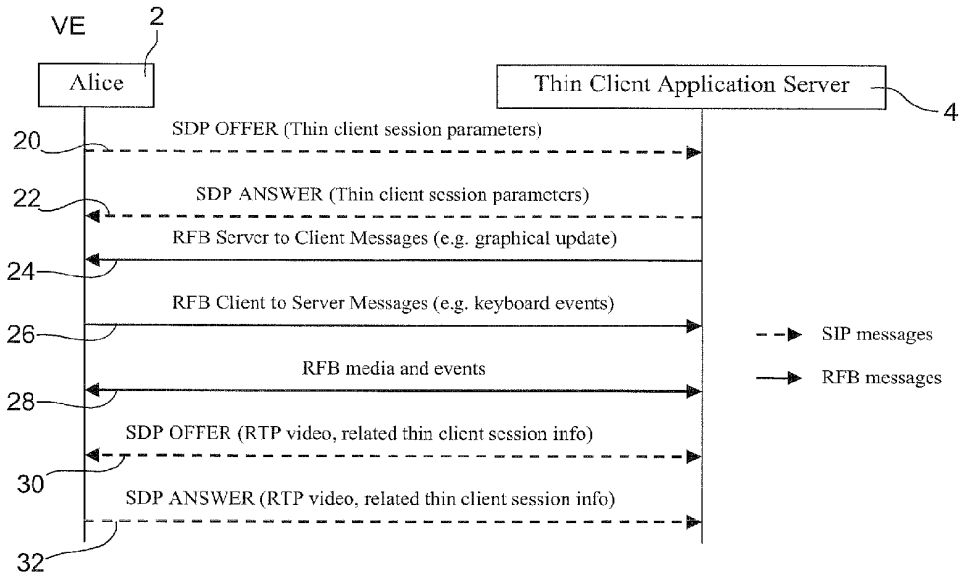
VE
2
Alice
Thin Client Application Server
4
20
SDP OFFER (Thin client session parameters)
22
SDP ANSWER (Thin client session parameters)
RFB Server to Client Messages (e.g. graphical update)
24
RFB Client to Server Messages (e.g. keyboard events)
26
RFB media and events
28
SDP OFFER (RTP video, related thin client session info)
30
SDP ANSWER (RTP video, related thin client session info)
32
SIP messages
RFB messages

Fig 3

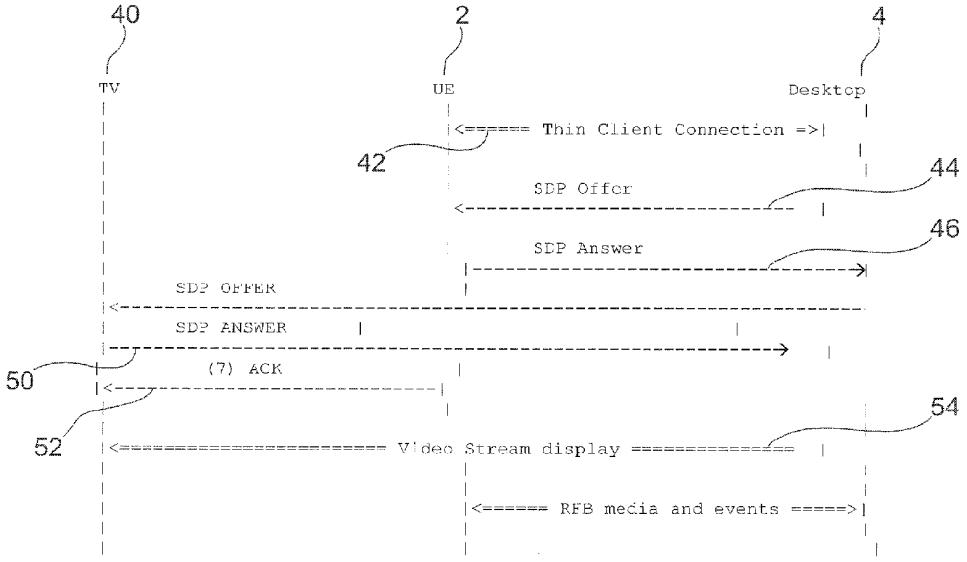
40
2
4
TV
UE
Desktop
<====== Thin Client Connection =>|
42
44
SDP Offer
46
SDP Answer
SDP OFFER
SDP ANSWER
50
(7) ACK
52
54
<========== Video Stream display ==========
<====== RFB media and events =====>

FIG 4

Europäisches Patentamt
European Patent Office
Office européen des brevets

EUROPEAN SEARCH REPORT

Application Number
EP 08 16 6122

DOCUMENTS CONSIDERED TO BE RELEVANT

Category	Citation of document with indication, where appropriate, of relevant passages	Relevant to claim	CLASSIFICATION OF THE APPLICATION (IPC)
X	LENNOX H SCHULZRINNE J NIEH R BARRATO COLUMBIA U J: "Protocols for Application and Desktop Sharing; draft-lennox-avt-app-sharing-00.txt" IETF STANDARD-WORKING-DRAFT, INTERNET ENGINEERING TASK FORCE, IETF, CH, 1 December 2004 (2004-12-01), pages 1-22, XP015039313 ISSN: 0000-0004 * page 3 - page 9 * * page 16 - page 18 * -----	1-17	INV. H04L29/06
X,D	GARCIA-MARTIN NOKIA SIEMENS NETWORKS J OTT HELSINKI UNIVERSITY OF TECHNOLOGY M: "Session Description Protocol (SDP) Extensions and Conventions for Collaboration Applications; draft-garcia-mmusic-sdp-collaboration-00.txt" IETF STANDARD-WORKING-DRAFT, INTERNET ENGINEERING TASK FORCE, IETF, CH, 18 February 2008 (2008-02-18), pages 1-22, XP015052905 ISSN: 0000-0004 * page 3 - page 14 * -----	1-9,14, 15,17	TECHNICAL FIELDS SEARCHED (IPC) H04L
X	US 2007/058637 A1 (LO TUN HAN FELIX [CN]) 15 March 2007 (2007-03-15) * figures 16,17,19 * * paragraph [0076] - paragraph [0086] * -----	1-6,14, 15,17	

-/--

The present search report has been drawn up for all claims

Place of search	Date of completion of the search	Examiner
Munich	24 March 2009	Jurca, Alexandru

CATEGORY OF CITED DOCUMENTS

X : particularly relevant if taken alone
Y : particularly relevant if combined with another document of the same category
A : technological background
O : non-written disclosure
P : intermediate document

T : theory or principle underlying the invention
E : earlier patent document, but published on, or after the filing date
D : document cited in the application
L : document cited for other reasons

& : member of the same patent family, corresponding document

EPO FORM 1503 03.82 (P04C01)

Europäisches Patentamt
European Patent Office
Office européen des brevets

EUROPEAN SEARCH REPORT

Application Number
EP 08 16 6122

DOCUMENTS CONSIDERED TO BE RELEVANT

Category	Citation of document with indication, where appropriate, of relevant passages	Relevant to claim	CLASSIFICATION OF THE APPLICATION (IPC)
X	OTT TZI J: "SDP Attributes for T.120 Data Conferencing; draft-ott-mmusic-sdp-t120 00.txt" IETF STANDARD-WORKING-DRAFT, INTERNET ENGINEERING TASK FORCE, IETF, CH, 12 July 2004 (2004-07-12), pages 1-7, XP015033580 ISSN: 0000-0004 * page 2 - page 5 * -----	1-6,14, 15,17	
X	BARTON J J ET AL: "Dialing for Displays: Session Initiation Protocol for Opportunistic Augmentation" PERVASIVE COMPUTING AND COMMUNICATIONS, 2006. PERCOM 2006. FOURTH ANNU AL IEEE INTERNATIONAL CONFERENCE ON PISA, ITALY 13-17 MARCH 2006, PISCATAWAY, NJ, USA,IEEE, 13 March 2006 (2006-03-13), pages 1-6, XP010910642 ISBN: 978-0-7695-2518-1 * page 1 - page 4 * -----	1-6,14, 15,17	
			TECHNICAL FIELDS SEARCHED (IPC)

The present search report has been drawn up for all claims

Place of search	Date of completion of the search	Examiner
Munich	24 March 2009	Jurca, Alexandru

CATEGORY OF CITED DOCUMENTS

X : particularly relevant if taken alone
Y : particularly relevant if combined with another document of the same category
A : technological background
O : non-written disclosure
P : intermediate document

T : theory or principle underlying the invention
E : earlier patent document, but published on, or after the filing date
D : document cited in the application
L : document cited for other reasons

& : member of the same patent family, corresponding document

1

EPO FORM 1503 03.82 (P04C01)

ANNEX TO THE EUROPEAN SEARCH REPORT ON EUROPEAN PATENT APPLICATION NO. EP 08 16 6122

This annex lists the patent family members relating to the patent documents cited in the above-mentioned European search report.
The members are as contained in the European Patent Office EDP file on
The European Patent Office is in no way liable for these particulars which are merely given for the purpose of information.

24-03-2009

Patent document cited in search report	Publication date	Patent family member(s)	Publication date
US 2007058637 A1	15-03-2007	WO 2007031021 A1	22-03-2007
		CN 101107830 A	16-01-2008

EPO FORM P0459

For more details about this annex : see Official Journal of the European Patent Office, No. 12/82

Espacenet

Bibliographic data: JP2004356695 (A) - 2004-12-16

SYSTEM AND METHOD FOR DATA DISTRIBUTION AND DATA RECEIVING APPARATUS AND METHOD FOR DATA RECEIVING

Inventor(s): KASAHARA YOICHI + (KASAHARA YOICHI)

Applicant(s): SONY CORP + (SONY CORP)

Classification: **- international:** ***G06F13/00; H04N21/433; H04N21/442; H04N7/173;*** (IPC1-7): H04N7/173
- cooperative:

Application number: JP20030148697 20030527

Priority number (s): JP20030148697 20030527

Abstract of JP2004356695 (A)

PROBLEM TO BE SOLVED: To reproduce streaming data without generating underflow and overflow even in a small buffer, and to shorten a time for providing content at the time of operating a remote controller. ;SOLUTION: When a user controls a remote controller 39 for a content providing device 21, an IR code processor 37 receives a signal of the remote controller 39, and changes an overflow threshold from a normal threshold to an operation threshold smaller than the normal threshold. When judging that the amount of data streaming in a buffer 51 exceeds the operation threshold, a reproduction speed control unit 52 controls a decoder 53 and a reproduction control unit 54 to speed the reproduction processing. ;COPYRIGHT: (C) 2005,JPO&NCIPI

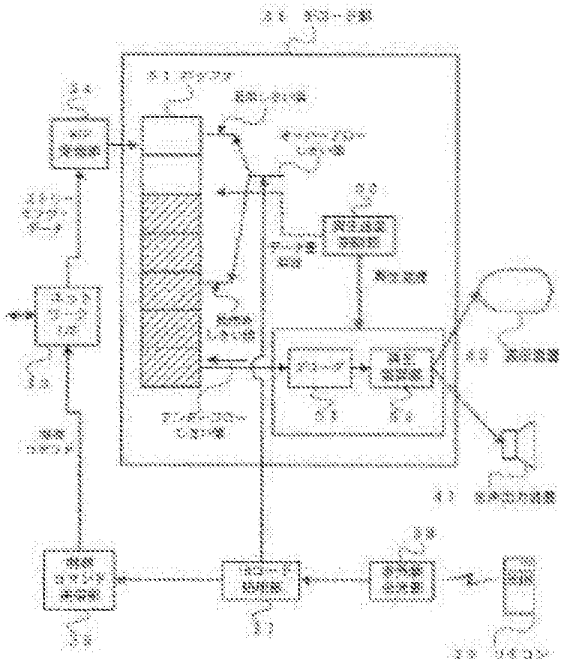

(19)日本国特許庁(JP)　(12)公開特許公報(A)　(11)特許出願公開番号
特開2004-356695
(P2004-356695A)
(43)公開日　平成16年12月16日(2004.12.16)

(51)Int.Cl.⁷	F I			テーマコード（参考）
H04N 7/173	H04N	7/173	610Z	5C064
	H04N	7/173	630	

審査請求 未請求　請求項の数 28　ＯＬ　（全 23 頁）

(21)出願番号　特願2003-148697(P2003-148697)
(22)出願日　平成15年5月27日(2003.5.27)

(71)出願人　000002185
ソニー株式会社
東京都品川区北品川６丁目７番３５号
(74)代理人　100082762
弁理士　杉浦　正知
(74)代理人　100120640
弁理士　森　幸一
(72)発明者　笠原　洋一
東京都品川区北品川６丁目７番３５号　ソニー株式会社内

Ｆターム(参考)　5C064 BA01 BB05 BC16 BC23 BD02 BD08 BD09

(54)【発明の名称】データ配信システムおよびデータ配信方法、ならびにデータ受信装置およびデータ受信方法

(57)【要約】
【課題】小さなバッファでもアンダーフロー、およびオーバーフローを発生させずにストリーミング・データを再生するとともに、リモコン操作時のコンテンツ提供に係る遅延時間を短縮する。
【解決手段】ユーザが、コンテンツ提供装置２１に対してリモコン３９の操作をした場合に、ＩＲコード処理部３７が上記リモコン３９の信号を受信し、オーバーフローしきい値を通常しきい値から、通常しきい値より小さい操作時しきい値に変更する。再生速度制御部５２は、バッファ５１内のストリーミング・データの量が、上記操作時しきい値を越えたと判断した場合に、デコーダ５３および再生制御部５４に対して再生処理を速くするよう制御し、これによって、リモコン操作時に、コンテンツがコンテンツ提供装置２１から提供されてから表示装置４０等に出力されるまでの時間を短縮する。
【選択図】　図５

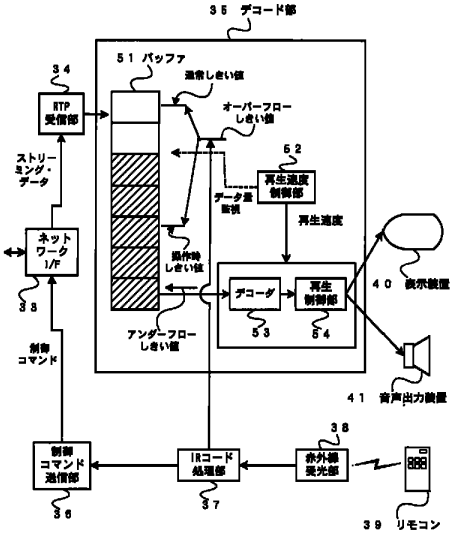

【特許請求の範囲】
【請求項１】
映像データを含むコンテンツを出力するコンテンツ提供装置と、
前記コンテンツを必要に応じてエンコードし、ストリーミング・データとしてネットワーク上に送信する送信装置と、
前記ストリーミング・データを、前記ネットワークを介して受信する受信装置とを有し、
前記受信装置は、前記受信されたストリーミング・データをデコード処理がされるまで記憶するバッファ手段と、
前記バッファ手段内の前記ストリーミング・データに前記デコード処理を施すとともに、デコード出力の再生速度を制御可能なデコード手段と、
前記バッファ手段内に記憶されているストリーミング・データのデータ量を所定のタイミングで取得し、前記データ量が第１のしきい値以下である場合は、前記デコード手段が通常の速度で前記ストリーミング・データの再生を行うよう制御し、
前記データ量が第１のしきい値を上回った場合は、前記デコード手段が前記通常の速度より速い速度で前記ストリーミング・データの再生を行うよう制御する再生速度制御手段とを備えることを特徴とするデータ配信システム。
【請求項２】
映像データを含むコンテンツを出力するコンテンツ提供装置と、
前記コンテンツを必要に応じてエンコードし、ストリーミング・データとしてネットワーク上に送信する送信装置と、
前記ストリーミング・データを、前記ネットワークを介して受信する受信装置とを有し、
前記受信装置は、前記受信されたストリーミング・データをデコード処理がされるまで記憶するバッファ手段と、
前記バッファ手段内の前記ストリーミング・データに前記デコード処理を施すとともに、デコード出力の再生速度を制御可能なデコード手段と、
前記バッファ手段内に記憶されているストリーミング・データのデータ量を所定のタイミングで取得し、前記データ量が第２のしきい値以上である場合は、前記デコード手段が通常の速度で前記ストリーミング・データの再生を行うよう制御し、
前記データ量が前記第２のしきい値を下回った場合は、前記デコード手段が前記通常の速度より低い速度で前記ストリーミング・データの再生を行うよう制御する再生速度制御手段とを備えることを特徴とするデータ配信システム。
【請求項３】
映像データを含むコンテンツを出力するコンテンツ提供装置と、
前記コンテンツを必要に応じてエンコードし、ストリーミング・データとしてネットワーク上に送信する送信装置と、
前記ストリーミング・データを、前記ネットワークを介して受信する受信装置とを有し、
前記受信装置は、前記受信されたストリーミング・データをデコード処理がされるまで記憶するバッファ手段と、
前記バッファ手段内の前記ストリーミング・データに前記デコード処理を施すとともに、デコード出力の再生速度を制御可能なデコード手段と、
前記バッファ手段内に記憶されているストリーミング・データのデータ量を所定のタイミングで取得し、前記データ量が第１のしきい値と前記第１のしきい値より小さい第２のしきい値の間である場合は、前記デコード手段が通常の速度で前記ストリーミング・データの再生を行うよう制御し、
前記データ量が第１のしきい値を上回った場合は、前記デコード手段が前記通常の速度より速い速度で前記ストリーミング・データの再生を行うよう制御し、前記データ量が第２のしきい値を下回った場合は、前記デコード手段が前記通常の速度より低い速度で前記ストリーミング・データの再生を行うよう制御する再生速度制御手段とを備えることを特徴とするデータ配信システム。
【請求項４】

請求項１，２または３に記載のデータ配信システムにおいて、
前記受信装置は、前記コンテンツ提供装置を制御するための制御信号を出力する信号入力装置からの前記制御信号を受信する信号処理手段を更に有し、
前記制御信号が、前記信号処理手段から、前記ネットワークおよび前記送信装置を介して前記コンテンツ提供装置に送信され、
前記信号処理手段が、前記制御信号を受信した場合に、前記第１のしきい値を、前記第１のしきい値より小さい所定の値に変更することを特徴とするデータ配信システム。
【請求項５】
請求項４に記載のデータ配信システムにおいて、
前記信号処理手段は、前記制御信号を一定期間受信しない場合は、前記変更された第１のしきい値を、元の第１のしきい値に戻すことを特徴とするデータ配信システム。
【請求項６】
請求項１，２または３に記載のデータ配信システムにおいて、
前記デコード手段によりデコードされたストリーミング・データを受信し、前記映像データを表示する表示装置を更に有することを特徴とするデータ配信システム。
【請求項７】
請求項１，２または３に記載のデータ配信システムにおいて、
前記デコード手段は、前記再生速度制御手段から再生処理の速度を変更するよう制御された場合に、前記映像データから所定のフィールドまたはフレームを除去することにより、または前記映像データに所定のフィールドまたはフレームを挿入することによって再生速度を変更することを特徴とするデータ配信システム。
【請求項８】
映像データを含むコンテンツを出力するコンテンツ提供ステップと、
前記コンテンツを必要に応じてエンコードし、ストリーミング・データとしてネットワーク上に送信する送信ステップと、
前記ストリーミング・データを前記ネットワークを介して受信し、前記ストリーミング・データをデコード処理がされるまでバッファ手段に記憶する記憶ステップと、
前記バッファ手段内の前記ストリーミング・データに前記デコード処理を施すとともに、デコード出力の再生速度を制御可能なデコードステップと、
前記バッファ手段内に記憶されているストリーミング・データのデータ量を所定のタイミングで取得し、前記データ量が第１のしきい値以下である場合は、前記デコードステップが通常の速度で前記ストリーミング・データの再生を行うよう制御し、
前記データ量が第１のしきい値を上回った場合は、前記デコードステップが前記通常の速度より速い速度で前記ストリーミング・データの再生を行うよう制御する再生速度制御ステップとを有することを特徴とするデータ配信方法。
【請求項９】
映像データを含むコンテンツを出力するコンテンツ提供ステップと、
前記コンテンツを必要に応じてエンコードし、ストリーミング・データとしてネットワーク上に送信する送信ステップと、
前記ストリーミング・データを前記ネットワークを介して受信し、前記ストリーミング・データをデコード処理がされるまでバッファ手段に記憶する記憶ステップと、
前記バッファ手段内の前記ストリーミング・データに前記デコード処理を施すとともに、デコード出力の再生速度を制御可能なデコードステップと、
前記バッファ手段内に記憶されているストリーミング・データのデータ量を所定のタイミングで取得し、前記データ量が第２のしきい値以上である場合は、前記デコードステップが通常の速度で前記ストリーミング・データの再生を行うよう制御し、
前記データ量が前記第２のしきい値を下回った場合は、前記デコードステップが前記通常の速度より低い速度で前記ストリーミング・データの再生を行うよう制御する再生速度制御ステップとを有することを特徴とするデータ配信方法。
【請求項１０】

映像データを含むコンテンツを出力するコンテンツ提供ステップと、
前記コンテンツを必要に応じてエンコードし、ストリーミング・データとしてネットワーク上に送信する送信ステップと、
前記ストリーミング・データを前記ネットワークを介して受信し、前記ストリーミング・データをデコード処理がされるまでバッファ手段に記憶する記憶ステップと、
前記バッファ手段内の前記ストリーミング・データに前記デコード処理を施すとともに、デコード出力の再生速度を制御可能なデコードステップと、
前記バッファ手段内に記憶されているストリーミング・データのデータ量を所定のタイミングで取得し、前記データ量が第１のしきい値と前記第１のしきい値より小さい第２のしきい値の間である場合は、前記デコードステップが通常の速度で前記ストリーミング・データの再生を行うよう制御し、
前記データ量が第１のしきい値を上回った場合は、前記デコードステップが前記通常の速度より速い速度で前記ストリーミング・データの再生を行うよう制御し、
前記データ量が前記第２のしきい値を下回った場合は、前記デコードステップが前記通常の速度より低い速度で前記ストリーミング・データの再生を行うよう制御する再生速度制御ステップとを有することを特徴とするデータ配信方法。
【請求項１１】
請求項８，９または１０に記載のデータ配信方法において、
前記映像データを含むコンテンツからなるストリーミング・データの提供を制御するための制御信号を受信する信号処理ステップを更に有し、
前記信号処理ステップが、前記制御信号を受信した場合に、前記第１のしきい値を、前記第１のしきい値より小さい所定の値に変更することを特徴とするデータ配信方法。
【請求項１２】
請求項１１に記載のデータ配信方法において、
前記信号処理ステップは、前記制御信号を一定期間受信しない場合は、前記変更された第１のしきい値を、元の第１のしきい値に戻すことを特徴とするデータ配信方法。
【請求項１３】
請求項８，９または１０に記載のデータ配信方法において、
前記デコードステップによりデコードされたストリーミング・データを受信し、前記映像データを表示する表示ステップを更に有することを特徴とするデータ配信方法。
【請求項１４】
請求項８，９または１０に記載のデータ配信方法において、
前記デコードステップは、前記再生速度制御ステップにより再生処理の速度を変更するよう制御された場合に、前記映像データから所定のフィールドまたはフレームを除去することにより、または前記映像データに所定のフィールドまたはフレームを挿入することによって再生速度を変更することを特徴とするデータ配信方法。
【請求項１５】
映像データを含むコンテンツからなるストリーミング・データを受信し、前記ストリーミング・データを、デコード処理がされるまで記憶するバッファ手段と、
前記バッファ手段内の前記ストリーミング・データに前記デコード処理を施すとともに、デコード出力の再生速度を制御可能なデコード手段と、
前記バッファ手段内に記憶されているストリーミング・データのデータ量を所定のタイミングで取得し、前記データ量が第１のしきい値以下である場合は、前記デコード手段が通常の速度で前記ストリーミング・データの再生を行うよう制御し、
前記データ量が第１のしきい値を上回った場合は、前記デコード手段が前記通常の速度より速い速度で前記ストリーミング・データの再生を行うよう制御する再生速度制御手段とを有することを特徴とするデータ受信装置。
【請求項１６】
映像データを含むコンテンツからなるストリーミング・データを受信し、前記ストリーミング・データを、デコード処理がされるまで記憶するバッファ手段と、

前記バッファ手段内の前記ストリーミング・データに前記デコード処理を施すとともに、デコード出力の再生速度を制御可能なデコード手段と、
前記バッファ手段内に記憶されているストリーミング・データのデータ量を所定のタイミングで取得し、前記データ量が第２のしきい値以上である場合は、前記デコード手段が通常の速度で前記ストリーミング・データの再生を行うよう制御し、
前記データ量が第２のしきい値を下回った場合は、前記デコード手段が前記通常の速度より低い速度で前記ストリーミング・データの再生を行うよう制御する再生速度制御手段とを有することを特徴とするデータ受信装置。

【請求項１７】

映像データを含むコンテンツからなるストリーミング・データを受信し、前記ストリーミング・データを、デコード処理がされるまで記憶するバッファ手段と、
前記バッファ手段内の前記ストリーミング・データに前記デコード処理を施すとともに、デコード出力の再生速度を制御可能なデコード手段と、
前記バッファ手段内に記憶されているストリーミング・データのデータ量を所定のタイミングで取得し、前記データ量が第１のしきい値と前記第１のしきい値より小さい第２のしきい値の間である場合は、前記デコード手段が通常の速度で前記ストリーミング・データの再生を行うよう制御し、
前記データ量が第１のしきい値を上回った場合は、前記デコード手段が前記通常の速度より速い速度で前記ストリーミング・データの再生を行うよう制御し、
前記データ量が前記第２のしきい値を下回った場合は、前記デコード手段が前記通常の速度より低い速度で前記ストリーミング・データの再生を行うよう制御する再生速度制御手段とを有することを特徴とするデータ受信装置。

【請求項１８】

請求項１５，１６または１７に記載のデータ受信装置において、
前記映像データを含むコンテンツからなるストリーミング・データの提供を制御するための制御信号を受信する信号処理手段を更に有し、
前記信号処理手段が、前記制御信号を受信した場合に、前記第１のしきい値を、前記第１のしきい値より小さい所定の値に変更することを特徴とするデータ受信装置。

【請求項１９】

請求項１８に記載のデータ受信装置において、
前記信号処理手段は、前記制御信号を一定期間受信しない場合は、前記変更された第１のしきい値を、元の第１のしきい値に戻すことを特徴とするデータ受信装置。

【請求項２０】

請求項１５，１６または１７に記載のデータ受信装置において、
前記デコード手段によりデコードされた前記ストリーミング・データを受信し、前記映像データを表示する表示手段を更に有することを特徴とするデータ受信装置。

【請求項２１】

請求項１５，１６または１７に記載のデータ受信装置において、
前記デコード手段は、前記再生速度制御手段から再生処理の速度を変更するよう制御された場合に、前記映像データから所定のフィールドまたはフレームを除去することにより、または前記映像データに所定のフィールドまたはフレームを挿入することによって再生速度を変更することを特徴とするデータ受信装置。

【請求項２２】

映像データを含むコンテンツからなるストリーミング・データを受信し、前記ストリーミング・データを、デコード処理がされるまでバッファ手段に記憶する記憶ステップと、
前記バッファ手段内の前記ストリーミング・データに前記デコード処理を施すとともに、デコード出力の再生速度を制御可能なデコードステップと、
前記バッファ手段内に記憶されているストリーミング・データのデータ量を所定のタイミングで取得し、前記データ量が第１のしきい値以下である場合は、前記デコードステップが通常の速度で前記ストリーミング・データの再生を行うよう制御し、

前記データ量が第１のしきい値を上回った場合は、前記デコードステップが前記通常の速度より速い速度で前記ストリーミング・データの再生を行うよう制御する再生速度制御ステップとを有することを特徴とするデータ受信方法。

【請求項２３】

映像データを含むコンテンツからなるストリーミング・データを受信し、前記ストリーミング・データを、デコード処理がされるまでバッファ手段に記憶する記憶ステップと、

前記バッファ手段内の前記ストリーミング・データに前記デコード処理を施すとともに、デコード出力の再生速度を制御可能なデコードステップと、

前記バッファ手段内に記憶されているストリーミング・データのデータ量を所定のタイミングで取得し、前記データ量が第２のしきい値以上である場合は、前記デコードステップが通常の速度で前記ストリーミング・データの再生を行うよう制御し、

前記データ量が前記第２のしきい値を下回った場合は、前記デコードステップが前記通常の速度より低い速度で前記ストリーミング・データの再生を行うよう制御する再生速度制御ステップとを有することを特徴とするデータ受信方法。

【請求項２４】

映像データを含むコンテンツからなるストリーミング・データを受信し、前記ストリーミング・データを、デコード処理がされるまでバッファ手段に記憶する記憶ステップと、

前記バッファ手段内の前記ストリーミング・データに前記デコード処理を施すとともに、デコード出力の再生速度を制御可能なデコードステップと、

前記バッファ手段内に記憶されているストリーミング・データのデータ量を所定のタイミングで取得し、前記データ量が第１のしきい値と前記第１のしきい値より小さい第２のしきい値の間である場合は、前記デコードステップが通常の速度で前記ストリーミング・データの再生を行うよう制御し、

前記データ量が第１のしきい値を上回った場合は、前記デコードステップが前記通常の速度より速い速度で前記ストリーミング・データの再生を行うよう制御し、

前記データ量が前記第２のしきい値を下回った場合は、前記デコードステップが前記通常の速度より低い速度で前記ストリーミング・データの再生を行うよう制御する再生速度制御ステップとを有することを特徴とするデータ受信方法。

【請求項２５】

請求項２２，２３または２４に記載のデータ受信方法において、

前記映像データを含むコンテンツからなるストリーミング・データの提供を制御するための制御信号を受信する信号処理ステップを更に有し、

前記信号処理ステップが、前記制御信号を受信した場合に、前記第１のしきい値を、前記第１のしきい値より小さい所定の値に変更することを特徴とするデータ受信方法。

【請求項２６】

請求項２５に記載のデータ受信方法において、

前記信号処理ステップは、前記制御信号を一定期間受信しない場合は、前記変更された第１のしきい値を、元の第１のしきい値に戻すことを特徴とするデータ受信方法。

【請求項２７】

請求項２２，２３または２４に記載のデータ受信方法において、

前記デコードステップによりデコードされた前記ストリーミング・データを受信し、前記映像データを表示する表示ステップを更に有することを特徴とするデータ受信方法。

【請求項２８】

請求項２２，２３または２４に記載のデータ受信方法において、

前記デコードステップは、前記再生速度制御ステップにより再生処理の速度を変更するよう制御された場合に、前記映像データから所定のフィールドまたはフレームを除去することにより、または前記映像データに所定のフィールドまたはフレームを挿入することによって再生速度を変更することを特徴とするデータ受信方法。

【発明の詳細な説明】

【０００１】

【発明の属する技術分野】
この発明は、映像・音声データを、ネットワークを介して配信するデータ配信システムおよび方法、ならびに映像・音声データを、ネットワークを介して受信するデータ受信装置およびデータ受信方法に関する。
【０００２】
【従来の技術】
ここ数年の間で、ＤＶＤ（Ｄｉｇｉｔａｌ　Ｖｅｒｓａｔｉｌｅ　Ｄｉｓｋ）の利用が広く浸透してきており、映画や音楽のコンテンツを記録したＤＶＤも多く販売されるようになってきた。またディジタルハイビジョン放送も開始され、各家庭には、今までにない高画質、高音質なコンテンツが多く提供されるようになってきている。これらのメディアの普及に伴って、ＤＶＤを再生するＤＶＤ再生装置、ディジタルハイビジョン放送を受信、表示するディジタルテレビジョン受信装置、およびディジタルハイビジョン放送等を録画して随時再生することができるホームビデオサーバといったコンテンツを提供する装置が次々と商品化され店頭に並んでいる。
【０００３】
また、これらの装置は、ユーザのリモコン等の操作に応じて所定の動作をする。例えば、ＤＶＤ再生装置は、映画のＤＶＤの再生に際して、ユーザのリモコン操作に応じて特定のチャプターを選択して再生することができる。また、ディジタルテレビジョン受信装置は、ユーザのリモコン操作に応じて、データ放送のプログラムによる双方向サービスを提供することができる。
【０００４】
このような状況の中、高画質かつ高音質な映画やテレビジョン放送の番組を、より容易に家庭内で楽しむことができる「ホームネットワーク」が世間の注目を集め、これを実現するシステムも市販され始めている。このシステムの特徴の１つは、ＤＶＤ再生装置やハードディスクドライブ等のコンテンツ提供装置からの映像・音声データが、ネットワークを介して伝送され、異なる部屋にあるテレビジョンモニタおよびスピーカ等で再生されることである。
【０００５】
コンテンツ提供装置から映像・音声データを受け取った送信装置は、そのデータを圧縮符号化して、例えば、家庭内ＬＡＮ（Ｌｏｃａｌ　Ａｒｅａ　Ｎｅｔｗｏｒｋ）等のネットワークに送信する。圧縮符号化されたデータをネットワークを介して受信する受信装置は、このデータをデコードしてテレビジョンモニタやスピーカに出力する。ここで利用される家庭内ＬＡＮは、例えば、１００ＢＡＳＥ－ＴＸのネットワーク接続を使用したイーサネット（登録商標）ＬＡＮや、ＩＥＥＥ８０２・１１ｂ、ＩＥＥＥ８０２・１１ｇといった規格に従う無線ＬＡＮ等である。
【０００６】
また、このシステムでは、高画質、高音質を実現するために大きなサイズとなっている映像・音声データを含むストリーミング・データを、上記ＬＡＮのような比較的帯域の狭いネットワークを利用して送信すること、および高データレートで当該ストリーミング・データを転送すると、送信装置および受信装置それぞれのＣＰＵ負荷を増大させてしまうこと等の理由により、当該ストリーミング・データを、例えば、ＭＰＥＧ－２（Ｍｏｖｉｎｇ　Ｐｉｃｔｕｒｅ　Ｅｘｐｅｒｔｓ　Ｇｒｏｕｐ－２）等の圧縮技術で圧縮する方法が用いられている。すなわち、送信装置側でそのストリーミング・データをＭＰＥＧ－２形式にエンコードし、受信装置側では、その圧縮されたストリーミング・データをデコードし、出力する。
【０００７】
このようなシステムにおいては、通常時のストリーミング・データの再生が滑らかに行われることが重要であるため、上記ストリーミング・データをデコードする受信装置内のデコーダの前段にストリーミング・データ受信用の大容量バッファが設けられる。このバッファ容量は、ネットワーク伝送遅延や、送信装置および受信装置の処理能力等を考慮して

、ある程度の余裕を持つように定められる。バッファ容量が小さいと、送信装置からのストリーミング・データの転送が遅延した場合に、デコーダが処理すべきデータがすぐになくなって、所定のタイミングで出力すべき映像および音声を提供することができず、結果的に滑らかなストリーミング・データの再生が行えないことになる。

【０００８】

こうしたストリーミング・データの遅延の原因として代表的なものは、ネットワークの帯域幅が減少することである。同一のネットワーク上で、他の送信装置から他のストリーミング・データが送出されたり、他の受信装置に同一のストリーミング・データが送出されたりすると、利用可能なネットワークの帯域幅が急激に減少する。また、無線ＬＡＮ利用時には、間に障害物が入ったり、他の機器と混信したりすることによって通信速度が低下する。

【０００９】

また、ストリーミング・データの転送プロトコルには、パケットロス対策や伝送時間の保証を行わない、例えば、ＲＴＰ（Ｒｅａｌ－ｔｉｍｅ　Ｔｒａｎｓｐｏｒｔ　Ｐｒｏｔｏｃｏｌ）のようなプロトコルが利用される。ストリーミング・データの再生においては、１フレームの映像データの到着を待つことによってストリーミング再生が遅れるよりも、その１フレームの映像・音声データが欠落する方が好ましい。その方が、ユーザにとっては自然なストリーム再生と感じられるからである。

【００１０】

同様のシステムとして、コンテンツ再生方法および装置が提案されている（特許文献１）。この方法および装置では、コンテンツの再生中に、シーン記述情報に基づいて後続のコンテンツデータの先行取得が行われる。

【００１１】

【特許文献１】

特開２００２－２６８９９９号公報

【００１２】

【発明が解決しようとする課題】

しかしながら、上述した大容量バッファを使用すると、コンテンツ提供装置によってコンテンツ（映像・音声データ）が送信されてから、その映像・音声データがユーザに視聴可能となるまでの時間（遅延時間）が長くなってしまう。これにより、例えば、ネットワーク上に障害が発生した後でコンテンツの再生が再開されるときに安定再生状態に復帰するのに長い時間がかかることになる。

【００１３】

また、このような遅延時間の長さは、ユーザがリモコン等を操作してコンテンツ提供装置に指示を送っても、その指示が表示に反映されるのに非常に長い時間がかかり、リモコン操作におけるリアルタイム性を損なうことになる。

【００１４】

例えば、ＤＶＤに記録された映画のストリーミング・データが、ＤＶＤ再生装置（コンテンツ提供装置）から、送信装置、ネットワーク、および受信装置を介してテレビジョンモニタ等に出力されているときに、ユーザが映画の言語を変更したり、視聴チャプターの変更をしたりするためにメニューを表示するように指示をした場合、そのＤＶＤ再生装置は、ユーザの指示を受け取るとすぐに対応するメニューの映像データを受信装置に向けて送信する。

【００１５】

しかしながら、バッファには、依然として映画のシーンに対応する残りのストリーミング・データが格納されているので、上記メニューの表示は、それらのシーンが全て表示された後でテレビジョンモニタに表示される。従って、ユーザは、ＤＶＤ再生装置に指示をしてから、その指示結果を見るまで非常に長い間待つ必要がある。特に、階層化された複数のメニューを表示させて、順次リモコンで指示をしていくような場合は、それぞれのメニュー表示に長い間待がかかるので、最終的な指示を行うまでに膨大な時間を要する。また

、このような遅延によって、ユーザがリモコン操作を誤る確率も増大する。

【００１６】

また、ユーザが、テレビジョンモニタ等の表示装置に表示されている映像等を観てリモコンを操作しても、そのリモコンの指示を受け取ったコンテンツ提供装置は、全く異なる先行する映像を提供しているので、その指示を受け付けることができない場合もある。

【００１７】

また更に、コンテンツ提供装置がＤＶＤ再生装置やビデオテープレコーダである場合には、リモコンによる再生や停止等の指示が、上述した遅延時間のためにユーザの期待する位置で行われないという問題もある。

【００１８】

従って、この発明の目的は、ＤＶＤ再生装置などのコンテンツ提供装置からコンテンツ（映像・音声データ）を配信する際に、小さなサイズのバッファを用いても、バッファ内にストリーミング・データが存在しない状態（アンダーフロー）や、バッファがストリーミング・データで一杯になる状態（オーバーフロー）の発生を抑止し、滑らかなストリーミング・データの再生を維持するように、上記ストリーミング・データのデコード処理の速度を調整するデータ配信システムおよび方法、ならびにデータ受信装置および方法を提供することにある。

【００１９】

また、この発明の更なる目的は、ユーザがコンテンツ提供装置に対してリモコンの操作をした場合に、バッファ内のストリーミング・データの量を判定するしきい値を動的に変更することによって、そのコンテンツがコンテンツ提供装置より配信されてから表示装置に表示されるまでの時間を短縮するように制御するデータ配信システムおよび方法、ならびにデータ受信装置および方法を提供することにある。

【００２０】

【課題を解決するための手段】

請求項１の発明は、映像データを含むコンテンツを出力するコンテンツ提供装置と、コンテンツを必要に応じてエンコードし、ストリーミング・データとしてネットワーク上に送信する送信装置と、ストリーミング・データを、ネットワークを介して受信する受信装置とを有し、受信装置は、受信されたストリーミング・データをデコード処理がされるまで記憶するバッファ手段と、バッファ手段内のストリーミング・データにデコード処理を施すとともに、デコード出力の再生速度を制御可能なデコード手段と、バッファ手段内に記憶されているストリーミング・データのデータ量を所定のタイミングで取得し、データ量が第１のしきい値以下である場合は、デコード手段が通常の速度でストリーミング・データの再生を行うよう制御し、データ量が第１のしきい値を上回った場合は、デコード手段が通常の速度より速い速度でストリーミング・データの再生を行うよう制御する再生速度制御手段とを備えることを特徴とするデータ配信システムである。

【００２１】

請求項２の発明は、映像データを含むコンテンツを出力するコンテンツ提供装置と、コンテンツを必要に応じてエンコードし、ストリーミング・データとしてネットワーク上に送信する送信装置と、ストリーミング・データを、ネットワークを介して受信する受信装置とを有し、受信装置は、受信されたストリーミング・データをデコード処理がされるまで記憶するバッファ手段と、バッファ手段内のストリーミング・データにデコード処理を施すとともに、デコード出力の再生速度を制御可能なデコード手段と、バッファ手段内に記憶されているストリーミング・データのデータ量を所定のタイミングで取得し、データ量が第２のしきい値以上である場合は、デコード手段が通常の速度でストリーミング・データの再生を行うよう制御し、データ量が第２のしきい値を下回った場合は、デコード手段が通常の速度より低い速度でストリーミング・データの再生を行うよう制御する再生速度制御手段とを備えることを特徴とするデータ配信システムである。

【００２２】

請求項３の発明は、映像データを含むコンテンツを出力するコンテンツ提供装置と、コン

テンツを必要に応じてエンコードし、ストリーミング・データとしてネットワーク上に送信する送信装置と、ストリーミング・データを、ネットワークを介して受信する受信装置とを有し、受信装置は、受信されたストリーミング・データをデコード処理がされるまで記憶するバッファ手段と、バッファ手段内のストリーミング・データにデコード処理を施すとともに、デコード出力の再生速度を制御可能なデコード手段と、バッファ手段内に記憶されているストリーミング・データのデータ量を所定のタイミングで取得し、データ量が第１のしきい値と第１のしきい値より小さい第２のしきい値の間である場合は、デコード手段が通常の速度でストリーミング・データの再生を行うよう制御し、データ量が第１のしきい値を上回った場合は、デコード手段が通常の速度より速い速度でストリーミング・データの再生を行うよう制御し、データ量が第２のしきい値を下回った場合は、デコード手段が通常の速度より低い速度でストリーミング・データの再生を行うよう制御する再生速度制御手段とを備えることを特徴とするデータ配信システムである。

【００２３】

請求項８の発明は、映像データを含むコンテンツを出力するコンテンツ提供ステップと、コンテンツを必要に応じてエンコードし、ストリーミング・データとしてネットワーク上に送信する送信ステップと、ストリーミング・データをネットワークを介して受信し、ストリーミング・データをデコード処理がされるまでバッファ手段に記憶する記憶ステップと、バッファ手段内のストリーミング・データにデコード処理を施すとともに、デコード出力の再生速度を制御可能なデコードステップと、バッファ手段内に記憶されているストリーミング・データのデータ量を所定のタイミングで取得し、データ量が第１のしきい値以下である場合は、デコードステップが通常の速度でストリーミング・データの再生を行うよう制御し、データ量が第１のしきい値を上回った場合は、デコードステップが通常の速度より速い速度でストリーミング・データの再生を行うよう制御する再生速度制御ステップとを有することを特徴とするデータ配信方法である。

【００２４】

請求項９の発明は、映像データを含むコンテンツを出力するコンテンツ提供ステップと、コンテンツを必要に応じてエンコードし、ストリーミング・データとしてネットワーク上に送信する送信ステップと、ストリーミング・データをネットワークを介して受信し、ストリーミング・データをデコード処理がされるまでバッファ手段に記憶する記憶ステップと、バッファ手段内のストリーミング・データにデコード処理を施すとともに、デコード出力の再生速度を制御可能なデコードステップと、バッファ手段内に記憶されているストリーミング・データのデータ量を所定のタイミングで取得し、データ量が第２のしきい値以上である場合は、デコードステップが通常の速度でストリーミング・データの再生を行うよう制御し、データ量が第２のしきい値を下回った場合は、デコードステップが通常の速度より低い速度でストリーミング・データの再生を行うよう制御する再生速度制御ステップとを有することを特徴とするデータ配信方法である。

【００２５】

請求項１０の発明は、映像データを含むコンテンツを出力するコンテンツ提供ステップと、コンテンツを必要に応じてエンコードし、ストリーミング・データとしてネットワーク上に送信する送信ステップと、ストリーミング・データをネットワークを介して受信し、ストリーミング・データをデコード処理がされるまでバッファ手段に記憶する記憶ステップと、バッファ手段内のストリーミング・データにデコード処理を施すとともに、デコード出力の再生速度を制御可能なデコードステップと、バッファ手段内に記憶されているストリーミング・データのデータ量を所定のタイミングで取得し、データ量が第１のしきい値と第１のしきい値より小さい第２のしきい値の間である場合は、デコードステップが通常の速度でストリーミング・データの再生を行うよう制御し、データ量が第１のしきい値を上回った場合は、デコードステップが通常の速度より速い速度でストリーミング・データの再生を行うよう制御し、データ量が第２のしきい値を下回った場合は、デコードステップが通常の速度より低い速度でストリーミング・データの再生を行うよう制御する再生速度制御ステップとを有することを特徴とするデータ配信方法である。

【００２６】
請求項１５の発明は、映像データを含むコンテンツからなるストリーミング・データを受信し、ストリーミング・データを、デコード処理がされるまで記憶するバッファ手段と、バッファ手段内のストリーミング・データにデコード処理を施すとともに、デコード出力の再生速度を制御可能なデコード手段と、バッファ手段内に記憶されているストリーミング・データのデータ量を所定のタイミングで取得し、データ量が第１のしきい値以下である場合は、デコード手段が通常の速度でストリーミング・データの再生を行うよう制御し、データ量が第１のしきい値を上回った場合は、デコード手段が通常の速度より速い速度でストリーミング・データの再生を行うよう制御する再生速度制御手段とを有することを特徴とするデータ受信装置である。

【００２７】
請求項１６の発明は、映像データを含むコンテンツからなるストリーミング・データを受信し、ストリーミング・データを、デコード処理がされるまで記憶するバッファ手段と、バッファ手段内のストリーミング・データにデコード処理を施すとともに、デコード出力の再生速度を制御可能なデコード手段と、バッファ手段内に記憶されているストリーミング・データのデータ量を所定のタイミングで取得し、データ量が第２のしきい値以上である場合は、デコード手段が通常の速度でストリーミング・データの再生を行うよう制御し、データ量が第２のしきい値を下回った場合は、デコード手段が通常の速度より低い速度でストリーミング・データの再生を行うよう制御する再生速度制御手段とを有することを特徴とするデータ受信装置である。

【００２８】
請求項１７の発明は、映像データを含むコンテンツからなるストリーミング・データを受信し、ストリーミング・データを、デコード処理がされるまで記憶するバッファ手段と、バッファ手段内のストリーミング・データにデコード処理を施すとともに、デコード出力の再生速度を制御可能なデコード手段と、バッファ手段内に記憶されているストリーミング・データのデータ量を所定のタイミングで取得し、データ量が第１のしきい値と第１のしきい値より小さい第２のしきい値の間である場合は、デコード手段が通常の速度でストリーミング・データの再生を行うよう制御し、データ量が第１のしきい値を上回った場合は、デコード手段が通常の速度より速い速度でストリーミング・データの再生を行うよう制御し、データ量が第２のしきい値を下回った場合は、デコード手段が通常の速度より低い速度でストリーミング・データの再生を行うよう制御する再生速度制御手段とを有することを特徴とするデータ受信装置である。

【００２９】
請求項２２の発明は、映像データを含むコンテンツからなるストリーミング・データを受信し、ストリーミング・データを、デコード処理がされるまでバッファ手段に記憶する記憶ステップと、バッファ手段内のストリーミング・データにデコード処理を施すとともに、デコード出力の再生速度を制御可能なデコードステップと、バッファ手段内に記憶されているストリーミング・データのデータ量を所定のタイミングで取得し、データ量が第１のしきい値以下である場合は、デコードステップが通常の速度でストリーミング・データの再生を行うよう制御し、データ量が第１のしきい値を上回った場合は、デコードステップが通常の速度より速い速度でストリーミング・データの再生を行うよう制御する再生速度制御ステップとを有することを特徴とするデータ受信方法である。

【００３０】
請求項２３の発明は、映像データを含むコンテンツからなるストリーミング・データを受信し、ストリーミング・データを、デコード処理がされるまでバッファ手段に記憶する記憶ステップと、バッファ手段内のストリーミング・データにデコード処理を施すとともに、デコード出力の再生速度を制御可能なデコードステップと、バッファ手段内に記憶されているストリーミング・データのデータ量を所定のタイミングで取得し、データ量が第２のしきい値以上である場合は、デコードステップが通常の速度でストリーミング・データの再生を行うよう制御し、データ量が第２のしきい値を下回った場合は、デコードステッ

プが通常の速度より低い速度でストリーミング・データの再生を行うよう制御する再生速度制御ステップとを有することを特徴とするデータ受信方法である。

【００３１】

請求項２４の発明は、映像データを含むコンテンツからなるストリーミング・データを受信し、ストリーミング・データを、デコード処理がされるまでバッファ手段に記憶する記憶ステップと、バッファ手段内のストリーミング・データにデコード処理を施すとともに、デコード出力の再生速度を制御可能なデコードステップと、バッファ手段内に記憶されているストリーミング・データのデータ量を所定のタイミングで取得し、データ量が第１のしきい値と第１のしきい値より小さい第２のしきい値の間である場合は、デコードステップが通常の速度でストリーミング・データの再生を行うよう制御し、データ量が第１のしきい値を上回った場合は、デコードステップが通常の速度より速い速度でストリーミング・データの再生を行うよう制御し、データ量が第２のしきい値を下回った場合は、デコードステップが通常の速度より低い速度でストリーミング・データの再生を行うよう制御する再生速度制御ステップとを有することを特徴とするデータ受信方法である。

【００３２】

この発明によれば、ＤＶＤ再生装置などのコンテンツ提供装置からコンテンツ（映像・音声データ）を配信する際に、小さなサイズのバッファを用いても、バッファ内にストリーミング・データが存在しない状態（アンダーフロー）や、バッファがストリーミング・データで一杯になる状態（オーバーフロー）の発生を抑止し、滑らかなストリーミング・データの再生を維持するように、上記ストリーミング・データのデコード処理の速度が調整される。

【００３３】

また、この発明によれば、ユーザがコンテンツ提供装置に対してリモコンの操作をした場合に、バッファ内のストリーミング・データの量を判定するしきい値を動的に変更することによって、そのコンテンツがコンテンツ提供装置より配信されてから表示装置に表示されるまでの時間を短縮するように制御される。

【００３４】

【発明の実施の形態】

以下、この発明の実施の形態について、図面を用いて説明する。また、各図にわたり、同一の構成要素には同一の符号が付されている。図１は、この発明の第１の実施の形態に係るデータ配信システム１の構成要素を示すブロック図である。

【００３５】

データ配信システム１は、コンテンツ提供装置２、送信装置４、受信装置９、表示装置１３、音声出力装置１４、およびネットワーク１５を含む。ここで、後述する受信装置９内のバッファ１６、再生速度制御部１７はそれぞれ、バッファ手段、再生速度制御手段に対応し、デコーダ１８および再生制御部１９は、デコード手段に対応する。また、コンテンツ提供装置２と送信装置４は、１つの装置として一体的に構成されてもよい。

【００３６】

コンテンツ提供装置２は、映像データおよび音声データを含むコンテンツを提供する装置であり、ＤＶＤ再生装置（ＤＶＤプレイヤー）、ビデオテープレコーダ、ビデオサーバ、アナログテレビジョン受信機、およびディジタルテレビジョン受信機等がこれに相当する。

【００３７】

また、コンテンツ提供装置２は、ＤＶＤ、ビデオカセットテープ、ハードディスク等の記録媒体からコンテンツ（映像・音声データ）を読み取り、またはディジタルテレビジョン放送やアナログテレビジョン放送を受信し、Ａ／Ｖ（Ａｕｄｉｏ／Ｖｉｓｕａｌ）データ生成部３で、そのコンテンツやテレビジョン放送を所定のフォーマットに変換し、Ａ／Ｖデータとして出力する。こうしたコンテンツ提供装置２は、通常、テレビジョンモニタ等の表示装置１３やスピーカ等の音声出力装置１４に直接接続して映像および音声を出力できる市販の装置であってもよい。また、この例では、Ａ／Ｖデータは、アナログデータと

して出力されているが、メディアの種類とコンテンツ提供装置２の機能の組み合わせによっては、ディジタルデータで出力することも可能である。

【００３８】

送信装置４は、Ａ／Ｄ変換部５、エンコーダ６、ＲＴＰ送信部７、およびネットワーク・インタフェース８を有し、受信した映像・音声データをディジタル化して圧縮し、ネットワーク１５上に送信する。

【００３９】

Ａ／Ｄ変換部５は、コンテンツ提供装置２から受信したアナログの映像・音声データをディジタルに変換する。前述したように、コンテンツ提供装置２からの出力がディジタルデータとして提供される場合、このＡ／Ｄ変換部５における処理は不要となる。

【００４０】

エンコーダ６は、Ａ／Ｄ変換部５から受信したディジタルの映像・音声データを所定の圧縮方法で圧縮する。これらのデータは、後述するように、帯域に制限のあるネットワークを介して受信装置９に送信されるので、できるだけ帯域を占有しないように圧縮されることが好ましい。また、圧縮することによって高データレートでの転送を回避し、送信装置４および受信装置９のＣＰＵ負荷を低減することも可能である。

【００４１】

こうした映像・音声データの圧縮方法としては、ＭＰＥＧ－２（Ｍｏｖｉｎｇ　Ｐｉｃｔｕｒｅ　Ｅｘｐｅｒｔｓ　Ｇｒｏｕｐ－２）が一般的に用いられている。本実施の形態では、映像データ、音声データともにＭＰＥＧ－２で圧縮符号化が行われるものとして説明を行うが、この圧縮方法に限定される必要はなく、他の圧縮方法を用いてシステムを構築することもできる。

【００４２】

次に、ＭＰＥＧ－２形式にエンコードされた映像・音声データは、ネットワーク１５上で送信を行うために、ＲＴＰ送信部７でプロトコルに応じた変調処理がされ、その後、ネットワーク・インタフェース８、ネットワーク１５、および受信装置９のネットワーク・インタフェース１０を介して受信装置９のＲＴＰ受信部１１に送信される。この例では、送信装置４と受信装置９を接続するネットワーク１５として１００ＢＡＳＥ－ＴＸのネットワーク接続からなるイーサネットＬＡＮが使用され、プロトコルはＲＴＰ（Ｒｅａｌ－ｔｉｍｅ　Ｔｒａｎｓｐｏｒｔ　Ｐｒｏｔｏｃｏｌ）が利用される。送信装置４と受信装置９との間は、その他のネットワークで接続することができ、更に、ＲＴＰ以外のプロトコルを使用することができる。例えば、ＩＥＥＥ８０２・１１ａ等の規格に基づく無線ＬＡＮでこれらの装置間でデータの転送を行うこともできる。また、これらのネットワーク接続は家庭内に限られるものと解すべきではなく、ＬＡＮ以外にも、ＷＡＮ（Ｗｉｄｅ　Ａｒｅａ　Ｎｅｔｗｏｒｋ）やＭＡＮ（Ｍｅｔｒｏｐｏｌｉｔａｎ　Ａｒｅａ　Ｎｅｔｗｏｒｋ）に適用することができる。更に、特定のネットワーク・トポロジーに限定されるものでもない。

【００４３】

コンテンツ提供装置２のなかには、ＤＶＤメディアやハードディスク内に、既にＭＰＥＧ－２のＴＳ（Ｔｒａｎｓｐｏｒｔ　Ｓｔｒｅａｍ：トランスポート・ストリーム）の形式で映像・音声データを記憶しているものもある。従って、そのような形式のデータを送信する場合、Ａ／Ｄ変換部５およびエンコーダ６を使用する必要はない。

【００４４】

本実施の形態に係るデータ配信システム１が、家庭内でホームシアターを構成するために用いられる場合は、コンテンツ提供装置２や送信装置４は、通常、リビング等の同じ部屋に配置される。受信装置９は、コンテンツ提供装置２等と同じ部屋に置かれることもあるが、離れた別の部屋に置かれることもある。

【００４５】

また、図１に示すデータ配信システム１をクライアント・サーバ型のシステムと考えれば、送信装置４がサーバであり、受信装置９がクライアントという関係になる。また、前述

したように、受信装置９が表示装置１３および音声出力装置１４と一体的に形成され、例えば、１つのテレビジョン受信機として構成される場合は、このテレビジョン受信機がクライアントとなる。

【００４６】

受信装置９は、ネットワーク・インタフェース１０、ＲＴＰ受信部１１、およびデコード部１２を有する。ネットワーク・インタフェース１０は、送信装置４のネットワーク・インタフェース８から送信されたストリーミング・データをネットワーク１５を介して受信する。ＲＴＰ受信部１１は、ネットワーク・インタフェース１０からのストリーミング・データを復調し、ＭＰＥＧ－２のＴＳを生成する。

【００４７】

デコード部１２は、上記ＴＳから映像データ、音声データを個別にデコードし、それぞれの出力装置に（すなわち、映像データはテレビジョンモニタ等の表示装置１３に、音声データはスピーカ等の音声出力装置１４に）再生タイミングを調整した上で出力する。

【００４８】

この例では、受信装置９、表示装置１３、および音声出力装置１４は、それぞれ別の装置として表されているが、受信装置９に、表示装置１３と音声出力装置１４の両方、またはどちらか一方を組み込んで単一の装置として構成することもできる。例えば、受信装置９の構成要素を全て含んだディジタルテレビジョン受信機を構成することができる。

【００４９】

このようなシステムでは、ネットワーク環境などにより多少のデータが欠落しても後続のデータが影響なく再生できるために、（ＯＳＩ参照モデルにおける）トランスポートレイヤのプロトコルとして、再送制御を行わないＵＤＰが利用されることが多い。本実施の形態で使用するＲＴＰもトランスポートレイヤにＵＤＰを利用するプロトコルである。

【００５０】

ＲＴＰ送信部７では、映像・音声データの圧縮符号化がエンコーダ６によって行われた段階で、受信装置９の状態に関係なく圧縮符号化されたストリーミング・データを受信装置９のネットワーク・インタフェース１０に送出する。従って、受信装置９では、デコード部１２の処理状態に関係なく当該ストリーミング・データを受け取ることになる。ストリーミング・データの受信間隔は一定でなく、また一回に受信するストリーミング・データのサイズもコンテンツの内容等によって変化する。デコード部１２が、ストリーミング・データのデコード処理をしている間に後続のストリーミング・データを受信しても、そのストリーミング・データをすぐに処理することはできない。

【００５１】

そのため、デコード部１２は、受信したストリーミング・データを蓄積するバッファを備え、デコード処理中に受信したストリーミング・データを後で処理できるようにしている。以下に、デコード部１２によるバッファの利用態様を、図２を参照して説明する。また、ここで説明するバッファは、例えば、ＭＰＥＧ－２のＴＳ（トランスポート・ストリーム）を記憶するものであり、ＴＳは、ビデオ・ストリームとオーディオ・ストリームを含むデータ・ストリームである。従ってこの場合は、バッファを１つ設ければよいが、映像データと音声データを別のデータ・ストリームで転送するような場合は、映像データと音声データそれぞれにバッファを設けるように構成してもよい。

【００５２】

図２は、デコード部１２が、ＲＴＰ受信部１１からストリーミング・データを受信してバッファ１６に記憶し、それを順次処理する態様が概念的に示されている。また、この図に示す例では、デコード部１２は、バッファ１６、再生速度制御部１７、デコーダ１８、および再生制御部１９を備えている。

【００５３】

最初に、ＲＴＰ受信部１１は、ネットワーク・インタフェース１０から送信装置４により送信されたストリーミング・データ（ＭＰＥＧ－２形式に圧縮符号化された映像・音声データ）を受信すると、そのデータをバッファ１６に送信する。バッファ１６は、例えば、

リングバッファ構成をとるＦＩＦＯ（Ｆｉｒｓｔ－Ｉｎ　Ｆｉｒｓｔ－Ｏｕｔ）型のメモリであり、当該ストリーミング・データを受信してそれらを蓄積する。バッファ１６内のストリーミング・データは、最初に受信したものから順に、デコーダ１８および再生制御部１９に提供され、そこでストリーミング・データのデコード処理を含む再生処理が行われる。デコーダ１８によるデコード処理では、ＭＰＥＧ－２形式のデータが、映像データ、音声データに分離され、出力装置が扱うデータ形式にそれぞれ変換され、変換されたデータが当該出力装置に送信される。映像データは、表示装置１３に出力するための形式に変換され、音声データは、音声出力装置１４に出力するための形式に変換される。

【００５４】

コンテンツの再生中に、バッファ１６に一定期間ストリーミング・データの受信がなく、デコーダ１８および再生制御部１９が、全てのストリーミング・データについて再生処理を終えた場合、デコーダ１８は次に処理すべきストリーミング・データを取得することができない。このような状態を「アンダーフロー」と言い、表示装置１３には同じフレームの映像が繰り返し表示されるフリーズ状態となる。

【００５５】

逆に、デコーダ１８および再生制御部１９でストリーミング・データの再生処理を行うペース以上にストリーミング・データを受信する場合、バッファ１６はストリーミング・データで一杯になり、新たに受信したストリーミング・データを消失するかまたは最新のデータを上書きする。これは「オーバーフロー」と呼ばれる状態で、表示装置１３には、上記消失したデータ、または上書きされたデータに対応するフレームがスキップされて表示される。

【００５６】

このような事象の発生を回避するためには、バッファ容量にマージンを加え、バッファ容量をある程度大きめに設定する必要がある。本実施の形態では、バッファ容量を、受信装置９におけるストリーミング・データの受信間隔、受信するストリーミング・データの平均サイズ、デコーダ１８および再生制御部１９の処理能力、コンテンツ提供装置２からＡ／Ｖデータが生成されてから受信装置９でストリーミング・データがデコード・再生されるまでの遅延時間等を考慮して設定する。

【００５７】

更に、本実施の形態では、例えば、図２に示すようなアンダーフローしきい値およびオーバーフローしきい値を設定するとともに、再生速度制御部１７が、バッファ１６内に記憶されたストリーミング・データの量を監視・取得する。再生速度制御部１７は、こうして取得されたストリーミング・データの量が上記アンダーフローしきい値を下回っていると判定した場合は、デコーダ１８および再生制御部１９による再生処理を低速にするよう制御し、オーバーフローしきい値を上回っていると判定した場合は、デコーダ１８および再生制御部１９による再生処理を高速にするよう制御する。

【００５８】

デコーダ１８および再生制御部１９による再生処理は、上記ＭＰＥＧ－２形式のデータをデコードしてから、当該データを表示装置１３や音声出力装置１４に再生出力するまでの処理を意味する。

【００５９】

オーバーフローしきい値は、バッファに蓄積されたストリーミング・データの量がこの値を超えた場合に、オーバーフローに近い状態であることを示すために設定されているので、バッファ１６の容量（最大容量）より小さい値で、かつこの容量の値にある程度近接する値である必要がある。同様に、アンダーフローしきい値は、バッファに蓄積されたストリーミング・データの量がこの値を下回った場合に、アンダーフローに近い状態であることを示すために設定されているので、ゼロより大きい値で、かつこのゼロの値にある程度近接する値である必要がある。例えば、図２では、オーバーフローしきい値は、バッファ１６の最大容量の位置から、バッファ１６の容量の１／７だけ下の位置（小さい値）に設定されている。一方、アンダーフローしきい値は、バッファ１６のゼロの位置から、バッ

ファ１６の容量の１／７だけ上の位置（大きい値）に設定されている。

【００６０】

デコーダ１８および再生制御部１９は協働して、再生速度制御部１７から指定された再生速度に基づきストリーミング・データの再生速度を調整するが、この速度調整には、様々な方法が考えられる。例えば、高速な再生処理を行う場合は、１秒間に６０フィールドの元の映像データを数フィールド減らして１秒より短い時間で再生する。逆に、低速な再生処理を行う場合は、上記６０フィールドに数フィールドを補間して１秒より長い時間で再生する。当該フィールドの補間は、２４コマの映画フィルムを３０コマのＤＶＤ用の映像に変換するテレシネ変換と同様の方法で行われる。こうした速度変更のための処理はフィールド単位で行われることが望ましいが、フレームなどのその他の単位で行うこともできる。

【００６１】

また、ＭＰＥＧ－２のＴＳが有するＰＴＳ（Ｐｒｅｓｅｎｔａｔｉｏｎ　Ｔｉｍｅ　Ｓｔａｍｐ）等の情報を元に、ストリーミング・データのデコード処理の開始時間を調整することもできる。

【００６２】

これらの方法を用いることによって、人間がその速度差にほとんど気づかない高速化および低速化を行うこともできる。

【００６３】

このようなデコーダ１８および再生制御部１９の再生速度の調整によって、バッファ１６内のストリーミング・データの量がアンダーフローしきい値を下回っている場合は、しだいにストリーミング・データがバッファ１６内に蓄積され、当該データの量がアンダーフローしきい値を上回る状態になる。一方、バッファ１６内のストリーミング・データの量がオーバーフローしきい値を上回っている場合は、しだいにストリーミング・データがバッファ１６内で減少し、当該データの量がオーバーフローしきい値を下回る状態になる。この結果、バッファ１６内に蓄積されたストリーミング・データの量が、アンダーフローしきい値とオーバーフローしきい値との間の値となった場合、再生速度制御部１７は、再生処理を通常の速度に戻すよう制御する。

【００６４】

次に、上述した再生速度制御部１７の動的な制御を、図３のフローチャートを用いて説明する。図３に示された処理は、所定のタイミングで繰り返し起動されるが、このタイミングは通常、再生速度制御部１７がバッファ１６を監視するタイミングと一致するものである。

【００６５】

最初に、ステップＳ１０で、再生速度制御部１７がバッファ１６内のストリーミング・データのデータ量を検出する。次に、ステップＳ１１で、この検出値と上記各しきい値との比較を行う。データ量の値がオーバーフローしきい値より大きい場合は、ステップＳ１２に進み、再生速度を高速にするよう制御する。データ量の値がアンダーフローしきい値より小さい場合は、ステップＳ１４に進み、再生速度を低速にするよう制御する。データ量の値がアンダーフローしきい値以上で、オーバーフローしきい値以下である場合は、ステップＳ１３に進み、再生速度を通常の速度にするよう制御する。

【００６６】

以上説明したように、それぞれのステップＳ１２、ステップＳ１３、ステップＳ１４で、再生速度が切り換えられるが、以前の制御によって、既に同じ速度に切り換えられている場合は、各ステップで速度切換制御を行う必要はない。また、本実施の形態の例では、２つのしきい値が用いられているが、より多くのしきい値を設定して、再生速度をより詳細なレベルで切り換えるように制御することもできる。

【００６７】

本実施の形態によって、結果的に、従来のものより小さいサイズのバッファを使用しても、バッファ内に処理すべきストリーミング・データが存在しない状態（アンダーフロー）

や、バッファがストリーミング・データで一杯になる状態（オーバーフロー）が発生する可能性を低減することができる。また、本実施の形態において従来のサイズのバッファを用いた場合は、上記オーバーフローおよびアンダーフローの発生確率がより一層低減される。

【００６８】

次に、図４ないし図７を参照して、この発明の第２の実施の形態に係るデータ配信システムについて説明する。図４は、第２の実施の形態に係るデータ配信システム２０の構成を表すブロック図である。

【００６９】

本実施の形態のデータ配信システム２０は、コンテンツ提供装置２１で生成されたＡ／Ｖデータが、送信装置２４でＭＰＥＧ－２等の好適な圧縮フォーマットにエンコードされ、ネットワーク４２を介して受信装置３２に送信され、最終的に表示装置４０および音声出力装置４１に映像や音声として出力されるという点で、前述の第１の実施の形態に係るデータ配信システム１と共通している。

【００７０】

すなわち、データ配信システム２０のＡ／Ｖデータ生成部２２、Ａ／Ｄ変換部２５、エンコーダ２６、ＲＴＰ送信部２７、およびＲＴＰ受信部３４は、データ配信システム１のＡ／Ｖデータ生成部３、Ａ／Ｄ変換部５、エンコーダ６、ＲＴＰ送信部７、およびＲＴＰ受信部１１と同様の機能を有している。従って、これらについては、詳細な説明を省略する。

【００７１】

データ配信システム２０は、データ配信システム１の機能に加え、ユーザがリモートコントロールコマンダ（以下、リモコンと称する）によって、コンテンツ提供装置２１に指示を送信する機能を有している。ユーザのリモコン操作の内容は、受信装置３２によって受信され、ネットワーク４２、および送信装置２４を介してコンテンツ提供装置２１に伝えられる。コンテンツ提供装置２１と表示装置４０は、遠く隔てて置かれたり、別の部屋の置かれたりする場合があり、このような状況では、リモコンによってコンテンツ提供装置２１を直接操作することはできない。従って、このように映像・音声データとは逆の経路でリモコンの指示をネットワークを介して伝えられることは、ユーザの操作性を向上するうえで好ましい構成であると言える。

【００７２】

また、この例では、コンテンツ提供装置２１に対する指示をリモコン３９によって行うこととしているが、受信装置３２に接続されたキーボード、マウス、タッチパネル等の他の入力装置を用いて当該指示を行うこともできる。

【００７３】

ここで、後述する受信装置９内のバッファ５１、再生速度制御部５２はそれぞれ、バッファ手段、再生速度制御手段に対応し、デコーダ５３および再生制御部５４は、デコード手段に対応する。また、リモコン３９は信号入力装置に対応し、後述するＩＲコード処理部３７は信号処理手段に対応し、表示装置４０は表示手段に対応する。更に、コンテンツ提供装置２１と送信装置２４は、前述した第１の実施の形態と同様に、１つの装置として一体的に構成され得る。

【００７４】

次に、図４のブロック図を参照して、リモコン３９による指示が伝えられる経路の順に、関連する構成要素を説明する。リモコン３９は、コンテンツ提供装置２１のリモコンであっても良いが、後で説明するコマンド変換部２９の機能により、別のリモコン３９を使用してコンテンツ提供装置に指示を送信することもできる。例えば、表示装置４０や受信装置３２に対する指令を送信することができ、更に異なるメーカからなる複数のコンテンツ提供装置２１にそれぞれ指示を送信することのできるようなものをリモコン３９として構成することができる。

【００７５】

コンテンツ提供装置２１に対するリモコン３９の指令は、例えば、コンテンツ提供装置２１がＤＶＤ再生装置であれば、ＤＶＤのコンテンツメニューの表示、コンテンツの再生、停止、チャプター一覧の表示等が考えられる。また、コンテンツ提供装置２１がディジタルテレビジョン受信装置であれば、チャンネルの変更や、データ放送を利用した双方向サービスに関する指示等が考えられる。

【００７６】

ユーザが、コンテンツ提供装置２１の操作を行うためにリモコン３９のボタンを押して指示を送信すると、その指示内容に対応する制御信号（赤外線信号）が発信される。リモコン３９は、所定のタイミングで所定のパルスを発信し、これらのタイミングの組み合わせによって、指示内容、指示対象機器、機器メーカ等を特定する。

【００７７】

こうして発信された赤外線信号は、受信装置３２の赤外線受光部３８によって受信され、ＩＲコードをＩＲコード処理部３７に送信する。ＩＲコード処理部３７は受信したＩＲコードを所定のルールに基づいて符号化し、制御コマンドを生成する。制御コマンドは次に、制御コマンド送信部３６に送信され、そこで、送信プロトコルに応じた変調処理が行われ、ネットワーク・インタフェース３３に送られる。

【００７８】

制御コマンド送信部３６によって変調された変調データは、ネットワーク・インタフェース３３から、ネットワーク４２および送信装置２４のネットワーク・インタフェース３１を介して制御コマンド受信部３０に送信される。この例では、上記変調データが、第１の実施の形態で説明したストリーミング・データの転送と同じ経路、すなわち、ネットワーク４２を介して転送されるが、別の経路を利用して転送することもできる。

【００７９】

ネットワーク・インタフェース３１によって受信された変調データは、制御コマンド受信部３０に送信され、そこで復調処理が行われ、制御コマンドが得られる。ここで得られた制御コマンドは、リモコン３９のメーカに依存したものである。従って、指示対象のコンテンツ提供装置２１が別のメーカである場合や、リモコン３９からの指示を想定していない場合には、そのリモコン３９からの制御コマンドを解釈することができない。そのような場合に、コマンド変換部２９は、受信した制御コマンドを、指示対象のコンテンツ提供装置２１の機種に対応した制御コマンドに変換する。

【００８０】

この変換は、例えば、事前に用意された変換テーブルを参照することによって行われる。変換テーブルは、例えば、各メーカ（機種）に対するそれぞれの制御コマンドが、何の操作を意味するかを対応付けて格納する。コマンド変換部２９は、変換テーブルを参照して、ネットワーク・インタフェース３１から受信した制御コマンドの内容とリモコン３９が対応するメーカ（機種）から、そのコマンドがどの操作を指示するものであるかを判定する。次に、コマンド変換部２９は、再び、変換テーブルを参照して、当該判定された操作をコンテンツ提供装置２１に指示するための制御コマンドを検索し、取得する。

【００８１】

こうして取得されたコンテンツ提供装置２１用の制御コマンドの内容は、赤外線の各パルスの発生タイミングを表すものであり、赤外線発光部２８は、この内容に沿って赤外線を出力する。

【００８２】

赤外線発光部２８から発信された赤外線は、コンテンツ提供装置２１の赤外線受光部２３によって受信され、これがコンテンツ提供装置２１によって解釈され、その解釈された内容に従って、所定の操作が行われる。

【００８３】

次に、図５を参照して本実施の形態の受信装置３２のデコード部３５の処理内容について説明する。本実施の形態のデコード部３５は、第１の実施の形態の受信装置９のデコード部１２と同様、バッファ５１および再生速度制御部５２を有し、再生速度制御部５２が、

バッファ５１内のストリーミング・データの量に応じてストリーミング・データの再生速度を変化させるよう制御して、滑らかな映像・音声データの再生を維持しようとする。

【００８４】

しかしながら、バッファ５１を有するために、コンテンツ提供装置２１のＡ／Ｖデータ生成部２２からＡ／Ｖデータが生成されてから、映像・音声データが表示装置４０、音声出力装置４１に出力されるまでに非常に大きな遅延時間が存在する。このことは、ユーザがリモコン３９を操作してコンテンツ提供装置２１に指示を送っても、その指示が反映されるのに非常に長い時間がかかることを意味する。特に、階層化されたメニューを表示させて、順次リモコンで指示をしていくような場合は、それぞれの表示を長い間待つ必要があるので、最終的に指示を完了するまでに膨大な時間がかかる。

【００８５】

また、ユーザが、表示装置４０に表示されている映像等を観てリモコン３９を操作しても、そのリモコン３９の指示を受け取ったコンテンツ提供装置２１は、後続の映像等を提供しているので、その指示を受け付けるモードにない場合もある。

【００８６】

また更に、コンテンツ提供装置２１がＤＶＤ再生装置やビデオテープレコーダである場合には、リモコン３９による指示が遅れるため、所望する再生位置や停止位置で表示が行われないなどの不都合もある。

【００８７】

このような問題を解決するために、本実施の形態のデコード部３５の再生速度制御部５２は、ユーザがリモコン３９の操作をした場合に、ＩＲコード処理部３７からの信号により、オーバーフローしきい値を小さくするように制御し、ユーザが、リモコン３９を一定時間使用しないと、通常のオーバーフローしきい値に戻すよう制御する。この制御によって、ユーザがリモコン３９を操作した場合は、バッファ５１内のストリーミング・データが通常の量であっても、オーバーフローしきい値を上回ることになり、デコーダ５３と再生制御部５４によって高速な再生処理が実現される。

【００８８】

従って、再生速度制御部５２は、バッファ５１内のストリーミング・データとしきい値を比較して、その結果に応じて再生速度を変化させるよう制御する点については、図３に関連して説明した第１の実施の形態における再生速度制御部１７と同様である。しかしながら、当該機能に加えて、オーバーフローしきい値を動的に変化させることによってリモコン３９が操作された際の応答速度を速めることができる。

【００８９】

すなわち、本実施の形態では、ユーザがリモコンを操作した場合は、コンテンツ提供装置２１からＡ／Ｖデータが提供されてから、表示装置４０等に実際に映像が表示されるまでの遅延時間を小さくすることができる。

【００９０】

図５は、このオーバーフローしきい値の変更を概念的に示す概略図である。バッファ５１内のうち、斜線で示されている部分にストリーミング・データが記憶されているものとする。オーバーフローしきい値として、通常しきい値と操作時しきい値のどちらかが選択される。図５に示されたストリーミング・データの量では、オーバーフローしきい値が通常しきい値に設定されている場合、デコーダ５３および再生制御部５４は、通常の速度でストリーミング・データの再生処理を行うが、ユーザがリモコン３９を操作して、オーバーフローしきい値が操作時しきい値に設定された場合、バッファ５１内のストリーミング・データのデータ量がオーバーフローしきい値を上回ることになり、デコーダ５３および再生制御部５４は、高速でストリーミング・データの再生処理を行う。

【００９１】

ここで、通常しきい値は、図２に示した第１の実施の形態のオーバーフローしきい値と同様のものである。操作時しきい値は、この通常しきい値とアンダーフローしきい値との間で任意に設定しうるが、通常しきい値に近い値をとると、高速な再生処理が長く継続され

ずに、実効があがらない可能性がある。図５の例では、バッファ５１の容量の中程よりやや下に設定されている。

【００９２】

デコーダ５３および再生制御部５４は、再生速度制御部５２から再生速度を受け取ると、その速度でストリーミング・データが表示装置４０等に出力されるようにデコード処理および再生制御を行う。再生速度の調整方法は、第１の実施の形態のデコーダ１８および再生制御部１９について説明したものと同様の方法が考えられる。

【００９３】

図６は、再生速度制御部５２の機能を詳細に説明するためのブロック図である。ユーザがリモコン３９を操作すると、受信装置３２の赤外線受光部３８からＩＲコード処理部３７にＩＲコードが送信される。ＩＲコード処理部３７は、ＩＲコードを受け取ると、それを制御コマンドに変換して制御コマンド送信部３６に送信するとともに、再生速度制御部５２にＩＲビジー信号を送信する。

【００９４】

再生速度制御部５２のタイマー６３は、一定期間内にＩＲコード処理部３７からＩＲビジー信号を受け取ると、セレクタ６２に、オーバーフローしきい値として操作時しきい値を設定するよう指示する。一定期間内にＩＲビジー信号を受け取らなかった場合は、セレクタ６２に、オーバーフローしきい値として、操作時しきい値より大きい通常しきい値を設定するよう指示する。

【００９５】

バッファ内データ量取得部６１は、バッファ５１内のストリーミング・データのデータ量を取得し、再生速度決定部６４に送信する。ここで、再生速度決定部６４は、図３に示すものと同様のプロセスで、バッファ内のデータ量と、オーバーフローしきい値およびアンダーフローしきい値を比較し、再生速度を決定する。再生速度決定部６４に入力されるオーバーフローしきい値は、前述のように、セレクタ６２によって適宜切り換えられたものである。

【００９６】

上述したしきい値の切り換えプロセスを図７のフローチャートを参照して説明する。最初に、タイマー６３が、ステップＳ２１でＩＲビジー信号を受信したかどうか判定する。受信したと判定された場合、ステップＳ２２に進み、そこでセレクタ６２に、オーバーフローしきい値として操作時しきい値を設定するよう指示する。

【００９７】

ステップＳ２１でＩＲビジー信号を受信していないと判定された場合、一定の周期でステップＳ２１の判定を繰り返し（ステップＳ２３のＮＯ）、一定時間が経過したら、ステップＳ２４に進む（ステップＳ２３のＹＥＳ）。ステップＳ２４では、セレクタ６２に、オーバーフローしきい値として通常しきい値を設定するよう指示する。

【００９８】

ここまで、この発明の第１および第２の実施の形態に係るデータ配信システム１、２０について、コンテンツが映像データおよび音声データを含むものとして説明してきたが、同様に、映像データのみを含むコンテンツを扱うことも可能である。映像データは、音声データに比べてサイズが大きいので、この発明による効果はより顕著である。

【００９９】

【発明の効果】

この発明によれば、ＤＶＤ再生装置などのコンテンツ提供装置からコンテンツ（映像・音声データ）を配信する際に、小さなサイズのバッファを用いても、バッファ内にストリーミング・データが存在しない状態や、バッファがストリーミング・データで一杯になる状態の発生をできるだけ抑止し、滑らかなストリーミング・データの再生を維持するように制御することができる。

【０１００】

また、この発明によれば、ユーザがコンテンツ提供装置に対してリモコンの操作をした場

合に、バッファ内のストリーミング・データの量を判定するしきい値を動的に変更することによって、そのコンテンツがコンテンツ提供装置より配信されてから表示装置に表示されるまでの時間を短縮するように制御することができる。

【図面の簡単な説明】

【図１】この発明の第１の実施の形態に係るデータ配信システムの構成を示すブロック図である。

【図２】図１に示すデータ配信システムのデコード部の構成を示すブロック図である。

【図３】図２に示すデータ配信システムの再生速度制御部が再生速度を決定するプロセスのフローチャートである。

【図４】この発明の第２の実施の形態に係るデータ配信システムの構成を示すブロック図である。

【図５】図４に示すデータ配信システムのデコード部の構成を示すブロック図である。

【図６】図５に示すデータ配信システムの再生速度制御部の構成を示すブロック図である。

【図７】図６に示すデータ配信システムの再生速度制御部がしきい値を切り換えるプロセスのフローチャートである。

【符号の説明】

１，２０・・・データ配信システム、２，２１・・・コンテンツ提供装置、４，２４・・・送信装置、９，３２・・・受信装置、１２，３５・・・デコード部、１３，４０・・・表示装置、１４，４１・・・音声出力装置、１５，４２・・・ネットワーク、１６，５１・・・バッファ、１７，５２・・・再生速度制御部、１８，５３・・・デコーダ、３７・・・ＩＲコード処理部、３９・・・リモコン

【図１】

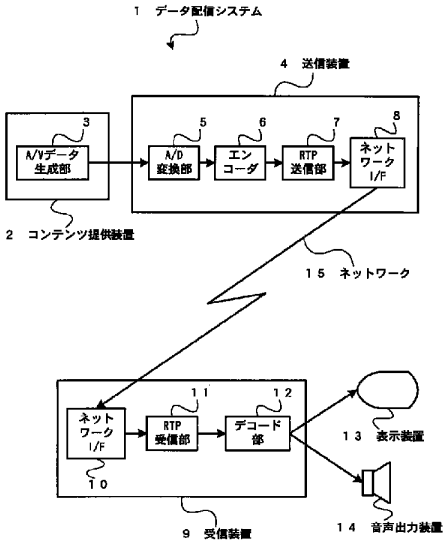

【図２】

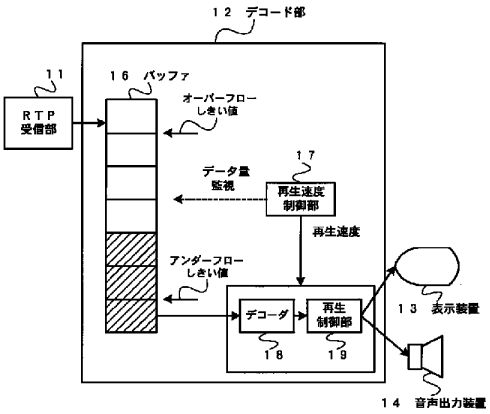

【図３】

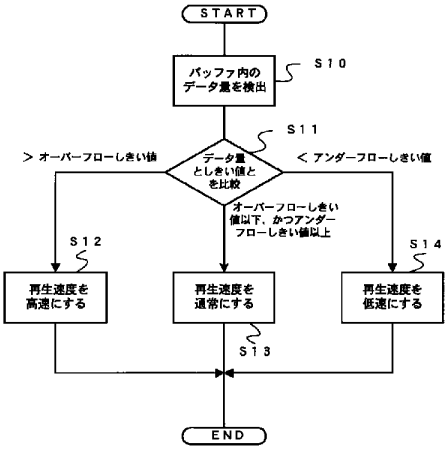
START
バッファ内のデータ量を検出
S10
S11
データ量としきい値とを比較
＞オーバーフローしきい値
＜アンダーフローしきい値
オーバーフローしきい値以下、かつアンダーフローしきい値以上
S12
S14
再生速度を高速にする
再生速度を通常にする
再生速度を低速にする
S13
END

【図４】

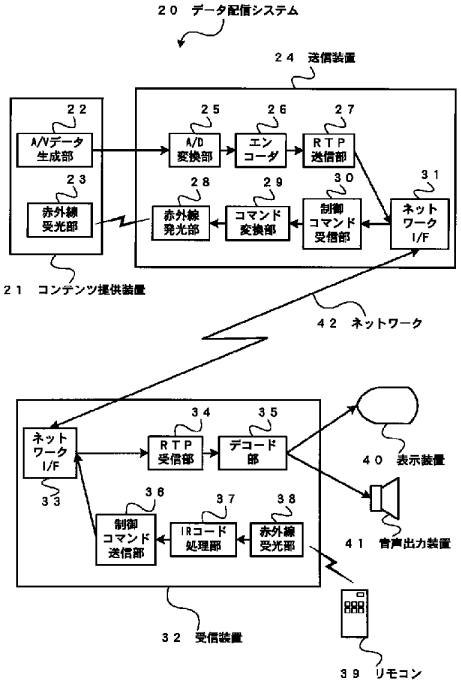
20 データ配信システム
24 送信装置
22
A/Vデータ生成部
23
赤外線受光部
25
A/D変換部
26
エンコーダ
27
RTP送信部
28
赤外線発光部
29
コマンド変換部
30
制御コマンド受信部
31
ネットワークI/F
21 コンテンツ提供装置
42 ネットワーク
ネットワークI/F
33
34
RTP受信部
35
デコード部
36
制御コマンド送信部
37
IRコード処理部
38
赤外線受光部
40 表示装置
41 音声出力装置
32 受信装置
39 リモコン

【図５】

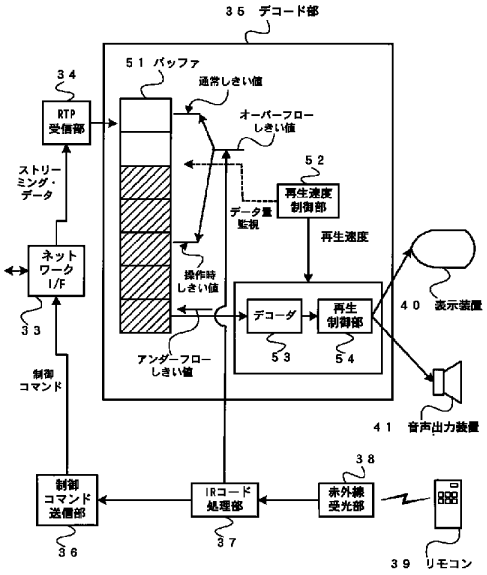
35 デコード部
51 バッファ
通常しきい値
オーバーフローしきい値
34
RTP受信部
ストリーミング・データ
52
再生速度制御部
データ量監視
再生速度
ネットワークI/F
33
操作時しきい値
アンダーフローしきい値
デコーダ
再生制御部
53
54
40 表示装置
41 音声出力装置
制御コマンド
制御コマンド送信部
36
IRコード処理部
37
38
赤外線受光部
39 リモコン

【図６】

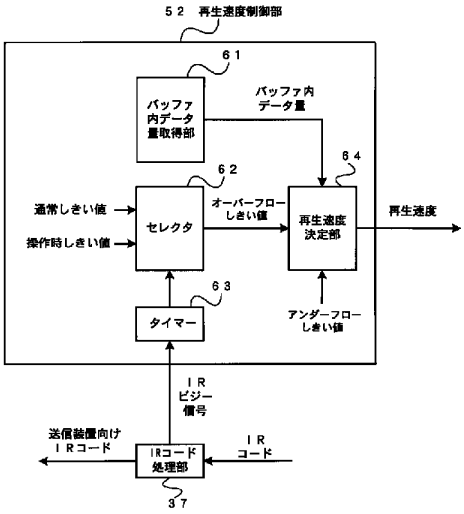
52 再生速度制御部
61
バッファ内データ量取得部
バッファ内データ量
62
64
通常しきい値
操作時しきい値
セレクタ
オーバーフローしきい値
再生速度決定部
再生速度
63
タイマー
アンダーフローしきい値
IRビジー信号
送信装置向けIRコード
IRコード処理部
IRコード
37

[7]

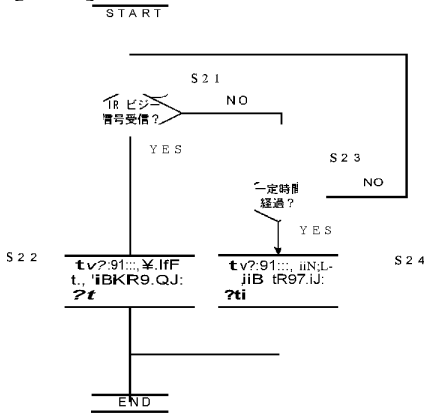
START
S21
IR ビジ
信号受信？
NO
YES
S23
NO
一定時間
経過？
YES
S22
tv?:91:::, ¥.IfF
t., 'iBKR9.QJ:
?t
tv?:91:::, iiN;L-
jiB tR97.iJ:
?ti
S24
END

(12) INTERNATIONAL APPLICATION PUBLISHED UNDER THE PATENT COOPERATION TREATY (PCT)

(19) World Intellectual Property Organization
International Bureau

(43) International Publication Date
18 November 2004 (18.11.2004)

PCT

(10) International Publication Number
WO 2004/100500 A2

(51) International Patent Classification[7]: H04L 29/12

(21) International Application Number: PCT/US2004/013859

(22) International Filing Date: 4 May 2004 (04.05.2004)

(25) Filing Language: English

(26) Publication Language: English

(30) Priority Data:
60/467,928 5 May 2003 (05.05.2003) US

(71) Applicant (*for all designated States except US*): THOMSON LICENSING S.A. [FR/FR]; 46, Quai A. Le Gallo, F-92648 Boulogne (FR).

(72) Inventors; and
(75) Inventors/Applicants (*for US only*): GRIMES, Kevin, Lloyd [US/US]; 12427 Haydon Court, Fishers, IN 46038 (US). BURNETT, Angela, Renee [US/US]; 6821 Bretton Wood Drive, Indianapolis, IN 46268 (US).

(74) Agents: TRIPOLI, Joseph, S. et al.; c/o Thomson Licensing Inc., 2 Independence Way, Suite 200, Princeton, NJ 08540 (US).

(81) Designated States (*unless otherwise indicated, for every kind of national protection available*): AE, AG, AL, AM, AT, AU, AZ, BA, BB, BG, BR, BW, BY, BZ, CA, CH, CN, CO, CR, CU, CZ, DE, DK, DM, DZ, EC, EE, EG, ES, FI, GB, GD, GE, GH, GM, HR, HU, ID, IL, IN, IS, JP, KE, KG, KP, KR, KZ, LC, LK, LR, LS, LT, LU, LV, MA, MD, MG, MK, MN, MW, MX, MZ, NA, NI, NO, NZ, OM, PG, PH, PL, PT, RO, RU, SC, SD, SE, SG, SK, SL, SY, TJ, TM, TN, TR, TT, TZ, UA, UG, US, UZ, VC, VN, YU, ZA, ZM, ZW.

(84) Designated States (*unless otherwise indicated, for every kind of regional protection available*): ARIPO (BW, GH, GM, KE, LS, MW, MZ, NA, SD, SL, SZ, TZ, UG, ZM, ZW), Eurasian (AM, AZ, BY, KG, KZ, MD, RU, TJ, TM), European (AT, BE, BG, CH, CY, CZ, DE, DK, EE, ES, FI, FR, GB, GR, HU, IE, IT, LU, MC, NL, PL, PT, RO, SE, SI, SK, TR), OAPI (BF, BJ, CF, CG, CI, CM, GA, GN, GQ, GW, ML, MR, NE, SN, TD, TG).

Published:
— *without international search report and to be republished upon receipt of that report*

For two-letter codes and other abbreviations, refer to the "Guidance Notes on Codes and Abbreviations" appearing at the beginning of each regular issue of the PCT Gazette.

(54) Title: SYSTEM AND METHOD FOR COMMUNICATING WITH A DISPLAY DEVICE VIA A NETWORK

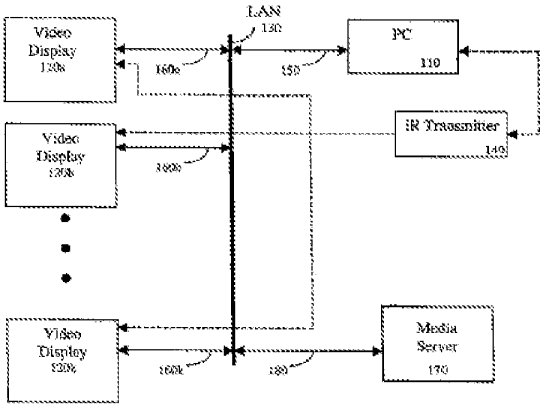

(57) Abstract: A system (100) and corresponding methods are provided for enabling communication with an electronic apparatus via a network. The system comprises: a first device (140) for transmitting a communication comprising identification parameters associated with a second device (110), wherein the communication is compatible with a communication protocol of a first electronic apparatus (120a, b …k); a first electronic apparatus for communicating with the second device, wherein first electronic apparatus comprises a first interface for wirelessly communicating with the first device and a second interface for communicating with the second device via a network (130); and a second device for communicating with the first electronic apparatus, with the second device communicating the first electronic apparatus via the network.

WO 2004/100500 A2

SYSTEM AND METHOD FOR COMMUNICATING WITH A DISPLAY DEVICE VIA A NETWORK

FIELD OF THE INVENTION

The present invention relates to communicating with an electronic apparatus and, more particularly, to a system and method for communicating with a video display device via a network.

BACKGROUND OF THE INVENTION

Electronic appliances such as video display devices may be controlled via a computer through a network connection. Adjustments such as changing the volume or color alignment are no longer performed by adjusting a knob on a video display device such as a television rather they are performed digitally by interfacing with a menu on the video display device's screen or via an infrared remote. The introduction of computer controlled video display devices has enhanced the features and capabilities of modern video display devices. For example, computer controlled video display devices can be electronically diagnosed for service or repair, subjected to automated testing and controlled to perform a variety of functions. In addition, these video display devices can be connected together via a local area network (LAN) using networking protocols such as Ethernet, token ring, asynchronous transfer mode (ATM), etc.

In order to perform a desired function such as the servicing or testing a computer controllable video display device, a number of communication techniques have been developed by video display device manufacturers and service providers to realize such operations. These techniques typically require a computer and an infrared transmitter, which are used by a service technician, to communicate with a computer controlled video display device. The communication channel between the computer and the video display device sometimes takes place over an Ethernet connection. For security reasons, however, the computer controlled video display device will typically only allow access to a computer that is compatible with the video display device, thereby, preventing an un-authorized user from gaining access to the video display device.

In order to communicate with a video display device via a computer, a service technician having knowledge of the video display device's IP address and port reconfigures the IP address and port of their computer. This process can be somewhat prohibitive due to a lack of networking knowledge by the service technician and the proliferation of operating systems that preclude the ability to automate the configuration and restoration of the computer's IP address. In addition, current

communication techniques prevent a service technician from communicating with more than one video display device at a time over a network.

Accordingly, there is a need for a system and method of communicating with one or more electronic appliances, such as a video display device, via a network where a service technician does not need extensive knowledge of networking environments.

SUMMARY OF THE INVENTION

In one embodiment of the present invention, a method for communicating with an electronic apparatus via a network is presented. The method comprises the steps of: receiving a communication comprising identification parameters associated with a computer, wherein the communication is compatible with a communication protocol of a first electronic apparatus; transmitting a request to establish communication with the computer associated with the received identification parameters, wherein the request is transmitted via a network; receiving a response to the request, wherein the response attempts to establish communication between the computer and the first electronic apparatus, wherein the response is transmitted via the network; and validating the response to the request to ensure that the computer to which the request to establish communication was transmitted is the computer associated with the received identification parameters. A system for implementing the described method is also disclosed.

In another embodiment of the present invention, a method for communicating with a media server for receiving media objects based on the properties of a display device is presented. The method determines the type of display technology used for a display device whereby the display device receives a media object that is optimized for visual playback for that display device. Display devices with different display technologies receive different media objects generated from the same source material.

BRIEF DESCRIPTION OF THE DRAWINGS

The present invention may be better understood in accordance with the following exemplary figures, in which:

FIG. 1 is a block diagram of a system for communicating with an electronic apparatus according to an exemplary embodiment of the present invention;

FIG. 2 is a block diagram of a personal computer (PC) for use with the present invention;

FIG. 3 is a block diagram of a control system of a video display device for use with the present invention;

FIG. 4 is a flowchart showing an operation of a system for communicating with a video display device according to an exemplary embodiment of the present invention; and

FIG. 5 is a flowchart showing an operation of a system for communicating with a video display device depending on the properties of the video display device according to an exemplary embodiment of the present invention.

DETAILED DESCRIPTION OF EXEMPLARY EMBODIMENTS

As used herein, the term "media object" includes audio, video, textual, multimedia data files, and streaming media files. Multimedia objects comprise any combination of text, image, video, and audio data. Streaming media comprises audio, video, multimedia, textual, and interactive data files that are delivered to a user via the Internet, satellite or other communications network environment and begin to play on the user's computer/ device before delivery of the entire file is completed. Media objects may be transmitted over any communications network including via the Internet, satellite (digital satellite system, digital video system-satellite), cable, digital subscriber line, T1 lines, wireless network, or other delivery systems capable of delivering media objects.

Examples of the content of media objects include songs, political speeches, news broadcasts, movie trailers, movies, television show broadcasts, radio broadcasts, financial conference calls, live concerts, web-cam footage, and other special events. Media objects are encoded in various formats including REALAUDIO®, REALVIDEO®, REALMEDIA®, APPLE QUICKTIME®, MICROSOFT WINDOWS® MEDIA FORMAT, QUICKTIME®, MPEG-2 (MOTION PICTURE EXPERTS GROUP) VIDEO COMPRESSION, MPEG-4 VIDEO AND/OR AUDIO COMPRESSION, JOINT VIDEO TEAM COMPRESSION FORMAT (MPEG-4 part 10 AVC, H.264), MPEG-2 LAYER III AUDIO, MP3®. Typically, media objects are designated with extensions (suffixes) indicating compatibility with specific formats. For example, media objects (e.g., audio and video files) ending in one of the extensions, .ram, .rm, .rpm, are compatible with the REALMEDIA® format. Some examples of file extensions and their compatible formats are listed in the Table 1. A more exhaustive list of media types, extensions and compatible formats may be found at http://www.bowers.cc/extensions2.htm.

Format	Extension
REALMEDIA®	.ram, .rm, .rpm
APPLE QUICKTIME®	.mov, .qif
MICROSOFT WINDOWS® MEDIA PLAYER	.wma, .cmr, .avi

MACROMEDIA FLASH	.swf, .swl
MPEG	.mpg, .mpa, .mp1, .mp2
MPEG-2 LAYER III Audio	.mp3, .m3a, .m3u

TABLE 1

The illustrated embodiments of the invention operate with media objects that contain video data for presenting a video presentation of "near to motion picture quality". Such media objects may be encoded in a variety of formats such as MPEG-2 (Motion Picture Standards Group Standard ISO/IEC 13818-1:2000) and ITU-T H.264/ MPEG AVC (ISO/IEC 14496-10), or may be uncompressed video. It is noted that the invention also operates with over the air broadcasted programming such as used for Advanced Television System (ATSC) or Digital Video Broadcasts (DVB) compliant video signals.

FIG. 1 is a block diagram of a system 100 for communicating with an electronic apparatus according to an exemplary embodiment of the present invention. As shown in FIG. 1, the system 100 includes, inter alia, a personal computer (PC) 110, electronic appliances, for example, video display devices 120a, b ... k, an infrared (IR) transmitter 140, and media server 170. The PC 110 and the video display devices 120a, b ... k, are connected together over a local area network (LAN) 130 via a pair of connection means 150, 160a, b ... k, and connection means 180.

The PC 110 may be a portable or laptop computer, a personal digital assistant (PDA), etc. that is capable of communicating with the video display devices 120a, b ... k using a communication protocol such as a factory defined or proprietary protocol that is capable of supporting a feature set of one of the video display devices 120a, b ... k. The video display devices 120a, b ... k may be digital video display device having enhanced-definition television (EDTV) and high-definition video television (HDTV) capabilities, and plasma, liquid crystal, organic light emitting, or cathode ray tube (CRT) displays, etc. The video display devices 120a, b ... k are also capable of communicating with a device such as the PC 110 and IR transmitter 140 via external interfaces, such as an interface menu at the video display devices 120a, b ... k, the connection means 150, 160a, b ... k or an infrared receiver. The IR transmitter 140 may be a common video display device remote control such as a universal remote control having infrared transmission capabilities. Video display devices 120a, b...k, are

also preferably capable of decoding received media objects using a media player application such as REALPLAYER or WINDOWS MEDIA PLAYER.

It is to be understood, that although the electronic apparatus of FIG. 1 is illustrated as one of several video display devices 120a, b ... k, the electronic apparatus can be any number of network devices such as satellite receiver, digital video disk (DVD) player, stereo equipment, etc., other personal computers, set top boxes, and which can be connected over a network and accessed via a client-server or peer to peer architecture.

The LAN 130 may use networking protocols such as Ethernet using a 10BaseT, 100BaseT or 1000BaseT standard, token ring, asynchronous transfer mode (ATM), etc. or any networking protocol that allows for automatic configuration and restoration of a video display device's internet protocol (IP) address. The connection means 150, 160a, b ... k, and connection means 180, may be a twisted pair cable capable of connecting the PC 110 and video display devices 120a, b ... k over, for example, an Ethernet network. The connection means 150, 160 a, b ... k, and connection means 180 may also be terminated with RJ-45 style Ethernet connectors, although other connectors may be used.

It is also contemplated that connection means 150 and 180 may be a connection to LAN 130 through the use of a network fabric, such as the Internet. The use the network fabric may be any type of network known in the art. Preferably, such a network is capable of accommodating multiple connections between resources at a server side of a server and at the client side of a client, such connections being UDP based, TCP/IP based, or a mixture of both. The bandwidth accommodated by network 150 is preferably a large bandwidth connection such as a T1 connection (1.5 Megabits per second, Mbps), T3 connection (45 Mbps), DS3 connection (45 Mbps), OC3 connection (155 Mbps), OC12 (248000 Mbps), and the like.

Media server 170 is a storage device such as a matrix of hard drives having a capacity of Terabytes and/or Gigabytes capable of storing multiple media objects. Media server 170 is also capable of delivering such media objects to display devices 120a...k through connection means 180 via LAN 130.

FIG. 2 is a block diagram of a PC 200 for use with the present invention. The PC 200 may be used in place of or in conjunction with the PC 110 of FIG. 1. The PC 200 includes a central processing unit (CPU) 210 and a memory 220 and, is connected to an input 230 and an output 240 via a data bus 250. The memory 220 includes a random access memory (RAM) 260 and a read only memory (ROM) 270. The memory 220 can also include a database, disk drive, tape drive, etc., or a combination thereof. The RAM 260 function as a data memory that stores data used during execution of a

program in the CPU 210 and is used as a work area. The ROM 270 functions as a program memory for storing a program executed in the CPU 210. The input 230 is constituted by a keyboard, mouse, connecting means, input device, etc. and the output 240 is constituted by a liquid crystal display (LCD), CRT display, printer, connecting means, etc.

It is to be understood that the CPU 210 and memory 220 include data associated with communicating via a number of communication protocols used by an electronic apparatus, for example, the video display devices 120a, b ... k of FIG. 1. The data associated with communicating with the video display devices 120a, b ...k includes, inter alia, identification parameters such as the PC's 200 IP address, port and password. Further, the PC 200 includes software stored in its memory 220 to provide service technicians with a method to diagnose and repair the video display devices 120a, b ...k. This software may be of the type commonly used by video display device service technicians such as, CHIPPER CHECK™ available from Thomson, to service and diagnose the problems of video display devices.

FIG. 3 is a block diagram of a control system of a video display device 300 for use with the present invention. The control system 300 includes, inter alia, a microprocessor (μP) 310, an electrically erasable programmable read only memory (EEPROM) 320 and output devices 340. The microprocessor 310, EEPROM 320 and output devices 340 communicate with each other via a data bus 350. An input 360 is connected to the microprocessor 310 and, a backend processor 330 is connected to the data bus 350.

The microprocessor 310 communicates with the output devices 340 such as light emitting diodes (LEDs), digital video interfaces (e.g., high definition multimedia interface (HDMI) 1394), infrared transmitters, etc. and the backend processor 330 to control a digital video display device such as one of the video display devices 120a, b ... k of FIG. 1. The microprocessor 310 also communicates with the backend processor 330 to perform backend processing such as video processing and, the backend processor 330 is also coupled to the output device 340 to control, for example, display parameters and to improve video quality. The microprocessor 310 also receives input 360 from a video display device's front panel, remote control, EEPROM 320 and any of the devices that are connected to the data bus 350. The EEPROM 320 stores values used by the microprocessor to control one of the video display devices 120a, b ... k. These values may include, for example, alignment information, initialization signals and customer information. Exemplary customer information may include a channel scan list, color, brightness and volume levels.

The EEPROM 320 includes information such as values associated with one of the video display devices 120a, b ... k that were stored in the EEPROM 320 when one of the video display devices 120a, b ... k were made. The EEPROM 320 also has the ability to have information written to it from an external device such as the PC 110 or IR transmitter 140. Thus, for example, the EEPROM 320 can store identification parameters written to it from the PC 110. These parameters may include the PC's 110 IP address and port, thereby allowing the PC 110 to communicate with one of the video display devices 120a, b ... k. Once the PC 110 is in communication with one of the video display devices 120a, b ... k, the PC's 110 service and testing software sends commands to one of the video display devices 120a, b ... k to perform a number of operations on one of the video display devices 120a, b ... k.

FIG. 4 is a flowchart showing an operation 400 of a system for communicating with a video display device according to an exemplary embodiment of the present invention. As shown in FIG. 4, a service technician transmits a communication to, for example, a video display device 120a of FIG. 1 (step 410). The communication is transmitted by, for example, the IR transmitter 140 of FIG. 1. It is to be understood that the communication may also be transmitted to the video display device 120a by accessing an interface menu on the video display device's 120a screen and inputting the communication. The communication includes parameters associated with identifying a PC, for example, PC 110 of FIG. 1 to the video display device 120a. These parameters include, inter alia, the PC's 110 IP address and port. It should be understood that the communication is transmitted via a factory defined protocol or a proprietary protocol that is compatible with the video display device 120a

After the communication has been transmitted, it is received by the video display device 120a (step 420). An infrared receiver located at the video display device 120a receives this communication. Upon receipt of the communication, the video display device 120a stores the identification parameters associated with the communication in a memory, such as the EEPROM 320 of FIG. 3 (step 430). This occurs, because the communication was transmitted via a protocol used by the video display device 120a that is considered safe to communicate with, thereby permitting data associated with the communication to be stored. Once the identification parameters, which include the PC's 110 IP address and port, are stored in the video display device's 120a memory, the video display device 120a transmits a signal to the PC 110 (on the port specified in the communication of step 410) in an effort to establish communication between the video display device 120a and the PC 110 (step 440). In other words, the video display device 120a is attempting to complete a handshake with the PC 110 by transmitting a message via a handshaking protocol telling the PC 110

that it has received the PC's 110 identification information and is ready to receive further communication from the PC 110.

Upon receipt of the video display device's 120a request to establish further communication, the PC 110 responds to the request by transmitting a communication indicating that it is the device with which the video display device 120a should be communicating (step 450), thereby completing the handshake. This handshake assures both the video display device 120a and the PC 110 that they are connected to each other and not an imposter or an unauthorized user and, is possible because the PC's 110 IP address and port were programmed into the memory of the video display device 120a by the service technician in step 410. It is to be understood that in this configuration the video display device 120a functions as a client and the PC 110 functions as a remote server in client-server software architecture.

After a secure communication channel between the video display device 120a and the PC 110 is established, the PC 110 may then communicate with the video display device 120a to perform a desired function on the video display device related to, for example, servicing or testing (step 460). The function to be performed may be one of a color, geometry, video, stereo or picture-in-picture (PIP) alignment, or an adjustment to various calibration values associated with picture quality, etc.

In an alternative embodiment of the present invention, the PC 110 of FIG. 1 can communicate with more than one electronic apparatuses, such as the video display devices 120a, b ... k. This is accomplished by transmitting the PC's 110 IP address and port to, for example, the video display device 120b, when the PC 110 is already in communication with the video display device 120a (by performing the same or similar process as described above in steps 410-450 of FIG. 4). In order to accomplish this, the PC 110 assigns a different port to the video display device 120b. Once the steps 410-450 are completed the PC 110 may then begin to perform a desired function on the video display device 120b, while still performing desired functions on the video display device 120a. When performing functions on more than one video display device, the PC 110 can have separate windows for each video display device on an output such as an LCD display.

It is to be further understood that the PC's 110 IP address and port (for video display device 120b) can be transmitted to the video display device 120b at the same time the PC 110 IP address and port (for video display device 120a) are transmitted to the video display device 120a. Thereby, enabling a service technician to connect and then communicate with more than one video display device simultaneously.

By communicating with more than one video display device the PC 110 offers flexibility to a service technician, because they are not limited to performing functions

on one video display device at a time. In addition, by having control of more than one video display device or electronic apparatus a service technician and/or authorized user of the present invention may for example, simultaneously turn multiple video display devices off or on, change channels, volume, etc. or view, for example, the same movie on several DVD players.

In an alternative variant of the present invention a computer's identification information may be transmitted wirelessly from a transmitter using Bluetooth, Institute of Electrical and Electronics Engineers (IEEE) 802.11 or Infrared Data Association (IrDA) wireless transmission technologies.

FIG. 5 is a flowchart disclosing a method 500 for communicating with a video display device to receive a media object depending on the properties of the video display device. Specifically, it is recognized that with the development of video display device technologies such as OLED, plasma, LCD, and the like, there may be variances in the rendering of media service on a display device. For example, a media service encoded with MPEG-2 video codec may be of a motion picture quality when displayed on a Cathode Ray Tube (CRT) display device but may be blurred when rendered on an OLED display device.

The cause for the problem given in the example above pertains to encoding methodology used for encoding a media service. Typically, encoders use compression techniques that reduce the size of encoded media object from the original source material. For example, an MPEG-2 based encoder accomplishes a 40 to 50:1 type of compression when used to encode video based source material. Part of the compression takes advantage of techniques known as psychometric functions that are related to how human beings perceive media objects visually and aurally, where a percentage of data can be eliminated from source material without a human perceiving the loss of such data. The development of MPEG-2 and other encoding techniques are developed with humans being tested to determine what visual or audio information needs to be kept and what can eliminated from source material, see ITU Recommendation BT.500-8, "Methodology for Subjective Assessment of the Quality of Television Pictures," 1998, for background about testing human visual perception.

Additionally with the development of new display technologies, a human may be able to notice artifacts due to an encoding technique selected (for example, on an OLED display device) that would not be as apparent on a second display device (a CRT display). Continuing with the present example, it may be the case that a human would notice artifacts of the macroblocks used for MPEG-2 encoded video on an OLED display device that would not be apparent to a human on the CRT. This may due to the underlying physical properties of the display device technology used to render a video

image. Hence, the screen refresh techniques for the CRT may be better at hiding such artifacts of MPEG-2 than the screen refresh techniques for an OLED display device.

Recognizing these deficiencies of human perception, the present invention discloses architecture for delivering media objects in an encoding format optimized for display device used to render such media object. For an illustrative embodiment of the present invention by referring to FIG. 1, video display device 120a represents a CRT based video display device and video display device 120b is an OLED display device. Both display devices are connected to media server 170 through a connection means 180.

In step 510, display device 120a requests a media object from media server 170. For example, the request for a media object is for a movie that is delivered through a video on demand system or a media object delivered as streaming media through the Internet. Media server 170 receives this request, in step 520, and determines the capabilities of display device 120a. In the preferred embodiment of the invention, display device 120a transmits identification parameters as part of device parameters that identify the display device technology used for that device when rendering a media service. For example, the display device 120a transmits metadata identifying the display device as a CRT based television. Table II presents an exemplary embodiment of a metadata field DISPLAYDEVICE and corresponding values that may be used to identify a display device technology using an Extensible Markup Language format. For example, metadata received as <DISPLAYDEVICE> CRT </DISPLAYDEVICE> represents a CRT based display device technology. Other metadata formats may be used, in accordance with the principles of the present invention.

DISPLAY TECHNOLOGY	VALUE
Cathode Ray Tube	CRT
Organic Light Emitting Diode	OLE
Liquid Crystal Display	LCD
Liquid Crystal on Silicon	LCO
Digital Light Projector	DLP
Plasma	PLA

TABLE 2

Alternatively, based on the request by display device 120a for a media object, the IP and/or port address of display device 120a is transmitted as part of the request. Media server 170 preferably has a database that contains information that identifies the technology used for identifying the display device by the IP address and/or port address information that is part of the request. This information could be entered in by a user and stored by media server 170 when registering the display device through a network connection.

Step 530 presents an optional step where display device 120a communicates identification parameters to media server 170. This communication is typically in response to a query made by media server 170 requesting the display technology used for the display device. Preferably, this communication of identification parameters is similar to the metadata presented in TABLE 2, although other formats of identification parameters may be used.

In response to the identification parameters received by media server 170, in step 540 the media server communicates a media object to video display 120a that corresponds to the display technology used for the display device. In the preferred embodiment, media server 170 utilizes a lookup table or database entry that designates a display technology to an encoding technique that has been predefined as producing an optimal video image for the display device technology. For example, for a CRT it may be determined that MPEG-2 encoded media object produces an optimal video presentation compared to an OLED display where a Windows Media 9 encoded media object may produce the optimal video presentation. Any encoding format may be selected, in accordance with the determinations made by the operator of media server 170. These determinations may change as new encoding techniques are created as with further improvements in display device technologies.

In the preferred embodiment, media server 170 stores multiple versions of the same source material as media objects encoded in different formats. In the present example, media server 170 would store the source material of a movie as a media object encoded in MPEG-2 format and a media object encoded in Windows Media 9 format. Alternatively, media server 170 would encode the source material of a media object into the appropriate format in real time or in close to real time using an encoder, in accordance with the designated encoding format for a display technology as described above.

Media server 170 then transmits the MPEG-2 encoded media object to display device 120a that is designated as a CRT, for this example. The media object is transmitted through connection means 180 and LAN 130 to display device 120a. If

display device 120b requests the same movie, media server 170 would transmit the Windows Media 9 encoded media object to the OLED based display device, as specified above. Other encoding formats and display devices are to be considered in accordance with the principles of the present invention.

In addition, for each format of a media object, visual attributes of the source material used to generate a media object are to be modified as to produce an optimal video picture for a specific display technology. Visual attributes to be modified include color, tint, contrast, hue, saturation, brightness, frame rate, lines per field, pixels, and the like. The visual attributes are selected and modified in accordance with experimentally determined parameters for providing the optimal viewing video on a display device for a particular technology.

In step 550, the display device receiving the media object renders the object as video. In the present example, each display device has a decoder capable of decoding a received media service. Hence, display device 120a has an MPEG-2 video decoder and display device 120b has a Windows Media 9 video decoder. The decoder or decoders for a display device are to be selected in accordance with the format of the media objects to be decoded by the display device.

In an alternative embodiment of the present invention, sub-channels or "minor" channels of a multi-casted digital broadcast may be used to transmit multiple versions of a media object as used for an ATSC or DVB based television system. Specifically, a sub-channel for a digital broadcast system may be designated to carry programs for a display device of a first technology and utilize a second sub-channel to carry programs for a display device of a second technology, where the media object is generated from the same source material. For example, a program transmitted on a first sub-channel may have the gamma values of the color of the programming be modified for display on a plasma device compared to a program carried on a second sub-channel where the programming would be color corrected for display on a LCD screen. Other attributes of programming may be modified in accordance with the principles of the present invention.

It is to be understood that the present invention may be implemented in various forms of hardware, software, firmware, special purpose processors, or a combination thereof. In one embodiment, the present invention may be implemented in software as an application program tangibly embodied on a program storage device. The application program may be uploaded to, and executed by, a machine comprising any suitable architecture.

It is to be further understood that, because some of the constituent system components and method steps depicted in the accompanying figures may be

implemented in software, the actual connections between the system components (or the process steps) may differ depending on the manner in which the present invention is programmed. Given the teachings of the present invention provided herein, one of ordinary skill in the art will be able to contemplate these and similar implementations or configurations of the present invention.

CLAIMS

What is claimed is:

1. A method for communicating with an electronic apparatus via a network, the method comprising:

receiving a communication (420) comprising identification parameters associated with a computer, wherein the communication is compatible with a communication protocol of a first electronic apparatus;

transmitting a request (440) to establish communication with the computer associated with the received identification parameters, wherein the request is transmitted via a network;

receiving a response to the request, wherein the response attempts to establish communication between the computer and the first electronic apparatus, wherein the response is transmitted via the network; and

validating the response (450) to the request to ensure that the computer to which the request to establish communication was transmitted is the computer associated with the received identification parameters.

2. The method of claim 1, wherein the request to establish communication between the computer and the first electronic apparatus is transmitted from the first electronic apparatus with which the communication is desired.

3. The method of claim 1, wherein the first electronic apparatus uses a factory defined communication protocol.

4. The method of claim 1, wherein the identification parameters associated with the computer comprise an IP address and port of the computer.

5. The method of claim 1, further comprising:

storing the identification parameters (430) associated with the computer in a memory of the first electronic apparatus.

6. The method of claim 1, further comprising:

receiving a command from the computer (460), wherein the command is associated with performing a desired function on the first electronic apparatus.

7. The method of claim 6, wherein the desired function is associated with one of servicing, testing and controlling the first electronic apparatus.

8. The method of claim 1, wherein the network is an Ethernet network.

9. The method of claim 1, further comprising:

receiving a communication comprising identification parameters associated with the computer, wherein the communication is compatible with a communication protocol of a second electronic apparatus;

transmitting a request to establish communication with the computer associated with the received identification parameters, wherein the request is transmitted via the network;

receiving a response to the request, wherein the response attempts to establish communication between the computer and the second electronic apparatus, wherein the response is transmitted via the network; and

validating the response to the request to ensure that the computer to which the request to establish communication was transmitted is the computer associated with the received identification parameters.

10. The method of claim 9, further comprising:

receiving a command from the computer, wherein the command is associated with performing a desired function on the second electronic apparatus.

11. A method for communicating with an electronic apparatus via a network, the method comprising:

transmitting a communication (410) comprising identification parameters associated with a computer to a first electronic apparatus, wherein the communication is compatible with a communication protocol of the first electronic apparatus;

receiving a request to establish communication with the first electronic apparatus, wherein the request is transmitted via a network; and

transmitting a response to the request, wherein the response attempts to establish communication between the computer and the first electronic apparatus, wherein the response is transmitted via the network.

12. The method of claim 11, wherein the communication comprising identification parameters associated with the computer uses a proprietary protocol used by the first electronic apparatus.

13. The method of claim 11, wherein the identification parameters comprise an IP address and port of the computer.

14. The method of claim 11, further comprising:

transmitting a command to the first electronic apparatus, wherein the command is associated with performing a desired function on the first electronic apparatus.

15. The method of claim 14, wherein the desired function is associated with one of servicing, testing and controlling the first electronic apparatus.

16. The method of claim 11, wherein the network is an Ethernet network.

17. The method of claim 11, further comprising:

transmitting a communication comprising identification parameters associated with the computer to a second electronic apparatus, wherein the communication is compatible with a communication protocol of the second electronic apparatus;

receiving a request to establish communication with the second electronic apparatus, wherein the request is transmitted via the network; and

transmitting a response to the request, wherein the response attempts to establish communication between the computer and the second electronic apparatus, wherein the response is transmitted via the network.

18. The method of claim 17, further comprising:

transmitting a command to the second electronic apparatus, wherein the command is associated with performing a desired function on the second electronic apparatus.

19. A system (100) for communicating with an electronic apparatus via a network, the system comprising:

a first device (140) for transmitting a communication comprising identification parameters associated with a second device (110), wherein the communication is compatible with a communication protocol of a first electronic apparatus (120a, b ... k);

a first electronic apparatus for communicating with the second device, wherein first electronic apparatus comprises a first interface for wirelessly communicating with the first device and a second interface for communicating with the second device via a network (130); and

a second device for communicating with the first electronic apparatus, wherein the second device communicates with the first electronic apparatus via the network.

20. The system of claim 19, wherein the first device is an infrared transmitter.

21. The system of claim 19, wherein the identification parameters transmitted by the first device comprise an internet protocol (IP) address and port associated with the second device.

22. The system of claim 19, wherein the second device is a computer.

23. The system of claim 19, wherein the first electronic apparatus is a video display device.

24. The system of claim 19, wherein the network is an Ethernet network.

25. The system of claim 19, wherein the first interface of the first electronic apparatus decodes an infrared signal.

26. The system of claim 19, wherein the first electronic apparatus further comprises:

a memory for storing the identification parameters associated with the second device.

27. The system of claim 19, wherein the second interface is an Ethernet connector.

28. The system of claim 19, wherein the first electronic apparatus executes commands transmitted by the second device that are associated with performing a desired function on the first electronic apparatus.

29. The system of claim 19, wherein the first and second devices use a proprietary protocol compatible with the first electronic apparatus.

30. The system of claim 19, further comprising:

a second electronic apparatus for communicating with the second device via the network after the first electronic apparatus has established communication with the second device.

31. The system of claim 30, wherein the second electronic apparatus is a video display device.

32. A computer program product comprising a computer useable medium having computer program logic recorded thereon for communicating with an electronic apparatus via a network, the computer program logic comprising:

program code for receiving a communication comprising identification parameters associated with a computer, wherein the communication is compatible with a communication protocol of an electronic apparatus;

program code for transmitting a request to establish communication with the computer associated with the received identification parameters, wherein the request is transmitted via a network;

program code for receiving a response to the request, wherein the response attempts to establish communication between the computer and the electronic apparatus, wherein the response is transmitted via the network; and

program code for validating the response to the request to ensure that the computer to which the request to establish communication was transmitted is the computer associated with the received identification parameters.

33. A computer program product comprising a computer useable medium having computer program logic recorded thereon for communicating with an electronic apparatus via a network, the computer program logic comprising:

program code for transmitting a communication comprising identification parameters associated with a computer to an electronic apparatus, wherein the communication is compatible with a communication protocol of the electronic apparatus;

program code for receiving a request to establish communication with the electronic apparatus, wherein the request is transmitted via a network; and

program code for transmitting a response to the request, wherein the response attempts to establish communication between the computer and the electronic apparatus, wherein the response is transmitted via the network.

34. A system (100) for communicating with a video display device via an Ethernet network, the system comprising:

an infrared transmitter (140) for wirelessly transmitting an infrared signal to a video display device (120a, b ... k) via a communication protocol used by the video

display device, wherein the infrared signal comprises an internet protocol (IP) address and port associated with a computer (110);

a video display device for receiving the infrared signal and for communicating with the computer via an Ethernet network (130), wherein the video display device comprises an infrared receiver for receiving the infrared signal and an Ethernet connector for connecting to the Ethernet network; and

a computer for performing a desired function on the video display device, wherein the computer comprises an Ethernet connector for connecting to the Ethernet network and an input means for inputting the desired function to be performed on the video display device.

35. A method for receiving a media object corresponding to a display technology used for a display device comprising the steps of:

determining a device display parameter (120a, b ...k) related to the display technology used for the display device;

communicating said parameter (130); and

receiving the media object (120a, b ...k), wherein the media object corresponds to the display technology used for the display device.

36. The method of claim 35, wherein said parameter indicates the display technology used is at least one of: a cathode ray tube, organic light emitting diode, liquid crystal display, liquid crystal on silicon, digital light project, and plasma.

37. The method of claim 36, wherein said media object is encoded in a format optimized for a display technology.

38. The method of claim 37, wherein the media object has a visual attribute modified for said display technology, wherein said visual attribute is changed when said media object is to be displayed on a display device using a different display technology.

39. The method of claim 38, wherein said media object is transmitted on a sub-channel of a digital television broadcast system and the changed media object is transmitted on a different sub-channel.

40. A method for transmitting a media object corresponding to a display technology used for a display device comprising the steps of:

determining a device display parameter related to the display technology used for the display device (120a, b ...k), wherein the parameter is received (170) as part of a request for the media object from the display device (120a, b ...k) ; and

transmitting the media object to the display device (170), wherein the media object corresponds to the display technology used for the display device (120a, b ...k).

41. The method of claim 40, wherein said parameter indicates the display technology used is at least one of: a cathode ray tube, organic light emitting diode, liquid crystal display, liquid crystal on silicon, digital light project, and plasma.

42. The method of claim 41, wherein said media object is encoded in a format optimized for a display technology.

43. The method of claim 42, wherein the media object has a visual attribute modified for said display technology, wherein said visual attribute is changed when said media object is to be displayed on a display device using a different display technology.

44. The method of claim 43, wherein said media object is transmitted on a sub-channel of a digital television broadcast system and said changed media object is transmitted on a different sub-channel.

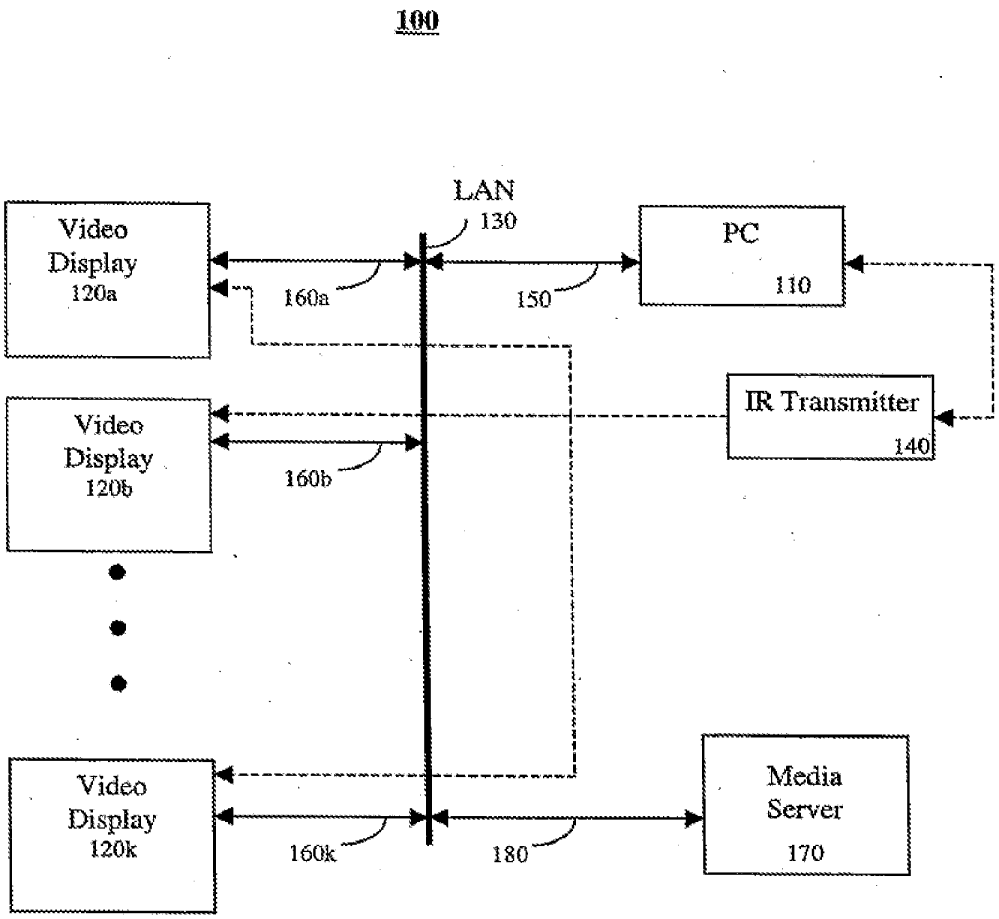
100
LAN
130
Video
Display
120a
160a
150
PC
110
IR Transmitter
140
Video
Display
120b
160b
Video
Display
120k
160k
180
Media
Server
170

FIG. 1

200

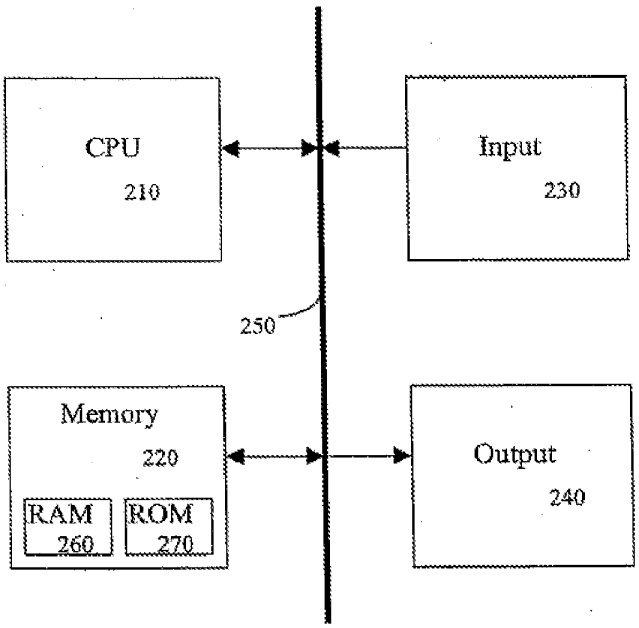

FIG. 2

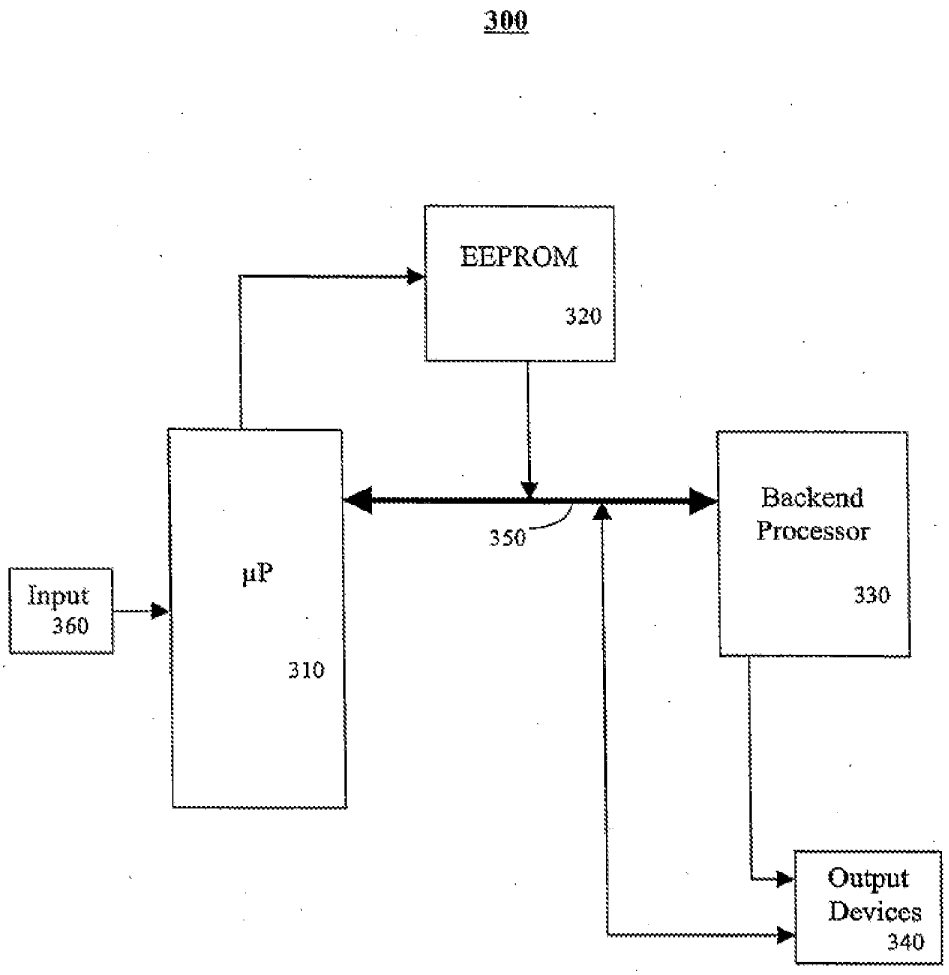
300
EEPROM
320
Backend
Processor
330
350
µP
310
Input
360
Output
Devices
340

FIG. 3

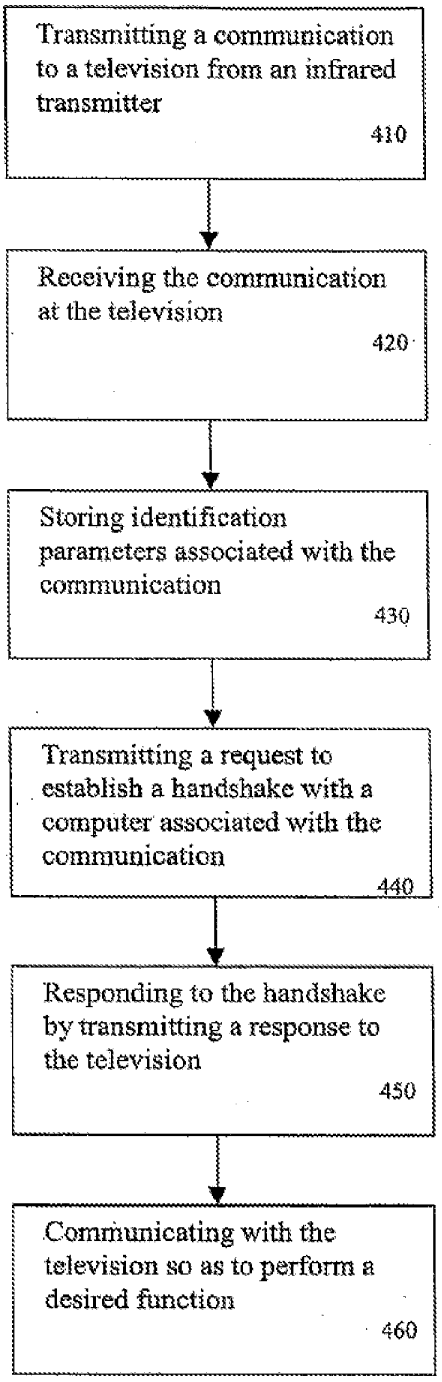
Transmitting a communication to a television from an infrared transmitter
410
Receiving the communication at the television
420
Storing identification parameters associated with the communication
430
Transmitting a request to establish a handshake with a computer associated with the communication
440
Responding to the handshake by transmitting a response to the television
450
Communicating with the television so as to perform a desired function
460

FIG. 4

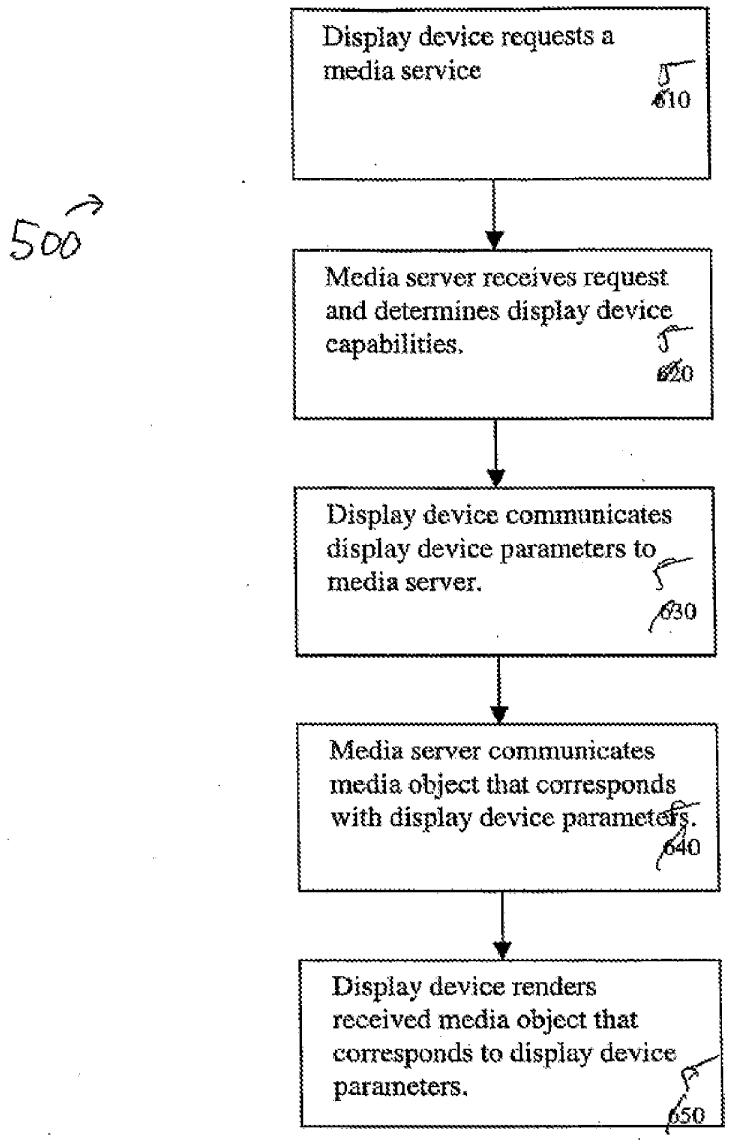
500
Display device requests a media service
610
Media server receives request and determines display device capabilities.
620
Display device communicates display device parameters to media server.
630
Media server communicates media object that corresponds with display device parameters.
640
Display device renders received media object that corresponds to display device parameters.
650

FIG. 5

(12) INTERNATIONAL APPLICATION PUBLISHED UNDER THE PATENT COOPERATION TREATY (PCT)

(19) World Intellectual Property Organization
International Bureau

(43) International Publication Date
18 November 2004 (18.11.2004)

PCT

(10) International Publication Number
WO 2004/100500 A3

(51) International Patent Classification[7]: H04L 12/28, H04B 1/20, H04L 29/06

(21) International Application Number: PCT/US2004/013859

(22) International Filing Date: 4 May 2004 (04.05.2004)

(25) Filing Language: English

(26) Publication Language: English

(30) Priority Data:
60/467,928 5 May 2003 (05.05.2003) US

(71) Applicant (*for all designated States except US*): THOMSON LICENSING S.A. [FR/FR]; 46, Quai A. Le Gallo, F-92648 Boulogne (FR).

(72) Inventors; and
(75) Inventors/Applicants (*for US only*): GRIMES, Kevin, Lloyd [US/US]; 12427 Haydon Court, Fishers, IN 46038 (US). BURNETT, Angela, Renee [US/US]; 6821 Bretton Wood Drive, Indianapolis, IN 46268 (US).

(74) Agents: TRIPOLI, Joseph, S. et al.; c/o Thomson Licensing Inc., 2 Independence Way, Suite 200, Princeton, NJ 08540 (US).

(81) Designated States (*unless otherwise indicated, for every kind of national protection available*): AE, AG, AL, AM, AT, AU, AZ, BA, BB, BG, BR, BW, BY, BZ, CA, CH, CN, CO, CR, CU, CZ, DE, DK, DM, DZ, EC, EE, EG, ES, FI, GB, GD, GE, GH, GM, HR, HU, ID, IL, IN, IS, JP, KE, KG, KP, KR, KZ, LC, LK, LR, LS, LT, LU, LV, MA, MD, MG, MK, MN, MW, MX, MZ, NA, NI, NO, NZ, OM, PG, PH, PL, PT, RO, RU, SC, SD, SE, SG, SK, SL, SY, TJ, TM, TN, TR, TT, TZ, UA, UG, US, UZ, VC, VN, YU, ZA, ZM, ZW.

(84) Designated States (*unless otherwise indicated, for every kind of regional protection available*): ARIPO (BW, GH, GM, KE, LS, MW, MZ, NA, SD, SL, SZ, TZ, UG, ZM, ZW), Eurasian (AM, AZ, BY, KG, KZ, MD, RU, TJ, TM), European (AT, BE, BG, CH, CY, CZ, DE, DK, EE, ES, FI, FR, GB, GR, HU, IE, IT, LU, MC, NL, PL, PT, RO, SE, SI, SK, TR), OAPI (BF, BJ, CF, CG, CI, CM, GA, GN, GQ, GW, ML, MR, NE, SN, TD, TG).

[Continued on next page]

(54) Title: SYSTEM AND METHOD FOR COMMUNICATING WITH A DISPLAY DEVICE VIA A NETWORK

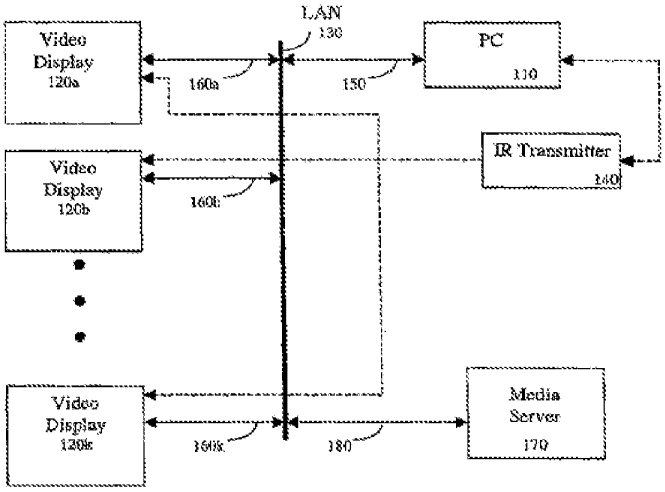

(57) Abstract: A system (100) and corresponding methods are provided for enabling communication with an electronic apparatus via a network. The system comprises: a first device (140) for transmitting a communication comprising identification parameters associated with a second device (110), wherein the communication is compatible with a communication protocol of a first electronic apparatus (120a, b ...k); a first electronic apparatus for communicating with the second device, wherein first electronic apparatus comprises a first interface for wirelessly communicating with the first device and a second interface for communicating with the second device via a network (130); and a second device for communicating with the first electronic apparatus, with the second device communicating the first electronic apparatus via the network.

WO 2004/100500 A3

Published:

— *with international search report*

— *before the expiration of the time limit for amending the claims and to be republished in the event of receipt of amendments*

(88) Date of publication of the international search report:
28 April 2005

For two-letter codes and other abbreviations, refer to the "Guidance Notes on Codes and Abbreviations" appearing at the beginning of each regular issue of the PCT Gazette.

INTERNATIONAL SEARCH REPORT

Inte onal Application No
PCT/US2004/013859

A. CLASSIFICATION OF SUBJECT MATTER
IPC 7 H04L12/28 H04B1/20 H04L29/06

According to International Patent Classification (IPC) or to both national classification and IPC

B. FIELDS SEARCHED

Minimum documentation searched (classification system followed by classification symbols)
IPC 7 H04L H04B

Documentation searched other than minimum documentation to the extent that such documents are included in the fields searched

Electronic data base consulted during the international search (name of data base and, where practical, search terms used)

EPO-Internal

C. DOCUMENTS CONSIDERED TO BE RELEVANT

Category *	Citation of document, with indication, where appropriate, of the relevant passages	Relevant to claim No.
A	WO 97/18636 A (MIZUNO YOSHIRO ; WEBTRONICS INC (US)) 22 May 1997 (1997-05-22) the whole document	1-34
X	US 2003/043740 A1 (MARCH SEAN W ET AL) 6 March 2003 (2003-03-06)	1-18,32, 33
A	abstract; figures 3,8 paragraphs '0005!, '0006!, '0022!, '0028!, '0036! - '0091!, '0104!, '0106!	19-31,34
X	WO 97/40610 A (NORTHERN TELECOM LTD) 30 October 1997 (1997-10-30)	1-18,32, 33
A	page 5, line 18 - page 6, line 12	19-31,34

-/--

[X] Further documents are listed in the continuation of box C.

[X] Patent family members are listed in annex.

* Special categories of cited documents :

"A" document defining the general state of the art which is not considered to be of particular relevance

"E" earlier document but published on or after the international filing date

"L" document which may throw doubts on priority claim(s) or which is cited to establish the publication date of another citation or other special reason (as specified)

"O" document referring to an oral disclosure, use, exhibition or other means

"P" document published prior to the international filing date but later than the priority date claimed

"T" later document published after the international filing date or priority date and not in conflict with the application but cited to understand the principle or theory underlying the invention

"X" document of particular relevance; the claimed invention cannot be considered novel or cannot be considered to involve an inventive step when the document is taken alone

"Y" document of particular relevance; the claimed invention cannot be considered to involve an inventive step when the document is combined with one or more other such documents, such combination being obvious to a person skilled in the art.

"&" document member of the same patent family

Date of the actual completion of the international search	Date of mailing of the international search report
2 February 2005	21 02 2005

Name and mailing address of the ISA	Authorized officer
European Patent Office, P.B. 5818 Patentlaan 2 NL - 2280 HV Rijswijk Tel. (+31-70) 340-2040, Tx. 31 651 epo nl, Fax: (+31-70) 340-3016	Lievens, K

Form PCT/ISA/210 (second sheet) (January 2004)

INTERNATIONAL SEARCH REPORT

Inte onal Application No
PCT/US2004/013859

C.(Continuation) DOCUMENTS CONSIDERED TO BE RELEVANT

Category °	Citation of document, with indication, where appropriate, of the relevant passages	Relevant to claim No.
X	US 5 109 222 A (WELTY JOHN) 28 April 1992 (1992-04-28)	19-31
A	abstract; figure 5 column 2, line 30 - column 4, line 55	1-18, 32-34
A	WO 00/39772 A (KONINKL PHILIPS ELECTRONICS NV) 6 July 2000 (2000-07-06) the whole document	1-34
A	WO 00/16531 A (SONY ELECTRONICS INC) 23 March 2000 (2000-03-23) the whole document	1-34
X	US 2003/046691 A1 (NAKAGAWA TOSHIYUKI) 6 March 2003 (2003-03-06) abstract paragraph '0002! - paragraph '0023! paragraph '0045! - paragraph '0048!	35-38, 40-43
Y	paragraph '0080! - paragraph '0123!	39,44
X	WO 02/097584 A2 (HYPERSPACE COMMUNICATIONS, INC) 5 December 2002 (2002-12-05) abstract paragraph '0017! - paragraph '0023! paragraph '0026! - paragraph '0036! paragraph '0043! - paragraph '0046!	35-38, 40-43
X	EP 1 263 233 A (MATSUSHITA ELECTRIC INDUSTRIAL CO., LTD) 4 December 2002 (2002-12-04) abstract paragraph '0003! - paragraph '0011! paragraph '0041!	35-38, 40-43
Y	US 2002/120931 A1 (HUBER THOMAS ET AL) 29 August 2002 (2002-08-29) abstract paragraph '0006! - paragraph '0020! paragraph '0035! - paragraph '0047! paragraph '0054! figures 1,5	39,44

Form PCT/ISA/210 (continuation of second sheet) (January 2004)

INTERNATIONAL SEARCH REPORT

International application No.
PCT/US2004/013859

Box II Observations where certain claims were found unsearchable (Continuation of item 2 of first sheet)

This International Search Report has not been established in respect of certain claims under Article 17(2)(a) for the following reasons:

1. [ ] Claims Nos.:
because they relate to subject matter not required to be searched by this Authority, namely:

2. [ ] Claims Nos.:
because they relate to parts of the International Application that do not comply with the prescribed requirements to such an extent that no meaningful International Search can be carried out, specifically:

3. [ ] Claims Nos.:
because they are dependent claims and are not drafted in accordance with the second and third sentences of Rule 6.4(a).

Box III Observations where unity of invention is lacking (Continuation of item 3 of first sheet)

This International Searching Authority found multiple inventions in this international application, as follows:

see additional sheet

1. [X] As all required additional search fees were timely paid by the applicant, this International Search Report covers all searchable claims.

2. [ ] As all searchable claims could be searched without effort justifying an additional fee, this Authority did not invite payment of any additional fee.

3. [ ] As only some of the required additional search fees were timely paid by the applicant, this International Search Report covers only those claims for which fees were paid, specifically claims Nos.:

4. [ ] No required additional search fees were timely paid by the applicant. Consequently, this International Search Report is restricted to the invention first mentioned in the claims; it is covered by claims Nos.:

Remark on Protest

[ ] The additional search fees were accompanied by the applicant's protest.

[ ] No protest accompanied the payment of additional search fees.

FURTHER INFORMATION CONTINUED FROM PCT/ISA/ 210

This International Searching Authority found multiple (groups of) inventions in this international application, as follows:

1. claims: 1-34

   Method and system for establish a communication

2. claims: 35-44

   Method for transmision of media objects based on the properties of a display device

INTERNATIONAL SEARCH REPORT

Information on patent family members

Inte onal Application No
PCT/US2004/013859

Patent document cited in search report		Publication date	Patent family member(s)			Publication date
WO 9718636	A	22-05-1997	AU	7706596	A	05-06-1997
			WO	9718636	A2	22-05-1997
US 2003043740	A1	06-03-2003	EP	1430682	A2	23-06-2004
			WO	02103982	A2	27-12-2002
WO 9740610	A	30-10-1997	AU	707905	B2	22-07-1999
			AU	2563297	A	12-11-1997
			CA	2248577	A1	30-10-1997
			WO	9740610	A2	30-10-1997
			CN	1216657	A	12-05-1999
			DE	69708281	D1	20-12-2001
			DE	69708281	T2	16-05-2002
			EP	0895684	A2	10-02-1999
			JP	11508753	T	27-07-1999
			KR	2000010612	A	25-02-2000
			US	6128298	A	03-10-2000
US 5109222	A	28-04-1992	NONE			
WO 0039772	A	06-07-2000	CN	1298530	T	06-06-2001
			WO	0039772	A1	06-07-2000
			EP	1058921	A1	13-12-2000
			JP	2002534038	T	08-10-2002
WO 0016531	A	23-03-2000	US	6237049	B1	22-05-2001
			AT	280463	T	15-11-2004
			AU	5579999	A	03-04-2000
			CA	2340902	A1	23-03-2000
			DE	69921342	D1	25-11-2004
			EP	1112650	A1	04-07-2001
			JP	2002525732	T	13-08-2002
			WO	0016531	A1	23-03-2000
US 2003046691	A1	06-03-2003	JP	2003153254	A	23-05-2003
WO 02097584	A2	05-12-2002	NONE			
EP 1263233	A	04-12-2002	CN	1389785	A	08-01-2003
			EP	1263233	A2	04-12-2002
			JP	2003091648	A	28-03-2003
			US	2002184223	A1	05-12-2002
US 2002120931	A1	29-08-2002	CA	2438620	A1	29-08-2002
			EP	1364533	A1	26-11-2003
			WO	02067587	A1	29-08-2002

(12) INTERNATIONAL APPLICATION PUBLISHED UNDER THE PATENT COOPERATION TREATY (PCT)

(19) World Intellectual Property Organization
International Bureau

(43) International Publication Date
12 June 2008 (12.06.2008)

PCT

(10) International Publication Number
WO 2008/070050 A2

(51) International Patent Classification: Not classified

(21) International Application Number: PCT/US2007/024791

(22) International Filing Date: 4 December 2007 (04.12.2007)

(25) Filing Language: English

(26) Publication Language: English

(30) Priority Data:
60/868,446 4 December 2006 (04.12.2006) US

(71) Applicant *(for all designated States except US)*: **SWARMCAST, INC.** [US/US]; 212 2nd St. SE, Suite 128, Minneapolis, MN 55414 (US).

(72) Inventors; and

(75) Inventors/Applicants *(for US only)*: **CHAPWESKE, Justin, F.** [US/US]; 1668 Roschill Circle, Lauderdale, MN 55108 (US). **MCKINLEY, Christopher** [US/US]; 3329 17th Ave. S. Apt. 2, Minneapolis, MN 55407 (US).

(74) Agent: **SIEFFERT, Kent, J.**; Shumaker & Sieffert, P.A., 1625 Radio Drive, Suite 300, Woodbury, MN 55125 (US).

(81) Designated States *(unless otherwise indicated, for every kind of national protection available)*: AE, AG, AL, AM, AT, AU, AZ, BA, BB, BG, BH, BR, BW, BY, BZ, CA, CH, CN, CO, CR, CU, CZ, DE, DK, DM, DO, DZ, EC, EE, EG, ES, FI, GB, GD, GE, GH, GM, GT, HN, HR, HU, ID, IL, IN, IS, JP, KE, KG, KM, KN, KP, KR, KZ, LA, LC, LK, LR, LS, LT, LU, LY, MA, MD, ME, MG, MK, MN, MW, MX, MY, MZ, NA, NG, NI, NO, NZ, OM, PG, PH, PL, PT, RO, RS, RU, SC, SD, SE, SG, SK, SL, SM, SV, SY, TJ, TM, TN, TR, TT, TZ, UA, UG, US, UZ, VC, VN, ZA, ZM, ZW.

(84) Designated States *(unless otherwise indicated, for every kind of regional protection available)*: ARIPO (BW, GH, GM, KE, LS, MW, MZ, NA, SD, SL, SZ, TZ, UG, ZM, ZW), Eurasian (AM, AZ, BY, KG, KZ, MD, RU, TJ, TM), European (AT, BE, BG, CH, CY, CZ, DE, DK, EE, ES, FI, FR, GB, GR, HU, IE, IS, IT, LT, LU, LV, MC, MT, NL, PL, PT, RO, SE, SI, SK, TR), OAPI (BF, BJ, CF, CG, CI, CM, GA, GN, GQ, GW, ML, MR, NE, SN, TD, TG).

[Continued on next page]

(54) Title: AUTOMATIC CONFIGURATION OF EMBEDDED MEDIA PLAYER

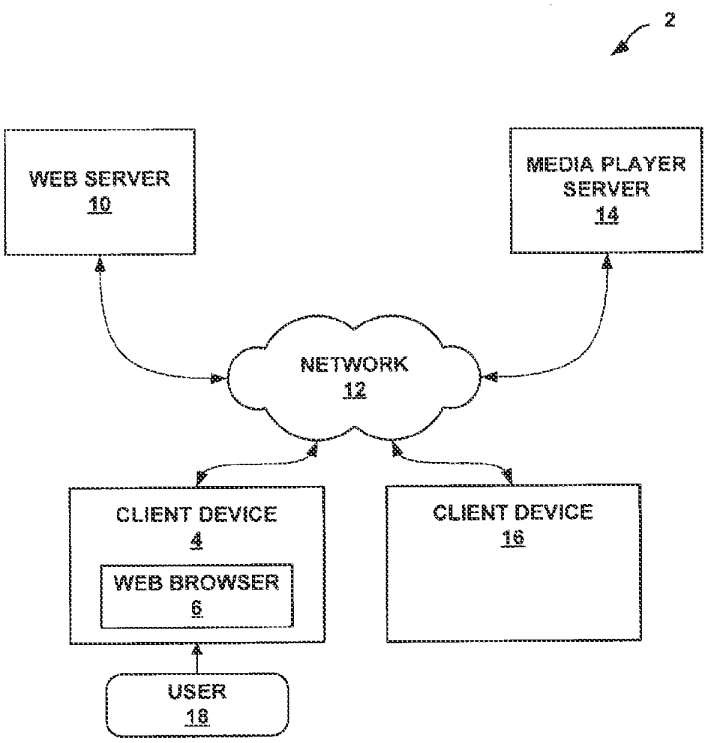

(57) Abstract: In general, techniques are described of automatically configuring an embedded media player. For example, a user interface such as a web page or a user interface of a media player may include an embedded media file that is to be presented. In addition, the user interface may display an input mechanism that offers a user the opportunity to present a higher-quality version of the media file. When a client device receives the user interface and a user interacts with the input mechanism, a specialized media player is automatically downloaded to the client device. The specialized media player then automatically downloads a higher-quality version of the media file and begins playing the higher-quality version of the media file automatically. The specialized media player may obtain the higher-quality version of the media file using peer-to-peer or other download acceleration techniques.

WO 2008/070050 A2

Published:

— *without international search report and to be republished upon receipt of that report*

AUTOMATIC CONFIGURATION OF EMBEDDED MEDIA PLAYER

[0001] This application claims the benefit of U.S. Provisional Application Serial No. 60/868,446, filed December 4, 2006, the entire content of which is incorporated herein by reference.

TECHNICAL FIELD

[0002] The invention relates to computer networks, and, in particular to the use of media players on computer devices.

BACKGROUND

[0003] The World Wide Web allows a user to access a resource (e.g., browse to a web page) that contains embedded media. Such embedded media may include audio media, video media, photographs, drawings, and so on. Streaming technology enables a web browser to start presenting the media before the web browser finishes downloading all of the media. For example, a web browser may begin playing a video stream before the web browser downloads all of the video data.

SUMMARY

[0004] In general, the invention is directed to techniques of automatically configuring a media player embedded within a network resource. For example, a user interface, such as a web page may identify a media file that is to be presented as part of the web page. The web browser may use a user interface of a media player to present the identified media file as part of the web page. In this way, a media file may be "embedded" within the web page. In addition, a user interface such as the web page or a user interface of a media player, may display an input mechanism, such as a, for example, a link or button that offers a user the opportunity to present a higher-quality version of the media file. The input mechanism may be, for example, a link, a button, a drop down menu, a field, and the like. When a user downloads the web page to a client device and interacts with

the input mechanism, such as, for example, by clicking a link or button, a specialized media player is automatically configured on the client device. For example, if the specialized media player is not installed on the client device, the specialized media player may be downloaded and installed. The specialized media player then automatically downloads a higher-quality version of the media file and begins playing the higher-quality version of the media file automatically. The higher-quality version of the media file may be obtained from a different network resource. The specialized media player may obtain the higher-quality version of the media file, for example, using peer-to-peer or other static or streaming download acceleration techniques.

[0005] In one embodiment, a method comprises presenting a user interface, such as, for example, a web page with a client device. The web page identifies a media file that is to be presented as part of the web page. In addition, the user interface such as a web page or the user interface for a media player, includes an input mechanism, for example, a link or button that offers a user an opportunity to experience a version of the media file that has higher quality than the media file. The method also comprises automatically configuring a media player on the client device when the user selects such an option by interacting with the input mechanism by for example, clicking a link or button. In addition, the method comprises automatically obtaining the higher-quality version of the media file using the media player. Further, the method comprises automatically presenting the higher-quality version of the media file using the user interface of the media player.

[0006] In another embodiment, a system comprises a client device to present a user interface, such as, for example a web page. The web page identifies a media file that is to be presented as part of the web page. In addition, the user interface, such as a web page or the user interface of a media player includes an input mechanism, such as, for example, a link or button, that offers a user an opportunity to experience a version of the media file that has higher quality than the media file. The client device automatically configures a media player on the client device when the user selects such an option by interacting with the input mechanism by for example, clicking a link or button and the client device automatically obtains

the higher-quality version of the media file using the media player. The client device automatically presents the higher-quality version of the media file using the user interface of the media player.

[0007] In another embodiment, a computer-readable medium comprises instructions. The instructions cause a programmable processor to present a user interface, such as, for example a web page with a client device. The web page identifies a media file that is to be presented as part of the web page. In addition, the user interface such as the web page or the user interface of a media player, includes an input mechanism, such as, for example, a link or button, that offers a user an opportunity to experience a version of the media file that has higher quality than the media file. The instructions also cause the processor to automatically configure a media player on the client device when the user selects such an option by interacting with the input mechanism by, for example, clicking a link or button. In addition, the instructions cause the processor to automatically obtain the higher-quality version of the media file using the media player. The instructions also cause the processor to automatically present the higher-quality version of the media file using the user interface of the media player.

[0008] The details of one or more embodiments of the invention are set forth in the accompanying drawings and the description below. Other features, objects, and advantages of the invention will be apparent from the description and drawings, and from the claims.

BRIEF DESCRIPTION OF DRAWINGS

[0009] FIG. 1 is a block diagram illustrating an exemplary system in which a media player is automatically configured on a client device.

[0010] FIG. 2 is a flowchart illustrating an exemplary operation of a system in which a media player is automatically configured on a client device.

[0011] FIG. 3 is a screen illustration showing an exemplary user interface.

[0012] FIG. 4 is a screen illustration showing an exemplary user interface in which a media player presents a higher-quality version of a media file.

DETAILED DESCRIPTION

[0013] FIG. 1 is a block diagram illustrating an exemplary system 2 in which a media player is automatically configured on a client device 4. Client device 4 may be a personal computer, a gaming platform, a mobile telephone, a personal digital assistant, a handheld computer, a mainframe computer, a network workstation, television set top box, or otherwise.

[0014] For purposes of example, the techniques will be described with respect to web pages, although the techniques may be applied to other types of network resources. Initially, a user 18 of client device 4 may request that a web browser 6 on client device 4 present a web page provided by a web server 10. In response to the request from user 18, web browser 6 may send a request to web server 10 via a network 12. Network 12 may be a wide-area network such as the Internet, a local-area network (LAN), or otherwise. The request may be a Hyper-Text Transfer Protocol (HTTP) request, a HTTP Security (HTTPS) request, or otherwise. In response to the request from web browser 6, web server 10 may send to web browser 6 a response that includes the requested web page. Upon receiving the web page, web browser 6 may render and present the web page.

[0015] The web page may identify a media file that is to be presented as part of the web page. The web page may identify the media file using Hypertext Markup Language tags. For example, a web page regarding a product for sale may include text describing the product along with tags that identify an audio or video file that shows the product in operation.

[0016] In addition to the embedded media file, a user interface, such as, for example, a web page or a user interface of a media player may also include an input mechanism, such as, for example, a link or button that offers user 18 an opportunity to experience a higher-quality version of the media file. The input mechanism may be, for example, a link, a button, a drop down menu, a field, and the like. For example, the input mechanism may include the text "Click here to see this video is High-Definition." The input mechanism may take the form of text, a graphic, or otherwise. In some example embodiments, where the input mechanism is a link or button, user 18 may select the link or button by positioning a cursor over the link or button with a mouse, trackball, or other pointing device and

clicking a button. Alternatively, user 18 may select the link or button using keyboard instructions.

[0017] The input mechanism may specify a Universal Resource Locator of a media player server 14. Thus, when user 18 interacts with the input mechanism to select the higher-quality version of the media file, by for example, clicking on a link or button, web browser 6 sends a request via network 12 to media player server 14. In response to the request from web browser 6, media player server 14 determines whether a media player that is capable of downloading and playing a higher-quality version of the media file embedded on the web page is installed on client device 4 and configured to operate as a plug-in with web browser 6. If media player server 14 determines that such a media player is installed on client device 4, media player server 14 sends a redirect message to web browser 6. The redirect message instructs web browser 6 to automatically send a request for the higher-quality version of the media file to a server on network 12 that provides some or all of the higher-quality version of the media file. For example, media player server 14 may send a HTTP redirect message to web browser 6. Subsequently, the media player requests the higher-quality version of the media file and may begin presenting the higher-quality version of the media file. In some instances, the media player may open a new window to play the higher-quality version of the media file. For instance, the new window may occupy the entire screen. The higher-quality version of the media file may have a higher resolution or size, include less compression, have a higher number of frames per second, and so on. For example, a higher-quality version of a video file may have a resolution comparable to that of video on a high-definition television.

[0018] In some embodiments, the media player may begin to download the higher-quality version of the media file as soon as web page is first loaded on client device 4. In other words, the media player loaded on client device 4 may scan the web page, identify tags that identify the higher-quality media file, and "pre-fetch" the higher-quality version of the media file before user 18 interacts with the input mechanism to select the higher quality version of the media file. In this way, the media player may present the higher-quality version of the media file more quickly

in the event user 18 interacts with the input mechanism to select the higher quality version of the media file.

[0019] On the other hand, if media player server 14 determines a media player that is capable of downloading and playing the higher-quality version of the media file is not installed on client device 4 or configured to operate as a plug-in with web browser 6, media player server 14 may automatically configure the media player on client device 4. For example, media player server 14 may send one or more installation files to client device 4. When client device 4 receives the installation files, client device 4 may prompt user 18 to indicate whether the user consents to the installation of the media player. For instance, client device 4 may automatically launch an installation wizard that prompts user 18 to agree to an end-user license agreement. In some example embodiments, the wizard may also prompt user 18 to provide an email address, to check boxes regarding consumer interests, and so on. If user 18 indicates that it does not consent to the installation of the media player, the media player is not installed in on client device 4. Otherwise, the media player server 14 automatically installs and configures the media player on client device 4. In this way, web browser 6 is not redirected to a separate web page from which user 18 may select a link to download a media player. Rather, the web browser 6 may continue to present the same web page. Thus, after user 18 interacts with the input mechanism to select a higher quality version of the media file, by for example selecting a link or button, the only action required by user 18 to view the higher quality version of the media file is providing an indication of consent to the installation of the media player.

[0020] After the media player is installed on client device 4, the media player may automatically begin downloading the higher-quality version of the media file. To download the higher-quality version of the media file, the media player may use one or more download acceleration techniques. For example, the media player may use a peer-to-peer technology to download the higher-quality version of the media file. When the media player uses a peer-to-peer technology to download a file, the media player downloads all or portions of the file from one or more peer nodes (e.g., other client devices). For instance, the media player may use "swarming" technology provided by Swarmcast, Inc. of Minneapolis, Minnesota.

In general, the media player initiates a "swarming" download by sending a request to a server that is an initial source of the higher-quality version of the media file. For instance, the media player may send a request to web server 10. In response to the request, the server sends a first section of the media file to the media player. However, rather than sending the entire media file to the media player, the server breaks the media file into small sections and begins sending some of these sections to the media player. Meanwhile, a second client device 16 may begin its download process by also contacting the server. The server then sends client device 16 sections of the media file, but sections that are different than the sections sent to client device 4. Simultaneously, client device 4 may begin sending some of the sections of the media file it received to client device 16 and client device 16 may begin sending to client device 4 some of the sections of the media file it has already received. In this way, media players on both client device 4 and client device 16 may begin playing the media file faster than if either of client device 4 or client device 16 had downloaded the media file exclusively from web server 16.

[0021] Otherwise stated, "swarming" may be described as a network encoding method of using a computer for transferring data. This method comprises sending a request for data from a requesting computer to a targeted computer system. In addition, the method comprises accessing at the targeted computer system a look-up list to identify other computers that have previously requested and downloaded at least a portion of the requested data. The method also includes sending requests to the identified computers, wherein upon receiving the requests the identified computers have received different partial portions of the requested data and independently encoding the different partial portions of the data at the identified computers in response to the requests. Furthermore, the method includes sending the encoded different partial portions of the data from the identified computers to the requesting computer and completing the download of the remaining portions of the data with the identified computers. The method also includes receiving, with the requesting computer, the different partial portions of the encoded data from at least two of the sending computers. In addition, the method includes decoding the received encoded data to recreate the requested data from the different partial portions and saving the requested data in memory. This process of downloading

files using "swarming" technology is described in greater detail in U.S. patent 7,277,950 entitled "APPARATUS, METHOD AND SYSTEM FOR AN ACKNOWLEDGEMENT INDEPENDENT EQUALIZED DATA PACKET TRANSFER MECHANISM OVER A PEER TO PEER NETWORK," the entire content of which is hereby incorporated by reference.

[0022] Other exemplary peer-to-peer technologies include receiving data over multiple channels in parallel with data order prioritization. A more complete description of this technology is described in co-pending U.S. patent application 10/788,695 entitled "PARALLEL DATA TRANSFER OVER MULTIPLE CHANNELS WITH DATA ORDER PRIORITIZATION," the entire content of which is hereby incorporated by reference.

[0023] The media player may download the entire higher-quality version of the media file and then begin to present the higher-quality version. Alternatively, the media player may begin presenting the higher-quality version while client device 4 is still receiving the higher-quality version. In some instances, the media file may include an advertisement prior to the actual media file. For example, the media player may present a commercial advertisement first and then present a requested video.

[0024] After the media player begins downloading the higher-quality version of a video file, the media player may open a new window in web browser 6 that appears in front of the window of web browser 6 that presents the web page. The new browser window may present the video file along with one or more buttons to control the presentation (e.g., play, pause, rewind, fast-forward, etc.). This new browser window may occupy the entire viewable area of a computer or television monitor. The web page in the existing window of web browser 6 may remain the same. Because the web page in the existing window may remain the same, user 18 may use the web page in the existing window to easily navigate to other web pages or to interact with the input mechanism to select another web page that offers the opportunity to experience a higher-quality version of another media file.

[0025] This invention may provide one or more advantages. For example, the invention may provide a superior experience for users. For example, a media player may be automatically installed and configured without required that the user

navigate to a separate web page. When a user is required to navigate to a separate web page, the user may lose interest and navigate away from the web page. Consequently, a provider of the web page may lose business and/or advertising revenue. Furthermore, because the media player may utilize one or more download acceleration techniques, the media player may download a higher-quality version of a media file in an equivalent amount of time that it may take to download a lower-quality version of the media file. In addition, the higher-quality version of the media file may provide a more compelling experience for the user. As a result, the user may stay longer at the web page and may be more likely to purchase a product from the web page.

[0026] FIG. 2 is a flowchart illustrating an exemplary operation of a system in which a media player is automatically configured on a client device. Initially, user 18 may request a network resource user interface, e.g., a web page (30). For example, user 18 may enter a universal resource locator (URL) of the web page in an address bar of web browser 6 or may use web browser 6 to interact with an input mechanism to select a URL of the web page. User 18 may interact with an input mechanism to select the URL of the web page by, for example, selecting a link or button that points to the URL of the web page. Web browser 6 may then send a request for the web page to web server 10 (32). In response to the request, web server 10 may send the requested web page to web browser 6 and the web browser may receive the web page (34). The web page includes one or more tags that identify a media file that is to be presented as part of the web page. For example, the identified media file may be a Flash Video file playable by a Flash Video player available from Abode Systems Inc. of San Jose, California, a QuickTime video file playable by a QuickTime video player available from Apple Computer of Cupertino, California, or otherwise.

[0027] After receiving the web page, user 18 may interact with the input mechanism on a user interface, such as a web page, or a user interface of a media player to offer the user the opportunity to experience (e.g., view, hear, etc.) the media file in "High-Definition" (36). User 18 may interact with the input mechanism on a user interface, such as a web page, or a user interface of a media player by for example, selecting a link or button on the web page or in the user