UNITED STATES PATENT AND TRADEMARK OFFICE

BEFORE THE PATENT TRIAL AND APPEAL BOARD

GOOGLE LLC,
Petitioner,

v.

TOUCHSTREAM TECHNOLOGIES, INC.,
Patent Owner.

Case No. IPR2022-00795
U.S. Patent No. 8,356,251

PATENT OWNER'S RESPONSE
PURSUANT TO 37 C.F.R § 42.120

Charter Ex. 1165

TABLE OF CONTENTS

I. The ’251 Patent 4

A. Claims 4

B. Specification 6

C. Prosecution History 11

II. Level of Ordinary Skill in the Art 12

III. Claim Construction 13

A. “Media Player” 13

B. “Programming Code” 16

IV. Petitioner’s Grounds and Cited References 20

A. Muthukumarasamy 20

1. Muthukumarasamy’s presentation and selection of content 22

2. Muthukumarasamy describes two distinct processes that may be initiated by the IED 24

B. Hayward 28

V. Legal Standards 29

VI. The Challenged Claims Would Not Have Been Obvious over Muthukumarasamy Alone (Ground I) or in View of Hayward (Ground II) 30

A. Muthukumarasamy Describes Two Distinct Processes, Neither Disclosing the Claimed Method, and Petitioner Fails to Show Any Obvious Modification Satisfying the Claims 31

1. Petitioner Relies on Muthukumarasamy’s Descriptions of Two Separate Processes 32

2. Neither the RCIBS Process nor the zHub/zNode Process Discloses All the Limitations of the Challenged Independent Claims 37

B. Muthukumarasamy Does Not Disclose or Suggest Converting the Universal Playback Control Command Includes Selecting from among a Plurality of Specific Commands That Correspond to a Respective Media Player 54

C. Petitioner Fails to Prove That an Ordinary Artisan Would Have Considered the zHub and zNode Part of a *Server System* with Muthukumarasamy’s Server 55

D. Claims 2, 5, 6–8, 9 Would Not Have Been Obvious.....58
VII. Conclusion 58

PATENT OWNER'S EXHIBIT LIST

Exhibit No.	Description
2001	*Touchstream Technologies, Inc. v. Google LLC*, Case No. 6:21-cv-00569-ADA (E.D. Tex.) - Docket
2002	DocketNavigator Time to Milestones – Waco Division, from September 18, 2018 to present
2003	Email from Google's Counsel, dated July 7, 2022
2004	Declaration of Jordan T. Bergsten
2005	Touchstream's Preliminary Infringement Contentions, dated August 27, 2021
2006	Google's Preliminary Invalidity Contentions, dated October 22, 2021
2007	Google's Supplemental Preliminary Invalidity Contentions, dated January 3, 2022
2008	Touchstream's Amended Preliminary Disclosure of Asserted Claims, Infringement Contentions, and Priority Dates, dated November 8, 2021
2009	Google's Final Invalidity Contentions, dated April 14, 2022
2010	Google's Notice of Subpoenas to Boxee, dated April 14, 2022
2011	Google's Notice of Subpoenas to Lynx Tech, dated April 14, 2022
2012	Google's Notice of Subpoenas to Peel Tech, dated April 14, 2022
2013	Google's Notice of Subpoenas to Samsung, dated April 14, 2022
2014	Touchstream's First Set of Requests for Production, dated April 15, 2022
2015	Touchstream's First Set of Interrogatories, dated April 19, 2022
2016	Touchstream's Second Set of Interrogatories, dated April 25, 2022
2017	Google's First Set of Requests for Production to Touchstream, dated April 25, 2022
2018	Google's First Set of Interrogatories to Touchstream, dated April 25, 2022

2019	Exhibit J to Google's Final Invalidity Contentions, dated April 14, 2022
2020	Order Granting Joint Motion to Amend Scheduling Order (Dkt. 81), *Touchstream Technologies, Inc. v. Google LLC*, Case No. 6:21-cv-00569-ADA (E.D. Tex.)
2021	Transcript of the Deposition of Benjamin B. Bederson, Ph.D. on December 21, 2022
2022	Declaration of Kevin C. Almeroth, Ph.D.
2023	Curriculum Vitae of Kevin C. Almeroth, Ph.D.

Petitioner Google LLC fails to meet its burden of proof to show any of claims 1, 2, 5, 6, 7, 8, 9 of U.S. Patent No. 8,356,251 (the "'251 patent") would have been obvious over Muthukumarasamy (Ex. 1008) alone or in view of Hayward (Ex. 1009) for at least the reasons set forth herein. Accordingly, Patent Owner Touchstream Technologies, Inc. respectfully requests that the Board confirm the patentability of all challenged claims.

First, Petitioner relies on Muthukumarasamy's descriptions of two distinct processes, which use different components of Muthukumarasamy's system to present different types of content: the "RCIBS" for internet content and the "zHub and zNode" for non-internet content. Neither of these processes satisfies all the limitations of the challenged claims, and Petitioner fails to offer any rationale for combining features of these two processes (Ground I) and fails to show that the proposed combination with Hayward (Ground II) cures the deficiencies in Muthukumarasamy. Petitioner therefore fails to prove obviousness.

RCIBS process: For certain limitations, Petitioner relies on a process in Muthukumarasamy for presenting internet media content using remote-controlled internet browser software (RCIBS). This process fails to meet all the limitations of (at least) the step that recites "receiving, in a server system, one or more signals from the personal computing device." The claims require *signals* "specify[] a video file

to be acted upon and identify[] a particular media player for playing the video content." For these requirements, Petitioner relies on commands that are not *received in* the alleged *server system*. Instead, Muthukumarasamy describes a mobile phone (the alleged *personal computing device*) sending the commands to the RCIBS, which Petitioner identified as part of the *display device* and not part of the *server system*. Moreover, Petitioner does not even contend that the RCIBS process includes "converting, by the server system, the universal playback control command into corresponding programming code," as recited by the claims.

zHub/zNode process: For other limitations, Petitioner relies on Muthukumarasamy's discussion of a second, different process for presenting content from non-internet sources (*e.g.*, cable or broadcast channels) using a zHub and zNode. The description of this process does not disclose using any "media player" or "programming code," which (under correct constructions) require a software application and executable computer program instructions, respectively. Muthukumarasamy discloses a process using hardware media devices (not software) and analog signals (not executable computer program instructions).

Alleged obviousness: Petitioner offers no evidence or argument that it would have been obvious to modify Muthukumarasmy by combining these two cited processes. In addition, Petitioner's proposed combination with Hayward (Ground

II)—implementing the RCIBS using Hayward's alleged teachings—would not have resulted in the claimed invention. Even in the combination, the RCIBS (alleged *display device*) would still *receive signals* that, in the claims, must be *received in the server system*. Furthermore, Petitioner's proposed combination does not result in any changes to the zHub/zNode process.

Second, Grounds I and II both fail because Muthukumarasamy does not disclose the *universal playback control command* of the claims, and Hayward does not cure this deficiency. Muthukumarasamy discloses context-specific commands that expressly dependent on the type of the content, *e.g.*, live TV or DVD recording. (According to the Petition, a given content type corresponds to a *particular media player*.) The claims also recite the *universal playback control command* is included in the *signals* that must be *received in the server system*, but the messages in the combination with Hayward are received by the alleged *display device*.

Third, Grounds I and II also fail because Petitioner fails to show that all the steps associated with the *server system* of the claims are performed by the same *server system*. The components Petitioner identifies as the alleged *server system* are described in Muthukumarasamy as two different systems: (1) an internet server and (2) a media control network composed of a zHub and zNodes at a customer premise. Petitioner points to the internet server for limitations relating to the "synchronization

code" and to the media control network for other *server system* functions. Petitioner's combination of these two systems into one *server system* is based solely on hindsight.

I. THE '251 PATENT

The '251 patent is titled "Play Control of Content on a Display Device," issued on January 15, 2013, from U.S. Patent Application No. 13/245,001. Ex. 1001 (cover). It generally relates to methods for presenting and controlling media content using a *display device*, a *server system*, and a *personal computing device*. *See id.* The application that matured into the '251 patent was filed September 26, 2011, and claims priority to an earlier utility application (filed June 10, 2011) that issued as U.S. Patent No. 8,904,289 (the "'289 patent"), which is the subject of another petition by Petitioner. *See Google LLC v. Touchstream Techs., Inc.*, IPR2022-00794, Paper 1 (PTAB Apr. 8, 2022). The '251 patent also claims priority to an earlier provisional application (filed April 21, 2011). Ex. 1001 (cover). The '251 patent names David Strober as its sole inventor and Patent Owner as the assignee. *Id.*

A. Claims

Of the challenged claims, only claim 1is independent. Claim 1 recites:

> 1. A machine-implemented method of controlling presentation of video content on a display device that loads

any one of a plurality of different media player players, the method comprising:

assigning, by a server system, a synchronization code to the display device;

receiving, in the server system, a message from a personal computing device that is separate from the server system and separate from the display device, wherein the message includes the synchronization code;

storing, by the server system, a record establishing an association between the personal computing device and the display device based on the synchronization code;

receiving, in the server system, one or more signals from the personal computing device, the one or more signals specifying a video file to be acted upon and identifying a particular media player for playing the video content, the one or more signals further including a universal playback control command for controlling playing of the video content on the display device by the particular media player,

converting, by the server system, the universal playback control command into corresponding programming code to control playing of the video content on the display device by the particular media player, wherein converting the universal playback control

command includes selecting from among a plurality of specific commands, each of which represents a corresponding playback control command for a respective media player; and

storing, in a database associated with the server system, information for transmission to or retrieval by the display device, wherein the information specifies the video file to be acted upon, identifies the particular media player for playing the video content, and includes the corresponding programming code to control playing of the video content on the display device by the particular media player in accordance with the universal playback control command.

B. Ex. 1001, 11:22–60.Specification

The ’251 patent discloses various embodiments to illustrate how the invention allows a user to locate content (*e.g.*, video content) on a personal computing device, like a mobile phone, and cause playback of that content on a second device (*e.g.*, a television set) or other display device. As recited in the claims, a server system facilitates this process.

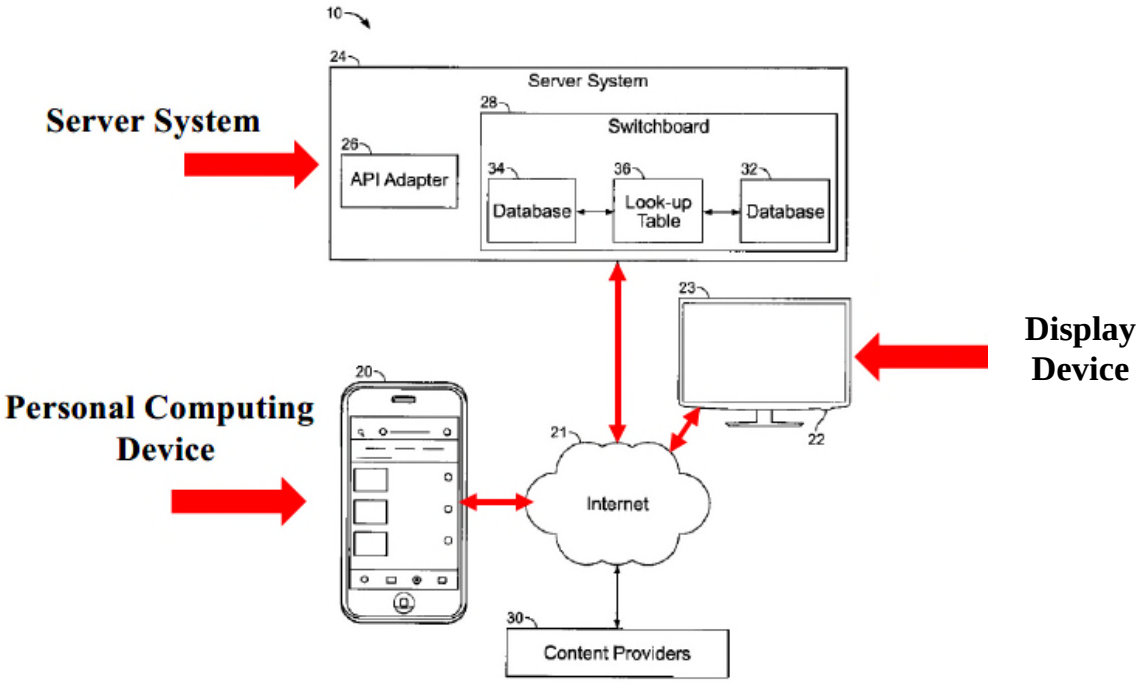

FIG. 1

Ex. 1001 (Fig. 1, annotated)

Figure 1 (reproduced above in annotated form) depicts an overview of the system according to certain embodiments. Ex. 1001, 2:41–42. As shown, the mobile device, digital device (e.g., television set with a display), and server system of this embodiment are connected to the Internet. *Id.*, 2:66–3:1. The personal computing device (here, mobile device) acts as a controller, locating and selecting content via the Internet and sending commands that instruct the television set to obtain the selected content from the Internet and to present the content. *See id.*, 3:1–29. In one embodiment, a mobile phone sends messages to a server system when a user selects content and requests that it be displayed on the television set. *Id.*, 3:12–15. The television set "is operable to link back to a server system 24 from which the

television set receives commands." *Id.*, 3:10–11. The server system may send commands instructing the television set, in some embodiments, "to access a content provider 30 through the Internet 21, load a specific media player, load the media player-specific content (e.g., a video) and play the content on the television display 23." *Id.*, 3:18–23.

For the television set to present selected content, a user must have already established a connection between the mobile phone and the television set. *See id.*, 4:65–5:7. For certain embodiments, establishing that connection involves a "synchronization code" that uniquely identifies the display device, *e.g.*, television set. *Id.*, 5:8–10, 5:14–16. For example, the user may run software on the display device that connects it to the server system. *See id.*, 7:17–23. Upon connection, the server system may assign the television set a synchronization code (or sync code), which may then appear on the television set display (*e.g.*, as text or a QR code). *See id.*, 5:16–21, 5:26–29, 7:24–25. The user enters the sync code (or scans it, if a QR code is used) using the mobile phone, which then sends the sync code to the server system in a message. *See id.*, 5:16–21. 5:36–41, 7:25–31. The server then establishes a connection between the mobile phone and the television set that the sync code identifies. *Id.*, 5:32–41, 7:32–35.

When there is an established connection with the television set or other display device, the mobile phone, display device, server system, and content providers send and receive messages and information to and from each other. Figure 2 (reproduced below in annotated form) illustrates how this works in certain embodiments, and the following description references the annotations.

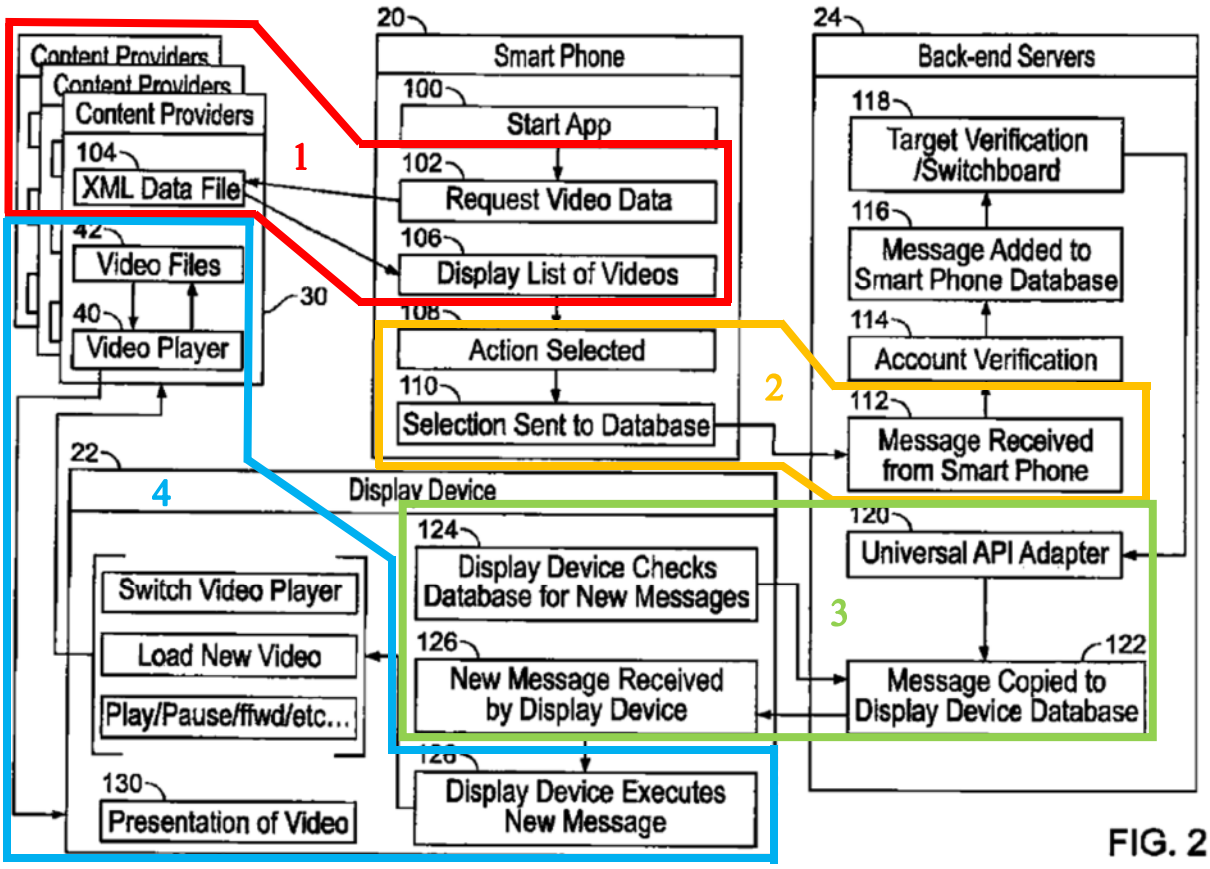

Ex. 1001 (Fig. 2, annotated)

(1) Using the Internet, the mobile phone 20 can retrieve information (*e.g.*, XML data files) about content (*e.g.*, video) from content providers and can display information to a user. *See id.*, 3:63–4:22. **(2)** The user may select an action to be

performed (*e.g.*, play a selected video on a selected display device), which causes the phone to send a message to the server system. *Id.*, 4:23–29. In embodiments, the message "contains a transmission code that includes data regarding the user information . . ., the secondary display it wants to connect to . . ., the location and name of the media player for the selected video, the command (e.g., play, pause, rewind, etc.), and the video file to be acted upon." *Id.*, 4:29–35; *see id.*, Fig. 3 (depicting a possible transmission code format).

Because different media players may require different programming codes (*e.g.*, JavaScript commands), the server system 24 loads protocols for the particular media player identified by mobile phone 20. *Id.*, 5:54–67. **(3)** Using these protocols, the server system converts an incoming universal command (*e.g.*, play, pause etc.) "into the correct JavaScript (or other programming) code used by the target device 22 to control the specific player (block 120)." *Id.*, 5:58–62, 5:65–6:3; *see id.*, 6:7–18, 6:51–62. The correct programming code replaces the universal command in the message, which the display device may then retrieve from the server system. *See id.*, 6:3–6, 6:19–29. **(4)** The display device executes the message from the server, retrieving the identified content, retrieving and/or loading the particular media player identified (if not already stored and loaded on the display device), and

executing the programming code that corresponds to the universal command. *See id.*, 3:18–23, 6:30–46, 6:60–62.

C. Prosecution History

The claims of the ’251 patent issued after rigorous examination during which application claim 1, corresponding to issued claim 1, was twice rejected as anticipated by U.S. Published Application No. 2011/00600998 (“Schwartz”). Ex. 1003 at 350–65, 437–42; *see id.* at 350–81, 437–57 (office actions rejecting claims, including claim 1); Ex. 1011 (Schwartz). Over the course of prosecution, Applicant amended claim 1 to distinguish over Schwartz. *See* Ex. 1003 at 210–11, 422. These amendments added limitations to recite that the display device “loads any one of a plurality of media players” and to require several steps pertaining to “the particular media player” identified in the “one or more signals” received in the server system from the personal computing device. *Id.* Applicant also added a limitation to the “converting” step requiring that “converting the universal playback control command includes selecting from among a plurality of specific commands, each of which represents a corresponding playback control command for a respective media player.” *Id.* at 422. And the first three claim steps—“assigning,” “receiving,” and “storing,” which all pertain to a “synchronization code”—were added in their entirety through an Examiner’s amendment to obtain allowance. *Id.* at 204, 209–11.

Further, the prosecution history of the ’251 patent made remarks about the meaning of the claim term “media player”:

> In the context of the present application, it is clear that a “media player” refers to application software for playing back the video content.[1] Thus, the claims and specification refer in some cases, for example, to “loading” or “unloading” a media player. A particular display device, therefore, may, in some cases, be able to load or store any one of different media players.

Ex.1003, 403 n.2 (internal citations omitted) (citing Ex.1003, 485 l.22, 490 ll.18–27). After a subsequent rejection (*id.*, 349), the ’251 patent claims were allowed with an examiner’s amendment. *See id.*, 205–21. That amendment added, in part, a requirement to claim 1 that the recited “display device” “loads any one of plurality of different media [] players,” and that the “media player” recited in the body of the claim be a “particular media player.” *Id.*, 210–11 (underlining in original).

II. LEVEL OF ORDINARY SKILL IN THE ART

As Dr. Almeroth explains, a person of ordinary skill in the art of the 251 Patent (also referred to herein as an ordinary artisan) would have had (1) the equivalent of

[1] Then-pending claims in what became the ’251 patent recited “specifying a video file” and “playing the video content.” Ex.1003, 422–28.

a four-year, B.S. degree from an accredited institution in computer science, computer engineering or an equivalent field; (2) approximately two years of professional experience with Internet-based video delivery systems; and (3) working proficiency with network architecture, including Internet-hosted server-client systems, and with computer programming. Ex.2022 ¶ 43. *See generally id.* ¶¶5–28 (Dr. Almeroth summarizing his qualifications in the relevant field), 45–80 (describing the state of the art at the time of the invention); Ex.2023. Additional graduate education could substitute for professional experience, while significant experience in the field might substitute for formal education. *Id.* This level of ordinary skill in the art is consistent with the level adopted by Petitioner: "at least a bachelor's degree in electrical engineering or computer science (or equivalent experience) and two years of experience designing or implementing interactive systems with networked media or media playback systems." Pet., 13.

III. CLAIM CONSTRUCTION

A. "Media Player"

Considering the intrinsic record, including the file history, an ordinary artisan would have understood the ordinary and customary meaning of "media player" in the '251 patent refers to application software and does not encompass hardware devices. Ex.2022 ¶ 95; *see also id.* ¶¶81–92 (reviewing the intrinsic record). This meaning is evident from the claims themselves, which recite actions (like

"load[ing]" "media players") that support a "media player" being application software. *Id.*; *see* Ex.1001, 11:22-60. Furthermore, the written description uses "media player" in a similar manner, and the Applicant expressly defined "media player" as software during prosecution of a related application. Thus, in the context of the '251 patent, the ordinary meaning of "media player" requires a software application. Ex.2022 ¶ 94.

First, the claim language supports the understanding that a "media player" must be application software. *See* Ex.2022 ¶ 94. For example, the '251 patent's claims recite a "display device that loads any one of a plurality of different media players." Ex.1001, 11:22-60. They also recite "converting, by the server system, the universal playback control command into corresponding programming code to control playing of the video content on the display device by the particular media player" *Id.* These are common actions associated with software, which is comprised of instructions that may be transmitted as data over a network. Ex.2022 ¶ 96. A software application can also be loaded by a data processing system (*e.g.*, part of a *display device*) in order to execute the instructions. *Id.*

Similarly, the claim language supports that "media player" excludes hardware devices. For example, the step of "a display device that loads any one of a plurality of different media players" would be impossible to perform if a "media player" were

a hardware device; devices are not *loaded in* other devices. *See id.* ¶ 97 (calling this interpretation a "non sequitur").

The written description of the '251 patent also uses "media player" in a manner that indicates application software. *Id.* ¶ 98. It refers to a "television set . . . load[ing] a new media player (if needed) over the Internet" and a "display device [] request[ing] and obtain[ing] a copy of the appropriate media player," if it is not already "loaded." Ex.1001, 3:29-33, 6:34-42. The specification also describes using an application programming interface ("API") to enable communications with an online "media player." *Id.*, 9:15-18; *see* Ex.2022 ¶ 98. Like the claims' reference to "load[ing]," these descriptions indicate that a "media player" is application software and excludes hardware devices. Ex.2022 ¶ 98.

The prosecution history further supports construing "media player" as referring to application software. *See id.* ¶ 99; Ex.1003, 403 n.2; As Petitioner admits, during prosecution, the Applicant "defined the claimed 'media player' as 'application software'" for performing the function specified in the claim. Pet., 26 (quoting Ex.1003, 403 n.2). The Applicant cited, as support for this definition, contextual use of "media player" similar to that described above. *See* Ex.1003, 403 n.2 ("[T]he claims and specification refer in some cases, for example, to 'loading' or 'unloading' a media player.").

The term "media player" in the '251 patent should be construed consistently across related patents that share a common specification. *See Samsung Elecs. Co. v. Elm 3DS Innovations, LLC*, 925 F.3d 1373, 1378 (Fed. Cir. 2019) (quoting *SightSound Techs., LLC v. Apple Inc.*, 809 F.3d 1307, 1316 (Fed. Cir. 2015)) ("Where multiple patents derive from the same parent application and share many common terms, we must interpret the claims consistently across all asserted patents.").

B. "Programming Code"

The term "programming code," which appears in claim 1 of the '251 patent, should be construed as "computer program instruction(s) encoded for execution by a data processing apparatus (such as a computer processor)." Ex. 2022 ¶¶ 100-105. Patent Owner's proposed construction gives effect to the ordinary and customary meaning of "programming code," in view of the intrinsic evidence. An express construction is needed however because Petitioner's position, in effect, "portray[s] the ordinary and customary meaning as something other than it is." *See Evenflo Co., Inc. v. Veer Gear LLC*, No. 3:20-CV-030, 2022 WL 17252215, at *2, *6 (S.D. Ohio Nov. 28, 2022) (construing "pushing" and "pulling" as "pushing only" and "pulling only"); *see also Helmsderfer v. Bobrick Washroom Equip., Inc.*, 527 F.3d 1379, 1383 (Fed. Cir. 2008) (clarifying that the "ordinary meaning attributable to the word 'partially' . . . does not include 'totally'"). Indeed, to adopt a broader construction

would be to improperly ignore the context of the patent. *See Personalized Media Commc'ns, LLC v. Apple, Inc.*, No. 215CV01206JRGRSP, 2016 WL 6247054, at *20 (E.D. Tex. Oct. 25, 2016) (construing different types of code to have distinct definitions); *see also Trs. of Columbia Univ. v. Symantec Corp.*, 811 F.3d 1359, 1363 (Fed. Cir. 2016) ("The only meaning that matters in claim construction is the meaning in the context of the patent.").

Claim 1 of the '251 patent recites, in part, "converting, by the server system, the universal playback control command into corresponding programming code to control playing of the video content on the display device by the particular media player"." Ex. 1001, 11:43-46.

This claim language demonstrates that the "programming code" of the claims is for performing an action, specifically "to control playing of the video content on the display device by the particular media player." Ex. 2022 ¶ 101. The claim language also confirms that "programming code" "represents a corresponding playback control command for a respective media player." *Id.* These requirements of "programming code" are reflected in Patent Owner's proposed construction—it must include "instruction(s)" to perform the recited action, *e.g.*, when executed by a data processing system. *Id.*

Patent Owner's construction also reflects the way programming code is discussed in the specification, which provides further support. For example, the specification describes using an adapter (26) to convert incoming commands "into the correct JavaScript (or other programming) code used by the target device 22 to control the specific player (block 120)." Ex. 1001,6:1-3; *see id.*, 5:57-58 (describing video players using "JavaScript commands to control their respective playback"), Fig. 2 (depicting "Universal API Adapter" in block 120). The specification goes on to describe an embodiment in which the adapter is implemented as a look-up table. *Id.*, 6:8-9, Fig. 5. In this description, "for a universal command 'Pause,' the universal adapter 26 provides the corresponding command for each of several specific media players (e.g., 'pauseVideo' for Ted.com)." *Id.*, 6:12-16.

In this description, JavaScript code—*i.e.*, code written in the JavaScript programming language—is an example of "programming code" being used to control a media player, *e.g.*, to present content. Ex.2022 ¶ 102; *see* Ex.2021, 93:14–19 ("JavaScript is an example of a programming language, and it is described here as an example, a programming code."). The specification equates "code" written in a "programming language" with a "computer program." Ex.2022 ¶ 104; *see* Ex.1001, 10:10-16 ("A computer program (also known as . . . <u>code</u>) can be written in any form of programming language, ..."). And the specification defines

"computer programs" as "one or more modules of computer program instructions, encoded on computer storage medium for execution by, or to control the operation of data processing apparatus." Ex.1001, 9:45-50 (underline added); *see also id.*, 10:23-30 (describing "computer programs" being "executed" on computers, using processors). Instructions may also "be encoded on an artificially-generated propagated signal . . . generated to encode information for transmission to suitable receiver apparatus for execution by a data processing apparatus." *Id.*, 9:50-55. Hence, the "code" written in a "programming language" that comprises a "computer program" would be "computer program instruction(s)," *e.g.*, some portion of a "computer program." Ex.2022 ¶ 104.

The specification, taken as a whole, shows that "programming code" refers generally to the kind of code used in writing computer programs. *Id.* The specification describes an embodiment using "JavaScript commands," Ex.1001, 5:57-58, which are also described as "programming[] code." Ex.2022 ¶ 105 (citing Ex.1001, 5:65–6:3). "This 'programming code' comprises an instruction, written in a programming language (*e.g.*, JavaScript), that is executed by a 'target device' to control the operation of a particular media player running on that device." *Id.* (citing Ex.1001, 5:54–6:18, Fig. 5). Thus, the "programming code" controls the operation of a data processing device that executes the instructions, consistent with how the

specification describes "computer programs." *Id.* (citing Ex.1001, 9:45-50, 10:10-12). Patent Owner's proposed construction reflects this understanding, using the same language as the specification. *Id.*

For at least these reasons, the Board should adopt Patent Owner's proposed construction of "programming code." *See* Ex. 2022 ¶¶ 100-105.

IV. PETITIONER'S GROUNDS AND CITED REFERENCES

Petitioner asserts that the challenged claims would have been obvious over Muthukumarasamy[2] alone (Ground I) or in view of Hayward[3] (Ground II). Pet., 2–3. For both Grounds, Petitioner cites Muthukumarasamy's descriptions of disparate system elements without explaining how those portions relate to one another. *See infra* IV.A.2. Patent Owner therefore provides a detailed overview of Muthukumarasamy's operations below, particularly as to the different processes used for internet media content and all other content.

A. Muthukumarasamy

Muthukumarasamy describes what it calls a Device-Based Control System (DBCS) that, "using a combination of premise hardware, a software system, and/or

[2] U.S. Published Patent Application No. 2010/0241699 A1 to Muthukumarasamy, *et al.* (Ex. 1008).

[3] U.S. Patent No. 8,918,812 B2 to Hayward (Ex. 1009).

internet access, allows consumers to select and control media content via their internet-enabled device [or IED]." Muthukumarasamy, [0026]–[0027]. Figure 1 (reproduced below) depicts certain components of the DBCS, including an internet server (1) and a "DBCS application or software that executes on a processor of the [IED (4)]." *Id.* [0045]; *see id.* [0007]. Figure 1 also depicts a zHub (2) and a zNode (3) present at a customer premise, referring to these components collectively as a "media control network." *Id.* [0044].

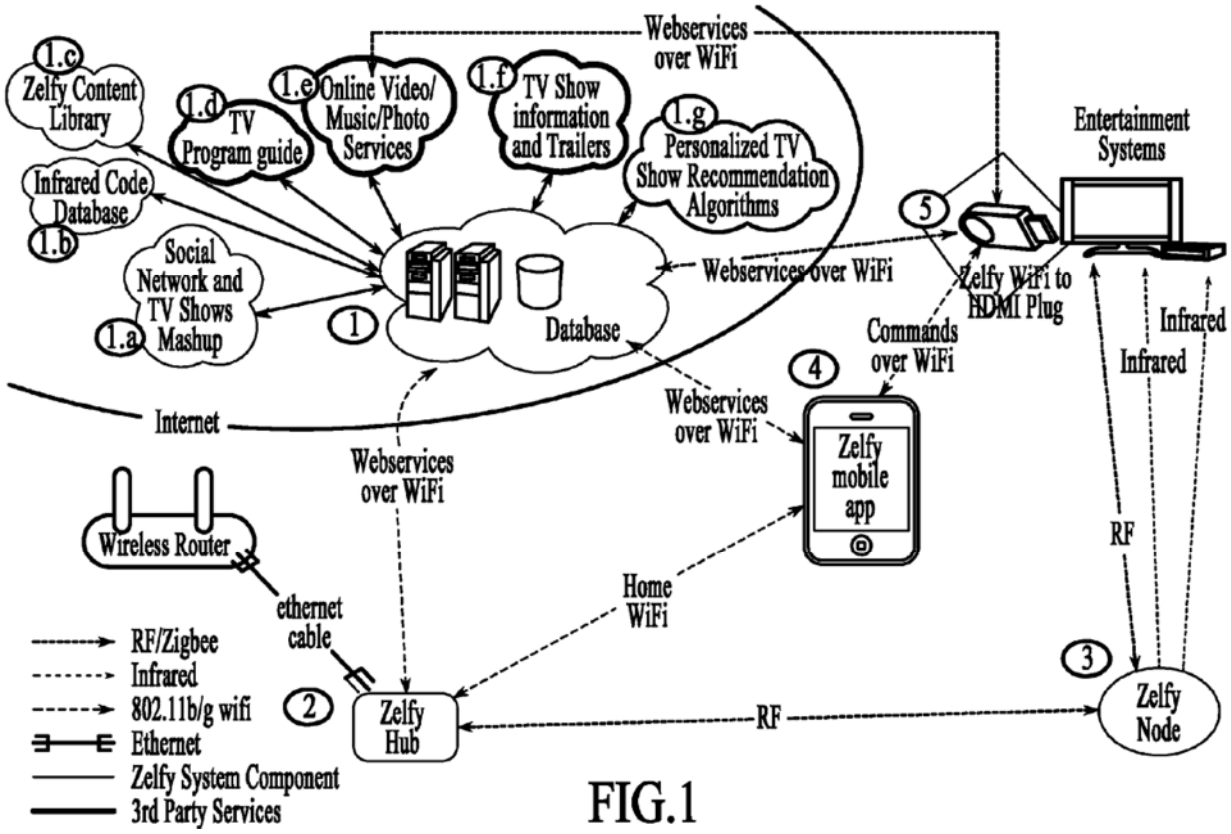

Muthukumarasamy, Fig. 1

Muthukumarasamy also describes the DBCS including, in an embodiment, remote-controlled internet browser software (RCIBS) that "is deployed on a

computer that has video, audio and internet capabilities and is connected to the home network of the user." *Id.* [0083]. Figure 18 (reproduced below) depicts the home network, to which the IED is also connected. *Id.* "The RCIBS is a remote controllable internet browser optimized for internet-media consumption." *Id.*

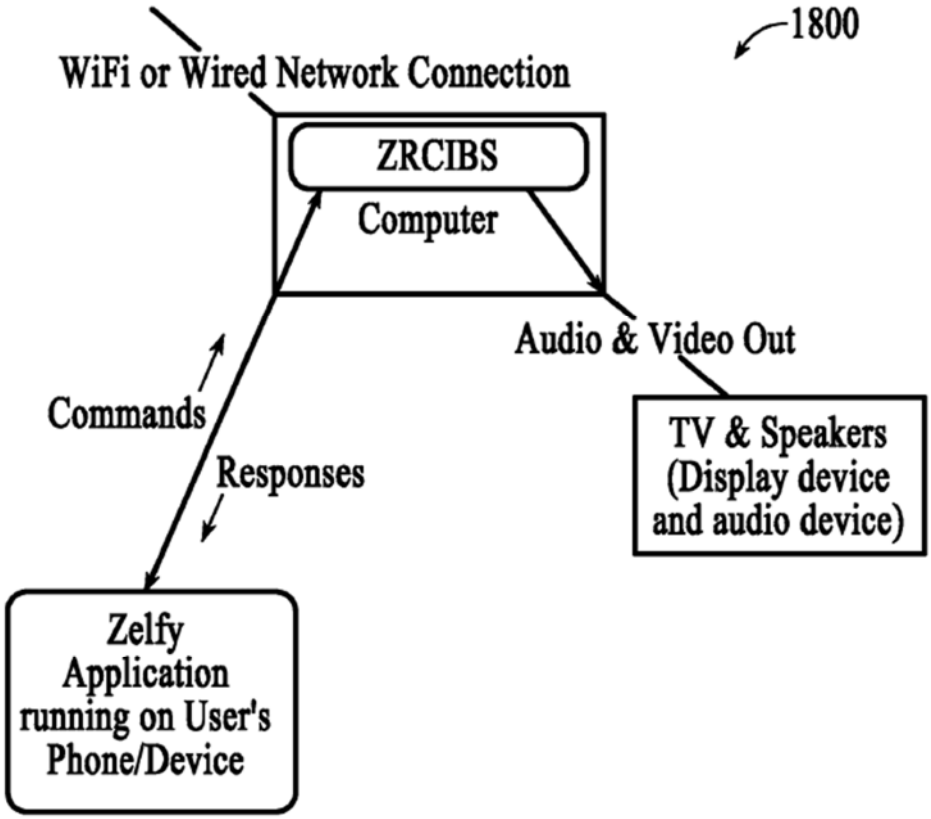

FIG.18

Muthukumarasamy, Fig. 18

1. Muthukumarasamy's presentation and selection of content

Muthukumarasamy expresses a goal of providing users with a "device-agnostic and source-agnostic entertainment experience." Ex.2022 ¶ 107;

Muthukumarasamy [0027]. To that end, Muthukumarasamy's DBCS application running on the IED (also referred to as "the media management application") presents a user with content choices aggregated across multiple sources. Ex.2022 ¶ 107; *see* Muthukumarasamy [0044], [0047], [0049], Figs. 2–3. The presented content choices are curated by a personalized content recommendation system ("CRS") using detailed information about the user, including in part the "media services (e.g., cable, broadcast, etc.) the user has in the premise." *Id.* [0049], [0076]. *See generally id.* [0070]–[0078].

The IED also maintains information about "the devices at a consumer's premise," including which of the devices are "content sources" for video and/or audio. Muthukumarasamy [0068], [0069], Figs. 13–15; *see* Ex.2022 ¶ 111-12. Using the device information stored by the IED and a content selection, the DBCS application on the IED "automatically controls delivery of selected media content and <u>selects</u> and controls <u>the media devices</u> that deliver the selected media content according to a media type of the selected media content." *Id.* [0048] (underline added); *see* Ex.2022 ¶ 111. Muthukumarasamy describes two distinct processes (described below) for controlling delivery of content; the IED selects which one to initiate. Ex.2022 ¶ 112; *see* Muthukumarasamy [0048]–[0049], [0068]–[0069].

2. Muthukumarasamy describes two distinct processes that may be initiated by the IED

Muthukumarasamy describes a process used for internet media content, in which the IED remotely controls internet browser software (the RCIBS). Ex.2022 ¶ 113; *see* Muthukumarasamy [0045], [0083], Figs. 18, 19. Muthukumarasamy also discusses a second, distinct process by which the IED, used with a zHub and zNodes, controls media hardware devices located in the premise. Ex.2022 ¶ 113; *see* Muthukumarasamy [0056]–[0060]. This process is used for non-internet content, for which the content source is a device at the customer premise, such as a TV antenna (for broadcast) or a set-top box (for cable). Ex.2022 ¶ 113; *see* Muthukumarasamy [0056]–[0060], [0068]–[0069], Figs. 13–15. An ordinary artisan reading Muthukumarasamy would have understood that these two processes (referred to herein, for convenience, as the "RCIBS process" and the "zHub/zNode process") are separate and distinct from one another. Ex.2022 ¶ 113.

Muthukumarasamy describes the RCIBS providing a user with access to internet media content. Ex.2022 ¶ 114; Muthukumarasamy [0083], Fig. 19; *see* Muthukumarasamy [0045]. The full name of the RCIBS—"remote-controlled internet browser software"—discloses a great deal about its operation. Ex.2022 ¶ 114. The RCIBS is browser software operating on a computer connected to a display device and an audio device (*e.g.*, "TV & Speakers"). Muthukumarasamy [0083], Fig.

18. As with conventional browsers, Muthukumarasamy describes a user accessing online content in the RCIBS by navigating to the URL of the content or using a third-party content provider's web interface. *Id.* [0083], Fig. 19. The difference between the RCIBS and a conventional browser application of the time (*e.g.*, Internet Explorer) is that the RCIBS is programmed to execute commands received over a home network from the DBCS application running on an IED. *Id.* [0083], Figs. 18–19; Ex.2022 ¶ 114.

The RCIBS process begins with the IED sending a command to the RCIBS over the home network (*e.g.*, WiFi) (step R1). Ex.2022 ¶ 115; Muthukumarasamy, [0083], Figs. 18, 19. When the command includes instructions to retrieve new content, the RCIBS interacts with the appropriate Online Video/Music/Photo Services (1.e) using its WiFi connection to access the internet (step R2). Ex.2022 ¶ 115; Muthukumarasamy, [0083], Figs. 1, 18, 19. The RCIBS retrieves the media content over the same connection (step R3). Ex.2022 ¶ 115; Muthukumarasamy, [0083], Figs. 1, 18, 19. These steps are depicted in the annotated figure below. (Figure 1 does not depict an RCIBS, but an ordinary artisan would have understood that the RCIBS, when present, would run on a WiFi-connected computer in essentially the same location as the "Zelfy WiFi HDMI Plug" with similar access to "Online Video/Music/Photo Services." Ex.2022 ¶ 116.)

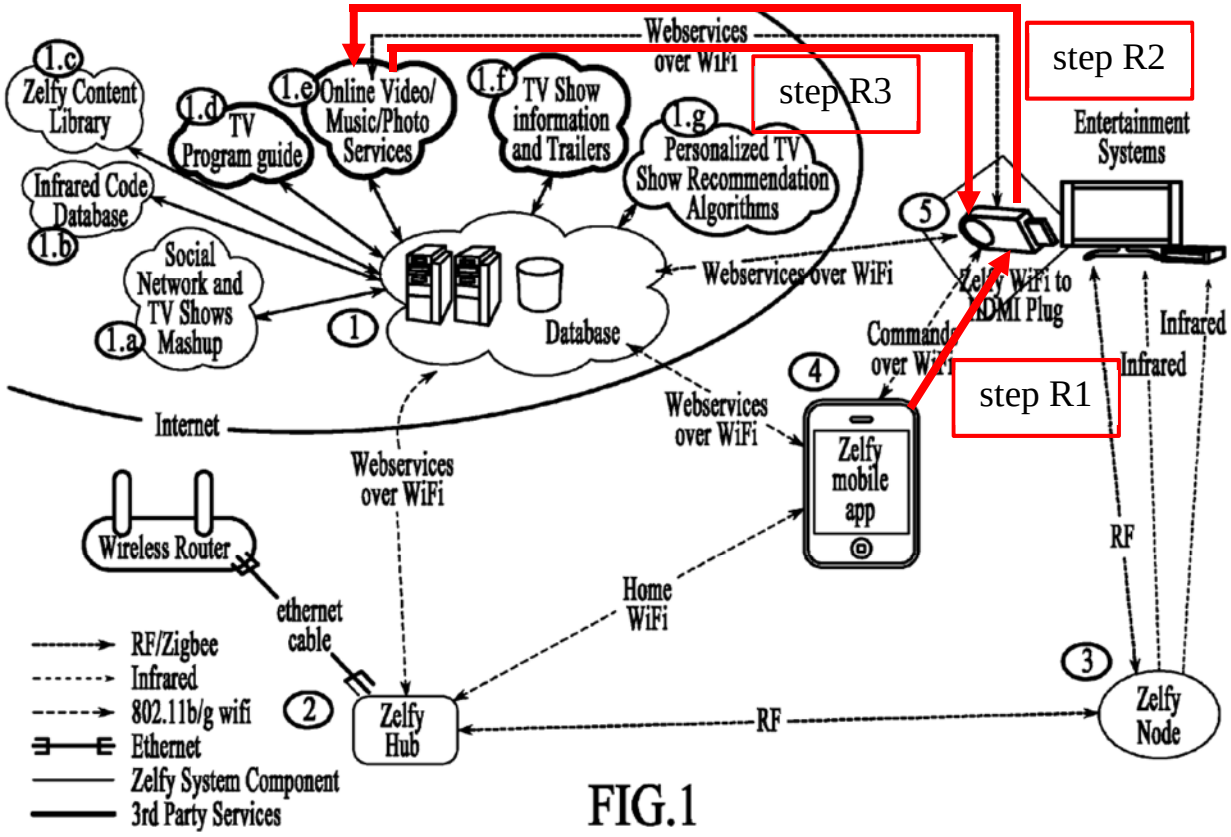

(Muthukumarasamy, Fig. 1; Ex.2022 ¶ 115)

Muthukumarasamy does not describe an alternative process for retrieving, presenting, or controlling online media content. Ex.2022 ¶ 117. Hence, an ordinary artisan would have understood Muthukumarasamy to be referring to the RCIBS process whenever it mentions streaming online or internet media content, *e.g.*, in connection with the "Zelfy WiFi HDMI Plug." *Id.*; *see* Muthukumarasamy Fig. 1 (labeling the dashed line between the IED (4) and the Plug (5) "Commands over WiFi"), Fig. 19 (listing "Commands" used for online content in the RCIBS process). Similarly, an ordinary artisan would have understood Muthukumarasamy to be referring to the RCIBS when mentioning a "browser" because the RCIBS is the only

internet browser described as part of Muthukumarasamy's DBCS. Ex.2022 ¶ 118; *see* Muthukumarasamy [0083].

By contrast, Muthukumarasamy's ZHub/zNode process controls media hardware devices, such as TVs, DVD players, cable set-top boxes, and DVRs, to deliver non-internet content. *Id.* ¶ 119; *see* Muthukumarasamy, [0056]–[0060]. That control requires using specific analog infrared signals, predetermined by each device's manufacturer at the time the device was made. Ex.2022 ¶ 119; *see* Muthukumarasamy, [0066] ("As new consumer electronic devices come into the market their respective codes are made available in this database so that the codes are available to the consumers on demand."); *id.*, [0068]–[0069], Fig. 14 (DBCS stores device model and manufacturer information).

The ZHub/zNode process begins when the IED sends a command to the zHub through a local network, *e.g.*, WiFi (step H1). Ex.2022 ¶ 120; Muthukumarasamy, [0056]–[0057]. The zHub sends a radio frequency (RF) signal to a zNode (step H2). Ex.2022 ¶ 120; Muthukumarasamy, [0039], [0057]. The zNode sends an infrared (IR) signal to the particular device with which it is paired (*e.g.*, one of the TVs in the premise) (step H3). Ex.2022 ¶ 120; Muthukumarasamy, [0058], [0060]. These steps are depicted in the annotated figure below.

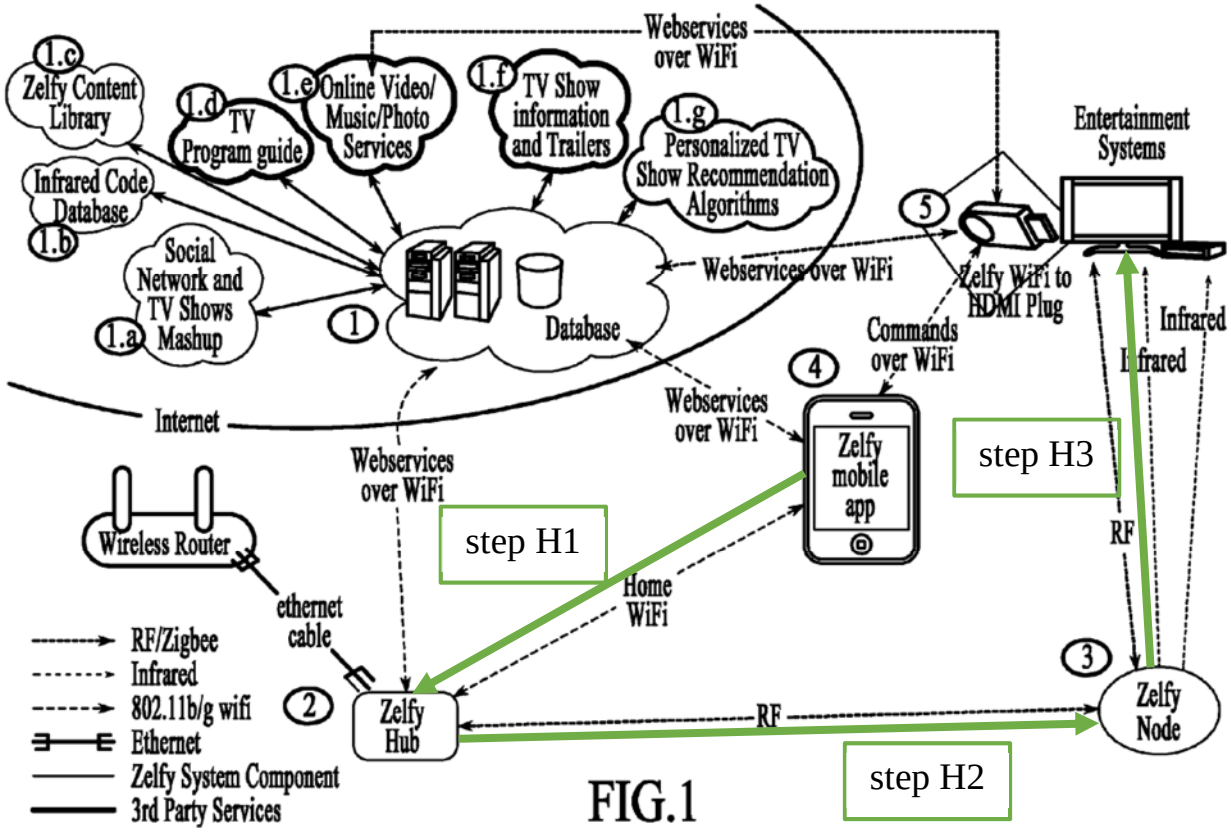

(Muthukumarasamy, Fig. 1; Ex.2022 ¶ 120)

B. Hayward

Hayward generally discloses an Internet-accessible media file index and log system that includes a database of information about media files. *See* Hayward, 4:42–46. A user at a client can search the database, which provides links to media files (which are hosted elsewhere on the Web) matching the user's search criteria. *Id.*, 4:65–5:20. If the user "clicks" a link to a video file, a script is transmitted to the client that instructs the client to retrieve an embedded media player page from customer system 122 (via the Internet). *Id.*, 5:24–28; *see id.*, Fig. 1A. Hayward discloses that the embedded media player page, which is sent to the client, includes

a reference to a functional media player object, which may already be stored on the client or which may trigger a download. *Id.*, 5:38–47. Hayward describes that "the embedded media player page is shown in a pop-up window [] generated by a browser, such as Microsoft Internet Explorer, of a client." *Id.*, 5:61–63; *see id.*, 11:9–11 (similar).

V. LEGAL STANDARDS

Petitioner bears the burden of proving unpatentability by a preponderance of the evidence, and that burden never shifts to Patent Owner. *See In re Magnum Oil Tools Int'l, Ltd.*, 829 F.3d 1364, 1375 (Fed. Cir. 2016) (citing 35 U.S.C. § 316(e), *Dynamic Drinkware, LLC v. Nat'l Graphics, Inc.*, 800 F.3d 1375, 1378 (Fed. Cir. 2015)). Where (as here) a petitioner asserts obviousness, it must prove that "the differences between the subject matter sought to be patented and the prior art are such that the subject matter as a whole would have been obvious at the time the invention was made to a person having ordinary skill in the art to which said subject matter pertains." 35 U.S.C. § 103(a) (2012). This showing requires evidence of (among other facts) "the scope and content of the prior art" and "the differences between the claimed invention and the prior art." *E.g.*, *Eisai Co. Ltd. v. Dr. Reddy's Labs., Ltd*, 533 F.3d 1353, 1356 (Fed. Cir. 2008) (quoting *Graham v. John Deere Co.*, 383 U.S. 1, 17–18 (1966)). "[T]he need to determine obviousness presumes anticipation is lacking." *Connell v. Sears, Roebuck & Co.*, 722 F.2d 1542, 1548 (Fed.

Cir. 1983). And, absent anticipation, assertions of obviousness based on a single reference require proof that "it would have been obvious to modify that reference to arrive at the patented invention." *Arendi S.A.R.L. v. Apple Inc.*, 832 F.3d 1355, 1361 (Fed. Cir. 2016).

The Board, in its analysis "should be aware . . . of the distortion caused by hindsight bias and must be cautious of arguments reliant upon *ex post* reasoning." *KSR Int'l Co. v. Teleflex, Inc.*, 550 U.S. 398, 421 (2007). "The inventor's own path itself never leads to a conclusion of obviousness; that is hindsight." *Otsuka Pharm. Co. v. Sandoz, Inc.*, 678 F.3d 1280, 1296 (Fed. Cir. 2012); *see Insite Vision Inc. v. Sandoz Inc.*, 783 F.3d 853, 859 (Fed. Cir. 2015) ("Defining the problem in terms of its solution reveals improper hindsight in the selection of the prior art relevant to obviousness.") (citation omitted).

VI. THE CHALLENGED CLAIMS WOULD NOT HAVE BEEN OBVIOUS OVER MUTHUKUMARASAMY ALONE (GROUND I) OR IN VIEW OF HAYWARD (GROUND II)

Petitioner fails to establish obviousness for multiple independent reasons. First, Petitioner relies on Muthukumarasamy's distinct RCIBS and zHub/zNode processes, each for different limitations, but neither of these two processes satisfies every limitation of independent claim 1. Petitioner does not contend, however, that it would have been obvious to modify Muthukumarasamy to combine these

processes. The proposed combination with Hayward also does not result in all the limitations being present in a single process.

Second, Muthukumarasamy does not disclose or suggest a *universal playback control command…wherein converting the universal playback control command includes selecting from among a plurality of specific commands, each of which represents a corresponding playback control command for a respective media player*, as recited in independent claim 1. Instead, Muthukumarasamy expressly discloses the alleged *universal playback control command* being context-dependent. The DBCS interprets the input differently depending on which alleged *media player* is in use.

Third, Muthukumarasamy does not disclose one system performing all the recited method steps attributed to the *server system* in the challenged claims. Rather, Muthukumarasamy discloses two systems that Petitioner merges into an alleged *server system* without adequate rationale for doing so.

A. Muthukumarasamy Describes Two Distinct Processes, Neither Disclosing the Claimed Method, and Petitioner Fails to Show Any Obvious Modification Satisfying the Claims

Petitioner fails to demonstrate obviousness because it relies on descriptions of two separate processes for different limitations in each of the challenged independent claims, and Petitioner does not contend it would have been obvious to combine them. *See Arendi S.A.R.L.*, 832 F.3d at 1361 (noting that single-reference

obviousness still requires proof it would have been obvious to modify the relied-upon reference). In particular, the Petition relies on Muthukumarasamy's discussion of both the ZHub/zNode process and the RCIBS process, using parts of each process for different limitations of the claimed methods. *See, e.g.*, Pet., 23 (citing RCIBS process for *loads any one of a plurality of different media players*). *But see id.*, 51 (citing ZHub/zNode process for *convert[ing], by the server system, into corresponding programming code*). As shown below, neither the RCIBS process nor the zHub/zNode process discloses all the limitations of the independent claims. The RCIBS process does not include either *receiving, in a server system*, the recited *signals* or *convert[ing], by the server system, into corresponding programming code* as claimed. The zHub/zNode process does not involve a *media player*, so all of the limitations reciting this term is missing. Moreover, there is no evidence that it would have been obvious to modify Muthukumarasamy (with or without Hayward) to achieve the claimed invention.

1. Petitioner Relies on Muthukumarasamy's Descriptions of Two Separate Processes

Petitioner asserts the method of each challenged claim would have been obvious based, in part, on both the RCIBS process and the zHub/zNode process, which Muthukumarasamy describes as separate, distinct alternative processes. *See* Ex.2022 ¶¶ 113-120; §IV.A.2 above. The annotated copy of Figure 1 below

illustrates components of the DBCS that Petitioner identifies for each of the ***server system***, ***personal computing device***, and ***content presentation device*** of the challenged claims.

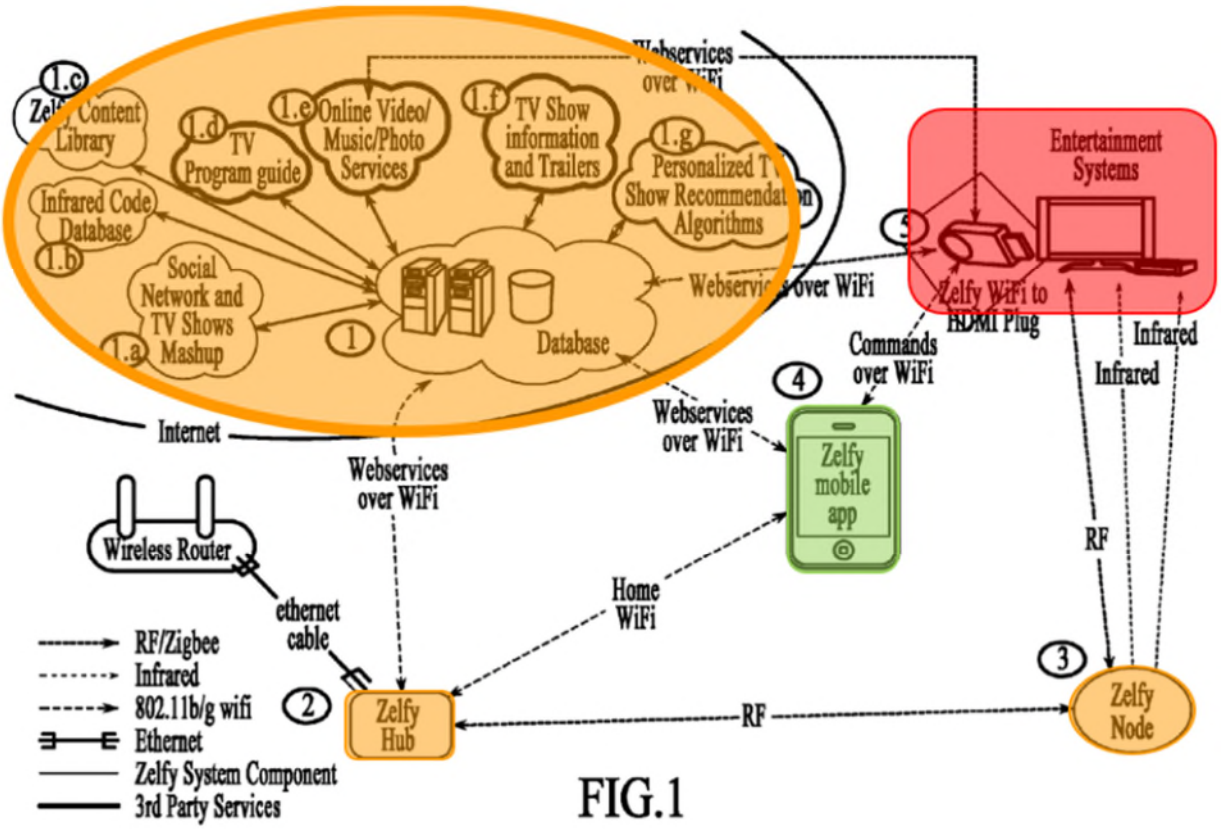

Pet., 7 (reproducing and annotating Muthukumarasamy, Fig. 1)

As shown by these annotations, Petitioner identifies Muthukumarasamy's internet server (1), zHub (2), and zNode (3) (*see* Muthukumarasamy, [0044]–[0045]), collectively, as the *server system*. Pet., 21–22, 27; Ex.1005 ¶¶ 68, 88. Petitioner identifies Muthukumarasamy's IED (4), which includes a "DBCS application or software" (Muthukumarasamy, [0044]), as the *personal computing device*. Pet., 20–22, 27; Ex.1005 ¶¶ 68, 86–88. Petitioner identifies the

"Entertainment Systems" and "Zelfy WiFi to HDMI Plug" (5) as part of the recited *display device*. Pet., 21–22, 27; Ex.1005 ¶¶ 68, 88; *see also* Ex.2021, 121:20–122:8 (testifying that the "zHDStick" in Muthukumarasamy [0045] corresponds to "Zelfy WiFi to HDMI Plug" in Fig. 1). Petitioner further identifies Muthukumarasamy's "remote-controlled internet browser software (RCIBS)" (*see* Muthukumarasamy [0083]) as part of the recited *display device*. *See* Pet., 23 ("the RCIBS[] [is] running on the display device"), 24 (annotating Muthukumarasamy Fig. 18); *See* Ex.1005 ¶ 71 (similar); *see also* Ex.2022 ¶¶116–18 (explaining the similarity in the disclosed functions of the RCIBS and the zHDStick, which Dr. Bederson identified as part of the *display device*).

The RCIBS process and the zHub/zNode process are alternative processes; only one of the two would be used in presenting any particular content. Ex.2022 ¶ 127. Muthukumarasamy describes the IED sending commands to the RCIBS over a local WiFi network in order to access and present online media content. Muthukumarasamy [0045], [0083], Fig. 1; *see* Ex.2022 ¶ 127. In contrast, Muthukumarasamy describes the IED sending commands to the zHub in order to control media devices that require infrared signals of the type used in conventional remote controls for TV sets. Ex.2022 ¶ 128; *see* Muthukumarasamy [0056]–[0060], [0066]–[0067].

Muthukumarasamy does not describe any overlapping use-cases for the two processes. There is no disclosure that the IED sends commands to the RCIBS using the zHub and/or zNode. Ex.2022 ¶ 127. Likewise, there is no disclosure that the ZHub/zNode process is ever used to access or present online (*i.e.*, Internet) media content. *Id.* Any online content presented by the DBCS would therefore use the RCIBS process. *Id.* Muthukumarasamy also does not disclose using the RCIBS to present any non-internet content, *e.g.*, cable TV channels, or to control local media devices. *Id.* ¶ 127.

Comparing Muthukumarasamy's disclosure to the claimed invention as a whole reveals fatal deficiencies in Petitioner's Grounds. *See Univ. of Strathclyde v. Clear-Vu Lighting LLC*, 17 F.4th 155, 162 (Fed. Cir. 2021) ("We decline Clear-Vu's invitation to read the inactivation limitation in isolation, divorced from the claim as a whole."). For example, Petitioner argues that "Muthukumarasamy discloses that its display device <u>loads any one of a plurality of different media players using the RCIBS</u> because it discloses loading one of a plurality of video players." Pet., 23 (underline added). Petitioner does not rely on the zHub/zNode process for *load[ing] any one of a plurality of different media player*. *See id.*, 20–27. Petitioner therefore relies on a *particular media player* allegedly loaded in the RCIBS during the RCIBS

process and does not contend that any *particular media player* is loaded during the zHub/zNode process.

Despite this, Petitioner does contend that the zHub/zNode process for *converting, by the server system, the universal playback control command into corresponding programming code to control playing of the video content on the display device by the particular media player* that is **never loaded** in the zHub/zNode process. Pet., 48–51; *see* Ex.2022 ¶ 130. (Petitioner does not rely on the RCIBS process for this step at all. *See* Pet., 48–51.)

Furthermore, Petitioner relies on the zHub/zNode process for *receiving, in the server system, one or more signals from the personal computing device*, Pet., 34–35, but cites the RCIBS process (and general disclosure relating to internet content) for the requirement that these signals *identify[] a particular media player for playing the video conten*t. *Id.*, 37–38. As shown below, the RCIBS process does not include *receiving, in the server system, one or more signals from the personal computing device*, and the zHub/zNode process does not involve *media players*. *See* §VI.A.2.a) below. This combines the sender and recipient of messages in the zHub/zNode process with information used in the unrelated RCIBS process (Ex.2022 ¶ 131), and Petitioner does not even try to justify this combination. *See* Pet., 34–35, 37–38.

Accordingly, even if Muthukumarasamy disclosed each of the claim limitations (which it does not, as discussed below), Petitioner still fails to explain why an ordinary artisan would have modified the arrangement in Muthukumarasamy to arrive at the claimed invention, as required. *See Arendi*, 832 F.3d at 1361. Because Petitioner relies on the unsupported combination of features from two different portions of Muthukumarasamy, the Petition fails.

2. Neither the RCIBS Process nor the zHub/zNode Process Discloses All the Limitations of the Challenged Independent Claims

Petitioner does not appear to contend that either the RCIBS process or the zHub/zNode process alone would render obvious the challenged claims. *See generally* Pet., 20–63(addressing independent claim 1). To the extent Petitioner does assert such an argument, though, it fails. As shown below, neither process discloses or renders obvious all the limitations of independent claim 1.

a) The RCIBS process does not render the challenged claims obvious, even in view of Hayward

Petitioner fails to show that the claimed methods would have been obvious over Muthukumarasamy's RCIBS process, whether combined with Hayward or not. Ex.2022 ¶¶ 134-146. First, the RCIBS process does not include any messaging from the IED to the alleged *server system*. Ex.2022 ¶¶ 135-138; *see* Muthukumarasamy, [0083], Figs. 18–19; Pet., 27–33; Ex.1005 ¶¶78–85. Furthermore, Petitioner does

not even allege that the RCIBS process satisfies all the limitations of the challenged claims. *See* Pet., 65-69; Ex.2022 ¶¶139-141. The proposed combination with Hayward does not cure these deficiencies. *See* Ex.2022 ¶¶142-146.

(i) The RCIBS process does not involve the alleged server system. Muthukumarasamy's RCIBS process does not disclose or suggest the step of *receiving one or more signals from the personal computing device* in the components identified by Petitioner as the *server system*, as recited in each independent claim. Ex.2022 ¶¶ 135-138. According to Petitioner's own mapping, Muthukumarasamy's "remote-controlled internet browser software (RCIBS)" (Muthukumarasamy, [0083]) is part of the alleged *display device*. *See* Pet., 21–23; Ex.1005 ¶ 71 (similar). The Board, in its Institution Decision, confirmed this understanding of the Petition and "question[ed]" "the sufficiency of Petitioner's argument" based on the RCIBS. Paper 10, 21. Those doubts were justified because Petitioner's argument is contrary to the evidence.

Petitioner identifies Muthukumarasamy's IED as the *personal computing device* of the claims and Muthukumarasamy's internet server, zHub, and zNodes, collectively, as the *server system*. *E.g.*, Pet., 27. Any messages from the IED to the RCIBS, including those in Figure 19, would not use the internet server, zHub, or zNodes because they are transmitted directly to the RCIBS via the user's home

network. *See* § IV.A.2 above; *see also* Ex.2022 ¶¶ 114-18. These messages are sent and received at step R1, indicated in the annotated figure below. Ex.2022 ¶ 135. As the figure shows, none of the messages in step R1 are *received* <u>in the alleged *server system*</u> of Petitioner's mapping. *Id.*

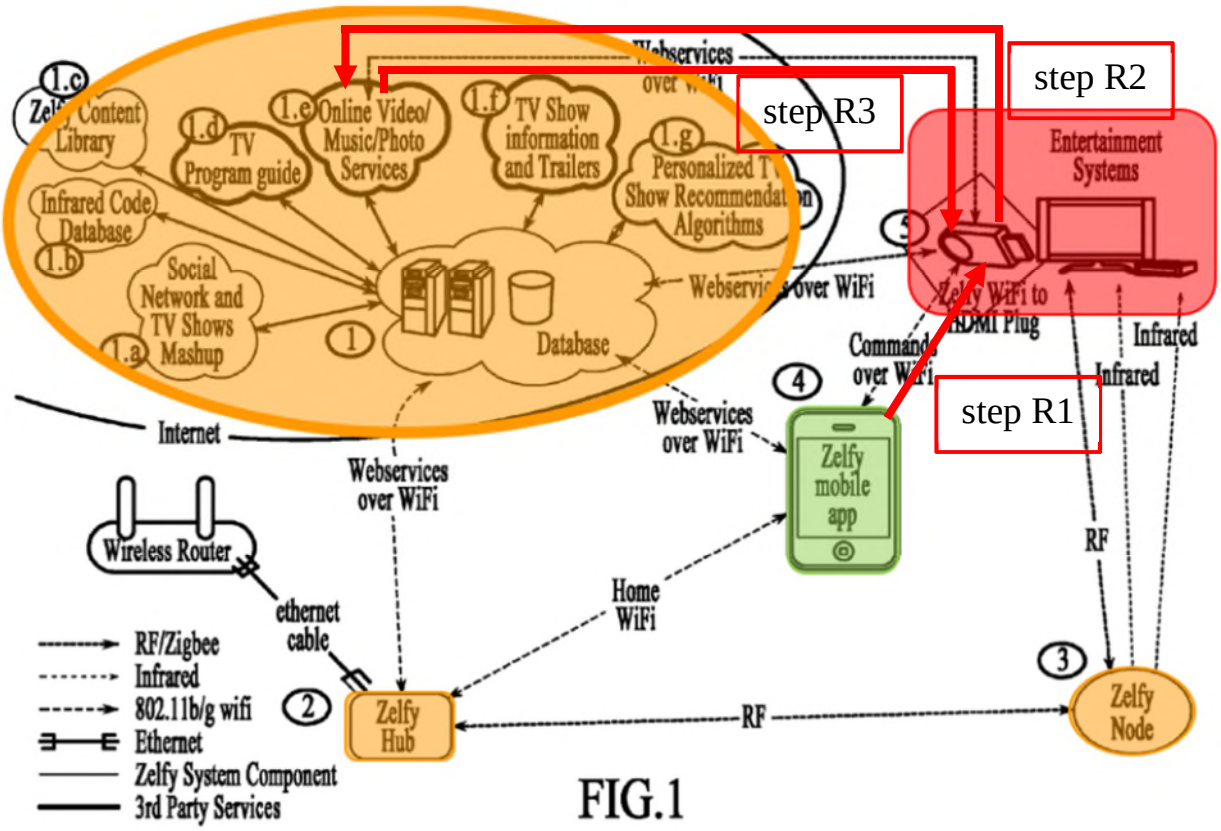

Ex.2022 ¶ 135; *see* Pet., 7 (reproducing and annotating Muthukumarasamy, Fig. 1)

The "Commands" listed in Figure 19 of Muthukumarasamy are the only disclosed "signals" involved in the RCIBS process. *Id.*, 10. Petitioner never alleges that any other signals related to the operation of the RCIBS are *received in the server system*, as recited in claim 1. *See* Pet., 38, 44–46.Because these *signals* are *received* in the alleged *content presentation device* from the alleged *personal computing*

device, Petitioner fails to show that the RCIBS process satisfies the limitations of the claims. Ex.2022 ¶ 136.

Petitioner also alleges that Muthukumarasamy generally discloses "'stream[ing] internet content over WiFi' into a browser-based media player." Pet., 38 (citing Muthukumarasamy, [0045]) (alteration in original). But this disclosure is just a reference to the RCIBS, which "is remote controllable internet browser software optimized for internet-media consumption." Muthukumarasamy [0083]; Ex.2022 ¶ 118 ("[A]n ordinary artisan would have understood Muthukumarasamy to be referring to the RCIBS when mentioning a 'browser' because the RCIBS is the only internet browser described as part of Muthukumarasamy's DBCS."). Petitioner even admits that the general disclosure in paragraph [0045] regarding "internet content" is provided by the RCIBS, using the commands in Figure 19. *See* Pet., 38 ("To this end, Muthukumarasamy's IED sends commands to play, through the RCIBS, media content 'as specified by 3rd party using 3rd party APIs and Video Players.'") (quoting Muthukumarasamy, Fig. 19) (underline added). Moreover, Muthukumarasamy does not disclose any mechanism for streaming internet content besides the RCIBS. *See* Ex.2022 ¶ 117, 137. Muthukumarasamy's general disclosures about internet content are therefore cumulative of the disclosed RCIBS process; they do not supply any of the missing claim limitations. *See id.*

Muthukumarasamy's RCIBS process therefore does not disclose or suggest the limitations of the *receiving* step of claim 1.

(ii) Muthukumarasamy's RCIBS process does not disclose or suggest the "programming code" limitations. Petitioner also fails to show obviousness based on the RCIBS process because there is no evidence that the RCIBS process includes the steps reciting *programming code*. Petitioner never identifies any part of the RCIBS process for the claims' requirement of *converting, by the server system, the universal playback control command into corresponding programming code*. *See* Pet., 65–69 (citing the operation of the zHub/zNode process). Thus, the RCIBS process does not disclose or suggest the "programming code" limitations..

Petitioner asserts (albeit incorrectly, *see* §VI.A.2.b)(ii)) that *converting, by the server system, the universal playback control command into corresponding programming code* is satisfied by Muthukumarasamy's disclosure relating to radio and infrared signals in the ZHub/zNode process. Pet., 65–69.

(iii) Hayward's alleged teachings do not change the conclusion of nonobviousness. Petitioner asserts that an ordinary artisan would have been motivated to implement the RCIBS of Muthukumarasamy using embedded media player pages, as taught by Hayward. *See* Pet., 15–16, 26–27, 40, 46–47, 57; *see also*; Ex.1005 ¶¶ Ex.1005 ¶¶59–60, 76, 102, 111, 127. This proposed combination does

not cure the defects in Petitioner's obviousness case because (as shown above) the disclosed processes that use the RCIBS do not involve the components alleged to be part of a *server system*. *See also* §IV.A above. Petitioner has not identified any other way of combining Hayward's embedded media player pages with Muthukumarasamy. *See* Ex.2022 ¶ 145. *See generally* Pet., 15–20, 24–27, 38–41, 46–48, 51–52, 56–58, 62–63.

Petitioner does not contend that this proposed combination would change the fact that the RCIBS is controlled by commands from the IED that are received by the RCIBS (identified as part of the *display device*) and not the alleged *server system*. Ex.2022 ¶ 143. In fact, Petitioner never explains whether or how the proposed combination would change the asserted mapping of claim elements. *Id*. It thus appears the RCIBS would continue to be part of the alleged *display device*, and (as shown above) the identified signaling would still not satisfy the limitation of *receiving, <u>in the server system</u>, one or more signals <u>from the personal computing device</u>*. Petitioner cannot now introduce an argument that this mapping would change in the proposed combination. *See* 37 C.F.R. § 42.23(b). Moreover, Petitioner relies on the RCIBS being the part of the *display device* alleged to *load media players*, so any change to that mapping would still result in a conclusion of nonobviousness. Ex.2022 ¶ 144; Pet., 38.

Even if there were a change in the mapping, there is no basis to conclude the RCIBS would become part of the alleged *server system*. Ex.2022 ¶ 144. Hayward's client, like the computer hosting Muthukumarasamy's RCIBS, uses "an Internet browser" to access online content. *Id.* (citing Muthukumarasamy [0083]; Hayward, 4:9–13). And Petitioner identifies the client as a *personal computing device*. *See* Pet., 38.

Accordingly, the combination with Hayward does not satisfy the limitations reciting a *server system*. For at least this reason, Petitioner fails to show obviousness based on the combination of Muthukumarasamy and Hayward. *See* Ex.2022 ¶¶ 142-146.

b) The zHub/zNode process does not render obvious the challenged claims

Muthukumarasamy's zHub/zNode process does not satisfy all the limitations of the challenged claims. The zHub/zNode process is directed to controlling diverse media presentation hardware. The claimed invention solves a different problem (*see* §I above), and this results in a mismatch between Muthukumarasamy's disclosure and the specific limitations recited in the claims. Specifically, as addressed below, Muthukumarasamy's zHub-related disclosure does not disclose or suggest the limitations of the steps relating to the recited (1) *particular media player* and (2) *programming code*.

(i) Muthukumarasamy's zHub/zNode Process Does Not Disclose or Suggest the Recited Steps Relating to a Particular Media Player. Muthukumarasamy does not disclose or suggest the steps of the claimed method relating to a *particular media player*. First, under the correct construction, a "media player" is a software application, but Muthukumarasamy's zHub/zNode process serves only to control hardware devices. Hence, no *media player* is *identified* by *signals received* in the alleged *server system*. Second, regardless of claim construction, Muthukumarasamy's zHub/zNode process does not include *loading* any alleged *media player in the content presentation device*.

1. Muthukumarasamy does not disclose or suggest any *signals* in the zHub/zNode process that *identify a particular media player*, when "media player" is properly construed to require a software application. Ex.2022 ¶ 148. Notably, Petitioner does not assert any specific disclosure of such *signals*, arguing instead that "a POSA would have understood each request for particular content to identify a media player associated with the particular source of the content." Pet., 37; *see* Ex.1005 ¶100 (similar). But the content sources relevant to the zHub/zNode process are devices located on the premise, *e.g.*, a set-top box is a "source" for cable content, and there is no separate "media player associated with" those sources. Ex.2022 ¶ 149; Muthukumarasamy [0068].

In Muthukumarasamy's DBCS, the devices at a premise are characterized by their "core functions," which can include being sources for video or audio content. Muthukumarasamy [0068]; *see id.* Fig. 14 (depicting "a logical representation of a media device" including "Functions this device can do"). Muthukumarasamy also discloses that the DBCS records information regarding the particular device that a "TV signal plug[s] into," which may be a set-top box ("STB") with DVR, an STB, or a TV. *Id.* Fig. 15/6; *see* Ex.2022 ¶ 150.

Muthukumarasamy provides an example: "when a user selects content that is on channel 324 to be displayed on the living room TV, the zHub translates the command into a specific RF signal directed at the zNode in the living room." Muthukumarasamy [0057]. The "source" in this example is whatever device the TV signal plugs into. Ex.2022 ¶ 151 (citing Muthukumarasamy [0057], [0068]–[0069], Fig. 15/6). And the "command" may identify that hardware device, but it would not identify any software application that might qualify as a *media player*. *Id.*

This example is representative of the zHub/zNode process and how Muthukumarasamy describes using it. *Id.* ¶ 152. Muthukumarasamy describes a number of content sources, *e.g.*, "subscription media, broadcast media, cable, DVR, VOD," that are all delivered using dedicated hardware. Muthukumarasamy [0047]; *see* Ex.2022 ¶ 152 ("Apart from 'broadcast media,' which can use a TV antenna,

these types of content would all be provided through a set-top box, often provided by a cable company."). Muthukumarasamy also describes content from "internet media," but Muthukumarasamy describes using the RCIBS process for internet media content. Muthukumarasamy [0047], [0083], Figs. 18–19; Ex.2022 ¶ 117; *see* §IV.A.2 above. Muthukumarasamy never describes using the zHub/zNode process for internet media. Ex.2022 ¶ 128, 152; *see* Muthukumarasamy [0056]–[0060].

Accordingly, the *signals received* in the alleged *server system* do not *identify a particular media player*, as correctly construed. Ex.2022 ¶ 153.

2. Even if "media player" is not construed to require a software application, Muthukumarasamy still does not disclose all the limitations associated with the *particular media player*. Ex.2022 ¶ 154. As explained in the previous subsection, the commands from the IED to the zHub would (at most) identify hardware devices, such as set-top boxes and TVs. Even if these devices could be considered *media players* (under an incorrect construction), Muthukumarasamy never discloses a set-top box, TV, or other device being *loaded in a content presentation device*. *Id.*

Indeed, Petitioner fails to explain what it would even mean to "load" media devices "in" other media devices. *See* Pet., 22–23 (arguing generally that "a POSA would have understood the media device to load an appropriate media player

depending on the media type and source"). Petitioner's reliance on Muthukumarasamy's general disclosure of internet media is unavailing because, as explained above, Muthukumarasamy discloses using the RCIBS process for internet media.

Petitioner also cannot rely on Muthukumarasamy's disclosure relating to the RCIBS process for this limitation. *See* Ex.2022 ¶ 135-138. The RCIBS process does not include *receiving signals* in the alleged *server system identifying a particular media player*. *See* §VI.A.2.a) above. Because no *particular media player* is identified in the required manner as part of the RCIBS process, that *particular media player* of the claims also cannot be *loaded in the content presentation device*. Ex.2022 ¶ 156.

Accordingly, Muthukumarasamy does not disclose or suggest *load[ing] any one of a plurality of different media players.*

(ii) Muthukumarasamy's zHub/zNode process does not disclose or suggest the recited steps relating to programming code. Muthukumarasamy does not disclose performing the claim steps that recite *programming code* because the alleged "codes" are not *programming code*. Under the correct construction, *programming code* requires "computer program instruction(s) encoded for

execution by a data processing apparatus (such as a computer processor)." *See* Ex. 2022 ¶¶ 157-170. The challenged claims recite (in part):

> converting, by the server system, the universal playback control command into corresponding <u>programming code</u> to control playing of the video content on the display device by the particular media player…
>
> storing, in a database associated with the server system, information for transmission to or retrieval by the display device, wherein the information specifies the video file to be acted upon, identifies the particular media player for playing the video content, and includes the corresponding <u>programming code</u> to control playing of the video content on the display device by the particular media player in accordance with the universal playback control command.

Ex. 1001, 11:43–60 (underline added). For the *converting, by the server system, the universal playback control command into corresponding programming code* step, Petitioner relies on Muthukumarasamy's zHub/zNode process. *See* Pet., 48–50. In particular, Petitioner cites Muthukumarasamy's description of commands being translated into radio (RF) and infrared (IR) signals. Neither of these signals are the *programming code* that the claims require. Ex. 2022 ¶ 157.

First and foremost, Muthukumarasamy's RF and infrared signals are not *programming code* at all. *Id.* Instead, each is an analog signal for transmission

between devices. *Id.* ¶ 160. For example, Muthukumarasamy expressly discloses that the "infrared (IR) codes" discussed in Muthukumarasamy are sequences of infrared pulses. Muthukumarasamy, [0067]; *see* Ex.2022 ¶ 160. Each "IR code" consists of a sequence of "marks" (when infrared light is emitted) and "spaces" (when no light is emitted) at some frequency. Ex.2022 ¶ 160; *see* Muthukumarasamy [0067]. Pulses of light are not computer program instructions that can be executed, as required by the properly construed claim. Ex.2022 ¶ 160. Indeed, the '251 patent distinguishes between "program instructions" and a storage medium or signal, respectively used to store or transmit instructions. *Id.*; *see* Ex.1001, 9:40–65. For the same reasons, RF signals are not themselves *programming code*. Ex.2022 ¶ 161.

There is also no evidence that either of Muthukumarasamy's RF and IR signals are used to <u>transmit</u> the *programming code* (to the extent the Petition asserts that theory). *See* Ex.2022 ¶ 162. First, Muthukumarasamy's IR signal (or "IR code") does not convey any computer program instructions for execution using a data processing system. *Id.* Rather, an IR code conveys no information other than its own identity, based on its particular "frequency and Mark-Space timing[]." *Id.*; *see* Muthukumarasamy, [0067]; Ex.2021, 58:14–61:12. A device receiving an IR code may be designed by its manufacturer to respond in some specified way to a particular IR code. Ex.2022 ¶ 163; *see* Muthukumarasamy, [0067]; Ex.2021, 59:18–61:12. But

in that situation, an ordinary artisan would not have understood the IR code to be *programming code* because the IR code itself is not a computer program instruction, nor does a processor execute it. Ex.2022 ¶ 163. At most, a receiving device might be designed to identify and execute some instruction upon receiving a given IR code, but Muthukumarasamy does not expressly disclose this implementation. *Id.* Even if Muthukumarasamy did disclose this, it still would not satisfy the *converting* step because the alleged *server system* would not be doing the *converting*, and because the IR code is neither an universal playback *control command* nor independent of the alleged *media player*. *Id.* ¶ 164.

Moreover, the RF signal transmits the series of numbers associated with the desired infrared code. Ex.2022 ¶ 165 (citing Muthukumarasamy, [0059], [0066]); *see* Muthukumarasamy, [0057] ("[T]he ZHub resolves or maps the command to a specific IR code to be sent to a specific ZNode via an RF signal."). Because the IR code is not *programming code*, neither is the RF signal.

To the extent Petitioner relies on Muthukumarasamy's statement that, "the ZHub receives the command from the IED and resolves the command into a specific instruction directed at a specific ZNode in the house" (Muthukumarasamy, [0057]), that statement does not disclose *programming code* meeting any of the necessary limitations of the claims. Ex.2022 ¶ 166. On its face, this instruction is "directed at

a specific zNode" and not at the alleged *display device* or at any *particular media player*. *Id.* (citing Muthukumarasamy, [0057]). An ordinary artisan would have understood this "instruction" would direct the specific zNode to transmit the IR signal mentioned in the following sentence. *Id.* Thus, the "instruction" is executed by the zNode, not by or using a *particular media player*, and it does not *control presentation of the content on the display device by the particular media player*. *Id.* ¶ 166.

Furthermore, Dr. Bederson's opinion that Muthukumarasamy's IR codes constitute programming code is irreconcilable with his deposition testimony about the disclosure of the '251 patent. *See* Ex.2021, 92:20–99:6, 100:1–101:8; Ex.2022 ¶ 167. The '251 patent discloses an embodiment in which an adapter (26) "converts the incoming commands from the mobile device 20 into the correct JavaScript (or other programming) code used by the target device 22 to control the specific player." Ex.1001, 5:67–6:3; *see* Ex.2022 ¶ 167. The patent further describes this adapter (26) being implemented "as a look-up table," as depicted in Figure 5. Ex.1001, 6:7–9; Ex.2022 ¶ 167. As shown in Figure 5, the adapter converts an incoming "Universal Command" into a "Player Specific Command" corresponding to the "JavaScript (or other programming) code" described at column 5, line 67 to column 6, line 3. Ex.2022 ¶ 167.

26

Universal API Adapter		
Universal Command	MediaPlayerID	Specific Player Command
New Video	YouTube	yt_loadVideo
	Ted.com	getVideo
	Vimeo	loadNewVideo
Pause	YouTube	yt_pauseVideo
	Ted.com	pauseVideo
	Vimeo	pause

FIG. 5

(Ex.1001, Fig. 5)

When asked whether the "Specific Player Commands" in Figure 5 are examples of *programming code*, Dr. Bederson was evasive. Ex.2021, 87:21–89:22, 90:8–92:16. The closest he came to answering the question was to say that the "Specific Player Commands" in Figure 5 "could be <u>part of</u> programming codes in JavaScript." *Id.*, 88:19–89:2 (underline added). There is no coherent interpretation of "programming code" that excludes the JavaScript commands in Figure 5—the disclosed examples of the claimed programming code—while encompassing a sequence of flashing lights. *See* Ex.2022 ¶ 168-69. Dr. Bederson's opinion that Muthukumarasamy's IR codes are *programming code* (as recited in the claims) lacks credibility.

Accordingly, Petitioner fails to show that either the RF signals or "infrared (IR) code" of Muthukumarasamy's zHub/zNode process is the *programming code* required in the claimed method.

(iii) Petitioner's proposed combination with Hayward (Ground II) does not cure the deficiencies of Petitioner's theories using the zHub/zNode process. Petitioner proposes using Hayward's embedded media player pages in the implementation of Muthukumarasamy's RCIBS. *See* Pet., 15–16, 26–27, 40, 46–47, 57; *see also* Ex.1005 ¶¶59–60, 76, 102, 111, 127; § VI.A.2.a) above. Neither Petitioner nor Dr. Bederson have identified any alternative combinations or explained how they would have worked. *See* Ex.2022 ¶ 171-72. *See generally* Pet., 15–20, 24–27, 38–41, 46–48, 51–52, 56–58, 62–63; Ex.1005 ¶¶ 59–64, 73–76. Indeed, as Dr. Almeroth explains, there is no evidence suggesting Hayward's embedded media player pages would work outside the context of an internet browser application. Ex.2022 ¶ 172; *see* Hayward, 4:4–8, 4:67–5:4, 5:17–20, 5:59–63, 11:9–1. The RCIBS is the only internet browser application described by Muthukumarasamy for use in the DBCS. Ex.2022 ¶ 118, 172.

Hence, the Petition fails to identify any theory for combining the teachings of Hayward with Muthukumarasamy's zHub/zNode process, providing an additional reason why Ground II fails to demonstrate obviousness.

B. Muthukumarasamy Does Not Disclose or Suggest Converting the Universal Playback Control Command Includes Selecting from among a Plurality of Specific Commands That Correspond to a Respective Media Player

Muthukumarasamy does not disclose or suggest any *signals received in* the alleged *server system* from the IED that include an *universal playback control command…wherein converting the universal playback control command includes selecting from among a plurality of specific commands, each of which represents a corresponding playback control command for a respective media player*, as recited by the claims. Ex.2022 ¶ 174-78. For the *universal playback control command*, Petitioner relies on Muthukumarasamy's disclosure of "contextual gesture-based control[s]." Pet., 51 (quoting Muthukumarasamy [0050]). Because these controls are "contextual," they do not *correspond* to *a respective media player*, as the claims require. Ex.2022 ¶ 175.

For example, Muthukumarasamy discloses that a user's tap on a touchscreen of the IED might be interpreted as a command to pause a DVD player. Muthukumarasamy [0051]. The same input would be interpreted as a command to "mute" a live TV program. *Id.*, Fig. 4. The meaning of the user's tap is therefore dependent on the particular type of hardware device being controlled. Muthukumarasamy [0052]; Ex.2022 ¶ 176. Thus, to the extent that these devices can be considered *media players* (which, under the correct construction, they cannot),

the "tap"and other gesture-based controls still do not satisfy the claims' requirement that the *universal playback control command includes selecting from among a plurality of specific commands, each of which represents a corresponding playback control command for a respective media player*, as claimed. Ex.2022 ¶ 176.

Petitioner also relies on Muthukumarasamy's RCIBS-related disclosure (Pet., 44–46) and the combination of Hayward's teachings with the RCIBS (*id.*, 46–48). As addressed above, Muthukumarasamy's RCIBS process does not include *receiving signals* in the alleged *server system*, so any alleged *universal playback command* sent as part of this process would also not meet the limitations of the *universal playback control command*. Ex.2022 ¶ 176.

C. Petitioner Fails to Prove That an Ordinary Artisan Would Have Considered the zHub and zNode Part of a *Server System* with Muthukumarasamy's Server

Petitioner's obviousness grounds fail because they rely on Muthukumarasamy's "internet server" and its "media control network" (*i.e.*, the zHub and zNodes at a premise) collectively comprising the alleged *server system*. Petitioner cites each of these two systems for different *server system* limitations of the independent claims, but Muthukumarasamy does not describe the internet server and the media control network as being a single "system" within the overall system of the DBCS. Ex.2022 ¶ 179-88. Muthukumarasamy refers to the zHub and zNode(s) "present at a premise . . . as a media control network." Muthukumarasamy [0044].

Muthukumarasamy separately describes the internet server with a variety of functions (1A–1G). *Id.* [0045]. The internet server is not described as being part of the media control network, however. Ex.2022 ¶ 181.

Petitioner's argument for treating the two systems as a single alleged *server system* based on some purportedly shared function fails because the relied-upon function is performed entirely by the media control network. *Id.*; *see* Pet., 27–28 (citing Ex.1005 ¶¶78–79; Muthukumarasamy [0057], [0044], Fig. 1). Contrary to Petitioner's argument, the zHub/zNode network and the internet server do **not** "work together as a server system to receive messages and commands from the IED and relay corresponding commands to control the media device." Pet., 27. The device-control function is performed by the "media control network," *i.e.*, the zHub and zNodes. Muthukumarasamy [0044], [0056]–[0060]; *see* Ex.2022 ¶ 183. The paragraphs on which Petitioner (and Dr. Bederson) rely confirm that the identified functions reside in the zHub and zNodes and not the "internet server." *See* Ex.2022 ¶ 183 (citing Muthukumarasamy [0044], [0057]).

Likewise, Petitioner argues that the alleged *server system* of Muthukumarasamy is "similar to the server system described by the '251 Patent, which comprises multiple hardware components ('251 Patent, 1:44-50), receives commands from the personal computing device, such as a smartphone, and relays

corresponding commands to control a display device, such as a TV." Pet., 28 (citing Ex.1005 ¶79). Again, this argument focuses entirely on the functions of the zHub/zNode network. Neither Petitioner nor Dr. Bederson cite any disclosure in Muthukumarasamy that the internet server "receives commands from the [IED]" or that it "relays corresponding commands to control a content presentation device." *Id.*; *see* Ex.2022 ¶ 184.

The only system in Muthukumarasamy that includes both the internet server and the media control network is the system of the entire DBCS, which also includes the IED and the RCIBS, components identified as the *personal computing device* and *display device* of the claims. Ex.2022 ¶ 185; *see* Muthukumarasamy [0044], [0046], [0083]. Petitioner's merger of the internet server and media control network is therefore **not** based on the disclosure of Muthukumarasamy, but on the alleged similarity to the '251 patent alone. Ex.2022 ¶ 186. As such, the argument reeks of impermissible hindsight. *See id.*

Without any basis for combining the functions of the internet server and the media control network into one alleged *server system*, Petitioner cannot show that Muthukumarasamy discloses all the claimed steps that must be performed by the *server system*. In particular, Petitioner points to the operation of the "device map database" of the internet server for limitations relating to the *synchronization code*.

Pet., 29–30; *see* Muthukumarasamy [0045], [0068]–[0069], Figs. 1, 13–15. But Petitioner relies on the operation of the zHub and zNodes for limitations relating to the *universal playback control command* and *programming code*. Pet., 43, 49–50; *see* Muthukumarasamy [0044], [0056]–[0060]. The claims require, however, that ***the*** *server system* be used in certain operations.

Muthukumarasamy does not disclose that the internet server and the media control network are part of a *server system* that is *separate from the personal computing device*, and Petitioner relies on hindsight to argue that they would be obvious to combine into a single system. Ex.2022 ¶ 188.

D. Claims 2, 5, 6–8, 9 Would Not Have Been Obvious

Claims 2, 5, 6–8, and 9 depend from claim 1. For all the reasons discussed above with respect to claim 1, Petitioner fails to show any of these dependent claims would have been obvious over the csited references. *See* Ex.2022 ¶ 189.

VII. CONCLUSION

For at least the foregoing reasons, Patent Owner respectfully requests that the Board confirm patentability of claims 1, 2, 5, 6–8, 9 of the ’251 patent.

Dated: January 13, 2023

Respectfully submitted,

By: /Sharon A. Israel/
Sharon A. Israel
Lead Counsel for Patent Owner
Registration No. 41,867
SHOOK, HARDY & BACON L.L.P.

600 Travis Street, Suite 3400
Houston, TX 77002
Phone: 713-546-5689
Email: sisrael@shb.com

Kyle E. Friesen
Back-up Counsel for Patent Owner
Registration No. 65,371
SHOOK, HARDY & BACON L.L.P.
600 Travis Street, Suite 3400
Houston, TX 77002
Phone: 713-546-5671
Email: kfriesen@shb.com

CERTIFICATE OF SERVICE

Pursuant to 37 CFR § 42.6(e), the undersigned certifies that on January 13, 2023, complete and entire copies of this Patent Owner's Response and Exhibits 2021–2023 were provided via email to Petitioner's counsel of record as follows:

Erika H. Arner
erika.arner@finnegan.com
Finnegan, Henderson, Farabow, Garrett & Dunner, LLP
1875 Explorer Street, Suite 800
Reston, VA 20190-6023

Kara A. Specht
kara.specht@finnegan.com
Finnegan, Henderson, Farabow, Garrett & Dunner, LLP
271 17th Street, NW, Suite 1400
Atlanta, GA 30363-6209

Gracie K. Mills
Finnegan, Henderson, Farabow, Garrett & Dunner, LLP
901 New York Avenue, NW
Washington, DC 20001-4413

Misook Kim
misook.kim@finnegan.com
Finnegan, Henderson, Farabow, Garrett & Dunner, LLP
Stanford Research Park, 3300 Hillview Avenue
Palo Alto, CA 94304-1203

Service E-mail: Google-Touchstream-IPRs@finnegan.com

By: /Sharon A. Israel/
Sharon A. Israel
Lead Counsel for Patent Owner
Registration No. 41,867

CERTIFICATE OF WORD COUNT

Pursuant to 37 C.F.R. § 42.24(d), the undersigned certifies that the foregoing PATENT OWNER'S RESPONSE, according to the word-processing system used to prepare the paper and not including those parts excluded by § 42.24(a)(1), has 11,511 words, which is within the type-volume limit set by § 42.24.

By: /Sharon A. Israel/
Sharon A. Israel
Lead Counsel for Patent Owner
Registration No. 41,867