		"20030043191" "20140259166" "20110231872" "20060190616" "7698178" "7086946" "20100049835" "7844498" "8468369" "8753199" "8731371" "20050262449" "20100125646" "8713026" "20110029873" "8622552" "20070067241" "8401187" "20040267899" "8230044" "20020112004" "20070087838" "20020138593" "8359591" "20020055386" "20120033140" "8393948" "20110181518" "20060230038" "20110028221" "7596582" "20120226780" "8353757" "20070299874" "7539307" "20060036488" "20070101361" "20020098885" "20100161825" "20080113614" "20040032348" "20100042654" "20090259926" "6888477" "20120210373" "20080288098" "20070055997" "20030084126" "8725063" "20060080741" "20070236482" "20140033025" "8996145" "20090117846" "20080176540" "7984511" "7636754" "20090100092" "20060041640" "7644173").pn.				
S13	100	("8429365" "20040259621" "8239595" "20110149158" "20020190876" "8608536" "7761414" "20100036748" "20090136029" "7113999" "8282479" "8930561" "7802004" "8225359" "7844722" "20080107170" "20060044951" "7796941" "7566274" "20090119169" "20050157600" "20110066776" "20110208336" "8469813" "8608537" "20040064835" "7613691" "20070291709" "8682722" "20060090122" "5839905" "8893022" "20090315670" "20070266123" "8774602" "20110317831" "20030217170" "20070237494" "20090061927" "20060059223" "9063755" "6692353" "8973083" "20060265667" "7160191" "20040117442" "6507727" "8055688" "20060232449" "20110295393" "7627343" "20110066775" "20020046095" "20040205811" "20050114205" "8413038" "8251811" "20130298154" "20090006695" "8595854" "7920901" "20090215540" "8120707" "20070132660" "8473976" "20120062471" "20090093312" "20100287480" "20060117344" "7610310" "8364024" "9055315" "20080268959" "20080086689" "20070233295" "20060206561" "8458053" "20070006065" "20060123185" "20110066673" "20090319901" "20100269030" "7920856" "8419548" "7997582" "8386414" "20100169463"	US-PGPUB; USPAT	OR	OFF	2015/07/24 06:53

		"20070260742" "20030061280" "20120192229" "8174827" "20060046851" "20080281685" "6253237" "8230097" "8632400" "7303470" "20080201751" "20080256563" "20080076495").pn.				
S14	2500	S1 S2 S3 S4 S5 S6 S7 S8 S9 S10 S11 S12 S13	US-PGPUB; USPAT	OR	OFF	2015/07/24 06:54
S15	1037	((display near2 (device or apparatus or terminal)) or television) same (send$3 or transmi$9) same "unique identifier"	US-PGPUB; USPAT	OR	OFF	2015/07/24 06:57
S16	235	(((display or gaming or tablet or personal or laptop))near2 (device or apparatus or terminal or console or computer)) or television) same (send$3 or transmi$9) same "unique identifier" same (host or stb or PC	US-PGPUB; USPAT	OR	OFF	2015/07/24 07:02
S18	10	S16 and S14	US-PGPUB; USPAT	OR	OFF	2015/07/24 07:05
S19	0	S14 and "unique code" and "QR code"	US-PGPUB; USPAT	OR	OFF	2015/07/24 07:09
S20	9	S14 and "QR code"	US-PGPUB; USPAT	OR	OFF	2015/07/24 07:09
S21	0	S14 and television with "unique code"	US-PGPUB; USPAT	OR	OFF	2015/07/24 07:11
S22	0	S14 and television same "unique code"	US-PGPUB; USPAT	OR	OFF	2015/07/24 07:11
S23	3	S14 and display same "unique code"	US-PGPUB; USPAT	OR	OFF	2015/07/24 07:11
S24	47	S14 and display same "unique identifier"	US-PGPUB; USPAT	OR	OFF	2015/07/24 07:12
S25	2	S14 and television same "unique identifier"	US-PGPUB; USPAT	OR	OFF	2015/07/24 07:12
S26	410	S14 and "unique identifier"	US-PGPUB; USPAT	OR	OFF	2015/07/24 07:14
S27	2	S14 and "unique identifier" same television	US-PGPUB; USPAT	OR	OFF	2015/07/24 07:14
S28	47	S14 and "unique identifier" same display	US-PGPUB; USPAT	OR	OFF	2015/07/24 07:15
S29	7	S14 and "unique identifier" same display same host	US-PGPUB; USPAT	OR	OFF	2015/07/24 07:15
S30	0	S14 and humpelmann	US-PGPUB; USPAT	OR	OFF	2015/07/24 07:16
S31	0	S14 and humpelman	US-	OR	OFF	2015/07/24

			PGPUB; USPAT			07:16
S32	42	S14 and hump$9	US-PGPUB; USPAT	OR	OFF	2015/07/24 07:16
S33	2	S14 and hump$9.inv.	US-PGPUB; USPAT	OR	OFF	2015/07/24 07:17
S34	167	S14 and "thin client"	US-PGPUB; USPAT	OR	OFF	2015/07/24 07:17
S35	3	S14 and "thin client" same identifier	US-PGPUB; USPAT	OR	OFF	2015/07/24 07:18
S36	0	S14 and "thin client" same identifier same television	US-PGPUB; USPAT	OR	OFF	2015/07/24 07:19
S37	9	S14 and identifier same television same unique	US-PGPUB; USPAT	OR	OFF	2015/07/24 07:19
S38	9	S14 and QR	US-PGPUB; USPAT	OR	OFF	2015/07/24 07:20
S39	25	S14 and google.as.	US-PGPUB; USPAT	OR	OFF	2015/07/24 08:02
S40	0	S14 and hromecast	US-PGPUB; USPAT	OR	OFF	2015/07/24 08:05
S41	37	chromecast	US-PGPUB; USPAT	OR	OFF	2015/07/24 08:05
S42	12	chromecast and "unique identifier"	US-PGPUB; USPAT	OR	OFF	2015/07/24 08:07
S43	41	S1 and "unique identifier"	US-PGPUB; USPAT	OR	OFF	2015/07/24 08:07
S44	2	humpelman	US-PGPUB; USPAT	OR	OFF	2015/07/24 08:09
S45	54	("20020120666" | "20030193520" | "20070202923" | "20080008439" | "20080028037" | "20100205628" | "7424718" | "20050034151" | "20090108057" | "20030004804" | "20060083194" | "20110231265" | "7769827" | "20050144305" | "20060098624" | "20060101098" | "20070094408" | "20080267369" | "20110030020" | "20110060998" | "7058356" | "20090172780" | "20120102209" | "20020133518" | "20080126943" | "20100137028" | "20110138354" | "20110214148" | "20110296465" | "7330875" | "20100027974" | "20110131607" | "20030023488" | "20030028565" | "20100281042" | "20110090898" |	US-PGPUB; USPAT	OR	OFF	2015/07/24 08:10

		"20110107227" | "20070155506" | "20020198778" | "20060203758" | "20080270881" | "20090228919" | "0783505" | "20070288715" | "20030018885" | "20040088728" | "20080155600" | "20100265939" | "20110231566" | "7440972" | "20030005000" | "7849485" | "20080077526" | "20120059875").PN.				
S46	2	"20050246624"	US-PGPUB; USPAT	OR	OFF	2015/07/24 08:16
S47	1	"20130263011"	US-PGPUB; USPAT	OR	OFF	2015/07/24 08:22
S48	0	S14 and synchronization with code with generator	US-PGPUB; USPAT	OR	OFF	2015/07/24 08:26
S49	200	("8595342" "20100138744" "20090106357" "20080256378" "20020161797" "20100115119" "20090275403" "20130165164" "20090061841" "8631407" "8622839" "8588824" "20090282245" "20090251409" "20100313135" "8909296" "20120084653" "20110296478" "20070294292" "7996566" "7716376" "7665115" "20120158511" "8876599" "20080168568" "20080175569" "8162753" "8918812" "20110125712" "8397266" "20090177966" "20120271688" "8755521" "7849160" "20080301189" "20100118200" "8026805" "20100121693" "20070294621" "20040268400" "8517829" "20040045040" "20090133067" "8910200" "7627808" "20040252400" "7975312" "8020185" "20080114861" "7632186" "8025572" "8556722" "20040239753" "20090228897" "20070011713" "20120222064" "8069414" "8352371" "7529831" "20060173974" "20080181575" "20100177122" "20070003224" "20120166950" "20110035466" "7809790" "8175638" "7984097" "8185625" "20110258623" "20080313402" "8028064" "20070033295" "20100281508" "8055781" "20050022127" "7962548" "8909740" "8122236" "20090109339" "8046672" "7565429" "20100228975" "20070276865" "9021370" "20100332983" "20120030726" "8806340" "20070078552" "20070169087" "20040015398" "8131993" "20080120652" "20060014585" "20050034151" "8909776" "20050019015" "20060250282" "20090190902" "20080319856" "6859838" "8060407" "7949333" "8566301" "20070265073"	US-PGPUB; USPAT	OR	OFF	2015/07/25 13:44

		"20030061305" "7890599" "20070166683" "8244172" "20070100833" "8931105" "20060287021" "8752083" "20110307782" "20100325549" "8062134" "8374488" "20050091107" "8435115" "20110113354" "20130167027" "20110055026" "7787904" "20090204639" "8724696" "8949376" "20090093302" "20090176572" "7975021" "7975310" "20090285548" "7904628" "8016670" "20030182139" "20080118231" "8229856" "20100169509" "7934010" "8892988" "8209396" "7824268" "8702518" "8614625" "7460765" "20080194331" "20080180302" "8499241" "20110150432" "7739596" "20100325543" "8199718" "20110158606" "8435121" "7426537" "7761602" "20080281689" "20040051812" "8506405" "20120215646" "7892095" "20110158610" "7590752" "20130232420" "7574691" "20050210101" "8990673" "20100235741" "8756333" "7369752" "20060182421" "8463924" "20030079038" "20060068861" "8332529" "20100287308" "20100119215" "7460668" "20040133908" "8392452" "8190706" "20070117635" "20080195474" "20080148328" "7058284" "20100076578" "20060020825" "20100150520" "20040225564" "8379668" "20110282896" "20090249222" "20070239849" "20100131978" "20100180010" "20020129089" "20110022471" "20110307785" "20040064518" "6904566" "8392959").pn.				
S50	200	("8112490" "8695030" "7233668" "20060034581" "20070239611" "20080184117" "7382879" "20030225834" "8112504" "20110041060" "20090228569" "8255527" "8285404" "20020116517" "20090176568" "20120239510" "7991156" "7966411" "20090216814" "20070217716" "8968093" "20100138879" "20090307658" "20020065925" "8155714" "8265456" "7861312" "20100122165" "20090327035" "20080118063" "20070117617" "8868785" "20120251076" "8473628" "20120072543" "20060101487" "20110320402" "20090210897" "20020141741" "8161275" "20110058675" "7836511" "8112711" "20080270903" "20080005348" "20090307092" "8117323" "20080129864" "20100232771"	US-PGPUB; USPAT	OR	OFF	2015/07/25 13:44

"8938674" "20120050012"
"20130125013" "7789758"
"20090082095" "8429224"
"20040183756" "20060080702"
"20080150485" "20030233349"
"9026913" "8185626" "20040237107"
"20050062888" "20070150963"
"20100235744" "20090327969"
"7801478" "8688991" "8219911"
"20090326689" "7917932"
"20090228738" "20060168351"
"20110055702" "8123599"
"20070294773" "7867093"
"20100077463" "7941477" "7721103"
"20100297934" "20120311043"
"20060136964" "8429516"
"20030137531" "8015167" "8566442"
"7921222" "20080263219" "8244707"
"6884172" "8522299" "20140006450"
"20090024927" "8954596" "8538564"
"20040003102" "20070171903"
"20060026162" "20100104269"
"6973475" "20120158524"
"20040085485" "20100054715"
"20040133657" "8249414" "8000690"
"20060159366" "20080260295"
"20070060312" "20060088228"
"20090233705" "20110184881"
"20090164902" "20090024923"
"8229796" "7590750" "20020133247"
"20070191108" "7653928" "7496277"
"7278102" "20100319017"
"20090060452" "20090094376"
"8904455" "20080235142"
"20080031600" "8275681" "8806027"
"20120203891" "8228670"
"20060195909" "8332530"
"20110179010" "20110138018"
"8734254" "7870282" "20110179357"
"20080109550" "20100275221"
"7987483" "20100217993" "8122004"
"20080071950" "20090193153"
"7660558" "20060136577"
"20060136572" "20060015911"
"20090327561" "20100076827"
"20070288715" "20020186843"
"20070105588" "20080077679"
"20080243279" "8880491"
"20090282020" "20080212943"
"20050153776" "20110191796"
"20070075127" "8285812"
"20100306152" "8977107" "8918737"
"8650283" "20060125295" "7272794"
"20060020968" "20100131671"
"8301596" "8402494" "20070239839"
"8671440" "8632408" "20110145859"
"20070190983" "7433922"
"20100105330" "20110004517"
"20060293769" "20090288076"
"20030052913" "20100056268"
"20050182726" "7218360" "8422858"
"7627645" "20100131848"
"20020138641" "20100211466"
"20100198982" "7458894"

		"20080232763" "7922586" "20060182420" "7765326" "20100169780").pn.				
S51	200	("20090106659" "8290604" "20080288770" "20090327448" "20100023578" "8190760" "20070226384" "20070048719" "7346687" "9063638" "20090240786" "20090240830" "8230341" "8943409" "20050044189" "20110208506" "8307390" "20080146342" "8775938" "20090319599" "20090240828" "7101284" "8244663" "20100026912" "20110055864" "20100070355" "20090098943" "20080084400" "7647560" "20100150105" "20090240768" "20100082835" "20060265637" "8029364" "8868763" "7500916" "20090171715" "20070168287" "20120220222" "20050091597" "20050251732" "20110176555" "20080273077" "20030167318" "8731380" "7433546" "8949450" "9063941" "8370520" "20090106315" "7050124" "20080046948" "20080120501" "8923325" "20070282972" "7115034" "20080249986" "20070192806" "8137200" "20070294772" "8001418" "7904580" "20060019747" "7711791" "8190674" "20080096663" "20080301465" "8554938" "20090327941" "7908415" "8346540" "20040242224" "20060167997" "8281332" "20090319557" "20080154404" "7673083" "20090240827" "20080189390" "20060020724" "20120076197" "9064369" "20110185378" "20060020901" "20110265018" "20100085857" "20110111862" "7882563" "20060277098" "20080281675" "20090198358" "20040148399" "20050286546" "20070201502" "7519911" "20090106258" "20100180201" "7326117" "20020065074" "20080181573" "20090106104" "20060245742" "20060075427" "7769903" "8151259" "20050175324" "20090132924" "20140289623" "8626830" "20090327341" "6024643" "20100131613" "20040103300" "20070155310" "20080162668" "6908390" "8140973" "8209385" "7917645" "7480727" "20070204003" "9002885" "20090049074" "20050169467" "7761816" "20070298840" "20050096125" "20100205049" "7219308" "20040133914" "20030126035" "20080021957" "20050278256" "20090290850" "20080120666" "20080120656" "7043479" "8190704"	US-PGPUB; USPAT	OR	OFF	2015/07/25 13:44

		"20070118606" "20080077483" "8150937" "20050078944" "20120254456" "20110145879" "20100235438" "6939233" "20110271227" "20060292537" "7421656" "8370878" "20030097379" "20060154729" "20070282898" "7426637" "8984626" "20060206492" "20100287580" "7056217" "20080034029" "6816883" "20130158690" "20100132005" "20100105361" "20060206493" "20080201658" "20100293389" "7483958" "7313591" "20070186003" "8972860" "5899810" "20120054615" "20140289622" "20050193017" "20080170477" "8856118" "7895311" "20110246616" "20090282057" "6725258" "20090287790" "20090325712" "20100138761" "20120059847" "8015200" "20110106283" "8667544" "20100057928" "9009066" "20100131104" "20050123135" "7958377" "20100325646" "8190751" "20090276324" "6800031" "20090209350" "8606848" "8931010" "6106395").pn.				
S52	200	("8078665" "6990512" "7860996" "6834308" "20070011264" "7316033" "8355671" "20120251071" "7739584" "8271333" "7899808" "8578502" "20060112144" "20040220879" "8202166" "20100281174" "20040230655" "8571936" "8275746" "20070250193" "6942574" "7194235" "20070269030" "20060092938" "8561202" "8886762" "7882435" "8321905" "20100281534" "8713304" "8706160" "20050125838" "20050111663" "8918806" "20110099444" "8626952" "20080276272" "20100235542" "20090150760" "8140407" "7644172" "20120072451" "8275880" "7415711" "20110072078" "7426329" "20090082110" "8239544" "20100254674" "8369249" "20110209063" "8849701" "8707288" "7695369" "20070294546" "8990119" "8515063" "7962751" "8875206" "8302005" "8266707" "7433930" "20130167005" "20090282076" "20090185688" "8041401" "20130272681" "8150729" "20100131675" "20110170842" "7886069" "20100317443" "7570761" "20090209205" "7818321" "20080028023" "20050005146" "20090043870" "20090083629" "7623740" "20100172635" "20050179685" "20100077435" "20090124329" "8087091" "7590711" "8589779" "20100058377"	US-PGPUB; USPAT	OR	OFF	2015/07/25 13:44

		"20090239573" "20050102379" "7155436" "20120017236" "20090106639" "20040148362" "8943545" "8806341" "20120130971" "6597891" "20060129490" "20080256463" "20060258419" "20120071237" "20070143493" "7975062" "8884886" "8107626" "8683516" "8280223" "8315950" "20100100636" "20110047247" "8612623" "7827298" "20040103297" "20020147699" "20100138746" "7178161" "8128498" "8503861" "20070156679" "20100106879" "8463875" "20080147558" "8704854" "20070100756" "20110010630" "20030132953" "8774951" "20010020944" "8047908" "8340795" "20110087603" "9028329" "20080320531" "7500007" "8376845" "20090113775" "7517282" "8375140" "7673062" "20050186998" "20100247062" "8219711" "8892634" "8346067" "8066566" "8977710" "20100199084" "9049494" "20090006524" "20030151618" "9067150" "20030120943" "20070186246" "20060020890" "8477143" "20130027314" "20080109844" "20090299725" "6587127" "8775655" "8246454" "20050172121" "7921446" "20090158382" "20070016865" "20090099671" "7686693" "20070094405" "20110161509" "8428257" "20070300155" "7155609" "20060069797" "20080155635" "7031931" "20100157978" "7881564" "20100283889" "7660416" "8489760" "8015491" "7593686" "7802095" "7765423" "20110069936" "20070100904" "20080046262" "20100094728" "8127036" "8868464" "20060146770" "20070136778" "7699706" "7343414" "20090282078" "20080301317" "7607582" "7716283" "7747703").pn.				
S53	200	("20090303197" "8301694" "20080059533" "20120036585" "8990104" "7930419" "20090106793" "20080165176" "20040186993" "8020099" "8234715" "8417096" "20060179109" "20090282158" "20090125812" "20080189752" "20110185393" "7890431" "20050097623" "20110276335" "7840631" "8241129" "20100257567" "20080120561" "20030188175" "8108642" "20060206340" "20080235752" "8328642" "20090220090" "20090091578" "8155505" "7565036" "8977768" "20110319169" "20080162358" "20070204011" "7956848" "7478084"	US-PGPUB; USPAT	OR	OFF	2015/07/25 13:44

"8239495" "8510615" "20110072348"
"20060069651" "7465231"
"20020013897" "8250663"
"20100004993" "20080288590"
"20070067315" "7995756"
"20090058822" "7631330" "8438656"
"20110008016" "20050172122"
"20090280905" "8628422" "8475279"
"20100281544" "20080222258"
"8370455" "20070006268"
"20110170004" "20040165006"
"7621814" "7031473" "20070288966"
"20110184744" "8689269"
"20100241855" "20080250238"
"7840769" "20090097643"
"20080071834" "20080216134"
"20060205516" "20100202764"
"20040140997" "20060020998"
"8568238" "20040242269"
"20050149969" "8935320" "8533284"
"20110145562" "8769614"
"20060288040" "8931104"
"20030158813" "7873706" "8935242"
"20110112915" "7464272"
"20040234253" "20080244003"
"20060059095" "9033785" "8655266"
"8112810" "8523663" "20110270742"
"8365235" "20040086120"
"20090222392" "8527525" "8260933"
"20110111854" "8616970" "8407146"
"8417937" "20080282083" "8112815"
"20100100915" "20040240842"
"20100023849" "20070055743"
"8122248" "20100332298" "8393967"
"20090013253" "20060161621"
"20100057779" "8209041"
"20070209005" "20070127523"
"7739715" "20070239546"
"20100041470" "8903895"
"20100064053" "8090659"
"20020169797" "20080155109"
"20060019751" "20110125755"
"20050025465" "20080250239"
"20120184349" "20090070267"
"8386621" "20110225302"
"20120150999" "20040236945"
"20060256130" "8571935"
"20080097632" "7555124"
"20060114787" "9065683"
"20100318809" "20100228758"
"8417797" "8108671" "20050261062"
"7578002" "6881148" "7743009"
"8607143" "8117328" "20120066715"
"8621338" "20050146534" "6948131"
"20090117890" "20100099491"
"20070230910" "20080009344"
"7257309" "20100293581" "7676436"
"20040267952" "20070088806"
"7822866" "8272956" "9038116"
"20070265979" "8267793"
"20110234924" "8046689" "9077858"
"8244315" "20050015551" "7702590"
"8667299" "20030236907"
"20050221882" "8122037"

		"20090063975" "20050015807" "8777753" "20020188760" "20060095472" "20090055510" "8055779" "20060223606" "20060223607" "20070124791" "20090186700" "20080176658" "20080193100").pn.				
S54	200	("20080098101" "8112539" "8543720" "20070273714" "8200629" "7708635" "20100273553" "7721032" "20060018205" "20060211471" "8117550" "9015225" "8046586" "20090287324" "20110072081" "20060149678" "8510769" "20060223608" "8290929" "20080031592" "20080133938" "7590659" "20040123103" "7707614" "8606071" "20090070673" "20060149632" "20080101604" "20060111188" "8000581" "8285118" "8266214" "20080134297" "8260858" "20060100009" "20080229353" "7753788" "20100146145" "20050081155" "20090276313" "20120017150" "20060240890" "20110173163" "20080160910" "20110053693" "20080005801" "20110197129" "20030120541" "20030186745" "20100325660" "8745388" "20060218195" "8364011" "20090063974" "20070156855" "20110119149" "20080148349" "20090124380" "7647614" "20110167140" "20060123131" "8775659" "8914360" "20090163281" "8522300" "20110035462" "7769829" "8417827" "20090323260" "20040133794" "20080046599" "7499863" "8321401" "8060638" "20070220580" "20090013059" "20090119720" "7870385" "8544050" "7610394" "8056109" "20090234476" "20060156412" "20070238499" "6372974" "20060217174" "9037466" "20110029386" "8460109" "8769558" "20080281448" "20100325239" "20090182889" "20080317441" "20080120347" "8775314" "20040078357" "20080155129" "20100114846" "20130282800" "20070243925" "20040187027" "8549097" "20080235580" "20090271706" "20110320628" "20090007188" "20010016869" "20100281093" "7020704" "8789086" "20100325238" "20100011054" "20040244031" "9078049" "20110154173" "20070185972" "20100167823" "20090012935" "7956272" "8433812" "7536474" "7240093" "20070168463" "20050204126" "8083591" "7054888" "8611428" "20100100444" "20070297755" "6452609"	US-PGPUB; USPAT	OR	OFF	2015/07/25 13:44

		"20110176786" "8627205" "7278920" "20070099703" "20060242259" "20130163953" "20080103974" "7386798" "8185579" "20090304359" "20060025220" "8239504" "7509178" "20070204115" "7506019" "20100185775" "20050080743" "8779266" "20080208378" "7089425" "20080004978" "20080159724" "20090177303" "20080147873" "20050181878" "8358273" "8644503" "8348759" "7735012" "7779357" "20100315549" "7519667" "20070213107" "8826445" "8812600" "20070066404" "8506402" "20060029093" "20090131141" "20070250849" "20090228578" "20090193474" "20110106962" "6330593" "7584353" "20090006963" "20060021057" "20070149281" "7803052" "20070011279" "20070192428" "8805830" "20050155068" "8218764" "6816909" "7107045" "7343347" "8565577" "8874436" "20020104096" "20080091529" "8752199" "7310729" "20100049741" "20100211968" "20090282093" "20070271366" "20090282077" "8019200").pn.				
S55	200	("7493289" "20050245317" "6679777" "7475155" "8818169" "8464163" "7941582" "8763058" "20090228544" "20080026732" "20040068536" "20020069412" "7136874" "20050013589" "6154773" "8156046" "20070167216" "8464164" "20090254827" "20090282050" "20060287054" RE41331 "8655953" "20090182445" "20090172542" "8005419" "7985134" "8738615" "7338372" "8019885" "20040248561" "20130212222" "20060031257" "20100184517" "7647297" "9003050" "20060288165" "20080234043" "20080132311" "20080169930" "20100088602" "20120071244" "7930369" "8018455" "20070244880" "9003455" "20070283449" "8970668" "7783703" "20130163580" "8805939" "8589580" "7979557" "8046790" "20110087600" "20080109851" "8506404" "20060179048" "20090157500" "20100075750" "7444388" "8001471" "8943210" "20100042235" "7503006" "8973153" "20100138581" "20100071076" "20100100818" "20110145428" "6944185" "20070191008" "8799408" "20110135283" "8409010" "20040033821" "20110067066" "20110064378" "20120194734" "20110067099" "20070180383" "7558870" "8605097" "7938727" "20120203830" "20090227375"	US-PGPUB; USPAT	OR	OFF	2015/07/25 13:44

		"20090077469" "8402155" "6199076" "20110064377" "20090005141" "7796190" "20060168150" "20130024539" "20110066489" "20100293598" "8090606" "20090265750" "20110137976" "20110066942" "8255331" "20050216417" "20070050458" "20110066944" "20110066663" "8239559" "8181115" "20110150414" "20120246585" "20040254960" "20070204057" "20080103976" "20090204541" "8233366" "20090290710" "20070248328" "20080183840" "20060153040" "6801964" "20050183017" "6856990" "20090307199" "8631351" "20140032636" "8086651" "20040098754" "8190680" "20110181781" "7177950" "7809789" "20110064385" "8122474" "8814692" "7806408" "7469346" "20110063508" "20080027992" "7904964" "7281214" "8078685" "20060188096" "20110064386" "20110093891" "20060002681" "20080184127" "20070243934" "20090215531" "20120042047" "20090041244" "8069262" "20090305788" "7966374" "20070262952" "8348762" "8025569" "20050096005" "7877776" "20090319925" "20110063317" "20080184359" "9021060" "20080212944" "20110246657" "7753797" "20040128364" "20100262833" "8639086" "7734688" "20080086423" "20080288097" "20080222243" "7197049" "20120207441" "8645599" "20090193032" "20090069915" "8316300" "20080182510" "8180645" "8429696" "9003539" "20080160909" "20080189295" "20090205003" "8161562" "20070276866" "20070191101" "20110176790" "20120323349" "8683337" "20080184317" "20080160908" "8482673" "7702805" "20130097302" "20080175566" "20070006079" "8094168" "20070094276" "8777737").pn.				
S56	200	("20090210415" "20110099286" "20100104255" "20080180401" "20080163302" "20100169455" "20040013416" "8088001" "20050278257" "6876901" "8244898" "20080182509" "20080182508" "20060217173" "20050172309" "20130022335" "20080187115" "20080162655" "20130022185" "20080168133" "20040022391" "8739234" "20080010372" "20070191102" "20100325544" "20070214182" "9049472"	US-PGPUB; USPAT	OR	OFF	2015/07/25 13:44

"20120047222" "20050066339"
"20090158326" "20060259355"
"8170468" "8485881" "20100087251"
"20090275285" "20060095401"
"20100023885" "7562394"
"20100218208" "7941500"
"20110125878" "20030188183"
"20090181769" "20110004669"
"20070245376" "20090300145"
"20080178238" "8430745"
"20090106442" "8303413"
"20040168052" "20120042309"
"20090150557" "20090025085"
"20040240861" "7806761" "9081976"
"20030216958" "20050188310"
"20110035258" "20040267715"
"7797442" "8117651" "20080062894"
"7984377" "20060095471"
"20100198732" "8020762"
"20110099225" "7206766" "8202161"
"20090088235" "20050135792"
"20110105226" "20080276158"
"20060015560" "20120251077"
"8782269" "8282459" "7502471"
"20030076345" "20090157553"
"8038523" "20090300202" "7717783"
"7617272" "8038520" "8775665"
"20070006061" "20110289178"
"8668590" "20050165849"
"20020171760" "8615160" "7593744"
"20070192445" "20090062015"
"7462104" "8840475" "8621533"
"20080081700" "20110207525"
"20110055016" "8914603"
"20040254956" "8197324"
"20040078382" "8392600"
"20040133467" "20040181490"
"20070006078" "7877687"
"20090225093" "20060164932"
"20070248326" "20080305738"
"6993509" "7837557" "8606942"
"20110169913" "8032004"
"20110197237" "7917643" "8602866"
"8028038" "8078748" "20070033419"
"20070198744" "20100169461"
"20110296057" "20080130886"
"20110035467" "8234385"
"20110035668" "20090150918"
"8086575" "20110302317" "8253649"
"20090204481" "20080195692"
"20080086494" "7699703"
"20090327449" "20080288099"
"9060187" "7343419" "20110112914"
"20080137848" "20080049935"
"8181110" "20100195977" "8230099"
"20060111172" "20110090645"
"20110231660" "20110213837"
"8548946" "7228341" "7929551"
"20020141582" "20070214234"
"20080005171" "20080037781"
"6463078" "20030078102" "7533061"
"7797374" "20060155914"
"20050252958" "20080109841"
"20120014558" "20050164793"

		"20050108320" "8370732" "8556724" "20080005179" "8775321" "6538665" "20110009051" "8051454" "8239359" "7300352" "8285809" "8287341" "20070174866" "20060280437" "8028073" "7010213" "20100125741" "7840984" "20060227673" "20060123058" "7878808" "20050071375" "8892761" "20040172481" "20060288111" "8066568" "20100185729" "8095566").pn.				
S57	200	("20060020879" "20060068907" "20080008439" "20030208300" "20030172033" "20050240588" "20110150430" "20110145726" "7241219" "20100083307" "20080274796" "8825468" "7881656" "20100110200" "20060008256" "20080117926" "20020169970" "8909023" "8468130" "7617278" "8893195" "20060239657" "20120030436" "20120030706" "7913157" "8150918" "7428572" "7611409" "20030237043" "6262724" "20080222520" "20080124054" "9021522" "8682145" "20090254607" "20110255842" "20090147952" "20060059526" "7686215" "7412459" "7702592" "20100223337" "8246468" "7871327" "7792925" "8485878" "20080155470" "7318196" "8167723" "8856641" "8543785" "20090118017" "8282484" "7946918" "20080178242" "20060128469" "20100094900" "8170123" "20060146772" "20120184362" "20050059378" "20110202842" "9009337" "8631334" "20100042920" "7753790" "20100191860" "7783773" "6192340" "20090117994" "20090234472" "7536355" "7966414" "8543095" "7925897" "20090182817" "20100082585" "20090193138" "8721448" "8090779" "20090300139" "20050017988" "7165219" "8175097" "20060211470" "20100077290" "20090163273" "7580526" "20090118001" "7841946" "20090118005" "20090115133" "20080127278" "8700739" "20070083467" "8688841" "8484563" "20020088011" "20040152054" "20080013274" "20040024580" "7113918" "20120124123" "6850256" "7559089" "20120233036" "7315984" "20080028170" "20060072046" "20080055314" "8516035" "20100121911" "8346762" "7706637" "8245142" "20120066768" RE45531 "20030115351" "20100056280" "8707181" "8874725" "20080155297" "20040078832" "20080214103" "20100023144" "8086902" "8522142"	US-PGPUB; USPAT	OR	OFF	2015/07/25 13:44

		"20090093306" "8074083" "7491123" "20090325709" "9054891" "8301715" "7523507" "20060178187" "20100027966" "20090118006" "8056139" "8266637" "20100064332" "20080209487" "20100011392" "20070265091" "6908389" "20080094400" "20090222862" "20070100787" "8296675" "20100274664" "8441338" "20100023893" "20060004778" "7797471" "20080090659" "7962640" "20070247551" "7690992" "20090132453" "8262466" "20080201375" "8438602" "20090025024" "8068716" "20070191104" "7069590" "20030083940" "7529870" "7814220" "7949810" "20110195790" "8317618" "8151199" "20090216683" "7623502" "20090253476" "20110081127" "20100010648" "20120054616" "20080133611" "7401150" "20080219638" "20060072596" "8397305" "20080028037" "20100268680" "8352544" "20040148424" "20110138429" "8438297" "7529871" "20080288096" "7991268" "8069255" "8661464" "20090248672" "20090193338" "20090183207" "6996236" "8016677" "20030211889").pn.				
S58	200	("20070022464" "8926395" "20080082576" "7877532" "8631451" "8131865" "20030126211" "7526588" "7951000" "20080065992" "20060084488" "7786367" "8135891" "7458025" "8539525" "20070281768" "20090132712" "8292626" "8655146" "8407809" "20100247061" "20130254340" "8447421" "20110111859" "20050246654" "8224752" "20120066289" "20060159068" "20110067115" "8484721" "20070248311" "20090265549" "8082376" "20070162611" "20090296552" "7647277" "8387083" "8444485" "20070006064" "7725557" "20080033990" "20030093548" "8214545" "8687042" "20080287190" "7844661" "7976372" "6113495" "20090060182" "20070282969" "7779185" "20050273491" "9055194" "20090265557" "20090265793" "20090265789" "20120028714" "8122475" "20090265746" "8428421" "20060246984" "20080189354" "20090112839" "20090164034" "20110229107" "20100158101" "7778971" "20090287567" "8918195" "7340526" "20080177860" "20110072366" "8171194" "7941761" "20100146544" "20090275412"	US-PGPUB; USPAT	OR	OFF	2015/07/25 13:44

		"20080115045" "20060177198" "20090070184" "20050026693" "20110087971" "7548948" "20070250870" "8381310" "20050075166" "7805051" "8135769" "8206224" "20070250781" "8838693" "20120041954" "20030009343" "20060029013" "20080270881" "20060293969" "7896743" "20050273553" "8171195" "20070011225" "7882356" "20060258446" "9071796" "7945636" "20100049719" "20100306428" "20120210216" "20090049385" "20120059884" "8571991" "8357046" "8271115" "7925300" "20120197419" "8131898" "20090325706" "20090132072" "20070245378" "20050060542" "7492769" "20100046917" "20090248802" "20100250761" "20080120389" "20110167170" "8196043" "7609835" "7110982" "8968077" "20080114645" "8359657" "20110022519" "20100161091" "20100076958" "8458147" "20070021972" "8585501" "20030115146" "20080244644" "8060909" "20110238520" "20090210079" "8121952" "20060287099" "20070061497" "20120284421" "20060293991" "8112361" "8713443" "6241612" "20010042107" "7702723" "20080212945" "8099536" "7535465" "20080235286" "8555395" "20060287097" "20090158443" "8366531" "20070077784" "20100037320" "8307392" "7245817" "20080155057" "8544033" "20100287472" "20110041063" "20100154035" "7690043" "20080089548" "6846238" "20030231861" "8612643" "20090204738" "20110211114" "20090063277" "7581182" "20070006080" "6582310" "20090046838" "8275360" "20070011237" "8352996" "7536565" "20100064000" "20060209174" "7987148" "20020162106" "20070245377" "20080229215" "20070213111" "20070129140" "20090164032" "20100064055" "20100304860" "20120252557" "20120050185" "20090089846" "8694665" "8738787").pn.				
S59	200	("20050010952" "8731381" "20080235588" "20080146338" "8775647" "7698467" "8888592" "20080250061" "20080063353" "20090124387" "20120079605" "7756792" "7111240" "8682750" "6256268" "20090204244" "7616097" "20100014833" "7904537" "7469410"	US-PGPUB; USPAT	OR	OFF	2015/07/25 13:44

"20080201376" "8996409"
"20110201388" "20050246458"
"20110093877" "7783070"
"20060135230" "20090088240"
"20070111776" "20070168540"
"7917477" "8554616" "20070067301"
"7529872" "20080194175"
"20110119586" "8155336"
"20110126255" "20070004519"
"7966362" "8233916" "6641481"
"8341037" "8180895" "20020107802"
"20110122063" "20090088257"
"20120185530" "5911582"
"20080147214" "20080307454"
"7085845" "20090093311"
"20090088258" "7441020" "7722467"
"7991738" "8046428" "20080172413"
"20130038702" "20060206581"
"20070247794" "20090013347"
"20030009770" "8086226" "8341282"
"20070220111" "20100333129"
"20110172013" "20060095848"
"20030115147" "20070213857"
"7707246" "7681238" "20060190410"
"7730165" "20070006063" "8244896"
"20100285858" "20050283791"
"20120198088" "20090276068"
"20080270532" "20090132377"
"7681200" "20120042134"
"20080254897" "6884170" "9061207"
"20070026944" "20100235743"
"20090282088" "20080254891"
"7698301" "8321690" "20100010884"
"20050076061" "8184943"
"20020068525" "20110123175"
"6990671" "20020194608"
"20100088716" "8069232"
"20080155634" "8376846" "6364765"
"8255552" "7789757" "8533259"
"20030149668" "20120052941"
"20080281943" "20110125298"
"20100192188" "20070259710"
"8243924" "20040064504"
"20060242275" "20080254878"
"8171410" "20070056013"
"20130024951" "8348716" "8771066"
"20080254892" "20020165923"
"20090082104" "5957695" "8403757"
"20090018682" "20080098301"
"7761339" "20080102947"
"20060218618" "7115035" "6622171"
"20110188199" "7996775" "7765280"
"20120166668" "8812673"
"20070265093" "8739294"
"20050276572" "20050180567"
"20110219460" "8429123" "8944917"
"20150205628" "20040193900"
"7685210" "7526778" "20100005183"
"8755919" "6748537" "20070185892"
"20090281888" "8750115" "7877798"
"20090198361" "20040128198"
"8959154" "7603113" "20070204349"
"6715126" "20080033725"
"20030135465" "6385596" "8291004"

		"20070240030" "20040025185" "8341752" "8523673" "20100250669" "20100332723" "7990809" "20070230904" "8784196" "20110098109" "20060179153" "20070038567" "20120117193" "7757241" "20030190950" "8271022" "20090191855" "20030190951" "20050025466" "8296763" "20070066392" "8468567" "8132263" "20070082720" "5679075" "8544046" "20080096668" "20060204211" "20090222117" "8172677").pn.				
S60	200	("7729946" "20020069418" "8473739" "20050193209" "20030134678" "8065394" "7376414" "20060121965" "20110126113" "20100195975" "20120218381" "20100131977" "7085842" "7930367" "8412840" "20030103079" "7303473" "8285901" "7149772" "8560950" "20100251121" "8909729" "20120254364" "8271038" "20030185395" "8577420" "20060218294" "8930405" "20090082105" "20060085862" "20100253764" "20030112262" "8585502" "8628414" "20090113315" "4785472" "20090187825" "20080107405" "7881476" "20070067243" "8403748" "6903779" "20080155062" "20070250512" "20050015464" "7258614" "20100008650" "8855275" "8684748" "6868403" "20120021825" "20050039128" "7606118" "8234572" "20100113140" "20090085724" "7353270" "20060265503" "20120157199" "20130340012" "20030115598" "8379540" "20100312931" "6990497" "20100169464" "20070076547" "20090172820" "7707224" "20100036759" "6843724" "8843589" "20090222739" "20100325022" "7611408" "20100124404" "20060025216" "8152634" "8727882" "7997494" "20090094160" "8160495" "20050251807" "9043467" "6170060" "8706867" "8751343" "20080307463" "20080307462" "20080103977" "20080205205" "20040209692" "20040140998" "7558463" "20080307456" "7454019" "7164075" "5788507" "20050212214" "7865745" "20080097915" "7165725" "20060265409" "8793256" "20080224988" "8959660" "8491391" "9043276" "7356575" "20100057470" "8131646" "20100312932" "20090136218" "20070232098" "8230004" "20070055728" "20050272504" "20080152316" "20080208379" "8291236" "7668438" "20100070385" "7299291"	US-PGPUB; USPAT	OR	OFF	2015/07/25 13:44

		"20120197897" "7634605" "8768744" "8788078" "20100035692" "20140143687" "20070216600" "20110083074" "20070006062" "20110231658" "20060259930" "20090106847" "20090076898" "7734800" "20090062944" "7778980" "8756160" "20070093277" "20030043191" "20140259166" "20110231872" "20060190616" "7698178" "7086946" "20100049835" "7844498" "8468369" "8753199" "8731371" "20050262449" "20100125646" "8713026" "20110029873" "8622552" "20070067241" "8401187" "20040267899" "8230044" "20020112004" "20070087838" "20020138593" "8359591" "20020055386" "20120033140" "8393948" "20110181518" "20060230038" "20110028221" "7596582" "20120226780" "8353757" "20070299874" "7539307" "20060036488" "20070101361" "20020098885" "20100161825" "20080113614" "20040032348" "20100042654" "20090259926" "6888477" "20120210373" "20080288098" "20070055997" "20030084126" "8725063" "20060080741" "20070236482" "20140033025" "8996145" "20090117846" "20080176540" "7984511" "7636754" "20090100092" "20060041640" "7644173").pn.				
S61	100	("8429365" "20040259621" "8239595" "20110149158" "20020190876" "8608536" "7761414" "20100036748" "20090136029" "7113999" "8282479" "8930561" "7802004" "8225359" "7844722" "20080107170" "20060044951" "7796941" "7566274" "20090119169" "20050157600" "20110066776" "20110208336" "8469813" "8608537" "20040064835" "7613691" "20070291709" "8682722" "20060090122" "5839905" "8893022" "20090315670" "20070266123" "8774602" "20110317831" "20030217170" "20070237494" "20090061927" "20060059223" "9063755" "6692353" "8973083" "20060265667" "7160191" "20040117442" "6507727" "8055688" "20060232449" "20110295393" "7627343" "20110066775" "20020046095" "20040205811" "20050114205" "8413038" "8251811" "20130298154" "20090006695" "8595854" "7920901" "20090215540" "8120707" "20070132660" "8473976" "20120062471" "20090093312" "20100287480" "20060117344"	US-PGPUB; USPAT	OR	OFF	2015/07/25 13:44

		"7610310" "8364024" "9055315" "20080268959" "20080086689" "20070233295" "20060206561" "8458053" "20070006065" "20060123185" "20110066673" "20090319901" "20100269030" "7920856" "8419548" "7997582" "8386414" "20100169463" "20070260742" "20030061280" "20120192229" "8174827" "20060046851" "20080281685" "6253237" "8230097" "8632400" "7303470" "20080201751" "20080256563" "20080076495").pn.				
S62	2500	S49 S50 S51 S52 S53 S54 S55 S56 S57 S58 S59 S60 S61	US-PGPUB; USPAT	OR	OFF	2015/07/25 13:44
S63	0	S62 and "play on tv"	US-PGPUB; USPAT	OR	OFF	2015/07/25 13:46
S64	18	S62 and play near2 tv	US-PGPUB; USPAT	OR	OFF	2015/07/25 13:46
S65	43	S62 and callback	US-PGPUB; USPAT	OR	OFF	2015/07/25 13:52
S66	1	("20070155506").pn.	US-PGPUB; USPAT	OR	OFF	2015/07/25 13:59
S67	1	("20070155506").pn. and "160"	US-PGPUB; USPAT	OR	OFF	2015/07/25 14:00
S68	1	("20070155506").pn. and "220"	US-PGPUB; USPAT	OR	OFF	2015/07/25 14:04
S69	1	("20090172780 ").pn. and display with switching	US-PGPUB; USPAT	OR	OFF	2015/07/25 15:14
S70	200	("8595342" "20100138744" "20090106357" "20080256378" "20020161797" "20100115119" "20090275403" "20130165164" "20090061841" "8631407" "8622839" "8588824" "20090282245" "20090251409" "20100313135" "8909296" "20120084653" "20110296478" "20070294292" "7996566" "7716376" "7665115" "20120158511" "8876599" "20080168568" "20080175569" "8162753" "8918812" "20110125712" "8397266" "20090177966" "20120271688" "8755521" "7849160" "20080301189" "20100118200" "8026805" "20100121693" "20070294621" "20040268400" "8517829" "20040045040" "20090133067" "8910200" "7627808" "20040252400" "7975312" "8020185" "20080114861" "7632186" "8025572" "8556722" "20040239753"	US-PGPUB; USPAT	OR	OFF	2016/06/29 08:16

		"20090228897" "20070011713" "20120222064" "8069414" "8352371" "7529831" "20060173974" "20080181575" "20100177122" "20070003224" "20120166950" "20110035466" "7809790" "8175638" "7984097" "8185625" "20110258623" "20080313402" "8028064" "20070033295" "20100281508" "8055781" "20050022127" "7962548" "8909740" "8122236" "20090109339" "8046672" "7565429" "20100228975" "20070276865" "9021370" "20100332983" "20120030726" "8806340" "20070078552" "20070169087" "20040015398" "8131993" "20080120652" "20060014585" "20050034151" "8909776" "20050019015" "20060250282" "20090190902" "20080319856" "6859838" "8060407" "7949333" "8566301" "20070265073" "20030061305" "7890599" "20070166683" "8244172" "20070100833" "8931105" "20060287021" "8752083" "20110307782" "20100325549" "8062134" "8374488" "20050091107" "8435115" "20110113354" "20130167027" "20110055026" "7787904" "20090204639" "8724696" "8949376" "20090093302" "20090176572" "7975021" "7975310" "20090285548" "7904628" "8016670" "20030182139" "20080118231" "8229856" "20100169509" "7934010" "8892988" "8209396" "7824268" "8702518" "8614625" "7460765" "20080194331" "20080180302" "8499241" "20110150432" "7739596" "20100325543" "8199718" "20110158606" "8435121" "7426537" "7761602" "20080281689" "20040051812" "8506405" "20120215646" "7892095" "20110158610" "7590752" "20130232420" "7574691" "20050210101" "8990673" "20100235741" "8756333" "7369752" "20060182421" "8463924" "20030079038" "20060068861" "8332529" "20100287308" "20100119215" "7460668" "20040133908" "8392452" "8190706" "20070117635" "20080195474" "20080148328" "7058284" "20100076578" "20060020825" "20100150520" "20040225564" "8379668" "20110282896" "20090249222" "20070239849" "20100131978" "20100180010" "20020129089" "20110022471" "20110307785" "20040064518" "6904566" "8392959").pn.				

S71	200	("8112490" "8695030" "7233668" "20060034581" "20070239611" "20080184117" "7382879" "20030225834" "8112504" "20110041060" "20090228569" "8255527" "8285404" "20020116517" "20090176568" "20120239510" "7991156" "7966411" "20090216814" "20070217716" "8968093" "20100138879" "20090307658" "20020065925" "8155714" "8265456" "7861312" "20100122165" "20090327035" "20080118063" "20070117617" "8868785" "20120251076" "8473628" "20120072543" "20060101487" "20110320402" "20090210897" "20020141741" "8161275" "20110058675" "7836511" "8112711" "20080270903" "20080005348" "20090307092" "8117323" "20080129864" "20100232771" "8938674" "20120050012" "20130125013" "7789758" "20090082095" "8429224" "20040183756" "20060080702" "20080150485" "20030233349" "9026913" "8185626" "20040237107" "20050062888" "20070150963" "20100235744" "20090327969" "7801478" "8688991" "8219911" "20090326689" "7917932" "20090228738" "20060168351" "20110055702" "8123599" "20070294773" "7867093" "20100077463" "7941477" "7721103" "20100297934" "20120311043" "20060136964" "8429516" "20030137531" "8015167" "8566442" "7921222" "20080263219" "8244707" "6884172" "8522299" "20140006450" "20090024927" "8954596" "8538564" "20040003102" "20070171903" "20060026162" "20100104269" "6973475" "20120158524" "20040085485" "20100054715" "20040133657" "8249414" "8000690" "20060159366" "20080260295" "20070060312" "20060088228" "20090233705" "20110184881" "20090164902" "20090024923" "8229796" "7590750" "20020133247" "20070191108" "7653928" "7496277" "7278102" "20100319017" "20090060452" "20090094376" "8904455" "20080235142" "20080031600" "8275681" "8806027" "20120203891" "8228670" "20060195909" "8332530" "20110179010" "20110138018" "8734254" "7870282" "20110179357" "20080109550" "20100275221" "7987483" "20100217993" "8122004" "20080071950" "20090193153"	US-PGPUB; USPAT	OR	OFF	2016/06/29 08:16

		"7660558" "20060136577" "20060136572" "20060015911" "20090327561" "20100076827" "20070288715" "20020186843" "20070105588" "20080077679" "20080243279" "8880491" "20090282020" "20080212943" "20050153776" "20110191796" "20070075127" "8285812" "20100306152" "8977107" "8918737" "8650283" "20060125295" "7272794" "20060020968" "20100131671" "8301596" "8402494" "20070239839" "8671440" "8632408" "20110145859" "20070190983" "7433922" "20100105330" "20110004517" "20060293769" "20090288076" "20030052913" "20100056268" "20050182726" "7218360" "8422858" "7627645" "20100131848" "20020138641" "20100211466" "20100198982" "7458894" "20080232763" "7922586" "20060182420" "7765326" "20100169780").pn.				
S72	200	("20090106659" "8290604" "20080288770" "20090327448" "20100023578" "8190760" "20070226384" "20070048719" "7346687" "9063638" "20090240786" "20090240830" "8230341" "8943409" "20050044189" "20110208506" "8307390" "20080146342" "8775938" "20090319599" "20090240828" "7101284" "8244663" "20100026912" "20110055864" "20100070355" "20090098943" "20080084400" "7647560" "20100150105" "20090240768" "20100082835" "20060265637" "8029364" "8868763" "7500916" "20090171715" "20070168287" "20120220222" "20050091597" "20050251732" "20110176555" "20080273077" "20030167318" "8731380" "7433546" "8949450" "9063941" "8370520" "20090106315" "7050124" "20080046948" "20080120501" "8923325" "20070282972" "7115034" "20080249986" "20070192806" "8137200" "20070294772" "8001418" "7904580" "20060019747" "7711791" "8190674" "20080096663" "20080301465" "8554938" "20090327941" "7908415" "8346540" "20040242224" "20060167997" "8281332" "20090319557" "20080154404" "7673083" "20090240827" "20080189390" "20060020724" "20120076197" "9064369" "20110185378" "20060020901" "20110265018" "20100085857" "20110111862" "7882563" "20060277098"	US-PGPUB; USPAT	OR	OFF	2016/06/29 08:16

		"20080281675" "20090198358" "20040148399" "20050286546" "20070201502" "7519911" "20090106258" "20100180201" "7326117" "20020065074" "20080181573" "20090106104" "20060245742" "20060075427" "7769903" "8151259" "20050175324" "20090132924" "20140289623" "8626830" "20090327341" "6024643" "20100131613" "20040103300" "20070155310" "20080162668" "6908390" "8140973" "8209385" "7917645" "7480727" "20070204003" "9002885" "20090049074" "20050169467" "7761816" "20070298840" "20050096125" "20100205049" "7219308" "20040133914" "20030126035" "20080021957" "20050278256" "20090290850" "20080120666" "20080120656" "7043479" "8190704" "20070118606" "20080077483" "8150937" "20050078944" "20120254456" "20110145879" "20100235438" "6939233" "20110271227" "20060292537" "7421656" "8370878" "20030097379" "20060154729" "20070282898" "7426637" "8984626" "20060206492" "20100287580" "7056217" "20080034029" "6816883" "20130158690" "20100132005" "20100105361" "20060206493" "20080201658" "20100293389" "7483958" "7313591" "20070186003" "8972860" "5899810" "20120054615" "20140289622" "20050193017" "20080170477" "8856118" "7895311" "20110246616" "20090282057" "6725258" "20090287790" "20090325712" "20100138761" "20120059847" "8015200" "20110106283" "8667544" "20100057928" "9009066" "20100131104" "20050123135" "7958377" "20100325646" "8190751" "20090276324" "6800031" "20090209350" "8606848" "8931010" "6106395").pn.				
S73	200	("8078665" "6990512" "7860996" "6834308" "20070011264" "7316033" "8355671" "20120251071" "7739584" "8271333" "7899808" "8578502" "20060112144" "20040220879" "8202166" "20100281174" "20040230655" "8571936" "8275746" "20070250193" "6942574" "7194235" "20070269030" "20060092938" "8561202" "8886762" "7882435" "8321905" "20100281534" "8713304" "8706160" "20050125838" "20050111663" "8918806" "20110099444" "8626952"	US-PGPUB; USPAT	OR	OFF	2016/06/29 08:16

"20080276272" "20100235542"
"20090150760" "8140407" "7644172"
"20120072451" "8275880" "7415711"
"20110072078" "7426329"
"20090082110" "8239544"
"20100254674" "8369249"
"20110209063" "8849701" "8707288"
"7695369" "20070294546" "8990119"
"8515063" "7962751" "8875206"
"8302005" "8266707" "7433930"
"20130167005" "20090282076"
"20090185688" "8041401"
"20130272681" "8150729"
"20100131675" "20110170842"
"7886069" "20100317443" "7570761"
"20090209205" "7818321"
"20080028023" "20050005146"
"20090043870" "20090083629"
"7623740" "20100172635"
"20050179685" "20100077435"
"20090124329" "8087091" "7590711"
"8589779" "20100058377"
"20090239573" "20050102379"
"7155436" "20120017236"
"20090106639" "20040148362"
"8943545" "8806341" "20120130971"
"6597891" "20060129490"
"20080256463" "20060258419"
"20120071237" "20070143493"
"7975062" "8884886" "8107626"
"8683516" "8280223" "8315950"
"20100100636" "20110047247"
"8612623" "7827298" "20040103297"
"20020147699" "20100138746"
"7178161" "8128498" "8503861"
"20070156679" "20100106879"
"8463875" "20080147558" "8704854"
"20070100756" "20110010630"
"20030132953" "8774951"
"20010020944" "8047908" "8340795"
"20110087603" "9028329"
"20080320531" "7500007" "8376845"
"20090113775" "7517282" "8375140"
"7673062" "20050186998"
"20100247062" "8219711" "8892634"
"8346067" "8066566" "8977710"
"20100199084" "9049494"
"20090006524" "20030151618"
"9067150" "20030120943"
"20070186246" "20060020890"
"8477143" "20130027314"
"20080109844" "20090299725"
"6587127" "8775655" "8246454"
"20050172121" "7921446"
"20090158382" "20070016865"
"20090099671" "7686693"
"20070094405" "20110161509"
"8428257" "20070300155" "7155609"
"20060069797" "20080155635"
"7031931" "20100157978" "7881564"
"20100283889" "7660416" "8489760"
"8015491" "7593686" "7802095"
"7765423" "20110069936"
"20070100904" "20080046262"

		"20100094728" "8127036" "8868464" "20060146770" "20070136778" "7699706" "7343414" "20090282078" "20080301317" "7607582" "7716283" "7747703").pn.				
S74	200	("20090303197" "8301694" "20080059533" "20120036585" "8990104" "7930419" "20090106793" "20080165176" "20040186993" "8020099" "8234715" "8417096" "20060179109" "20090282158" "20090125812" "20080189752" "20110185393" "7890431" "20050097623" "20110276335" "7840631" "8241129" "20100257567" "20080120561" "20030188175" "8108642" "20060206340" "20080235752" "8328642" "20090220090" "20090091578" "8155505" "7565036" "8977768" "20110319169" "20080162358" "20070204011" "7956848" "7478084" "8239495" "8510615" "20110072348" "20060069651" "7465231" "20020013897" "8250663" "20100004993" "20080288590" "20070067315" "7995756" "20090058822" "7631330" "8438656" "20110008016" "20050172122" "20090280905" "8628422" "8475279" "20100281544" "20080222258" "8370455" "20070006268" "20110170004" "20040165006" "7621814" "7031473" "20070288966" "20110184744" "8689269" "20100241855" "20080250238" "7840769" "20090097643" "20080071834" "20080216134" "20060205516" "20100202764" "20040140997" "20060020998" "8568238" "20040242269" "20050149969" "8935320" "8533284" "20110145562" "8769614" "20060288040" "8931104" "20030158813" "7873706" "8935242" "20110112915" "7464272" "20040234253" "20080244003" "20060059095" "9033785" "8655266" "8112810" "8523663" "20110270742" "8365235" "20040086120" "20090222392" "8527525" "8260933" "20110111854" "8616970" "8407146" "8417937" "20080282083" "8112815" "20100100915" "20040240842" "20100023849" "20070055743" "8122248" "20100332298" "8393967" "20090013253" "20060161621" "20100057779" "8209041" "20070209005" "20070127523" "7739715" "20070239546" "20100041470" "8903895" "20100064053" "8090659" "20020169797" "20080155109" "20060019751" "20110125755"	US-PGPUB; USPAT	OR	OFF	2016/06/29 08:16

		"20050025465" "20080250239" "20120184349" "20090070267" "8386621" "20110225302" "20120150999" "20040236945" "20060256130" "8571935" "20080097632" "7555124" "20060114787" "9065683" "20100318809" "20100228758" "8417797" "8108671" "20050261062" "7578002" "6881148" "7743009" "8607143" "8117328" "20120066715" "8621338" "20050146534" "6948131" "20090117890" "20100099491" "20070230910" "20080009344" "7257309" "20100293581" "7676436" "20040267952" "20070088806" "7822866" "8272956" "9038116" "20070265979" "8267793" "20110234924" "8046689" "9077858" "8244315" "20050015551" "7702590" "8667299" "20030236907" "20050221882" "8122037" "20090063975" "20050015807" "8777753" "20020188760" "20060095472" "20090055510" "8055779" "20060223606" "20060223607" "20070124791" "20090186700" "20080176658" "20080193100").pn.				
S75	200	("20080098101" "8112539" "8543720" "20070273714" "8200629" "7708635" "20100273553" "7721032" "20060018205" "20060211471" "8117550" "9015225" "8046586" "20090287324" "20110072081" "20060149678" "8510769" "20060223608" "8290929" "20080031592" "20080133938" "7590659" "20040123103" "7707614" "8606071" "20090070673" "20060149632" "20080101604" "20060111188" "8000581" "8285118" "8266214" "20080134297" "8260858" "20060100009" "20080229353" "7753788" "20100146145" "20050081155" "20090276313" "20120017150" "20060240890" "20110173163" "20080160910" "20110053693" "20080005801" "20110197129" "20030120541" "20030186745" "20100325660" "8745388" "20060218195" "8364011" "20090063974" "20070156855" "20110119149" "20080148349" "20090124380" "7647614" "20110167140" "20060123131" "8775659" "8914360" "20090163281" "8522300" "20110035462" "7769829" "8417827" "20090323260" "20040133794" "20080046599" "7499863" "8321401" "8060638" "20070220580" "20090013059" "20090119720" "7870385" "8544050" "7610394" "8056109" "20090234476"	US-PGPUB; USPAT	OR	OFF	2016/06/29 08:16

		"20060156412" "20070238499" "6372974" "20060217174" "9037466" "20110029386" "8460109" "8769558" "20080281448" "20100325239" "20090182889" "20080317441" "20080120347" "8775314" "20040078357" "20080155129" "20100114846" "20130282800" "20070243925" "20040187027" "8549097" "20080235580" "20090271706" "20110320628" "20090007188" "20010016869" "20100281093" "7020704" "8789086" "20100325238" "20100011054" "20040244031" "9078049" "20110154173" "20070185972" "20100167823" "20090012935" "7956272" "8433812" "7536474" "7240093" "20070168463" "20050204126" "8083591" "7054888" "8611428" "20100100444" "20070297755" "6452609" "20110176786" "8627205" "7278920" "20070099703" "20060242259" "20130163953" "20080103974" "7386798" "8185579" "20090304359" "20060025220" "8239504" "7509178" "20070204115" "7506019" "20100185775" "20050080743" "8779266" "20080208378" "7089425" "20080004978" "20080159724" "20090177303" "20080147873" "20050181878" "8358273" "8644503" "8348759" "7735012" "7779357" "20100315549" "7519667" "20070213107" "8826445" "8812600" "20070066404" "8506402" "20060029093" "20090131141" "20070250849" "20090228578" "20090193474" "20110106962" "6330593" "7584353" "20090006963" "20060021057" "20070149281" "7803052" "20070011279" "20070192428" "8805830" "20050155068" "8218764" "6816909" "7107045" "7343347" "8565577" "8874436" "20020104096" "20080091529" "8752199" "7310729" "20100049741" "20100211968" "20090282093" "20070271366" "20090282077" "8019200").pn.				
S76	200	("7493289" "20050245317" "6679777" "7475155" "8818169" "8464163" "7941582" "8763058" "20090228544" "20080026732" "20040068536" "20020069412" "7136874" "20050013589" "6154773" "8156046" "20070167216" "8464164" "20090254827" "20090282050" "20060287054" RE41331 "8655953" "20090182445" "20090172542" "8005419" "7985134" "8738615" "7338372" "8019885" "20040248561" "20130212222" "20060031257"	US-PGPUB; USPAT	OR	OFF	2016/06/29 08:16

"20100184517" "7647297" "9003050"
"20060288165" "20080234043"
"20080132311" "20080169930"
"20100088602" "20120071244"
"7930369" "8018455" "20070244880"
"9003455" "20070283449" "8970668"
"7783703" "20130163580" "8805939"
"8589580" "7979557" "8046790"
"20110087600" "20080109851"
"8506404" "20060179048"
"20090157500" "20100075750"
"7444388" "8001471" "8943210"
"20100042235" "7503006" "8973153"
"20100138581" "20100071076"
"20100100818" "20110145428"
"6944185" "20070191008" "8799408"
"20110135283" "8409010"
"20040033821" "20110067066"
"20110064378" "20120194734"
"20110067099" "20070180383"
"7558870" "8605097" "7938727"
"20120203830" "20090227375"
"20090077469" "8402155" "6199076"
"20110064377" "20090005141"
"7796190" "20060168150"
"20130024539" "20110066489"
"20100293598" "8090606"
"20090265750" "20110137976"
"20110066942" "8255331"
"20050216417" "20070050458"
"20110066944" "20110066663"
"8239559" "8181115" "20110150414"
"20120246585" "20040254960"
"20070204057" "20080103976"
"20090204541" "8233366"
"20090290710" "20070248328"
"20080183840" "20060153040"
"6801964" "20050183017" "6856990"
"20090307199" "8631351"
"20140032636" "8086651"
"20040098754" "8190680"
"20110181781" "7177950" "7809789"
"20110064385" "8122474" "8814692"
"7806408" "7469346" "20110063508"
"20080027992" "7904964" "7281214"
"8078685" "20060188096"
"20110064386" "20110093891"
"20060002681" "20080184127"
"20070243934" "20090215531"
"20120042047" "20090041244"
"8069262" "20090305788" "7966374"
"20070262952" "8348762" "8025569"
"20050096005" "7877776"
"20090319925" "20110063317"
"20080184359" "9021060"
"20080212944" "20110246657"
"7753797" "20040128364"
"20100262833" "8639086" "7734688"
"20080086423" "20080288097"
"20080222243" "7197049"
"20120207441" "8645599"
"20090193032" "20090069915"
"8316300" "20080182510" "8180645"
"8429696" "9003539" "20080160909"

		"20080189295" "20090205003" "8161562" "20070276866" "20070191101" "20110176790" "20120323349" "8683337" "20080184317" "20080160908" "8482673" "7702805" "20130097302" "20080175566" "20070006079" "8094168" "20070094276" "8777737").pn.				
S77	200	("20090210415" "20110099286" "20100104255" "20080180401" "20080163302" "20100169455" "20040013416" "8088001" "20050278257" "6876901" "8244898" "20080182509" "20080182508" "20060217173" "20050172309" "20130022335" "20080187115" "20080162655" "20130022185" "20080168133" "20040022391" "8739234" "20080010372" "20070191102" "20100325544" "20070214182" "9049472" "20120047222" "20050066339" "20090158326" "20060259355" "8170468" "8485881" "20100087251" "20090275285" "20060095401" "20100023885" "7562394" "20100218208" "7941500" "20110125878" "20030188183" "20090181769" "20110004669" "20070245376" "20090300145" "20080178238" "8430745" "20090106442" "8303413" "20040168052" "20120042309" "20090150557" "20090025085" "20040240861" "7806761" "9081976" "20030216958" "20050188310" "20110035258" "20040267715" "7797442" "8117651" "20080062894" "7984377" "20060095471" "20100198732" "8020762" "20110099225" "7206766" "8202161" "20090088235" "20050135792" "20110105226" "20080276158" "20060015560" "20120251077" "8782269" "8282459" "7502471" "20030076345" "20090157553" "8038523" "20090300202" "7717783" "7617272" "8038520" "8775665" "20070006061" "20110289178" "8668590" "20050165849" "20020171760" "8615160" "7593744" "20070192445" "20090062015" "7462104" "8840475" "8621533" "20080081700" "20110207525" "20110055016" "8914603" "20040254956" "8197324" "20040078382" "8392600" "20040133467" "20040181490" "20070006078" "7877687" "20090225093" "20060164932" "20070248326" "20080305738" "6993509" "7837557" "8606942" "20110169913" "8032004"	US-PGPUB; USPAT	OR	OFF	2016/06/29 08:16

		"20110197237" "7917643" "8602866" "8028038" "8078748" "20070033419" "20070198744" "20100169461" "20110296057" "20080130886" "20110035467" "8234385" "20110035668" "20090150918" "8086575" "20110302317" "8253649" "20090204481" "20080195692" "20080086494" "7699703" "20090327449" "20080288099" "9060187" "7343419" "20110112914" "20080137848" "20080049935" "8181110" "20100195977" "8230099" "20060111172" "20110090645" "20110231660" "20110213837" "8548946" "7228341" "7929551" "20020141582" "20070214234" "20080005171" "20080037781" "6463078" "20030078102" "7533061" "7797374" "20060155914" "20050252958" "20080109841" "20120014558" "20050164793" "20050108320" "8370732" "8556724" "20080005179" "8775321" "6538665" "20110009051" "8051454" "8239359" "7300352" "8285809" "8287341" "20070174866" "20060280437" "8028073" "7010213" "20100125741" "7840984" "20060227673" "20060123058" "7878808" "20050071375" "8892761" "20040172481" "20060288111" "8066568" "20100185729" "8095566").pn.				
S78	200	("20060020879" "20060068907" "20080008439" "20030208300" "20030172033" "20050240588" "20110150430" "20110145726" "7241219" "20100083307" "20080274796" "8825468" "7881656" "20100110200" "20060008256" "20080117926" "20020169970" "8909023" "8468130" "7617278" "8893195" "20060239657" "20120030436" "20120030706" "7913157" "8150918" "7428572" "7611409" "20030237043" "6262724" "20080222520" "20080124054" "9021522" "8682145" "20090254607" "20110255842" "20090147952" "20060059526" "7686215" "7412459" "7702592" "20100223337" "8246468" "7871327" "7792925" "8485878" "20080155470" "7318196" "8167723" "8856641" "8543785" "20090118017" "8282484" "7946918" "20080178242" "20060128469" "20100094900" "8170123" "20060146772" "20120184362" "20050059378" "20110202842" "9009337" "8631334" "20100042920" "7753790" "20100191860" "7783773" "6192340" "20090117994" "20090234472" "7536355" "7966414" "8543095"	US-PGPUB; USPAT	OR	OFF	2016/06/29 08:16

		"7925897" "20090182817" "20100082585" "20090193138" "8721448" "8090779" "20090300139" "20050017988" "7165219" "8175097" "20060211470" "20100077290" "20090163273" "7580526" "20090118001" "7841946" "20090118005" "20090115133" "20080127278" "8700739" "20070083467" "8688841" "8484563" "20020088011" "20040152054" "20080013274" "20040024580" "7113918" "20120124123" "6850256" "7559089" "20120233036" "7315984" "20080028170" "20060072046" "20080055314" "8516035" "20100121911" "8346762" "7706637" "8245142" "20120066768" RE45531 "20030115351" "20100056280" "8707181" "8874725" "20080155297" "20040078832" "20080214103" "20100023144" "8086902" "8522142" "20090093306" "8074083" "7491123" "20090325709" "9054891" "8301715" "7523507" "20060178187" "20100027966" "20090118006" "8056139" "8266637" "20100064332" "20080209487" "20100011392" "20070265091" "6908389" "20080094400" "20090222862" "20070100787" "8296675" "20100274664" "8441338" "20100023893" "20060004778" "7797471" "20080090659" "7962640" "20070247551" "7690992" "20090132453" "8262466" "20080201375" "8438602" "20090025024" "8068716" "20070191104" "7069590" "20030083940" "7529870" "7814220" "7949810" "20110195790" "8317618" "8151199" "20090216683" "7623502" "20090253476" "20110081127" "20100010648" "20120054616" "20080133611" "7401150" "20080219638" "20060072596" "8397305" "20080028037" "20100268680" "8352544" "20040148424" "20110138429" "8438297" "7529871" "20080288096" "7991268" "8069255" "8661464" "20090248672" "20090193338" "20090183207" "6996236" "8016677" "20030211889").pn.				
S79	200	("20070022464" "8926395" "20080082576" "7877532" "8631451" "8131865" "20030126211" "7526588" "7951000" "20080065992" "20060084488" "7786367" "8135891" "7458025" "8539525" "20070281768" "20090132712" "8292626" "8655146" "8407809" "20100247061" "20130254340" "8447421" "20110111859" "20050246654"	US-PGPUB; USPAT	OR	OFF	2016/06/29 08:16

"8224752" "20120066289"
"20060159068" "20110067115"
"8484721" "20070248311"
"20090265549" "8082376"
"20070162611" "20090296552"
"7647277" "8387083" "8444485"
"20070006064" "7725557"
"20080033990" "20030093548"
"8214545" "8687042" "20080287190"
"7844661" "7976372" "6113495"
"20090060182" "20070282969"
"7779185" "20050273491" "9055194"
"20090265557" "20090265793"
"20090265789" "20120028714"
"8122475" "20090265746" "8428421"
"20060246984" "20080189354"
"20090112839" "20090164034"
"20110229107" "20100158101"
"7778971" "20090287567" "8918195"
"7340526" "20080177860"
"20110072366" "8171194" "7941761"
"20100146544" "20090275412"
"20080115045" "20060177198"
"20090070184" "20050026693"
"20110087971" "7548948"
"20070250870" "8381310"
"20050075166" "7805051" "8135769"
"8206224" "20070250781" "8838693"
"20120041954" "20030009343"
"20060029013" "20080270881"
"20060293969" "7896743"
"20050273553" "8171195"
"20070011225" "7882356"
"20060258446" "9071796" "7945636"
"20100049719" "20100306428"
"20120210216" "20090049385"
"20120059884" "8571991" "8357046"
"8271115" "7925300" "20120197419"
"8131898" "20090325706"
"20090132072" "20070245378"
"20050060542" "7492769"
"20100046917" "20090248802"
"20100250761" "20080120389"
"20110167170" "8196043" "7609835"
"7110982" "8968077" "20080114645"
"8359657" "20110022519"
"20100161091" "20100076958"
"8458147" "20070021972" "8585501"
"20030115146" "20080244644"
"8060909" "20110238520"
"20090210079" "8121952"
"20060287099" "20070061497"
"20120284421" "20060293991"
"8112361" "8713443" "6241612"
"20010042107" "7702723"
"20080212945" "8099536" "7535465"
"20080235286" "8555395"
"20060287097" "20090158443"
"8366531" "20070077784"
"20100037320" "8307392" "7245817"
"20080155057" "8544033"
"20100287472" "20110041063"
"20100154035" "7690043"
"20080089548" "6846238"

		"20030231861" "8612643" "20090204738" "20110211114" "20090063277" "7581182" "20070006080" "6582310" "20090046838" "8275360" "20070011237" "8352996" "7536565" "20100064000" "20060209174" "7987148" "20020162106" "20070245377" "20080229215" "20070213111" "20070129140" "20090164032" "20100064055" "20100304860" "20120252557" "20120050185" "20090089846" "8694665" "8738787").pn.				
S80	200	("20050010952" "8731381" "20080235588" "20080146338" "8775647" "7698467" "8888592" "20080250061" "20080063353" "20090124387" "20120079605" "7756792" "7111240" "8682750" "6256268" "20090204244" "7616097" "20100014833" "7904537" "7469410" "20080201376" "8996409" "20110201388" "20050246458" "20110093877" "7783070" "20060135230" "20090088240" "20070111776" "20070168540" "7917477" "8554616" "20070067301" "7529872" "20080194175" "20110119586" "8155336" "20110126255" "20070004519" "7966362" "8233916" "6641481" "8341037" "8180895" "20020107802" "20110122063" "20090088257" "20120185530" "5911582" "20080147214" "20080307454" "7085845" "20090093311" "20090088258" "7441020" "7722467" "7991738" "8046428" "20080172413" "20130038702" "20060206581" "20070247794" "20090013347" "20030009770" "8086226" "8341282" "20070220111" "20100333129" "20110172013" "20060095848" "20030115147" "20070213857" "7707246" "7681238" "20060190410" "7730165" "20070006063" "8244896" "20100285858" "20050283791" "20120198088" "20090276068" "20080270532" "20090132377" "7681200" "20120042134" "20080254897" "6884170" "9061207" "20070026944" "20100235743" "20090282088" "20080254891" "7698301" "8321690" "20100010884" "20050076061" "8184943" "20020068525" "20110123175" "6990671" "20020194608" "20100088716" "8069232" "20080155634" "8376846" "6364765" "8255552" "7789757" "8533259" "20030149668" "20120052941" "20080281943" "20110125298" "20100192188" "20070259710"	US-PGPUB; USPAT	OR	OFF	2016/06/29 08:16

		"8243924" "20040064504" "20060242275" "20080254878" "8171410" "20070056013" "20130024951" "8348716" "8771066" "20080254892" "20020165923" "20090082104" "5957695" "8403757" "20090018682" "20080098301" "7761339" "20080102947" "20060218618" "7115035" "6622171" "20110188199" "7996775" "7765280" "20120166668" "8812673" "20070265093" "8739294" "20050276572" "20050180567" "20110219460" "8429123" "8944917" "20150205628" "20040193900" "7685210" "7526778" "20100005183" "8755919" "6748537" "20070185892" "20090281888" "8750115" "7877798" "20090198361" "20040128198" "8959154" "7603113" "20070204349" "6715126" "20080033725" "20030135465" "6385596" "8291004" "20070240030" "20040025185" "8341752" "8523673" "20100250669" "20100332723" "7990809" "20070230904" "8784196" "20110098109" "20060179153" "20070038567" "20120117193" "7757241" "20030190950" "8271022" "20090191855" "20030190951" "20050025466" "8296763" "20070066392" "8468567" "8132263" "20070082720" "5679075" "8544046" "20080096668" "20060204211" "20090222117" "8172677").pn.				
S81	200	("7729946" "20020069418" "8473739" "20050193209" "20030134678" "8065394" "7376414" "20060121965" "20110126113" "20100195975" "20120218381" "20100131977" "7085842" "7930367" "8412840" "20030103079" "7303473" "8285901" "7149772" "8560950" "20100251121" "8909729" "20120254364" "8271038" "20030185395" "8577420" "20060218294" "8930405" "20090082105" "20060085862" "20100253764" "20030112262" "8585502" "8628414" "20090113315" "4785472" "20090187825" "20080107405" "7881476" "20070067243" "8403748" "6903779" "20080155062" "20070250512" "20050015464" "7258614" "20100008650" "8855275" "8684748" "6868403" "20120021825" "20050039128" "7606118" "8234572" "20100113140" "20090085724" "7353270" "20060265503" "20120157199" "20130340012" "20030115598" "8379540" "20100312931" "6990497" "20100169464" "20070076547" "20090172820" "7707224"	US-PGPUB; USPAT	OR	OFF	2016/06/29 08:16

		"20100036759" "6843724" "8843589" "20090222739" "20100325022" "7611408" "20100124404" "20060025216" "8152634" "8727882" "7997494" "20090094160" "8160495" "20050251807" "9043467" "6170060" "8706867" "8751343" "20080307463" "20080307462" "20080103977" "20080205205" "20040209692" "20040140998" "7558463" "20080307456" "7454019" "7164075" "5788507" "20050212214" "7865745" "20080097915" "7165725" "20060265409" "8793256" "20080224988" "8959660" "8491391" "9043276" "7356575" "20100057470" "8131646" "20100312932" "20090136218" "20070232098" "8230004" "20070055728" "20050272504" "20080152316" "20080208379" "8291236" "7668438" "20100070385" "7299291" "20120197897" "7634605" "8768744" "8788078" "20100035692" "20140143687" "20070216600" "20110083074" "20070006062" "20110231658" "20060259930" "20090106847" "20090076898" "7734800" "20090062944" "7778980" "8756160" "20070093277" "20030043191" "20140259166" "20110231872" "20060190616" "7698178" "7086946" "20100049835" "7844498" "8468369" "8753199" "8731371" "20050262449" "20100125646" "8713026" "20110029873" "8622552" "20070067241" "8401187" "20040267899" "8230044" "20020112004" "20070087838" "20020138593" "8359591" "20020055386" "20120033140" "8393948" "20110181518" "20060230038" "20110028221" "7596582" "20120226780" "8353757" "20070299874" "7539307" "20060036488" "20070101361" "20020098885" "20100161825" "20080113614" "20040032348" "20100042654" "20090259926" "6888477" "20120210373" "20080288098" "20070055997" "20030084126" "8725063" "20060080741" "20070236482" "20140033025" "8996145" "20090117846" "20080176540" "7984511" "7636754" "20090100092" "20060041640" "7644173").pn.				
S82	100	("8429365" "20040259621" "8239595" "20110149158" "20020190876" "8608536" "7761414" "20100036748" "20090136029" "7113999" "8282479" "8930561" "7802004" "8225359" "7844722" "20080107170"	US-PGPUB; USPAT	OR	OFF	2016/06/29 08:16

		"20060044951" "7796941" "7566274" "20090119169" "20050157600" "20110066776" "20110208336" "8469813" "8608537" "20040064835" "7613691" "20070291709" "8682722" "20060090122" "5839905" "8893022" "20090315670" "20070266123" "8774602" "20110317831" "20030217170" "20070237494" "20090061927" "20060059223" "9063755" "6692353" "8973083" "20060265667" "7160191" "20040117442" "6507727" "8055688" "20060232449" "20110295393" "7627343" "20110066775" "20020046095" "20040205811" "20050114205" "8413038" "8251811" "20130298154" "20090006695" "8595854" "7920901" "20090215540" "8120707" "20070132660" "8473976" "20120062471" "20090093312" "20100287480" "20060117344" "7610310" "8364024" "9055315" "20080268959" "20080086689" "20070233295" "20060206561" "8458053" "20070006065" "20060123185" "20110066673" "20090319901" "20100269030" "7920856" "8419548" "7997582" "8386414" "20100169463" "20070260742" "20030061280" "20120192229" "8174827" "20060046851" "20080281685" "6253237" "8230097" "8632400" "7303470" "20080201751" "20080256563" "20080076495").pn.				
S83	2500	S70 S71 S72 S73 S74 S75 S76 S77 S78 S79 S80 S81 S82	US-PGPUB; USPAT	OR	OFF	2016/06/29 08:16
S84	54	("20020120666" | "20030193520" | "20070202923" | "20080008439" | "20080028037" | "20100205628" | "7424718" | "20050034151" | "20090108057" | "20030004804" | "20060083194" | "20110231265" | "7769827" | "20050144305" | "20060098624" | "20060101098" | "20070094408" | "20080267369" | "20110030020" | "20110060998" | "7058356" | "20090172780" | "20120102209" | "20020133518" | "20080126943" | "20100137028" | "20110138354" | "20110214148" | "20110296465" | "7330875" | "20100027974" | "20110131607" | "20030023488" | "20030028565" | "20100281042" | "20110090898" | "20110107227" | "20070155506" | "20020198778" | "20060203758" | "20080270881" | "20090228919" | "0783505" | "20070288715" | "20030018885" | "20040088728" | "20080155600" | "20100265939" | "20110231566" | "7440972" |	US-PGPUB; USPAT	OR	OFF	2016/06/29 08:16

		"20030005000" | "7849485" | "20080077526" | "20120059875").PN.				
S85	32	S83 and thin$1client	US-PGPUB; USPAT	OR	OFF	2016/06/29 08:18
S86	0	S83 and thin$1client with display$3 with controls	US-PGPUB; USPAT	OR	OFF	2016/06/29 08:20
S87	0	S83 and thin$1client with display$3 with commands	US-PGPUB; USPAT	OR	OFF	2016/06/29 08:20
S88	5	S83 and thin$1client with media with player	US-PGPUB; USPAT	OR	OFF	2016/06/29 08:21
S89	5	S83 and thin$1client same media with player	US-PGPUB; USPAT	OR	OFF	2016/06/29 08:22
S90	5	S83 and thin$1client same media same player	US-PGPUB; USPAT	OR	OFF	2016/06/29 08:22
S91	21	S83 and thin$1client same player	US-PGPUB; USPAT	OR	OFF	2016/06/29 08:23
S92	2	"US 20130031478"	US-PGPUB; USPAT; USOCR; DERWENT	OR	OFF	2016/06/29 08:23
S93	0	("201100600998").pn.	US-PGPUB; USPAT	OR	OFF	2016/06/29 08:29
S94	0	("20110600998").pn.	US-PGPUB; USPAT	OR	OFF	2016/06/29 08:30
S95	1	("20110090898").pn.	US-PGPUB; USPAT	OR	OFF	2016/06/29 08:31
S96	34	("20020075332" | "20020120666" | "20020129102" | "20020133518" | "20020198778" | "20030004804" | "20030005000" | "20030018885" | "20030023488" | "20030028565" | "20030193520" | "20040088728" | "20050144305" | "20060098624" | "20060101098" | "20070094408" | "20080008439" | "20080028037" | "20080126943" | "20080267369" | "20080270881" | "20100265939" | "20100281042" | "20110060998" | "20110090898" | "20110107227" | "20110138354" | "20110214148" | "20110231265" | "20110231566" | "7330875" | "7424718" | "7440972" | "7769827").PN.	US-PGPUB; USPAT	OR	OFF	2016/06/29 08:37
S97	1	("20110090898").pn. and switch$3	US-PGPUB; USPAT	OR	OFF	2016/06/29 09:01
S98	2	("20070155506" | "20120102209").PN.	US-PGPUB;	OR	OFF	2016/06/29 09:11

			USPAT			
S99	1	("20120102209").PN.	US-PGPUB; USPAT	OR	OFF	2016/06/29 09:57
S100	1	("20120102209").PN. and rfb	US-PGPUB; USPAT	OR	OFF	2016/06/29 09:57
S101	1	("20120102209").PN. and set	US-PGPUB; USPAT	OR	OFF	2016/06/29 10:03
S102	1	("20120102209").PN. and encod$3	US-PGPUB; USPAT	OR	OFF	2016/06/29 10:03
S103	2	"US 20130031478"	US-PGPUB; USPAT; USOCR; DERWENT	OR	OFF	2016/06/29 13:55
S104	0	AUDI OBOX.as.	US-PGPUB; USPAT	OR	OFF	2016/06/29 14:06
S105	5	AUDI OBOX	US-PGPUB; USPAT	OR	OFF	2016/06/29 14:06
S106	200	("8595342" "20100138744" "20090106357" "20080256378" "20020161797" "20100115119" "20090275403" "20130165164" "20090061841" "8631407" "8622839" "8588824" "20090282245" "20090251409" "20100313135" "8909296" "20120084653" "20110296478" "20070294292" "7996566" "7716376" "7665115" "20120158511" "8876599" "20080168568" "20080175569" "8162753" "8918812" "20110125712" "8397266" "20090177966" "20120271688" "8755521" "7849160" "20080301189" "20100118200" "8026805" "20100121693" "20070294621" "20040268400" "8517829" "20040045040" "20090133067" "8910200" "7627808" "20040252400" "7975312" "8020185" "20080114861" "7632186" "8025572" "8556722" "20040239753" "20090228897" "20070011713" "20120222064" "8069414" "8352371" "7529831" "20060173974" "20080181575" "20100177122" "20070003224" "20120166950" "20110035466" "7809790" "8175638" "7984097" "8185625" "20110258623" "20080313402" "8028064" "20070033295" "20100281508" "8055781" "20050022127" "7962548" "8909740" "8122236" "20090109339" "8046672" "7565429" "20100228975" "20070276865" "9021370" "20100332983" "20120030726"	US-PGPUB; USPAT	OR	OFF	2016/06/29 14:07

		"8806340" "20070078552" "20070169087" "20040015398" "8131993" "20080120652" "20060014585" "20050034151" "8909776" "20050019015" "20060250282" "20090190902" "20080319856" "6859838" "8060407" "7949333" "8566301" "20070265073" "20030061305" "7890599" "20070166683" "8244172" "20070100833" "8931105" "20060287021" "8752083" "20110307782" "20100325549" "8062134" "8374488" "20050091107" "8435115" "20110113354" "20130167027" "20110055026" "7787904" "20090204639" "8724696" "8949376" "20090093302" "20090176572" "7975021" "7975310" "20090285548" "7904628" "8016670" "20030182139" "20080118231" "8229856" "20100169509" "7934010" "8892988" "8209396" "7824268" "8702518" "8614625" "7460765" "20080194331" "20080180302" "8499241" "20110150432" "7739596" "20100325543" "8199718" "20110158606" "8435121" "7426537" "7761602" "20080281689" "20040051812" "8506405" "20120215646" "7892095" "20110158610" "7590752" "20130232420" "7574691" "20050210101" "8990673" "20100235741" "8756333" "7369752" "20060182421" "8463924" "20030079038" "20060068861" "8332529" "20100287308" "20100119215" "7460668" "20040133908" "8392452" "8190706" "20070117635" "20080195474" "20080148328" "7058284" "20100076578" "20060020825" "20100150520" "20040225564" "8379668" "20110282896" "20090249222" "20070239849" "20100131978" "20100180010" "20020129089" "20110022471" "20110307785" "20040064518" "6904566" "8392959").pn.				
S107	200	("8112490" "8695030" "7233668" "20060034581" "20070239611" "20080184117" "7382879" "20030225834" "8112504" "20110041060" "20090228569" "8255527" "8285404" "20020116517" "20090176568" "20120239510" "7991156" "7966411" "20090216814" "20070217716" "8968093" "20100138879" "20090307658" "20020065925" "8155714" "8265456" "7861312" "20100122165" "20090327035" "20080118063" "20070117617" "8868785"	US-PGPUB; USPAT	OR	OFF	2016/06/29 14:07

"20120251076" "8473628"
"20120072543" "20060101487"
"20110320402" "20090210897"
"20020141741" "8161275"
"20110058675" "7836511" "8112711"
"20080270903" "20080005348"
"20090307092" "8117323"
"20080129864" "20100232771"
"8938674" "20120050012"
"20130125013" "7789758"
"20090082095" "8429224"
"20040183756" "20060080702"
"20080150485" "20030233349"
"9026913" "8185626" "20040237107"
"20050062888" "20070150963"
"20100235744" "20090327969"
"7801478" "8688991" "8219911"
"20090326689" "7917932"
"20090228738" "20060168351"
"20110055702" "8123599"
"20070294773" "7867093"
"20100077463" "7941477" "7721103"
"20100297934" "20120311043"
"20060136964" "8429516"
"20030137531" "8015167" "8566442"
"7921222" "20080263219" "8244707"
"6884172" "8522299" "20140006450"
"20090024927" "8954596" "8538564"
"20040003102" "20070171903"
"20060026162" "20100104269"
"6973475" "20120158524"
"20040085485" "20100054715"
"20040133657" "8249414" "8000690"
"20060159366" "20080260295"
"20070060312" "20060088228"
"20090233705" "20110184881"
"20090164902" "20090024923"
"8229796" "7590750" "20020133247"
"20070191108" "7653928" "7496277"
"7278102" "20100319017"
"20090060452" "20090094376"
"8904455" "20080235142"
"20080031600" "8275681" "8806027"
"20120203891" "8228670"
"20060195909" "8332530"
"20110179010" "20110138018"
"8734254" "7870282" "20110179357"
"20080109550" "20100275221"
"7987483" "20100217993" "8122004"
"20080071950" "20090193153"
"7660558" "20060136577"
"20060136572" "20060015911"
"20090327561" "20100076827"
"20070288715" "20020186843"
"20070105588" "20080077679"
"20080243279" "8880491"
"20090282020" "20080212943"
"20050153776" "20110191796"
"20070075127" "8285812"
"20100306152" "8977107" "8918737"
"8650283" "20060125295" "7272794"
"20060020968" "20100131671"
"8301596" "8402494" "20070239839"
"8671440" "8632408" "20110145859"

		"20070190983" "7433922" "20100105330" "20110004517" "20060293769" "20090288076" "20030052913" "20100056268" "20050182726" "7218360" "8422858" "7627645" "20100131848" "20020138641" "20100211466" "20100198982" "7458894" "20080232763" "7922586" "20060182420" "7765326" "20100169780").pn.				
S108	200	("20090106659" "8290604" "20080288770" "20090327448" "20100023578" "8190760" "20070226384" "20070048719" "7346687" "9063638" "20090240786" "20090240830" "8230341" "8943409" "20050044189" "20110208506" "8307390" "20080146342" "8775938" "20090319599" "20090240828" "7101284" "8244663" "20100026912" "20110055864" "20100070355" "20090098943" "20080084400" "7647560" "20100150105" "20090240768" "20100082835" "20060265637" "8029364" "8868763" "7500916" "20090171715" "20070168287" "20120220222" "20050091597" "20050251732" "20110176555" "20080273077" "20030167318" "8731380" "7433546" "8949450" "9063941" "8370520" "20090106315" "7050124" "20080046948" "20080120501" "8923325" "20070282972" "7115034" "20080249986" "20070192806" "8137200" "20070294772" "8001418" "7904580" "20060019747" "7711791" "8190674" "20080096663" "20080301465" "8554938" "20090327941" "7908415" "8346540" "20040242224" "20060167997" "8281332" "20090319557" "20080154404" "7673083" "20090240827" "20080189390" "20060020724" "20120076197" "9064369" "20110185378" "20060020901" "20110265018" "20100085857" "20110111862" "7882563" "20060277098" "20080281675" "20090198358" "20040148399" "20050286546" "20070201502" "7519911" "20090106258" "20100180201" "7326117" "20020065074" "20080181573" "20090106104" "20060245742" "20060075427" "7769903" "8151259" "20050175324" "20090132924" "20140289623" "8626830" "20090327341" "6024643" "20100131613" "20040103300" "20070155310" "20080162668" "6908390" "8140973" "8209385" "7917645" "7480727" "20070204003"	US-PGPUB; USPAT	OR	OFF	2016/06/29 14:07

		"9002885" "20090049074" "20050169467" "7761816" "20070298840" "20050096125" "20100205049" "7219308" "20040133914" "20030126035" "20080021957" "20050278256" "20090290850" "20080120666" "20080120656" "7043479" "8190704" "20070118606" "20080077483" "8150937" "20050078944" "20120254456" "20110145879" "20100235438" "6939233" "20110271227" "20060292537" "7421656" "8370878" "20030097379" "20060154729" "20070282898" "7426637" "8984626" "20060206492" "20100287580" "7056217" "20080034029" "6816883" "20130158690" "20100132005" "20100105361" "20060206493" "20080201658" "20100293389" "7483958" "7313591" "20070186003" "8972860" "5899810" "20120054615" "20140289622" "20050193017" "20080170477" "8856118" "7895311" "20110246616" "20090282057" "6725258" "20090287790" "20090325712" "20100138761" "20120059847" "8015200" "20110106283" "8667544" "20100057928" "9009066" "20100131104" "20050123135" "7958377" "20100325646" "8190751" "20090276324" "6800031" "20090209350" "8606848" "8931010" "6106395").pn.				
S109	200	("8078665" "6990512" "7860996" "6834308" "20070011264" "7316033" "8355671" "20120251071" "7739584" "8271333" "7899808" "8578502" "20060112144" "20040220879" "8202166" "20100281174" "20040230655" "8571936" "8275746" "20070250193" "6942574" "7194235" "20070269030" "20060092938" "8561202" "8886762" "7882435" "8321905" "20100281534" "8713304" "8706160" "20050125838" "20050111663" "8918806" "20110099444" "8626952" "20080276272" "20100235542" "20090150760" "8140407" "7644172" "20120072451" "8275880" "7415711" "20110072078" "7426329" "20090082110" "8239544" "20100254674" "8369249" "20110209063" "8849701" "8707288" "7695369" "20070294546" "8990119" "8515063" "7962751" "8875206" "8302005" "8266707" "7433930" "20130167005" "20090282076" "20090185688" "8041401" "20130272681" "8150729" "20100131675" "20110170842"	US-PGPUB; USPAT	OR	OFF	2016/06/29 14:07

		"7886069" "20100317443" "7570761" "20090209205" "7818321" "20080028023" "20050005146" "20090043870" "20090083629" "7623740" "20100172635" "20050179685" "20100077435" "20090124329" "8087091" "7590711" "8589779" "20100058377" "20090239573" "20050102379" "7155436" "20120017236" "20090106639" "20040148362" "8943545" "8806341" "20120130971" "6597891" "20060129490" "20080256463" "20060258419" "20120071237" "20070143493" "7975062" "8884886" "8107626" "8683516" "8280223" "8315950" "20100100636" "20110047247" "8612623" "7827298" "20040103297" "20020147699" "20100138746" "7178161" "8128498" "8503861" "20070156679" "20100106879" "8463875" "20080147558" "8704854" "20070100756" "20110010630" "20030132953" "8774951" "20010020944" "8047908" "8340795" "20110087603" "9028329" "20080320531" "7500007" "8376845" "20090113775" "7517282" "8375140" "7673062" "20050186998" "20100247062" "8219711" "8892634" "8346067" "8066566" "8977710" "20100199084" "9049494" "20090006524" "20030151618" "9067150" "20030120943" "20070186246" "20060020890" "8477143" "20130027314" "20080109844" "20090299725" "6587127" "8775655" "8246454" "20050172121" "7921446" "20090158382" "20070016865" "20090099671" "7686693" "20070094405" "20110161509" "8428257" "20070300155" "7155609" "20060069797" "20080155635" "7031931" "20100157978" "7881564" "20100283889" "7660416" "8489760" "8015491" "7593686" "7802095" "7765423" "20110069936" "20070100904" "20080046262" "20100094728" "8127036" "8868464" "20060146770" "20070136778" "7699706" "7343414" "20090282078" "20080301317" "7607582" "7716283" "7747703").pn.				
S110	200	("20090303197" "8301694" "20080059533" "20120036585" "8990104" "7930419" "20090106793" "20080165176" "20040186993" "8020099" "8234715" "8417096" "20060179109" "20090282158" "20090125812" "20080189752" "20110185393" "7890431" "20050097623" "20110276335"	US-PGPUB; USPAT	OR	OFF	2016/06/29 14:07

"7840631" "8241129" "20100257567"
"20080120561" "20030188175"
"8108642" "20060206340"
"20080235752" "8328642"
"20090220090" "20090091578"
"8155505" "7565036" "8977768"
"20110319169" "20080162358"
"20070204011" "7956848" "7478084"
"8239495" "8510615" "20110072348"
"20060069651" "7465231"
"20020013897" "8250663"
"20100004993" "20080288590"
"20070067315" "7995756"
"20090058822" "7631330" "8438656"
"20110008016" "20050172122"
"20090280905" "8628422" "8475279"
"20100281544" "20080222258"
"8370455" "20070006268"
"20110170004" "20040165006"
"7621814" "7031473" "20070288966"
"20110184744" "8689269"
"20100241855" "20080250238"
"7840769" "20090097643"
"20080071834" "20080216134"
"20060205516" "20100202764"
"20040140997" "20060020998"
"8568238" "20040242269"
"20050149969" "8935320" "8533284"
"20110145562" "8769614"
"20060288040" "8931104"
"20030158813" "7873706" "8935242"
"20110112915" "7464272"
"20040234253" "20080244003"
"20060059095" "9033785" "8655266"
"8112810" "8523663" "20110270742"
"8365235" "20040086120"
"20090222392" "8527525" "8260933"
"20110111854" "8616970" "8407146"
"8417937" "20080282083" "8112815"
"20100100915" "20040240842"
"20100023849" "20070055743"
"8122248" "20100332298" "8393967"
"20090013253" "20060161621"
"20100057779" "8209041"
"20070209005" "20070127523"
"7739715" "20070239546"
"20100041470" "8903895"
"20100064053" "8090659"
"20020169797" "20080155109"
"20060019751" "20110125755"
"20050025465" "20080250239"
"20120184349" "20090070267"
"8386621" "20110225302"
"20120150999" "20040236945"
"20060256130" "8571935"
"20080097632" "7555124"
"20060114787" "9065683"
"20100318809" "20100228758"
"8417797" "8108671" "20050261062"
"7578002" "6881148" "7743009"
"8607143" "8117328" "20120066715"
"8621338" "20050146534" "6948131"
"20090117890" "20100099491"
"20070230910" "20080009344"

		"7257309" "20100293581" "7676436" "20040267952" "20070088806" "7822866" "8272956" "9038116" "20070265979" "8267793" "20110234924" "8046689" "9077858" "8244315" "20050015551" "7702590" "8667299" "20030236907" "20050221882" "8122037" "20090063975" "20050015807" "8777753" "20020188760" "20060095472" "20090055510" "8055779" "20060223606" "20060223607" "20070124791" "20090186700" "20080176658" "20080193100").pn.				
S111	200	("20080098101" "8112539" "8543720" "20070273714" "8200629" "7708635" "20100273553" "7721032" "20060018205" "20060211471" "8117550" "9015225" "8046586" "20090287324" "20110072081" "20060149678" "8510769" "20060223608" "8290929" "20080031592" "20080133938" "7590659" "20040123103" "7707614" "8606071" "20090070673" "20060149632" "20080101604" "20060111188" "8000581" "8285118" "8266214" "20080134297" "8260858" "20060100009" "20080229353" "7753788" "20100146145" "20050081155" "20090276313" "20120017150" "20060240890" "20110173163" "20080160910" "20110053693" "20080005801" "20110197129" "20030120541" "20030186745" "20100325660" "8745388" "20060218195" "8364011" "20090063974" "20070156855" "20110119149" "20080148349" "20090124380" "7647614" "20110167140" "20060123131" "8775659" "8914360" "20090163281" "8522300" "20110035462" "7769829" "8417827" "20090323260" "20040133794" "20080046599" "7499863" "8321401" "8060638" "20070220580" "20090013059" "20090119720" "7870385" "8544050" "7610394" "8056109" "20090234476" "20060156412" "20070238499" "6372974" "20060217174" "9037466" "20110029386" "8460109" "8769558" "20080281448" "20100325239" "20090182889" "20080317441" "20080120347" "8775314" "20040078357" "20080155129" "20100114846" "20130282800" "20070243925" "20040187027" "8549097" "20080235580" "20090271706" "20110320628" "20090007188" "20010016869" "20100281093" "7020704" "8789086" "20100325238" "20100011054"	US-PGPUB; USPAT	OR	OFF	2016/06/29 14:07

		"20040244031" "9078049" "20110154173" "20070185972" "20100167823" "20090012935" "7956272" "8433812" "7536474" "7240093" "20070168463" "20050204126" "8083591" "7054888" "8611428" "20100100444" "20070297755" "6452609" "20110176786" "8627205" "7278920" "20070099703" "20060242259" "20130163953" "20080103974" "7386798" "8185579" "20090304359" "20060025220" "8239504" "7509178" "20070204115" "7506019" "20100185775" "20050080743" "8779266" "20080208378" "7089425" "20080004978" "20080159724" "20090177303" "20080147873" "20050181878" "8358273" "8644503" "8348759" "7735012" "7779357" "20100315549" "7519667" "20070213107" "8826445" "8812600" "20070066404" "8506402" "20060029093" "20090131141" "20070250849" "20090228578" "20090193474" "20110106962" "6330593" "7584353" "20090006963" "20060021057" "20070149281" "7803052" "20070011279" "20070192428" "8805830" "20050155068" "8218764" "6816909" "7107045" "7343347" "8565577" "8874436" "20020104096" "20080091529" "8752199" "7310729" "20100049741" "20100211968" "20090282093" "20070271366" "20090282077" "8019200").pn.				
S112	200	("7493289" "20050245317" "6679777" "7475155" "8818169" "8464163" "7941582" "8763058" "20090228544" "20080026732" "20040068536" "20020069412" "7136874" "20050013589" "6154773" "8156046" "20070167216" "8464164" "20090254827" "20090282050" "20060287054" RE41331 "8655953" "20090182445" "20090172542" "8005419" "7985134" "8738615" "7338372" "8019885" "20040248561" "20130212222" "20060031257" "20100184517" "7647297" "9003050" "20060288165" "20080234043" "20080132311" "20080169930" "20100088602" "20120071244" "7930369" "8018455" "20070244880" "9003455" "20070283449" "8970668" "7783703" "20130163580" "8805939" "8589580" "7979557" "8046790" "20110087600" "20080109851" "8506404" "20060179048" "20090157500" "20100075750" "7444388" "8001471" "8943210" "20100042235" "7503006" "8973153" "20100138581" "20100071076"	US-PGPUB; USPAT	OR	OFF	2016/06/29 14:07

		"20100100818" "20110145428" "6944185" "20070191008" "8799408" "20110135283" "8409010" "20040033821" "20110067066" "20110064378" "20120194734" "20110067099" "20070180383" "7558870" "8605097" "7938727" "20120203830" "20090227375" "20090077469" "8402155" "6199076" "20110064377" "20090005141" "7796190" "20060168150" "20130024539" "20110066489" "20100293598" "8090606" "20090265750" "20110137976" "20110066942" "8255331" "20050216417" "20070050458" "20110066944" "20110066663" "8239559" "8181115" "20110150414" "20120246585" "20040254960" "20070204057" "20080103976" "20090204541" "8233366" "20090290710" "20070248328" "20080183840" "20060153040" "6801964" "20050183017" "6856990" "20090307199" "8631351" "20140032636" "8086651" "20040098754" "8190680" "20110181781" "7177950" "7809789" "20110064385" "8122474" "8814692" "7806408" "7469346" "20110063508" "20080027992" "7904964" "7281214" "8078685" "20060188096" "20110064386" "20110093891" "20060002681" "20080184127" "20070243934" "20090215531" "20120042047" "20090041244" "8069262" "20090305788" "7966374" "20070262952" "8348762" "8025569" "20050096005" "7877776" "20090319925" "20110063317" "20080184359" "9021060" "20080212944" "20110246657" "7753797" "20040128364" "20100262833" "8639086" "7734688" "20080086423" "20080288097" "20080222243" "7197049" "20120207441" "8645599" "20090193032" "20090069915" "8316300" "20080182510" "8180645" "8429696" "9003539" "20080160909" "20080189295" "20090205003" "8161562" "20070276866" "20070191101" "20110176790" "20120323349" "8683337" "20080184317" "20080160908" "8482673" "7702805" "20130097302" "20080175566" "20070006079" "8094168" "20070094276" "8777737").pn.				
S113	200	("20090210415" "20110099286" "20100104255" "20080180401" "20080163302" "20100169455" "20040013416" "8088001" "20050278257" "6876901" "8244898"	US-PGPUB; USPAT	OR	OFF	2016/06/29 14:07

"20080182509" "20080182508"
"20060217173" "20050172309"
"20130022335" "20080187115"
"20080162655" "20130022185"
"20080168133" "20040022391"
"8739234" "20080010372"
"20070191102" "20100325544"
"20070214182" "9049472"
"20120047222" "20050066339"
"20090158326" "20060259355"
"8170468" "8485881" "20100087251"
"20090275285" "20060095401"
"20100023885" "7562394"
"20100218208" "7941500"
"20110125878" "20030188183"
"20090181769" "20110004669"
"20070245376" "20090300145"
"20080178238" "8430745"
"20090106442" "8303413"
"20040168052" "20120042309"
"20090150557" "20090025085"
"20040240861" "7806761" "9081976"
"20030216958" "20050188310"
"20110035258" "20040267715"
"7797442" "8117651" "20080062894"
"7984377" "20060095471"
"20100198732" "8020762"
"20110099225" "7206766" "8202161"
"20090088235" "20050135792"
"20110105226" "20080276158"
"20060015560" "20120251077"
"8782269" "8282459" "7502471"
"20030076345" "20090157553"
"8038523" "20090300202" "7717783"
"7617272" "8038520" "8775665"
"20070006061" "20110289178"
"8668590" "20050165849"
"20020171760" "8615160" "7593744"
"20070192445" "20090062015"
"7462104" "8840475" "8621533"
"20080081700" "20110207525"
"20110055016" "8914603"
"20040254956" "8197324"
"20040078382" "8392600"
"20040133467" "20040181490"
"20070006078" "7877687"
"20090225093" "20060164932"
"20070248326" "20080305738"
"6993509" "7837557" "8606942"
"20110169913" "8032004"
"20110197237" "7917643" "8602866"
"8028038" "8078748" "20070033419"
"20070198744" "20100169461"
"20110296057" "20080130886"
"20110035467" "8234385"
"20110035668" "20090150918"
"8086575" "20110302317" "8253649"
"20090204481" "20080195692"
"20080086494" "7699703"
"20090327449" "20080288099"
"9060187" "7343419" "20110112914"
"20080137848" "20080049935"
"8181110" "20100195977" "8230099"
"20060111172" "20110090645"

		"20110231660" "20110213837" "8548946" "7228341" "7929551" "20020141582" "20070214234" "20080005171" "20080037781" "6463078" "20030078102" "7533061" "7797374" "20060155914" "20050252958" "20080109841" "20120014558" "20050164793" "20050108320" "8370732" "8556724" "20080005179" "8775321" "6538665" "20110009051" "8051454" "8239359" "7300352" "8285809" "8287341" "20070174866" "20060280437" "8028073" "7010213" "20100125741" "7840984" "20060227673" "20060123058" "7878808" "20050071375" "8892761" "20040172481" "20060288111" "8066568" "20100185729" "8095566").pn.				
S114	200	("20060020879" "20060068907" "20080008439" "20030208300" "20030172033" "20050240588" "20110150430" "20110145726" "7241219" "20100083307" "20080274796" "8825468" "7881656" "20100110200" "20060008256" "20080117926" "20020169970" "8909023" "8468130" "7617278" "8893195" "20060239657" "20120030436" "20120030706" "7913157" "8150918" "7428572" "7611409" "20030237043" "6262724" "20080222520" "20080124054" "9021522" "8682145" "20090254607" "20110255842" "20090147952" "20060059526" "7686215" "7412459" "7702592" "20100223337" "8246468" "7871327" "7792925" "8485878" "20080155470" "7318196" "8167723" "8856641" "8543785" "20090118017" "8282484" "7946918" "20080178242" "20060128469" "20100094900" "8170123" "20060146772" "20120184362" "20050059378" "20110202842" "9009337" "8631334" "20100042920" "7753790" "20100191860" "7783773" "6192340" "20090117994" "20090234472" "7536355" "7966414" "8543095" "7925897" "20090182817" "20100082585" "20090193138" "8721448" "8090779" "20090300139" "20050017988" "7165219" "8175097" "20060211470" "20100077290" "20090163273" "7580526" "20090118001" "7841946" "20090118005" "20090115133" "20080127278" "8700739" "20070083467" "8688841" "8484563" "20020088011" "20040152054" "20080013274" "20040024580" "7113918" "20120124123" "6850256" "7559089" "20120233036" "7315984"	US-PGPUB; USPAT	OR	OFF	2016/06/29 14:07

		"20080028170" "20060072046" "20080055314" "8516035" "20100121911" "8346762" "7706637" "8245142" "20120066768" RE45531 "20030115351" "20100056280" "8707181" "8874725" "20080155297" "20040078832" "20080214103" "20100023144" "8086902" "8522142" "20090093306" "8074083" "7491123" "20090325709" "9054891" "8301715" "7523507" "20060178187" "20100027966" "20090118006" "8056139" "8266637" "20100064332" "20080209487" "20100011392" "20070265091" "6908389" "20080094400" "20090222862" "20070100787" "8296675" "20100274664" "8441338" "20100023893" "20060004778" "7797471" "20080090659" "7962640" "20070247551" "7690992" "20090132453" "8262466" "20080201375" "8438602" "20090025024" "8068716" "20070191104" "7069590" "20030083940" "7529870" "7814220" "7949810" "20110195790" "8317618" "8151199" "20090216683" "7623502" "20090253476" "20110081127" "20100010648" "20120054616" "20080133611" "7401150" "20080219638" "20060072596" "8397305" "20080028037" "20100268680" "8352544" "20040148424" "20110138429" "8438297" "7529871" "20080288096" "7991268" "8069255" "8661464" "20090248672" "20090193338" "20090183207" "6996236" "8016677" "20030211889").pn.				
S115	200	("20070022464" "8926395" "20080082576" "7877532" "8631451" "8131865" "20030126211" "7526588" "7951000" "20080065992" "20060084488" "7786367" "8135891" "7458025" "8539525" "20070281768" "20090132712" "8292626" "8655146" "8407809" "20100247061" "20130254340" "8447421" "20110111859" "20050246654" "8224752" "20120066289" "20060159068" "20110067115" "8484721" "20070248311" "20090265549" "8082376" "20070162611" "20090296552" "7647277" "8387083" "8444485" "20070006064" "7725557" "20080033990" "20030093548" "8214545" "8687042" "20080287190" "7844661" "7976372" "6113495" "20090060182" "20070282969" "7779185" "20050273491" "9055194" "20090265557" "20090265793" "20090265789" "20120028714"	US-PGPUB; USPAT	OR	OFF	2016/06/29 14:07

		"8122475" "20090265746" "8428421" "20060246984" "20080189354" "20090112839" "20090164034" "20110229107" "20100158101" "7778971" "20090287567" "8918195" "7340526" "20080177860" "20110072366" "8171194" "7941761" "20100146544" "20090275412" "20080115045" "20060177198" "20090070184" "20050026693" "20110087971" "7548948" "20070250870" "8381310" "20050075166" "7805051" "8135769" "8206224" "20070250781" "8838693" "20120041954" "20030009343" "20060029013" "20080270881" "20060293969" "7896743" "20050273553" "8171195" "20070011225" "7882356" "20060258446" "9071796" "7945636" "20100049719" "20100306428" "20120210216" "20090049385" "20120059884" "8571991" "8357046" "8271115" "7925300" "20120197419" "8131898" "20090325706" "20090132072" "20070245378" "20050060542" "7492769" "20100046917" "20090248802" "20100250761" "20080120389" "20110167170" "8196043" "7609835" "7110982" "8968077" "20080114645" "8359657" "20110022519" "20100161091" "20100076958" "8458147" "20070021972" "8585501" "20030115146" "20080244644" "8060909" "20110238520" "20090210079" "8121952" "20060287099" "20070061497" "20120284421" "20060293991" "8112361" "8713443" "6241612" "20010042107" "7702723" "20080212945" "8099536" "7535465" "20080235286" "8555395" "20060287097" "20090158443" "8366531" "20070077784" "20100037320" "8307392" "7245817" "20080155057" "8544033" "20100287472" "20110041063" "20100154035" "7690043" "20080089548" "6846238" "20030231861" "8612643" "20090204738" "20110211114" "20090063277" "7581182" "20070006080" "6582310" "20090046838" "8275360" "20070011237" "8352996" "7536565" "20100064000" "20060209174" "7987148" "20020162106" "20070245377" "20080229215" "20070213111" "20070129140" "20090164032" "20100064055" "20100304860" "20120252557" "20120050185" "20090089846" "8694665" "8738787").pn.				

S116	200	("20050010952" "8731381" "20080235588" "20080146338" "8775647" "7698467" "8888592" "20080250061" "20080063353" "20090124387" "20120079605" "7756792" "7111240" "8682750" "6256268" "20090204244" "7616097" "20100014833" "7904537" "7469410" "20080201376" "8996409" "20110201388" "20050246458" "20110093877" "7783070" "20060135230" "20090088240" "20070111776" "20070168540" "7917477" "8554616" "20070067301" "7529872" "20080194175" "20110119586" "8155336" "20110126255" "20070004519" "7966362" "8233916" "6641481" "8341037" "8180895" "20020107802" "20110122063" "20090088257" "20120185530" "5911582" "20080147214" "20080307454" "7085845" "20090093311" "20090088258" "7441020" "7722467" "7991738" "8046428" "20080172413" "20130038702" "20060206581" "20070247794" "20090013347" "20030009770" "8086226" "8341282" "20070220111" "20100333129" "20110172013" "20060095848" "20030115147" "20070213857" "7707246" "7681238" "20060190410" "7730165" "20070006063" "8244896" "20100285858" "20050283791" "20120198088" "20090276068" "20080270532" "20090132377" "7681200" "20120042134" "20080254897" "6884170" "9061207" "20070026944" "20100235743" "20090282088" "20080254891" "7698301" "8321690" "20100010884" "20050076061" "8184943" "20020068525" "20110123175" "6990671" "20020194608" "20100088716" "8069232" "20080155634" "8376846" "6364765" "8255552" "7789757" "8533259" "20030149668" "20120052941" "20080281943" "20110125298" "20100192188" "20070259710" "8243924" "20040064504" "20060242275" "20080254878" "8171410" "20070056013" "20130024951" "8348716" "8771066" "20080254892" "20020165923" "20090082104" "5957695" "8403757" "20090018682" "20080098301" "7761339" "20080102947" "20060218618" "7115035" "6622171" "20110188199" "7996775" "7765280" "20120166668" "8812673" "20070265093" "8739294" "20050276572" "20050180567" "20110219460" "8429123" "8944917"	US-PGPUB; USPAT	OR	OFF	2016/06/29 14:07

		"20150205628" "20040193900" "7685210" "7526778" "20100005183" "8755919" "6748537" "20070185892" "20090281888" "8750115" "7877798" "20090198361" "20040128198" "8959154" "7603113" "20070204349" "6715126" "20080033725" "20030135465" "6385596" "8291004" "20070240030" "20040025185" "8341752" "8523673" "20100250669" "20100332723" "7990809" "20070230904" "8784196" "20110098109" "20060179153" "20070038567" "20120117193" "7757241" "20030190950" "8271022" "20090191855" "20030190951" "20050025466" "8296763" "20070066392" "8468567" "8132263" "20070082720" "5679075" "8544046" "20080096668" "20060204211" "20090222117" "8172677").pn.				
S117	200	("7729946" "20020069418" "8473739" "20050193209" "20030134678" "8065394" "7376414" "20060121965" "20110126113" "20100195975" "20120218381" "20100131977" "7085842" "7930367" "8412840" "20030103079" "7303473" "8285901" "7149772" "8560950" "20100251121" "8909729" "20120254364" "8271038" "20030185395" "8577420" "20060218294" "8930405" "20090082105" "20060085862" "20100253764" "20030112262" "8585502" "8628414" "20090113315" "4785472" "20090187825" "20080107405" "7881476" "20070067243" "8403748" "6903779" "20080155062" "20070250512" "20050015464" "7258614" "20100008650" "8855275" "8684748" "6868403" "20120021825" "20050039128" "7606118" "8234572" "20100113140" "20090085724" "7353270" "20060265503" "20120157199" "20130340012" "20030115598" "8379540" "20100312931" "6990497" "20100169464" "20070076547" "20090172820" "7707224" "20100036759" "6843724" "8843589" "20090222739" "20100325022" "7611408" "20100124404" "20060025216" "8152634" "8727882" "7997494" "20090094160" "8160495" "20050251807" "9043467" "6170060" "8706867" "8751343" "20080307463" "20080307462" "20080103977" "20080205205" "20040209692" "20040140998" "7558463" "20080307456" "7454019" "7164075" "5788507" "20050212214" "7865745" "20080097915" "7165725" "20060265409" "8793256"	US-PGPUB; USPAT	OR	OFF	2016/06/29 14:07

		"20080224988" "8959660" "8491391" "9043276" "7356575" "20100057470" "8131646" "20100312932" "20090136218" "20070232098" "8230004" "20070055728" "20050272504" "20080152316" "20080208379" "8291236" "7668438" "20100070385" "7299291" "20120197897" "7634605" "8768744" "8788078" "20100035692" "20140143687" "20070216600" "20110083074" "20070006062" "20110231658" "20060259930" "20090106847" "20090076898" "7734800" "20090062944" "7778980" "8756160" "20070093277" "20030043191" "20140259166" "20110231872" "20060190616" "7698178" "7086946" "20100049835" "7844498" "8468369" "8753199" "8731371" "20050262449" "20100125646" "8713026" "20110029873" "8622552" "20070067241" "8401187" "20040267899" "8230044" "20020112004" "20070087838" "20020138593" "8359591" "20020055386" "20120033140" "8393948" "20110181518" "20060230038" "20110028221" "7596582" "20120226780" "8353757" "20070299874" "7539307" "20060036488" "20070101361" "20020098885" "20100161825" "20080113614" "20040032348" "20100042654" "20090259926" "6888477" "20120210373" "20080288098" "20070055997" "20030084126" "8725063" "20060080741" "20070236482" "20140033025" "8996145" "20090117846" "20080176540" "7984511" "7636754" "20090100092" "20060041640" "7644173").pn.				
S118	100	("8429365" "20040259621" "8239595" "20110149158" "20020190876" "8608536" "7761414" "20100036748" "20090136029" "7113999" "8282479" "8930561" "7802004" "8225359" "7844722" "20080107170" "20060044951" "7796941" "7566274" "20090119169" "20050157600" "20110066776" "20110208336" "8469813" "8608537" "20040064835" "7613691" "20070291709" "8682722" "20060090122" "5839905" "8893022" "20090315670" "20070266123" "8774602" "20110317831" "20030217170" "20070237494" "20090061927" "20060059223" "9063755" "6692353" "8973083" "20060265667" "7160191" "20040117442" "6507727" "8055688" "20060232449" "20110295393"	US-PGPUB; USPAT	OR	OFF	2016/06/29 14:07

		"7627343" "20110066775" "20020046095" "20040205811" "20050114205" "8413038" "8251811" "20130298154" "20090006695" "8595854" "7920901" "20090215540" "8120707" "20070132660" "8473976" "20120062471" "20090093312" "20100287480" "20060117344" "7610310" "8364024" "9055315" "20080268959" "20080086689" "20070233295" "20060206561" "8458053" "20070006065" "20060123185" "20110066673" "20090319901" "20100269030" "7920856" "8419548" "7997582" "8386414" "20100169463" "20070260742" "20030061280" "20120192229" "8174827" "20060046851" "20080281685" "6253237" "8230097" "8632400" "7303470" "20080201751" "20080256563" "20080076495").pn.				
S119	2500	S106 S107 S108 S109 S110 S111 S112 S113 S114 S115 S116 S117 S118	US-PGPUB; USPAT	OR	OFF	2016/06/29 14:07
S120	12	cloud$1based and S119	US-PGPUB; USPAT	OR	OFF	2016/06/29 14:07
S121	0	cloud$1based and S119 and saas	US-PGPUB; USPAT	OR	OFF	2016/06/29 14:12
S122	16350	saas	US-PGPUB; USPAT	OR	OFF	2016/06/29 14:12
S123	13343	saas and cloud	US-PGPUB; USPAT	OR	OFF	2016/06/29 14:12
S124	662	saas and cloud and "715".clas.	US-PGPUB; USPAT	OR	OFF	2016/06/29 14:13
S125	516	hospitality with entertainment	US-PGPUB; USPAT	OR	OFF	2016/06/29 14:24
S126	27	hospitality with entertainment and QR with code	US-PGPUB; USPAT	OR	OFF	2016/06/29 14:27
S127	1	hospitality with entertainment and QR with code and thin$1client	US-PGPUB; USPAT	OR	OFF	2016/06/29 14:29
S128	490	smart with signage	US-PGPUB; USPAT	OR	OFF	2016/06/29 14:32
S129	35	samsung.as. and smart with signage	US-PGPUB; USPAT	OR	OFF	2016/06/29 14:32
S130	3	broadsign.as.	US-PGPUB; USPAT	OR	OFF	2016/06/29 14:38
S131	19	saas and cloud and "715".clas. and QR	US-	OR	OFF	2016/06/29

		with code	PGPUB; USPAT			14:41
S132	3	casting and cloud and "715".clas. and QR with code	US-PGPUB; USPAT	OR	OFF	2016/06/29 14:43
S133	0	cloud$1based with media with player and "715".clas. and QR with code	US-PGPUB; USPAT	OR	OFF	2016/06/29 14:46
S134	0	thin$1client with media with player and "715".clas. and QR with code	US-PGPUB; USPAT	OR	OFF	2016/06/29 14:46
S135	0	thin$1client with media with player and QR with code	US-PGPUB; USPAT	OR	OFF	2016/06/29 14:46
S136	0	thin$1client same media with player and QR with code	US-PGPUB; USPAT	OR	OFF	2016/06/29 14:46
S137	20	thin$1client same media with player	US-PGPUB; USPAT	OR	OFF	2016/06/29 14:47
S138	13	thin$1client same "media player "	US-PGPUB; USPAT	OR	OFF	2016/06/29 14:47
S139	3	"12264624".rlan. or ("12".src. and "264624".ap.)	US-PGPUB; USPAT; USOCR; DERWENT	OR	OFF	2016/06/29 15:27
S140	200	("8595342" "20100138744" "20090106357" "20080256378" "20020161797" "20100115119" "20090275403" "20130165164" "20090061841" "8631407" "8622839" "8588824" "20090282245" "20090251409" "20100313135" "8909296" "20120084653" "20110296478" "20070294292" "7996566" "7716376" "7665115" "20120158511" "8876599" "20080168568" "20080175569" "8162753" "8918812" "20110125712" "8397266" "20090177966" "20120271688" "8755521" "7849160" "20080301189" "20100118200" "8026805" "20100121693" "20070294621" "20040268400" "8517829" "20040045040" "20090133067" "8910200" "7627808" "20040252400" "7975312" "8020185" "20080114861" "7632186" "8025572" "8556722" "20040239753" "20090228897" "20070011713" "20120222064" "8069414" "8352371" "7529831" "20060173974" "20080181575" "20100177122" "20070003224" "20120166950" "20110035466" "7809790" "8175638" "7984097" "8185625" "20110258623" "20080313402" "8028064" "20070033295" "20100281508" "8055781" "20050022127" "7962548"	US-PGPUB; USPAT	OR	OFF	2016/07/06 12:42

		"8909740" "8122236" "20090109339" "8046672" "7565429" "20100228975" "20070276865" "9021370" "20100332983" "20120030726" "8806340" "20070078552" "20070169087" "20040015398" "8131993" "20080120652" "20060014585" "20050034151" "8909776" "20050019015" "20060250282" "20090190902" "20080319856" "6859838" "8060407" "7949333" "8566301" "20070265073" "20030061305" "7890599" "20070166683" "8244172" "20070100833" "8931105" "20060287021" "8752083" "20110307782" "20100325549" "8062134" "8374488" "20050091107" "8435115" "20110113354" "20130167027" "20110055026" "7787904" "20090204639" "8724696" "8949376" "20090093302" "20090176572" "7975021" "7975310" "20090285548" "7904628" "8016670" "20030182139" "20080118231" "8229856" "20100169509" "7934010" "8892988" "8209396" "7824268" "8702518" "8614625" "7460765" "20080194331" "20080180302" "8499241" "20110150432" "7739596" "20100325543" "8199718" "20110158606" "8435121" "7426537" "7761602" "20080281689" "20040051812" "8506405" "20120215646" "7892095" "20110158610" "7590752" "20130232420" "7574691" "20050210101" "8990673" "20100235741" "8756333" "7369752" "20060182421" "8463924" "20030079038" "20060068861" "8332529" "20100287308" "20100119215" "7460668" "20040133908" "8392452" "8190706" "20070117635" "20080195474" "20080148328" "7058284" "20100076578" "20060020825" "20100150520" "20040225564" "8379668" "20110282896" "20090249222" "20070239849" "20100131978" "20100180010" "20020129089" "20110022471" "20110307785" "20040064518" "6904566" "8392959").pn.				
S141	200	("8112490" "8695030" "7233668" "20060034581" "20070239611" "20080184117" "7382879" "20030225834" "8112504" "20110041060" "20090228569" "8255527" "8285404" "20020116517" "20090176568" "20120239510" "7991156" "7966411" "20090216814" "20070217716" "8968093" "20100138879" "20090307658"	US-PGPUB; USPAT	OR	OFF	2016/07/06 12:42

"20020065925" "8155714" "8265456"
"7861312" "20100122165"
"20090327035" "20080118063"
"20070117617" "8868785"
"20120251076" "8473628"
"20120072543" "20060101487"
"20110320402" "20090210897"
"20020141741" "8161275"
"20110058675" "7836511" "8112711"
"20080270903" "20080005348"
"20090307092" "8117323"
"20080129864" "20100232771"
"8938674" "20120050012"
"20130125013" "7789758"
"20090082095" "8429224"
"20040183756" "20060080702"
"20080150485" "20030233349"
"9026913" "8185626" "20040237107"
"20050062888" "20070150963"
"20100235744" "20090327969"
"7801478" "8688991" "8219911"
"20090326689" "7917932"
"20090228738" "20060168351"
"20110055702" "8123599"
"20070294773" "7867093"
"20100077463" "7941477" "7721103"
"20100297934" "20120311043"
"20060136964" "8429516"
"20030137531" "8015167" "8566442"
"7921222" "20080263219" "8244707"
"6884172" "8522299" "20140006450"
"20090024927" "8954596" "8538564"
"20040003102" "20070171903"
"20060026162" "20100104269"
"6973475" "20120158524"
"20040085485" "20100054715"
"20040133657" "8249414" "8000690"
"20060159366" "20080260295"
"20070060312" "20060088228"
"20090233705" "20110184881"
"20090164902" "20090024923"
"8229796" "7590750" "20020133247"
"20070191108" "7653928" "7496277"
"7278102" "20100319017"
"20090060452" "20090094376"
"8904455" "20080235142"
"20080031600" "8275681" "8806027"
"20120203891" "8228670"
"20060195909" "8332530"
"20110179010" "20110138018"
"8734254" "7870282" "20110179357"
"20080109550" "20100275221"
"7987483" "20100217993" "8122004"
"20080071950" "20090193153"
"7660558" "20060136577"
"20060136572" "20060015911"
"20090327561" "20100076827"
"20070288715" "20020186843"
"20070105588" "20080077679"
"20080243279" "8880491"
"20090282020" "20080212943"
"20050153776" "20110191796"
"20070075127" "8285812"
"20100306152" "8977107" "8918737"

		"8650283" "20060125295" "7272794" "20060020968" "20100131671" "8301596" "8402494" "20070239839" "8671440" "8632408" "20110145859" "20070190983" "7433922" "20100105330" "20110004517" "20060293769" "20090288076" "20030052913" "20100056268" "20050182726" "7218360" "8422858" "7627645" "20100131848" "20020138641" "20100211466" "20100198982" "7458894" "20080232763" "7922586" "20060182420" "7765326" "20100169780").pn.				
S142	200	("20090106659" "8290604" "20080288770" "20090327448" "20100023578" "8190760" "20070226384" "20070048719" "7346687" "9063638" "20090240786" "20090240830" "8230341" "8943409" "20050044189" "20110208506" "8307390" "20080146342" "8775938" "20090319599" "20090240828" "7101284" "8244663" "20100026912" "20110055864" "20100070355" "20090098943" "20080084400" "7647560" "20100150105" "20090240768" "20100082835" "20060265637" "8029364" "8868763" "7500916" "20090171715" "20070168287" "20120220222" "20050091597" "20050251732" "20110176555" "20080273077" "20030167318" "8731380" "7433546" "8949450" "9063941" "8370520" "20090106315" "7050124" "20080046948" "20080120501" "8923325" "20070282972" "7115034" "20080249986" "20070192806" "8137200" "20070294772" "8001418" "7904580" "20060019747" "7711791" "8190674" "20080096663" "20080301465" "8554938" "20090327941" "7908415" "8346540" "20040242224" "20060167997" "8281332" "20090319557" "20080154404" "7673083" "20090240827" "20080189390" "20060020724" "20120076197" "9064369" "20110185378" "20060020901" "20110265018" "20100085857" "20110111862" "7882563" "20060277098" "20080281675" "20090198358" "20040148399" "20050286546" "20070201502" "7519911" "20090106258" "20100180201" "7326117" "20020065074" "20080181573" "20090106104" "20060245742" "20060075427" "7769903" "8151259" "20050175324" "20090132924" "20140289623" "8626830" "20090327341" "6024643"	US-PGPUB; USPAT	OR	OFF	2016/07/06 12:42

		"20100131613" "20040103300" "20070155310" "20080162668" "6908390" "8140973" "8209385" "7917645" "7480727" "20070204003" "9002885" "20090049074" "20050169467" "7761816" "20070298840" "20050096125" "20100205049" "7219308" "20040133914" "20030126035" "20080021957" "20050278256" "20090290850" "20080120666" "20080120656" "7043479" "8190704" "20070118606" "20080077483" "8150937" "20050078944" "20120254456" "20110145879" "20100235438" "6939233" "20110271227" "20060292537" "7421656" "8370878" "20030097379" "20060154729" "20070282898" "7426637" "8984626" "20060206492" "20100287580" "7056217" "20080034029" "6816883" "20130158690" "20100132005" "20100105361" "20060206493" "20080201658" "20100293389" "7483958" "7313591" "20070186003" "8972860" "5899810" "20120054615" "20140289622" "20050193017" "20080170477" "8856118" "7895311" "20110246616" "20090282057" "6725258" "20090287790" "20090325712" "20100138761" "20120059847" "8015200" "20110106283" "8667544" "20100057928" "9009066" "20100131104" "20050123135" "7958377" "20100325646" "8190751" "20090276324" "6800031" "20090209350" "8606848" "8931010" "6106395").pn.				
S143	200	("8078665" "6990512" "7860996" "6834308" "20070011264" "7316033" "8355671" "20120251071" "7739584" "8271333" "7899808" "8578502" "20060112144" "20040220879" "8202166" "20100281174" "20040230655" "8571936" "8275746" "20070250193" "6942574" "7194235" "20070269030" "20060092938" "8561202" "8886762" "7882435" "8321905" "20100281534" "8713304" "8706160" "20050125838" "20050111663" "8918806" "20110099444" "8626952" "20080276272" "20100235542" "20090150760" "8140407" "7644172" "20120072451" "8275880" "7415711" "20110072078" "7426329" "20090082110" "8239544" "20100254674" "8369249" "20110209063" "8849701" "8707288" "7695369" "20070294546" "8990119" "8515063" "7962751" "8875206" "8302005" "8266707" "7433930"	US-PGPUB; USPAT	OR	OFF	2016/07/06 12:42

		"20130167005" "20090282076" "20090185688" "8041401" "20130272681" "8150729" "20100131675" "20110170842" "7886069" "20100317443" "7570761" "20090209205" "7818321" "20080028023" "20050005146" "20090043870" "20090083629" "7623740" "20100172635" "20050179685" "20100077435" "20090124329" "8087091" "7590711" "8589779" "20100058377" "20090239573" "20050102379" "7155436" "20120017236" "20090106639" "20040148362" "8943545" "8806341" "20120130971" "6597891" "20060129490" "20080256463" "20060258419" "20120071237" "20070143493" "7975062" "8884886" "8107626" "8683516" "8280223" "8315950" "20100100636" "20110047247" "8612623" "7827298" "20040103297" "20020147699" "20100138746" "7178161" "8128498" "8503861" "20070156679" "20100106879" "8463875" "20080147558" "8704854" "20070100756" "20110010630" "20030132953" "8774951" "20010020944" "8047908" "8340795" "20110087603" "9028329" "20080320531" "7500007" "8376845" "20090113775" "7517282" "8375140" "7673062" "20050186998" "20100247062" "8219711" "8892634" "8346067" "8066566" "8977710" "20100199084" "9049494" "20090006524" "20030151618" "9067150" "20030120943" "20070186246" "20060020890" "8477143" "20130027314" "20080109844" "20090299725" "6587127" "8775655" "8246454" "20050172121" "7921446" "20090158382" "20070016865" "20090099671" "7686693" "20070094405" "20110161509" "8428257" "20070300155" "7155609" "20060069797" "20080155635" "7031931" "20100157978" "7881564" "20100283889" "7660416" "8489760" "8015491" "7593686" "7802095" "7765423" "20110069936" "20070100904" "20080046262" "20100094728" "8127036" "8868464" "20060146770" "20070136778" "7699706" "7343414" "20090282078" "20080301317" "7607582" "7716283" "7747703").pn.				
S144	200	("20090303197" "8301694" "20080059533" "20120036585" "8990104" "7930419" "20090106793" "20080165176" "20040186993" "8020099" "8234715" "8417096"	US-PGPUB; USPAT	OR	OFF	2016/07/06 12:42

"20060179109" "20090282158"
"20090125812" "20080189752"
"20110185393" "7890431"
"20050097623" "20110276335"
"7840631" "8241129" "20100257567"
"20080120561" "20030188175"
"8108642" "20060206340"
"20080235752" "8328642"
"20090220090" "20090091578"
"8155505" "7565036" "8977768"
"20110319169" "20080162358"
"20070204011" "7956848" "7478084"
"8239495" "8510615" "20110072348"
"20060069651" "7465231"
"20020013897" "8250663"
"20100004993" "20080288590"
"20070067315" "7995756"
"20090058822" "7631330" "8438656"
"20110008016" "20050172122"
"20090280905" "8628422" "8475279"
"20100281544" "20080222258"
"8370455" "20070006268"
"20110170004" "20040165006"
"7621814" "7031473" "20070288966"
"20110184744" "8689269"
"20100241855" "20080250238"
"7840769" "20090097643"
"20080071834" "20080216134"
"20060205516" "20100202764"
"20040140997" "20060020998"
"8568238" "20040242269"
"20050149969" "8935320" "8533284"
"20110145562" "8769614"
"20060288040" "8931104"
"20030158813" "7873706" "8935242"
"20110112915" "7464272"
"20040234253" "20080244003"
"20060059095" "9033785" "8655266"
"8112810" "8523663" "20110270742"
"8365235" "20040086120"
"20090222392" "8527525" "8260933"
"20110111854" "8616970" "8407146"
"8417937" "20080282083" "8112815"
"20100100915" "20040240842"
"20100023849" "20070055743"
"8122248" "20100332298" "8393967"
"20090013253" "20060161621"
"20100057779" "8209041"
"20070209005" "20070127523"
"7739715" "20070239546"
"20100041470" "8903895"
"20100064053" "8090659"
"20020169797" "20080155109"
"20060019751" "20110125755"
"20050025465" "20080250239"
"20120184349" "20090070267"
"8386621" "20110225302"
"20120150999" "20040236945"
"20060256130" "8571935"
"20080097632" "7555124"
"20060114787" "9065683"
"20100318809" "20100228758"
"8417797" "8108671" "20050261062"
"7578002" "6881148" "7743009"

		"8607143" "8117328" "20120066715" "8621338" "20050146534" "6948131" "20090117890" "20100099491" "20070230910" "20080009344" "7257309" "20100293581" "7676436" "20040267952" "20070088806" "7822866" "8272956" "9038116" "20070265979" "8267793" "20110234924" "8046689" "9077858" "8244315" "20050015551" "7702590" "8667299" "20030236907" "20050221882" "8122037" "20090063975" "20050015807" "8777753" "20020188760" "20060095472" "20090055510" "8055779" "20060223606" "20060223607" "20070124791" "20090186700" "20080176658" "20080193100").pn.				
S145	200	("20080098101" "8112539" "8543720" "20070273714" "8200629" "7708635" "20100273553" "7721032" "20060018205" "20060211471" "8117550" "9015225" "8046586" "20090287324" "20110072081" "20060149678" "8510769" "20060223608" "8290929" "20080031592" "20080133938" "7590659" "20040123103" "7707614" "8606071" "20090070673" "20060149632" "20080101604" "20060111188" "8000581" "8285118" "8266214" "20080134297" "8260858" "20060100009" "20080229353" "7753788" "20100146145" "20050081155" "20090276313" "20120017150" "20060240890" "20110173163" "20080160910" "20110053693" "20080005801" "20110197129" "20030120541" "20030186745" "20100325660" "8745388" "20060218195" "8364011" "20090063974" "20070156855" "20110119149" "20080148349" "20090124380" "7647614" "20110167140" "20060123131" "8775659" "8914360" "20090163281" "8522300" "20110035462" "7769829" "8417827" "20090323260" "20040133794" "20080046599" "7499863" "8321401" "8060638" "20070220580" "20090013059" "20090119720" "7870385" "8544050" "7610394" "8056109" "20090234476" "20060156412" "20070238499" "6372974" "20060217174" "9037466" "20110029386" "8460109" "8769558" "20080281448" "20100325239" "20090182889" "20080317441" "20080120347" "8775314" "20040078357" "20080155129" "20100114846" "20130282800" "20070243925" "20040187027" "8549097" "20080235580"	US-PGPUB; USPAT	OR	OFF	2016/07/06 12:42

		"20090271706" "20110320628" "20090007188" "20010016869" "20100281093" "7020704" "8789086" "20100325238" "20100011054" "20040244031" "9078049" "20110154173" "20070185972" "20100167823" "20090012935" "7956272" "8433812" "7536474" "7240093" "20070168463" "20050204126" "8083591" "7054888" "8611428" "20100100444" "20070297755" "6452609" "20110176786" "8627205" "7278920" "20070099703" "20060242259" "20130163953" "20080103974" "7386798" "8185579" "20090304359" "20060025220" "8239504" "7509178" "20070204115" "7506019" "20100185775" "20050080743" "8779266" "20080208378" "7089425" "20080004978" "20080159724" "20090177303" "20080147873" "20050181878" "8358273" "8644503" "8348759" "7735012" "7779357" "20100315549" "7519667" "20070213107" "8826445" "8812600" "20070066404" "8506402" "20060029093" "20090131141" "20070250849" "20090228578" "20090193474" "20110106962" "6330593" "7584353" "20090006963" "20060021057" "20070149281" "7803052" "20070011279" "20070192428" "8805830" "20050155068" "8218764" "6816909" "7107045" "7343347" "8565577" "8874436" "20020104096" "20080091529" "8752199" "7310729" "20100049741" "20100211968" "20090282093" "20070271366" "20090282077" "8019200").pn.				
S146	200	("7493289" "20050245317" "6679777" "7475155" "8818169" "8464163" "7941582" "8763058" "20090228544" "20080026732" "20040068536" "20020069412" "7136874" "20050013589" "6154773" "8156046" "20070167216" "8464164" "20090254827" "20090282050" "20060287054" RE41331 "8655953" "20090182445" "20090172542" "8005419" "7985134" "8738615" "7338372" "8019885" "20040248561" "20130212222" "20060031257" "20100184517" "7647297" "9003050" "20060288165" "20080234043" "20080132311" "20080169930" "20100088602" "20120071244" "7930369" "8018455" "20070244880" "9003455" "20070283449" "8970668" "7783703" "20130163580" "8805939" "8589580" "7979557" "8046790" "20110087600" "20080109851" "8506404" "20060179048"	US-PGPUB; USPAT	OR	OFF	2016/07/06 12:42

		"20090157500" "20100075750" "7444388" "8001471" "8943210" "20100042235" "7503006" "8973153" "20100138581" "20100071076" "20100100818" "20110145428" "6944185" "20070191008" "8799408" "20110135283" "8409010" "20040033821" "20110067066" "20110064378" "20120194734" "20110067099" "20070180383" "7558870" "8605097" "7938727" "20120203830" "20090227375" "20090077469" "8402155" "6199076" "20110064377" "20090005141" "7796190" "20060168150" "20130024539" "20110066489" "20100293598" "8090606" "20090265750" "20110137976" "20110066942" "8255331" "20050216417" "20070050458" "20110066944" "20110066663" "8239559" "8181115" "20110150414" "20120246585" "20040254960" "20070204057" "20080103976" "20090204541" "8233366" "20090290710" "20070248328" "20080183840" "20060153040" "6801964" "20050183017" "6856990" "20090307199" "8631351" "20140032636" "8086651" "20040098754" "8190680" "20110181781" "7177950" "7809789" "20110064385" "8122474" "8814692" "7806408" "7469346" "20110063508" "20080027992" "7904964" "7281214" "8078685" "20060188096" "20110064386" "20110093891" "20060002681" "20080184127" "20070243934" "20090215531" "20120042047" "20090041244" "8069262" "20090305788" "7966374" "20070262952" "8348762" "8025569" "20050096005" "7877776" "20090319925" "20110063317" "20080184359" "9021060" "20080212944" "20110246657" "7753797" "20040128364" "20100262833" "8639086" "7734688" "20080086423" "20080288097" "20080222243" "7197049" "20120207441" "8645599" "20090193032" "20090069915" "8316300" "20080182510" "8180645" "8429696" "9003539" "20080160909" "20080189295" "20090205003" "8161562" "20070276866" "20070191101" "20110176790" "20120323349" "8683337" "20080184317" "20080160908" "8482673" "7702805" "20130097302" "20080175566" "20070006079" "8094168" "20070094276" "8777737").pn.				
S147	200	("20090210415" "20110099286"	US-	OR	OFF	2016/07/06

		"20100104255" "20080180401" "20080163302" "20100169455" "20040013416" "8088001" "20050278257" "6876901" "8244898" "20080182509" "20080182508" "20060217173" "20050172309" "20130022335" "20080187115" "20080162655" "20130022185" "20080168133" "20040022391" "8739234" "20080010372" "20070191102" "20100325544" "20070214182" "9049472" "20120047222" "20050066339" "20090158326" "20060259355" "8170468" "8485881" "20100087251" "20090275285" "20060095401" "20100023885" "7562394" "20100218208" "7941500" "20110125878" "20030188183" "20090181769" "20110004669" "20070245376" "20090300145" "20080178238" "8430745" "20090106442" "8303413" "20040168052" "20120042309" "20090150557" "20090025085" "20040240861" "7806761" "9081976" "20030216958" "20050188310" "20110035258" "20040267715" "7797442" "8117651" "20080062894" "7984377" "20060095471" "20100198732" "8020762" "20110099225" "7206766" "8202161" "20090088235" "20050135792" "20110105226" "20080276158" "20060015560" "20120251077" "8782269" "8282459" "7502471" "20030076345" "20090157553" "8038523" "20090300202" "7717783" "7617272" "8038520" "8775665" "20070006061" "20110289178" "8668590" "20050165849" "20020171760" "8615160" "7593744" "20070192445" "20090062015" "7462104" "8840475" "8621533" "20080081700" "20110207525" "20110055016" "8914603" "20040254956" "8197324" "20040078382" "8392600" "20040133467" "20040181490" "20070006078" "7877687" "20090225093" "20060164932" "20070248326" "20080305738" "6993509" "7837557" "8606942" "20110169913" "8032004" "20110197237" "7917643" "8602866" "8028038" "8078748" "20070033419" "20070198744" "20100169461" "20110296057" "20080130886" "20110035467" "8234385" "20110035668" "20090150918" "8086575" "20110302317" "8253649" "20090204481" "20080195692" "20080086494" "7699703" "20090327449" "20080288099"	PGPUB; USPAT			12:42

		"9060187" "7343419" "20110112914" "20080137848" "20080049935" "8181110" "20100195977" "8230099" "20060111172" "20110090645" "20110231660" "20110213837" "8548946" "7228341" "7929551" "20020141582" "20070214234" "20080005171" "20080037781" "6463078" "20030078102" "7533061" "7797374" "20060155914" "20050252958" "20080109841" "20120014558" "20050164793" "20050108320" "8370732" "8556724" "20080005179" "8775321" "6538665" "20110009051" "8051454" "8239359" "7300352" "8285809" "8287341" "20070174866" "20060280437" "8028073" "7010213" "20100125741" "7840984" "20060227673" "20060123058" "7878808" "20050071375" "8892761" "20040172481" "20060288111" "8066568" "20100185729" "8095566").pn.				
S148	200	("20060020879" "20060068907" "20080008439" "20030208300" "20030172033" "20050240588" "20110150430" "20110145726" "7241219" "20100083307" "20080274796" "8825468" "7881656" "20100110200" "20060008256" "20080117926" "20020169970" "8909023" "8468130" "7617278" "8893195" "20060239657" "20120030436" "20120030706" "7913157" "8150918" "7428572" "7611409" "20030237043" "6262724" "20080222520" "20080124054" "9021522" "8682145" "20090254607" "20110255842" "20090147952" "20060059526" "7686215" "7412459" "7702592" "20100223337" "8246468" "7871327" "7792925" "8485878" "20080155470" "7318196" "8167723" "8856641" "8543785" "20090118017" "8282484" "7946918" "20080178242" "20060128469" "20100094900" "8170123" "20060146772" "20120184362" "20050059378" "20110202842" "9009337" "8631334" "20100042920" "7753790" "20100191860" "7783773" "6192340" "20090117994" "20090234472" "7536355" "7966414" "8543095" "7925897" "20090182817" "20100082585" "20090193138" "8721448" "8090779" "20090300139" "20050017988" "7165219" "8175097" "20060211470" "20100077290" "20090163273" "7580526" "20090118001" "7841946" "20090118005" "20090115133" "20080127278" "8700739" "20070083467" "8688841" "8484563"	US-PGPUB; USPAT	OR	OFF	2016/07/06 12:42

		"20020088011" "20040152054" "20080013274" "20040024580" "7113918" "20120124123" "6850256" "7559089" "20120233036" "7315984" "20080028170" "20060072046" "20080055314" "8516035" "20100121911" "8346762" "7706637" "8245142" "20120066768" RE45531 "20030115351" "20100056280" "8707181" "8874725" "20080155297" "20040078832" "20080214103" "20100023144" "8086902" "8522142" "20090093306" "8074083" "7491123" "20090325709" "9054891" "8301715" "7523507" "20060178187" "20100027966" "20090118006" "8056139" "8266637" "20100064332" "20080209487" "20100011392" "20070265091" "6908389" "20080094400" "20090222862" "20070100787" "8296675" "20100274664" "8441338" "20100023893" "20060004778" "7797471" "20080090659" "7962640" "20070247551" "7690992" "20090132453" "8262466" "20080201375" "8438602" "20090025024" "8068716" "20070191104" "7069590" "20030083940" "7529870" "7814220" "7949810" "20110195790" "8317618" "8151199" "20090216683" "7623502" "20090253476" "20110081127" "20100010648" "20120054616" "20080133611" "7401150" "20080219638" "20060072596" "8397305" "20080028037" "20100268680" "8352544" "20040148424" "20110138429" "8438297" "7529871" "20080288096" "7991268" "8069255" "8661464" "20090248672" "20090193338" "20090183207" "6996236" "8016677" "20030211889").pn.				
S149	200	("20070022464" "8926395" "20080082576" "7877532" "8631451" "8131865" "20030126211" "7526588" "7951000" "20080065992" "20060084488" "7786367" "8135891" "7458025" "8539525" "20070281768" "20090132712" "8292626" "8655146" "8407809" "20100247061" "20130254340" "8447421" "20110111859" "20050246654" "8224752" "20120066289" "20060159068" "20110067115" "8484721" "20070248311" "20090265549" "8082376" "20070162611" "20090296552" "7647277" "8387083" "8444485" "20070006064" "7725557" "20080033990" "20030093548" "8214545" "8687042" "20080287190" "7844661" "7976372" "6113495"	US-PGPUB; USPAT	OR	OFF	2016/07/06 12:42

"20090060182" "20070282969"
"7779185" "20050273491" "9055194"
"20090265557" "20090265793"
"20090265789" "20120028714"
"8122475" "20090265746" "8428421"
"20060246984" "20080189354"
"20090112839" "20090164034"
"20110229107" "20100158101"
"7778971" "20090287567" "8918195"
"7340526" "20080177860"
"20110072366" "8171194" "7941761"
"20100146544" "20090275412"
"20080115045" "20060177198"
"20090070184" "20050026693"
"20110087971" "7548948"
"20070250870" "8381310"
"20050075166" "7805051" "8135769"
"8206224" "20070250781" "8838693"
"20120041954" "20030009343"
"20060029013" "20080270881"
"20060293969" "7896743"
"20050273553" "8171195"
"20070011225" "7882356"
"20060258446" "9071796" "7945636"
"20100049719" "20100306428"
"20120210216" "20090049385"
"20120059884" "8571991" "8357046"
"8271115" "7925300" "20120197419"
"8131898" "20090325706"
"20090132072" "20070245378"
"20050060542" "7492769"
"20100046917" "20090248802"
"20100250761" "20080120389"
"20110167170" "8196043" "7609835"
"7110982" "8968077" "20080114645"
"8359657" "20110022519"
"20100161091" "20100076958"
"8458147" "20070021972" "8585501"
"20030115146" "20080244644"
"8060909" "20110238520"
"20090210079" "8121952"
"20060287099" "20070061497"
"20120284421" "20060293991"
"8112361" "8713443" "6241612"
"20010042107" "7702723"
"20080212945" "8099536" "7535465"
"20080235286" "8555395"
"20060287097" "20090158443"
"8366531" "20070077784"
"20100037320" "8307392" "7245817"
"20080155057" "8544033"
"20100287472" "20110041063"
"20100154035" "7690043"
"20080089548" "6846238"
"20030231861" "8612643"
"20090204738" "20110211114"
"20090063277" "7581182"
"20070006080" "6582310"
"20090046838" "8275360"
"20070011237" "8352996" "7536565"
"20100064000" "20060209174"
"7987148" "20020162106"
"20070245377" "20080229215"
"20070213111" "20070129140"

		"20090164032" "20100064055" "20100304860" "20120252557" "20120050185" "20090089846" "8694665" "8738787").pn.				
S150	200	("20050010952" "8731381" "20080235588" "20080146338" "8775647" "7698467" "8888592" "20080250061" "20080063353" "20090124387" "20120079605" "7756792" "7111240" "8682750" "6256268" "20090204244" "7616097" "20100014833" "7904537" "7469410" "20080201376" "8996409" "20110201388" "20050246458" "20110093877" "7783070" "20060135230" "20090088240" "20070111776" "20070168540" "7917477" "8554616" "20070067301" "7529872" "20080194175" "20110119586" "8155336" "20110126255" "20070004519" "7966362" "8233916" "6641481" "8341037" "8180895" "20020107802" "20110122063" "20090088257" "20120185530" "5911582" "20080147214" "20080307454" "7085845" "20090093311" "20090088258" "7441020" "7722467" "7991738" "8046428" "20080172413" "20130038702" "20060206581" "20070247794" "20090013347" "20030009770" "8086226" "8341282" "20070220111" "20100333129" "20110172013" "20060095848" "20030115147" "20070213857" "7707246" "7681238" "20060190410" "7730165" "20070006063" "8244896" "20100285858" "20050283791" "20120198088" "20090276068" "20080270532" "20090132377" "7681200" "20120042134" "20080254897" "6884170" "9061207" "20070026944" "20100235743" "20090282088" "20080254891" "7698301" "8321690" "20100010884" "20050076061" "8184943" "20020068525" "20110123175" "6990671" "20020194608" "20100088716" "8069232" "20080155634" "8376846" "6364765" "8255552" "7789757" "8533259" "20030149668" "20120052941" "20080281943" "20110125298" "20100192188" "20070259710" "8243924" "20040064504" "20060242275" "20080254878" "8171410" "20070056013" "20130024951" "8348716" "8771066" "20080254892" "20020165923" "20090082104" "5957695" "8403757" "20090018682" "20080098301" "7761339" "20080102947" "20060218618" "7115035" "6622171" "20110188199" "7996775" "7765280"	US-PGPUB; USPAT	OR	OFF	2016/07/06 12:42

		"20120166668" "8812673" "20070265093" "8739294" "20050276572" "20050180567" "20110219460" "8429123" "8944917" "20150205628" "20040193900" "7685210" "7526778" "20100005183" "8755919" "6748537" "20070185892" "20090281888" "8750115" "7877798" "20090198361" "20040128198" "8959154" "7603113" "20070204349" "6715126" "20080033725" "20030135465" "6385596" "8291004" "20070240030" "20040025185" "8341752" "8523673" "20100250669" "20100332723" "7990809" "20070230904" "8784196" "20110098109" "20060179153" "20070038567" "20120117193" "7757241" "20030190950" "8271022" "20090191855" "20030190951" "20050025466" "8296763" "20070066392" "8468567" "8132263" "20070082720" "5679075" "8544046" "20080096668" "20060204211" "20090222117" "8172677").pn.				
S151	200	("7729946" "20020069418" "8473739" "20050193209" "20030134678" "8065394" "7376414" "20060121965" "20110126113" "20100195975" "20120218381" "20100131977" "7085842" "7930367" "8412840" "20030103079" "7303473" "8285901" "7149772" "8560950" "20100251121" "8909729" "20120254364" "8271038" "20030185395" "8577420" "20060218294" "8930405" "20090082105" "20060085862" "20100253764" "20030112262" "8585502" "8628414" "20090113315" "4785472" "20090187825" "20080107405" "7881476" "20070067243" "8403748" "6903779" "20080155062" "20070250512" "20050015464" "7258614" "20100008650" "8855275" "8684748" "6868403" "20120021825" "20050039128" "7606118" "8234572" "20100113140" "20090085724" "7353270" "20060265503" "20120157199" "20130340012" "20030115598" "8379540" "20100312931" "6990497" "20100169464" "20070076547" "20090172820" "7707224" "20100036759" "6843724" "8843589" "20090222739" "20100325022" "7611408" "20100124404" "20060025216" "8152634" "8727882" "7997494" "20090094160" "8160495" "20050251807" "9043467" "6170060" "8706867" "8751343" "20080307463" "20080307462" "20080103977" "20080205205" "20040209692" "20040140998" "7558463"	US-PGPUB; USPAT	OR	OFF	2016/07/06 12:42

		"20080307456" "7454019" "7164075" "5788507" "20050212214" "7865745" "20080097915" "7165725" "20060265409" "8793256" "20080224988" "8959660" "8491391" "9043276" "7356575" "20100057470" "8131646" "20100312932" "20090136218" "20070232098" "8230004" "20070055728" "20050272504" "20080152316" "20080208379" "8291236" "7668438" "20100070385" "7299291" "20120197897" "7634605" "8768744" "8788078" "20100035692" "20140143687" "20070216600" "20110083074" "20070006062" "20110231658" "20060259930" "20090106847" "20090076898" "7734800" "20090062944" "7778980" "8756160" "20070093277" "20030043191" "20140259166" "20110231872" "20060190616" "7698178" "7086946" "20100049835" "7844498" "8468369" "8753199" "8731371" "20050262449" "20100125646" "8713026" "20110029873" "8622552" "20070067241" "8401187" "20040267899" "8230044" "20020112004" "20070087838" "20020138593" "8359591" "20020055386" "20120033140" "8393948" "20110181518" "20060230038" "20110028221" "7596582" "20120226780" "8353757" "20070299874" "7539307" "20060036488" "20070101361" "20020098885" "20100161825" "20080113614" "20040032348" "20100042654" "20090259926" "6888477" "20120210373" "20080288098" "20070055997" "20030084126" "8725063" "20060080741" "20070236482" "20140033025" "8996145" "20090117846" "20080176540" "7984511" "7636754" "20090100092" "20060041640" "7644173").pn.				
S152	100	("8429365" "20040259621" "8239595" "20110149158" "20020190876" "8608536" "7761414" "20100036748" "20090136029" "7113999" "8282479" "8930561" "7802004" "8225359" "7844722" "20080107170" "20060044951" "7796941" "7566274" "20090119169" "20050157600" "20110066776" "20110208336" "8469813" "8608537" "20040064835" "7613691" "20070291709" "8682722" "20060090122" "5839905" "8893022" "20090315670" "20070266123" "8774602" "20110317831" "20030217170" "20070237494" "20090061927" "20060059223"	US-PGPUB; USPAT	OR	OFF	2016/07/06 12:42

		"9063755" "6692353" "8973083" "20060265667" "7160191" "20040117442" "6507727" "8055688" "20060232449" "20110295393" "7627343" "20110066775" "20020046095" "20040205811" "20050114205" "8413038" "8251811" "20130298154" "20090006695" "8595854" "7920901" "20090215540" "8120707" "20070132660" "8473976" "20120062471" "20090093312" "20100287480" "20060117344" "7610310" "8364024" "9055315" "20080268959" "20080086689" "20070233295" "20060206561" "8458053" "20070006065" "20060123185" "20110066673" "20090319901" "20100269030" "7920856" "8419548" "7997582" "8386414" "20100169463" "20070260742" "20030061280" "20120192229" "8174827" "20060046851" "20080281685" "6253237" "8230097" "8632400" "7303470" "20080201751" "20080256563" "20080076495").pn.				
S153	2500	S140 S141 S142 S143 S144 S145 S146 S147 S148 S149 S150 S151 S152	US-PGPUB; USPAT	OR	OFF	2016/07/06 12:42
S154	57	S153 and swappable	US-PGPUB; USPAT	OR	OFF	2016/07/06 12:43
S155	220	S153 and swap$9	US-PGPUB; USPAT	OR	OFF	2016/07/06 12:44
S156	1	S153 and swap$9 same (first with second with instance)	US-PGPUB; USPAT	OR	OFF	2016/07/06 12:45
S157	9	S153 and "media player" same (first with second with instance)	US-PGPUB; USPAT	OR	OFF	2016/07/06 12:46
S158	6	S153 and switch$3 same (first with second with instance)	US-PGPUB; USPAT	OR	OFF	2016/07/06 12:54
S159	38	S153 and display$3 same (first with second with instance)	US-PGPUB; USPAT	OR	OFF	2016/07/06 12:57
S160	0	S153 and display$3 same (first with second with instance) same opening	US-PGPUB; USPAT	OR	OFF	2016/07/06 12:58
S161	38	S153 and display$3 same (first with second with instance)	US-PGPUB; USPAT	OR	OFF	2016/07/06 12:58
S162	0	S153 and display$3 same (first with second with instance) same codec	US-PGPUB; USPAT	OR	OFF	2016/07/06 12:59
S163	12	S153 and display$3 same (first with second with instance) same player	US-PGPUB; USPAT	OR	OFF	2016/07/06 12:59
S164	2	"20090248802"	US-	OR	OFF	2016/07/06

			PGPUB; USPAT			16:11
S165	1	("20090248802").pn.	US-PGPUB; USPAT	OR	OFF	2016/07/08 15:02
S166	1	("20090248802").pn. and "214"	US-PGPUB; USPAT	OR	OFF	2016/07/08 15:04
S167	1	("20090248802").pn. and conver$7	US-PGPUB; USPAT	OR	OFF	2016/07/08 15:05
S168	1	("20090248802").pn. and generic	US-PGPUB; USPAT	OR	OFF	2016/07/08 15:09
S169	54	("20020120666" | "20030193520" | "20070202923" | "20080008439" | "20080028037" | "20100205628" | "7424718" | "20050034151" | "20090108057" | "20030004804" | "20060083194" | "20110231265" | "7769827" | "20050144305" | "20060098624" | "20060101098" | "20070094408" | "20080267369" | "20110030020" | "20110060998" | "7058356" | "20090172780" | "20120102209" | "20020133518" | "20080126943" | "20100137028" | "20110138354" | "20110214148" | "20110296465" | "7330875" | "20100027974" | "20110131607" | "20030023488" | "20030028565" | "20100281042" | "20110090898" | "20110107227" | "20070155506" | "20020198778" | "20060203758" | "20080270881" | "20090228919" | "0783505" | "20070288715" | "20030018885" | "20040088728" | "20080155600" | "20100265939" | "20110231566" | "7440972" | "20030005000" | "7849485" | "20080077526" | "20120059875").PN.	US-PGPUB; USPAT	OR	OFF	2016/07/09 09:21

EAST Search History (Interference)

<This search history is empty>

7/9/2016 2:32:56 PM
C:\Users\dhope\Documents\EAST\Workspaces\13532546amd.wsp

Search Notes	Application/Control No.	Applicant(s)/Patent Under Reexamination
	13532546	STROBER, DAVID
	Examiner	**Art Unit**
	DARRIN HOPE	2173

CPC- SEARCHED

Symbol	Date	Examiner
G06F3/01	11/3/2014	DH

CPC COMBINATION SETS - SEARCHED

Symbol	Date	Examiner

US CLASSIFICATION SEARCHED

Class	Subclass	Date	Examiner
715/716		11/3/2014	DH

SEARCH NOTES

Search Notes	Date	Examiner
EAST	7/25/2015	DH
EAST	7/8/2016	DH

INTERFERENCE SEARCH

US Class/ CPC Symbol	US Subclass / CPC Group	Date	Examiner

To: PATDOCTC@fr.com,,
From: PAIR_eOfficeAction@uspto.gov
Cc: PAIR_eOfficeAction@uspto.gov
Subject: Private PAIR Correspondence Notification for Customer Number 26211

Jul 15, 2016 05:39:54 AM

Dear PAIR Customer:

FISH & RICHARDSON P.C. (NY)
P.O. BOX 1022
MINNEAPOLIS, MN 55440-1022
UNITED STATES

The following USPTO patent application(s) associated with your Customer Number, 26211 , have new outgoing correspondence. This correspondence is now available for viewing in Private PAIR.

The official date of notification of the outgoing correspondence will be indicated on the form PTOL-90 accompanying the correspondence.

Disclaimer:
The list of documents shown below is provided as a courtesy and is not part of the official file wrapper. The content of the images shown in PAIR is the official record.

Application	Document	Mailroom Date	Attorney Docket No.
13532546	CTNF	07/15/2016	30160-0005001
	892	07/15/2016	30160-0005001

To view your correspondence online or update your email addresses, please visit us anytime at https://sportal.uspto.gov/secure/myportal/privatepair.

If you have any questions, please email the Electronic Business Center (EBC) at EBC@uspto.gov with 'e-Office Action' on the subject line or call 1-866-217-9197 during the following hours:

Monday - Friday 6:00 a.m. to 12:00 a.m.

Thank you for prompt attention to this notice,

UNITED STATES PATENT AND TRADEMARK OFFICE

PATENT APPLICATION INFORMATION RETRIEVAL SYSTEM

IN THE UNITED STATES PATENT AND TRADEMARK OFFICE

First Named Inventor	:	David Strober	Art Unit	:	2173
Serial No.	:	13/532,546	Examiner	:	Darrin Hope
Filed	:	June 25, 2012	Conf. No.	:	9012
Title	:	VIRTUALIZED HOSTING AND DISPLAYING OF CONTENT USING A SWAPPABLE MEDIA PLAYER			

MAIL STOP AMENDMENT
Commissioner for Patents
P.O. Box 1450
Alexandria, VA 22313-1450

INFORMATION DISCLOSURE STATEMENT

Please consider the references listed on the enclosed PTO 1449 Disclosure Form. Copies of the listed foreign patent documents are enclosed.

A copy of a communication from a foreign patent office in a related foreign application is also enclosed (listed as item 4) and indicates the relevance of the other listed foreign-language references.

This statement is being filed after a first action on the merits, but before receipt of a final action or a notice of allowance. A late submission fee in the amount of $90, specified by 37 CFR §1.17(p), is being paid with this statement. Apply any necessary charges or credits to deposit account 06-1050, referencing the above attorney docket number.

Please contact the undersigned if there are any questions regarding this Statement.

Respectfully submitted,

Date: July 28, 2016

/Samuel Borodach/
Samuel Borodach
Reg. No. 38,388

Customer Number 26211
Fish & Richardson P.C.
Telephone: (212) 765-5070
Facsimile: (877) 769-7945

30956246.doc

Substitute Disclosure Form U.S. Department of Commerce Patent and Trademark Office	Attorney Docket No. 30160-0005001	Application No. 13/532,546
Information Disclosure Statement by Applicant (Use several sheets if necessary)	Applicant David Strober	
(37 CFR §1.98(b))	Filing Date June 25, 2012	Group Art Unit 2173

U.S. Patent Documents

Examiner Initial	Desig. ID	Document Number	Publication Date	Patentee	Class	Subclass	Filing Date If Appropriate

Foreign Patent Documents or Published Foreign Patent Applications

Examiner Initial	Desig. ID	Document Number	Publication Date	Country or Patent Office	Class	Subclass	Translation Yes	Translation No
	1.	2006-525771 A		JP			See English counterpart in Desig. ID No. 2	
	2.	2004100500A2		WO				
	3.	2004-356695 A		JP			English Abstract	

Other Documents (include Author, Title, Date, and Place of Publication)

Examiner Initial	Desig. ID	Document
	4.	Japanese Patent Office, Examination Report for JP Patent App. No. 2014-506460, dated June 28, 2016 (6 pages) (and English Translation)

Examiner Signature	Date Considered
EXAMINER: Initials citation considered. Draw line through citation if not in conformance and not considered. Include copy of this form with next communication to applicant.	

Substitute Disclosure Form

(12) INTERNATIONAL APPLICATION PUBLISHED UNDER THE PATENT COOPERATION TREATY (PCT)

(19) World Intellectual Property Organization
International Bureau

(43) International Publication Date
18 November 2004 (18.11.2004)

PCT

(10) International Publication Number
WO 2004/100500 A2

(51) International Patent Classification[7]: H04L 29/12

(21) International Application Number: PCT/US2004/013859

(22) International Filing Date: 4 May 2004 (04.05.2004)

(25) Filing Language: English

(26) Publication Language: English

(30) Priority Data:
60/467,928 5 May 2003 (05.05.2003) US

(71) Applicant (*for all designated States except US*): THOMSON LICENSING S.A. [FR/FR]; 46, Quai A. Le Gallo, F-92648 Boulogne (FR).

(72) Inventors; and
(75) Inventors/Applicants (*for US only*): GRIMES, Kevin, Lloyd [US/US]; 12427 Haydon Court, Fishers, IN 46038 (US). BURNETT, Angela, Renee [US/US]; 6821 Bretton Wood Drive, Indianapolis, IN 46268 (US).

(74) Agents: TRIPOLI, Joseph, S. et al.; c/o Thomson Licensing Inc., 2 Independence Way, Suite 200, Princeton, NJ 08540 (US).

(81) Designated States (*unless otherwise indicated, for every kind of national protection available*): AE, AG, AL, AM, AT, AU, AZ, BA, BB, BG, BR, BW, BY, BZ, CA, CH, CN, CO, CR, CU, CZ, DE, DK, DM, DZ, EC, EE, EG, ES, FI, GB, GD, GE, GH, GM, HR, HU, ID, IL, IN, IS, JP, KE, KG, KP, KR, KZ, LC, LK, LR, LS, LT, LU, LV, MA, MD, MG, MK, MN, MW, MX, MZ, NA, NI, NO, NZ, OM, PG, PH, PL, PT, RO, RU, SC, SD, SE, SG, SK, SL, SY, TJ, TM, TN, TR, TT, TZ, UA, UG, US, UZ, VC, VN, YU, ZA, ZM, ZW.

(84) Designated States (*unless otherwise indicated, for every kind of regional protection available*): ARIPO (BW, GH, GM, KE, LS, MW, MZ, NA, SD, SL, SZ, TZ, UG, ZM, ZW), Eurasian (AM, AZ, BY, KG, KZ, MD, RU, TJ, TM), European (AT, BE, BG, CH, CY, CZ, DE, DK, EE, ES, FI, FR, GB, GR, HU, IE, IT, LU, MC, NL, PL, PT, RO, SE, SI, SK, TR), OAPI (BF, BJ, CF, CG, CI, CM, GA, GN, GQ, GW, ML, MR, NE, SN, TD, TG).

Published:
— *without international search report and to be republished upon receipt of that report*

For two-letter codes and other abbreviations, refer to the "Guidance Notes on Codes and Abbreviations" appearing at the beginning of each regular issue of the PCT Gazette.

(54) Title: SYSTEM AND METHOD FOR COMMUNICATING WITH A DISPLAY DEVICE VIA A NETWORK

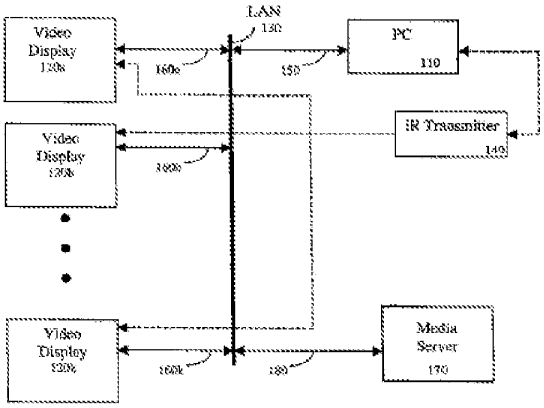

(57) Abstract: A system (100) and corresponding methods are provided for enabling communication with an electronic apparatus via a network. The system comprises: a first device (140) for transmitting a communication comprising identification parameters associated with a second device (110), wherein the communication is compatible with a communication protocol of a first electronic apparatus (120a, b …k); a first electronic apparatus for communicating with the second device, wherein first electronic apparatus comprises a first interface for wirelessly communicating with the first device and a second interface for communicating with the second device via a network (130); and a second device for communicating with the first electronic apparatus, with the second device communicating the first electronic apparatus via the network.

WO 2004/100500 A2

SYSTEM AND METHOD FOR COMMUNICATING WITH A DISPLAY DEVICE VIA A NETWORK

FIELD OF THE INVENTION

The present invention relates to communicating with an electronic apparatus and, more particularly, to a system and method for communicating with a video display device via a network.

BACKGROUND OF THE INVENTION

Electronic appliances such as video display devices may be controlled via a computer through a network connection. Adjustments such as changing the volume or color alignment are no longer performed by adjusting a knob on a video display device such as a television rather they are performed digitally by interfacing with a menu on the video display device's screen or via an infrared remote. The introduction of computer controlled video display devices has enhanced the features and capabilities of modern video display devices. For example, computer controlled video display devices can be electronically diagnosed for service or repair, subjected to automated testing and controlled to perform a variety of functions. In addition, these video display devices can be connected together via a local area network (LAN) using networking protocols such as Ethernet, token ring, asynchronous transfer mode (ATM), etc.

In order to perform a desired function such as the servicing or testing a computer controllable video display device, a number of communication techniques have been developed by video display device manufacturers and service providers to realize such operations. These techniques typically require a computer and an infrared transmitter, which are used by a service technician, to communicate with a computer controlled video display device. The communication channel between the computer and the video display device sometimes takes place over an Ethernet connection. For security reasons, however, the computer controlled video display device will typically only allow access to a computer that is compatible with the video display device, thereby, preventing an un-authorized user from gaining access to the video display device.

In order to communicate with a video display device via a computer, a service technician having knowledge of the video display device's IP address and port reconfigures the IP address and port of their computer. This process can be somewhat prohibitive due to a lack of networking knowledge by the service technician and the proliferation of operating systems that preclude the ability to automate the configuration and restoration of the computer's IP address. In addition, current

communication techniques prevent a service technician from communicating with more than one video display device at a time over a network.

Accordingly, there is a need for a system and method of communicating with one or more electronic appliances, such as a video display device, via a network where a service technician does not need extensive knowledge of networking environments.

SUMMARY OF THE INVENTION

In one embodiment of the present invention, a method for communicating with an electronic apparatus via a network is presented. The method comprises the steps of: receiving a communication comprising identification parameters associated with a computer, wherein the communication is compatible with a communication protocol of a first electronic apparatus; transmitting a request to establish communication with the computer associated with the received identification parameters, wherein the request is transmitted via a network; receiving a response to the request, wherein the response attempts to establish communication between the computer and the first electronic apparatus, wherein the response is transmitted via the network; and validating the response to the request to ensure that the computer to which the request to establish communication was transmitted is the computer associated with the received identification parameters. A system for implementing the described method is also disclosed.

In another embodiment of the present invention, a method for communicating with a media server for receiving media objects based on the properties of a display device is presented. The method determines the type of display technology used for a display device whereby the display device receives a media object that is optimized for visual playback for that display device. Display devices with different display technologies receive different media objects generated from the same source material.

BRIEF DESCRIPTION OF THE DRAWINGS

The present invention may be better understood in accordance with the following exemplary figures, in which:

FIG. 1 is a block diagram of a system for communicating with an electronic apparatus according to an exemplary embodiment of the present invention;

FIG. 2 is a block diagram of a personal computer (PC) for use with the present invention;

FIG. 3 is a block diagram of a control system of a video display device for use with the present invention;

FIG. 4 is a flowchart showing an operation of a system for communicating with a video display device according to an exemplary embodiment of the present invention; and

FIG. 5 is a flowchart showing an operation of a system for communicating with a video display device depending on the properties of the video display device according to an exemplary embodiment of the present invention.

DETAILED DESCRIPTION OF EXEMPLARY EMBODIMENTS

As used herein, the term "media object" includes audio, video, textual, multimedia data files, and streaming media files. Multimedia objects comprise any combination of text, image, video, and audio data. Streaming media comprises audio, video, multimedia, textual, and interactive data files that are delivered to a user via the Internet, satellite or other communications network environment and begin to play on the user's computer/ device before delivery of the entire file is completed. Media objects may be transmitted over any communications network including via the Internet, satellite (digital satellite system, digital video system-satellite), cable, digital subscriber line, T1 lines, wireless network, or other delivery systems capable of delivering media objects.

Examples of the content of media objects include songs, political speeches, news broadcasts, movie trailers, movies, television show broadcasts, radio broadcasts, financial conference calls, live concerts, web-cam footage, and other special events. Media objects are encoded in various formats including REALAUDIO®, REALVIDEO®, REALMEDIA®, APPLE QUICKTIME®, MICROSOFT WINDOWS® MEDIA FORMAT, QUICKTIME®, MPEG-2 (MOTION PICTURE EXPERTS GROUP) VIDEO COMPRESSION, MPEG-4 VIDEO AND/OR AUDIO COMPRESSION, JOINT VIDEO TEAM COMPRESSION FORMAT (MPEG-4 part 10 AVC, H.264), MPEG-2 LAYER III AUDIO, MP3®. Typically, media objects are designated with extensions (suffixes) indicating compatibility with specific formats. For example, media objects (e.g., audio and video files) ending in one of the extensions, .ram, .rm, .rpm, are compatible with the REALMEDIA® format. Some examples of file extensions and their compatible formats are listed in the Table 1. A more exhaustive list of media types, extensions and compatible formats may be found at http://www.bowers.cc/extensions2.htm.

Format	Extension
REALMEDIA®	.ram, .rm, .rpm
APPLE QUICKTIME®	.mov, .qif
MICROSOFT WINDOWS® MEDIA PLAYER	.wma, .cmr, .avi

MACROMEDIA FLASH	.swf, .swl
MPEG	.mpg, .mpa, .mp1, .mp2
MPEG-2 LAYER III Audio	.mp3, .m3a, .m3u

TABLE 1

The illustrated embodiments of the invention operate with media objects that contain video data for presenting a video presentation of "near to motion picture quality". Such media objects may be encoded in a variety of formats such as MPEG-2 (Motion Picture Standards Group Standard ISO/IEC 13818-1:2000) and ITU-T H.264/ MPEG AVC (ISO/IEC 14496-10), or may be uncompressed video. It is noted that the invention also operates with over the air broadcasted programming such as used for Advanced Television System (ATSC) or Digital Video Broadcasts (DVB) compliant video signals.

FIG. 1 is a block diagram of a system 100 for communicating with an electronic apparatus according to an exemplary embodiment of the present invention. As shown in FIG. 1, the system 100 includes, inter alia, a personal computer (PC) 110, electronic appliances, for example, video display devices 120a, b ... k, an infrared (IR) transmitter 140, and media server 170. The PC 110 and the video display devices 120a, b ... k, are connected together over a local area network (LAN) 130 via a pair of connection means 150, 160a, b ... k, and connection means 180.

The PC 110 may be a portable or laptop computer, a personal digital assistant (PDA), etc. that is capable of communicating with the video display devices 120a, b ... k using a communication protocol such as a factory defined or proprietary protocol that is capable of supporting a feature set of one of the video display devices 120a, b ... k. The video display devices 120a, b ... k may be digital video display device having enhanced-definition television (EDTV) and high-definition video television (HDTV) capabilities, and plasma, liquid crystal, organic light emitting, or cathode ray tube (CRT) displays, etc. The video display devices 120a, b ... k are also capable of communicating with a device such as the PC 110 and IR transmitter 140 via external interfaces, such as an interface menu at the video display devices 120a, b ... k, the connection means 150, 160a, b ... k or an infrared receiver. The IR transmitter 140 may be a common video display device remote control such as a universal remote control having infrared transmission capabilities. Video display devices 120a, b...k, are

also preferably capable of decoding received media objects using a media player application such as REALPLAYER or WINDOWS MEDIA PLAYER.

It is to be understood, that although the electronic apparatus of FIG. 1 is illustrated as one of several video display devices 120a, b ... k, the electronic apparatus can be any number of network devices such as satellite receiver, digital video disk (DVD) player, stereo equipment, etc., other personal computers, set top boxes, and which can be connected over a network and accessed via a client-server or peer to peer architecture.

The LAN 130 may use networking protocols such as Ethernet using a 10BaseT, 100BaseT or 1000BaseT standard, token ring, asynchronous transfer mode (ATM), etc. or any networking protocol that allows for automatic configuration and restoration of a video display device's internet protocol (IP) address. The connection means 150, 160a, b ... k, and connection means 180, may be a twisted pair cable capable of connecting the PC 110 and video display devices 120a, b ... k over, for example, an Ethernet network. The connection means 150, 160 a, b ... k, and connection means 180 may also be terminated with RJ-45 style Ethernet connectors, although other connectors may be used.

It is also contemplated that connection means 150 and 180 may be a connection to LAN 130 through the use of a network fabric, such as the Internet. The use the network fabric may be any type of network known in the art. Preferably, such a network is capable of accommodating multiple connections between resources at a server side of a server and at the client side of a client, such connections being UDP based, TCP/IP based, or a mixture of both. The bandwidth accommodated by network 150 is preferably a large bandwidth connection such as a T1 connection (1.5 Megabits per second, Mbps), T3 connection (45 Mbps), DS3 connection (45 Mbps), OC3 connection (155 Mbps), OC12 (248000 Mbps), and the like.

Media server 170 is a storage device such as a matrix of hard drives having a capacity of Terabytes and/or Gigabytes capable of storing multiple media objects. Media server 170 is also capable of delivering such media objects to display devices 120a...k through connection means 180 via LAN 130.

FIG. 2 is a block diagram of a PC 200 for use with the present invention. The PC 200 may be used in place of or in conjunction with the PC 110 of FIG. 1. The PC 200 includes a central processing unit (CPU) 210 and a memory 220 and, is connected to an input 230 and an output 240 via a data bus 250. The memory 220 includes a random access memory (RAM) 260 and a read only memory (ROM) 270. The memory 220 can also include a database, disk drive, tape drive, etc., or a combination thereof. The RAM 260 function as a data memory that stores data used during execution of a

program in the CPU 210 and is used as a work area. The ROM 270 functions as a program memory for storing a program executed in the CPU 210. The input 230 is constituted by a keyboard, mouse, connecting means, input device, etc. and the output 240 is constituted by a liquid crystal display (LCD), CRT display, printer, connecting means, etc.

It is to be understood that the CPU 210 and memory 220 include data associated with communicating via a number of communication protocols used by an electronic apparatus, for example, the video display devices 120a, b ... k of FIG. 1. The data associated with communicating with the video display devices 120a, b ...k includes, inter alia, identification parameters such as the PC's 200 IP address, port and password. Further, the PC 200 includes software stored in its memory 220 to provide service technicians with a method to diagnose and repair the video display devices 120a, b ...k. This software may be of the type commonly used by video display device service technicians such as, CHIPPER CHECK™ available from Thomson, to service and diagnose the problems of video display devices.

FIG. 3 is a block diagram of a control system of a video display device 300 for use with the present invention. The control system 300 includes, inter alia, a microprocessor (μP) 310, an electrically erasable programmable read only memory (EEPROM) 320 and output devices 340. The microprocessor 310, EEPROM 320 and output devices 340 communicate with each other via a data bus 350. An input 360 is connected to the microprocessor 310 and, a backend processor 330 is connected to the data bus 350.

The microprocessor 310 communicates with the output devices 340 such as light emitting diodes (LEDs), digital video interfaces (e.g., high definition multimedia interface (HDMI) 1394), infrared transmitters, etc. and the backend processor 330 to control a digital video display device such as one of the video display devices 120a, b ... k of FIG. 1. The microprocessor 310 also communicates with the backend processor 330 to perform backend processing such as video processing and, the backend processor 330 is also coupled to the output device 340 to control, for example, display parameters and to improve video quality. The microprocessor 310 also receives input 360 from a video display device's front panel, remote control, EEPROM 320 and any of the devices that are connected to the data bus 350. The EEPROM 320 stores values used by the microprocessor to control one of the video display devices 120a, b ... k. These values may include, for example, alignment information, initialization signals and customer information. Exemplary customer information may include a channel scan list, color, brightness and volume levels.

The EEPROM 320 includes information such as values associated with one of the video display devices 120a, b ... k that were stored in the EEPROM 320 when one of the video display devices 120a, b ... k were made. The EEPROM 320 also has the ability to have information written to it from an external device such as the PC 110 or IR transmitter 140. Thus, for example, the EEPROM 320 can store identification parameters written to it from the PC 110. These parameters may include the PC's 110 IP address and port, thereby allowing the PC 110 to communicate with one of the video display devices 120a, b ... k. Once the PC 110 is in communication with one of the video display devices 120a, b ... k, the PC's 110 service and testing software sends commands to one of the video display devices 120a, b ... k to perform a number of operations on one of the video display devices 120a, b ... k.

FIG. 4 is a flowchart showing an operation 400 of a system for communicating with a video display device according to an exemplary embodiment of the present invention. As shown in FIG. 4, a service technician transmits a communication to, for example, a video display device 120a of FIG. 1 (step 410). The communication is transmitted by, for example, the IR transmitter 140 of FIG. 1. It is to be understood that the communication may also be transmitted to the video display device 120a by accessing an interface menu on the video display device's 120a screen and inputting the communication. The communication includes parameters associated with identifying a PC, for example, PC 110 of FIG. 1 to the video display device 120a. These parameters include, inter alia, the PC's 110 IP address and port. It should be understood that the communication is transmitted via a factory defined protocol or a proprietary protocol that is compatible with the video display device 120a

After the communication has been transmitted, it is received by the video display device 120a (step 420). An infrared receiver located at the video display device 120a receives this communication. Upon receipt of the communication, the video display device 120a stores the identification parameters associated with the communication in a memory, such as the EEPROM 320 of FIG. 3 (step 430). This occurs, because the communication was transmitted via a protocol used by the video display device 120a that is considered safe to communicate with, thereby permitting data associated with the communication to be stored. Once the identification parameters, which include the PC's 110 IP address and port, are stored in the video display device's 120a memory, the video display device 120a transmits a signal to the PC 110 (on the port specified in the communication of step 410) in an effort to establish communication between the video display device 120a and the PC 110 (step 440). In other words, the video display device 120a is attempting to complete a handshake with the PC 110 by transmitting a message via a handshaking protocol telling the PC 110

that it has received the PC's 110 identification information and is ready to receive further communication from the PC 110.

Upon receipt of the video display device's 120a request to establish further communication, the PC 110 responds to the request by transmitting a communication indicating that it is the device with which the video display device 120a should be communicating (step 450), thereby completing the handshake. This handshake assures both the video display device 120a and the PC 110 that they are connected to each other and not an imposter or an unauthorized user and, is possible because the PC's 110 IP address and port were programmed into the memory of the video display device 120a by the service technician in step 410. It is to be understood that in this configuration the video display device 120a functions as a client and the PC 110 functions as a remote server in client-server software architecture.

After a secure communication channel between the video display device 120a and the PC 110 is established, the PC 110 may then communicate with the video display device 120a to perform a desired function on the video display device related to, for example, servicing or testing (step 460). The function to be performed may be one of a color, geometry, video, stereo or picture-in-picture (PIP) alignment, or an adjustment to various calibration values associated with picture quality, etc.

In an alternative embodiment of the present invention, the PC 110 of FIG. 1 can communicate with more than one electronic apparatuses, such as the video display devices 120a, b ... k. This is accomplished by transmitting the PC's 110 IP address and port to, for example, the video display device 120b, when the PC 110 is already in communication with the video display device 120a (by performing the same or similar process as described above in steps 410-450 of FIG. 4). In order to accomplish this, the PC 110 assigns a different port to the video display device 120b. Once the steps 410-450 are completed the PC 110 may then begin to perform a desired function on the video display device 120b, while still performing desired functions on the video display device 120a. When performing functions on more than one video display device, the PC 110 can have separate windows for each video display device on an output such as an LCD display.

It is to be further understood that the PC's 110 IP address and port (for video display device 120b) can be transmitted to the video display device 120b at the same time the PC 110 IP address and port (for video display device 120a) are transmitted to the video display device 120a. Thereby, enabling a service technician to connect and then communicate with more than one video display device simultaneously.

By communicating with more than one video display device the PC 110 offers flexibility to a service technician, because they are not limited to performing functions

on one video display device at a time. In addition, by having control of more than one video display device or electronic apparatus a service technician and/or authorized user of the present invention may for example, simultaneously turn multiple video display devices off or on, change channels, volume, etc. or view, for example, the same movie on several DVD players.

In an alternative variant of the present invention a computer's identification information may be transmitted wirelessly from a transmitter using Bluetooth, Institute of Electrical and Electronics Engineers (IEEE) 802.11 or Infrared Data Association (IrDA) wireless transmission technologies.

FIG. 5 is a flowchart disclosing a method 500 for communicating with a video display device to receive a media object depending on the properties of the video display device. Specifically, it is recognized that with the development of video display device technologies such as OLED, plasma, LCD, and the like, there may be variances in the rendering of media service on a display device. For example, a media service encoded with MPEG-2 video codec may be of a motion picture quality when displayed on a Cathode Ray Tube (CRT) display device but may be blurred when rendered on an OLED display device.

The cause for the problem given in the example above pertains to encoding methodology used for encoding a media service. Typically, encoders use compression techniques that reduce the size of encoded media object from the original source material. For example, an MPEG-2 based encoder accomplishes a 40 to 50:1 type of compression when used to encode video based source material. Part of the compression takes advantage of techniques known as psychometric functions that are related to how human beings perceive media objects visually and aurally, where a percentage of data can be eliminated from source material without a human perceiving the loss of such data. The development of MPEG-2 and other encoding techniques are developed with humans being tested to determine what visual or audio information needs to be kept and what can eliminated from source material, see ITU Recommendation BT.500-8, "Methodology for Subjective Assessment of the Quality of Television Pictures," 1998, for background about testing human visual perception.

Additionally with the development of new display technologies, a human may be able to notice artifacts due to an encoding technique selected (for example, on an OLED display device) that would not be as apparent on a second display device (a CRT display). Continuing with the present example, it may be the case that a human would notice artifacts of the macroblocks used for MPEG-2 encoded video on an OLED display device that would not be apparent to a human on the CRT. This may due to the underlying physical properties of the display device technology used to render a video

image. Hence, the screen refresh techniques for the CRT may be better at hiding such artifacts of MPEG-2 than the screen refresh techniques for an OLED display device.

Recognizing these deficiencies of human perception, the present invention discloses architecture for delivering media objects in an encoding format optimized for display device used to render such media object. For an illustrative embodiment of the present invention by referring to FIG. 1, video display device 120a represents a CRT based video display device and video display device 120b is an OLED display device. Both display devices are connected to media server 170 through a connection means 180.

In step 510, display device 120a requests a media object from media server 170. For example, the request for a media object is for a movie that is delivered through a video on demand system or a media object delivered as streaming media through the Internet. Media server 170 receives this request, in step 520, and determines the capabilities of display device 120a. In the preferred embodiment of the invention, display device 120a transmits identification parameters as part of device parameters that identify the display device technology used for that device when rendering a media service. For example, the display device 120a transmits metadata identifying the display device as a CRT based television. Table II presents an exemplary embodiment of a metadata field DISPLAYDEVICE and corresponding values that may be used to identify a display device technology using an Extensible Markup Language format. For example, metadata received as <DISPLAYDEVICE> CRT </DISPLAYDEVICE> represents a CRT based display device technology. Other metadata formats may be used, in accordance with the principles of the present invention.

DISPLAY TECHNOLOGY	VALUE
Cathode Ray Tube	CRT
Organic Light Emitting Diode	OLE
Liquid Crystal Display	LCD
Liquid Crystal on Silicon	LCO
Digital Light Projector	DLP
Plasma	PLA

TABLE 2

Alternatively, based on the request by display device 120a for a media object, the IP and/or port address of display device 120a is transmitted as part of the request. Media server 170 preferably has a database that contains information that identifies the technology used for identifying the display device by the IP address and/or port address information that is part of the request. This information could be entered in by a user and stored by media server 170 when registering the display device through a network connection.

Step 530 presents an optional step where display device 120a communicates identification parameters to media server 170. This communication is typically in response to a query made by media server 170 requesting the display technology used for the display device. Preferably, this communication of identification parameters is similar to the metadata presented in TABLE 2, although other formats of identification parameters may be used.

In response to the identification parameters received by media server 170, in step 540 the media server communicates a media object to video display 120a that corresponds to the display technology used for the display device. In the preferred embodiment, media server 170 utilizes a lookup table or database entry that designates a display technology to an encoding technique that has been predefined as producing an optimal video image for the display device technology. For example, for a CRT it may be determined that MPEG-2 encoded media object produces an optimal video presentation compared to an OLED display where a Windows Media 9 encoded media object may produce the optimal video presentation. Any encoding format may be selected, in accordance with the determinations made by the operator of media server 170. These determinations may change as new encoding techniques are created as with further improvements in display device technologies.

In the preferred embodiment, media server 170 stores multiple versions of the same source material as media objects encoded in different formats. In the present example, media server 170 would store the source material of a movie as a media object encoded in MPEG-2 format and a media object encoded in Windows Media 9 format. Alternatively, media server 170 would encode the source material of a media object into the appropriate format in real time or in close to real time using an encoder, in accordance with the designated encoding format for a display technology as described above.

Media server 170 then transmits the MPEG-2 encoded media object to display device 120a that is designated as a CRT, for this example. The media object is transmitted through connection means 180 and LAN 130 to display device 120a. If

display device 120b requests the same movie, media server 170 would transmit the Windows Media 9 encoded media object to the OLED based display device, as specified above. Other encoding formats and display devices are to be considered in accordance with the principles of the present invention.

In addition, for each format of a media object, visual attributes of the source material used to generate a media object are to be modified as to produce an optimal video picture for a specific display technology. Visual attributes to be modified include color, tint, contrast, hue, saturation, brightness, frame rate, lines per field, pixels, and the like. The visual attributes are selected and modified in accordance with experimentally determined parameters for providing the optimal viewing video on a display device for a particular technology.

In step 550, the display device receiving the media object renders the object as video. In the present example, each display device has a decoder capable of decoding a received media service. Hence, display device 120a has an MPEG-2 video decoder and display device 120b has a Windows Media 9 video decoder. The decoder or decoders for a display device are to be selected in accordance with the format of the media objects to be decoded by the display device.

In an alternative embodiment of the present invention, sub-channels or "minor" channels of a multi-casted digital broadcast may be used to transmit multiple versions of a media object as used for an ATSC or DVB based television system. Specifically, a sub-channel for a digital broadcast system may be designated to carry programs for a display device of a first technology and utilize a second sub-channel to carry programs for a display device of a second technology, where the media object is generated from the same source material. For example, a program transmitted on a first sub-channel may have the gamma values of the color of the programming be modified for display on a plasma device compared to a program carried on a second sub-channel where the programming would be color corrected for display on a LCD screen. Other attributes of programming may be modified in accordance with the principles of the present invention.

It is to be understood that the present invention may be implemented in various forms of hardware, software, firmware, special purpose processors, or a combination thereof. In one embodiment, the present invention may be implemented in software as an application program tangibly embodied on a program storage device. The application program may be uploaded to, and executed by, a machine comprising any suitable architecture.

It is to be further understood that, because some of the constituent system components and method steps depicted in the accompanying figures may be

implemented in software, the actual connections between the system components (or the process steps) may differ depending on the manner in which the present invention is programmed. Given the teachings of the present invention provided herein, one of ordinary skill in the art will be able to contemplate these and similar implementations or configurations of the present invention.

CLAIMS

What is claimed is:

1. A method for communicating with an electronic apparatus via a network, the method comprising:

receiving a communication (420) comprising identification parameters associated with a computer, wherein the communication is compatible with a communication protocol of a first electronic apparatus;

transmitting a request (440) to establish communication with the computer associated with the received identification parameters, wherein the request is transmitted via a network;

receiving a response to the request, wherein the response attempts to establish communication between the computer and the first electronic apparatus, wherein the response is transmitted via the network; and

validating the response (450) to the request to ensure that the computer to which the request to establish communication was transmitted is the computer associated with the received identification parameters.

2. The method of claim 1, wherein the request to establish communication between the computer and the first electronic apparatus is transmitted from the first electronic apparatus with which the communication is desired.

3. The method of claim 1, wherein the first electronic apparatus uses a factory defined communication protocol.

4. The method of claim 1, wherein the identification parameters associated with the computer comprise an IP address and port of the computer.

5. The method of claim 1, further comprising:

storing the identification parameters (430) associated with the computer in a memory of the first electronic apparatus.

6. The method of claim 1, further comprising:

receiving a command from the computer (460), wherein the command is associated with performing a desired function on the first electronic apparatus.

7. The method of claim 6, wherein the desired function is associated with one of servicing, testing and controlling the first electronic apparatus.

8. The method of claim 1, wherein the network is an Ethernet network.

9. The method of claim 1, further comprising:

receiving a communication comprising identification parameters associated with the computer, wherein the communication is compatible with a communication protocol of a second electronic apparatus;

transmitting a request to establish communication with the computer associated with the received identification parameters, wherein the request is transmitted via the network;

receiving a response to the request, wherein the response attempts to establish communication between the computer and the second electronic apparatus, wherein the response is transmitted via the network; and

validating the response to the request to ensure that the computer to which the request to establish communication was transmitted is the computer associated with the received identification parameters.

10. The method of claim 9, further comprising:

receiving a command from the computer, wherein the command is associated with performing a desired function on the second electronic apparatus.

11. A method for communicating with an electronic apparatus via a network, the method comprising:

transmitting a communication (410) comprising identification parameters associated with a computer to a first electronic apparatus, wherein the communication is compatible with a communication protocol of the first electronic apparatus;

receiving a request to establish communication with the first electronic apparatus, wherein the request is transmitted via a network; and

transmitting a response to the request, wherein the response attempts to establish communication between the computer and the first electronic apparatus, wherein the response is transmitted via the network.

12. The method of claim 11, wherein the communication comprising identification parameters associated with the computer uses a proprietary protocol used by the first electronic apparatus.

13. The method of claim 11, wherein the identification parameters comprise an IP address and port of the computer.

14. The method of claim 11, further comprising:

transmitting a command to the first electronic apparatus, wherein the command is associated with performing a desired function on the first electronic apparatus.

15. The method of claim 14, wherein the desired function is associated with one of servicing, testing and controlling the first electronic apparatus.

16. The method of claim 11, wherein the network is an Ethernet network.

17. The method of claim 11, further comprising:

transmitting a communication comprising identification parameters associated with the computer to a second electronic apparatus, wherein the communication is compatible with a communication protocol of the second electronic apparatus;

receiving a request to establish communication with the second electronic apparatus, wherein the request is transmitted via the network; and

transmitting a response to the request, wherein the response attempts to establish communication between the computer and the second electronic apparatus, wherein the response is transmitted via the network.

18. The method of claim 17, further comprising:

transmitting a command to the second electronic apparatus, wherein the command is associated with performing a desired function on the second electronic apparatus.

19. A system (100) for communicating with an electronic apparatus via a network, the system comprising:

a first device (140) for transmitting a communication comprising identification parameters associated with a second device (110), wherein the communication is compatible with a communication protocol of a first electronic apparatus (120a, b ... k);

a first electronic apparatus for communicating with the second device, wherein first electronic apparatus comprises a first interface for wirelessly communicating with the first device and a second interface for communicating with the second device via a network (130); and

a second device for communicating with the first electronic apparatus, wherein the second device communicates with the first electronic apparatus via the network.

20. The system of claim 19, wherein the first device is an infrared transmitter.

21. The system of claim 19, wherein the identification parameters transmitted by the first device comprise an internet protocol (IP) address and port associated with the second device.

22. The system of claim 19, wherein the second device is a computer.

23. The system of claim 19, wherein the first electronic apparatus is a video display device.

24. The system of claim 19, wherein the network is an Ethernet network.

25. The system of claim 19, wherein the first interface of the first electronic apparatus decodes an infrared signal.

26. The system of claim 19, wherein the first electronic apparatus further comprises:

a memory for storing the identification parameters associated with the second device.

27. The system of claim 19, wherein the second interface is an Ethernet connector.

28. The system of claim 19, wherein the first electronic apparatus executes commands transmitted by the second device that are associated with performing a desired function on the first electronic apparatus.

29. The system of claim 19, wherein the first and second devices use a proprietary protocol compatible with the first electronic apparatus.

30. The system of claim 19, further comprising:

a second electronic apparatus for communicating with the second device via the network after the first electronic apparatus has established communication with the second device.

31. The system of claim 30, wherein the second electronic apparatus is a video display device.

32. A computer program product comprising a computer useable medium having computer program logic recorded thereon for communicating with an electronic apparatus via a network, the computer program logic comprising:

program code for receiving a communication comprising identification parameters associated with a computer, wherein the communication is compatible with a communication protocol of an electronic apparatus;

program code for transmitting a request to establish communication with the computer associated with the received identification parameters, wherein the request is transmitted via a network;

program code for receiving a response to the request, wherein the response attempts to establish communication between the computer and the electronic apparatus, wherein the response is transmitted via the network; and

program code for validating the response to the request to ensure that the computer to which the request to establish communication was transmitted is the computer associated with the received identification parameters.

33. A computer program product comprising a computer useable medium having computer program logic recorded thereon for communicating with an electronic apparatus via a network, the computer program logic comprising:

program code for transmitting a communication comprising identification parameters associated with a computer to an electronic apparatus, wherein the communication is compatible with a communication protocol of the electronic apparatus;

program code for receiving a request to establish communication with the electronic apparatus, wherein the request is transmitted via a network; and

program code for transmitting a response to the request, wherein the response attempts to establish communication between the computer and the electronic apparatus, wherein the response is transmitted via the network.

34. A system (100) for communicating with a video display device via an Ethernet network, the system comprising:

an infrared transmitter (140) for wirelessly transmitting an infrared signal to a video display device (120a, b ... k) via a communication protocol used by the video

display device, wherein the infrared signal comprises an internet protocol (IP) address and port associated with a computer (110);

a video display device for receiving the infrared signal and for communicating with the computer via an Ethernet network (130), wherein the video display device comprises an infrared receiver for receiving the infrared signal and an Ethernet connector for connecting to the Ethernet network; and

a computer for performing a desired function on the video display device, wherein the computer comprises an Ethernet connector for connecting to the Ethernet network and an input means for inputting the desired function to be performed on the video display device.

35. A method for receiving a media object corresponding to a display technology used for a display device comprising the steps of:

determining a device display parameter (120a, b ...k) related to the display technology used for the display device;

communicating said parameter (130); and

receiving the media object (120a, b ...k), wherein the media object corresponds to the display technology used for the display device.

36. The method of claim 35, wherein said parameter indicates the display technology used is at least one of: a cathode ray tube, organic light emitting diode, liquid crystal display, liquid crystal on silicon, digital light project, and plasma.

37. The method of claim 36, wherein said media object is encoded in a format optimized for a display technology.

38. The method of claim 37, wherein the media object has a visual attribute modified for said display technology, wherein said visual attribute is changed when said media object is to be displayed on a display device using a different display technology.

39. The method of claim 38, wherein said media object is transmitted on a sub-channel of a digital television broadcast system and the changed media object is transmitted on a different sub-channel.

40. A method for transmitting a media object corresponding to a display technology used for a display device comprising the steps of:

determining a device display parameter related to the display technology used for the display device (120a, b ...k), wherein the parameter is received (170) as part of a request for the media object from the display device (120a, b ...k) ; and

transmitting the media object to the display device (170), wherein the media object corresponds to the display technology used for the display device (120a, b ...k).

41. The method of claim 40, wherein said parameter indicates the display technology used is at least one of: a cathode ray tube, organic light emitting diode, liquid crystal display, liquid crystal on silicon, digital light project, and plasma.

42. The method of claim 41, wherein said media object is encoded in a format optimized for a display technology.

43. The method of claim 42, wherein the media object has a visual attribute modified for said display technology, wherein said visual attribute is changed when said media object is to be displayed on a display device using a different display technology.

44. The method of claim 43, wherein said media object is transmitted on a sub-channel of a digital television broadcast system and said changed media object is transmitted on a different sub-channel.

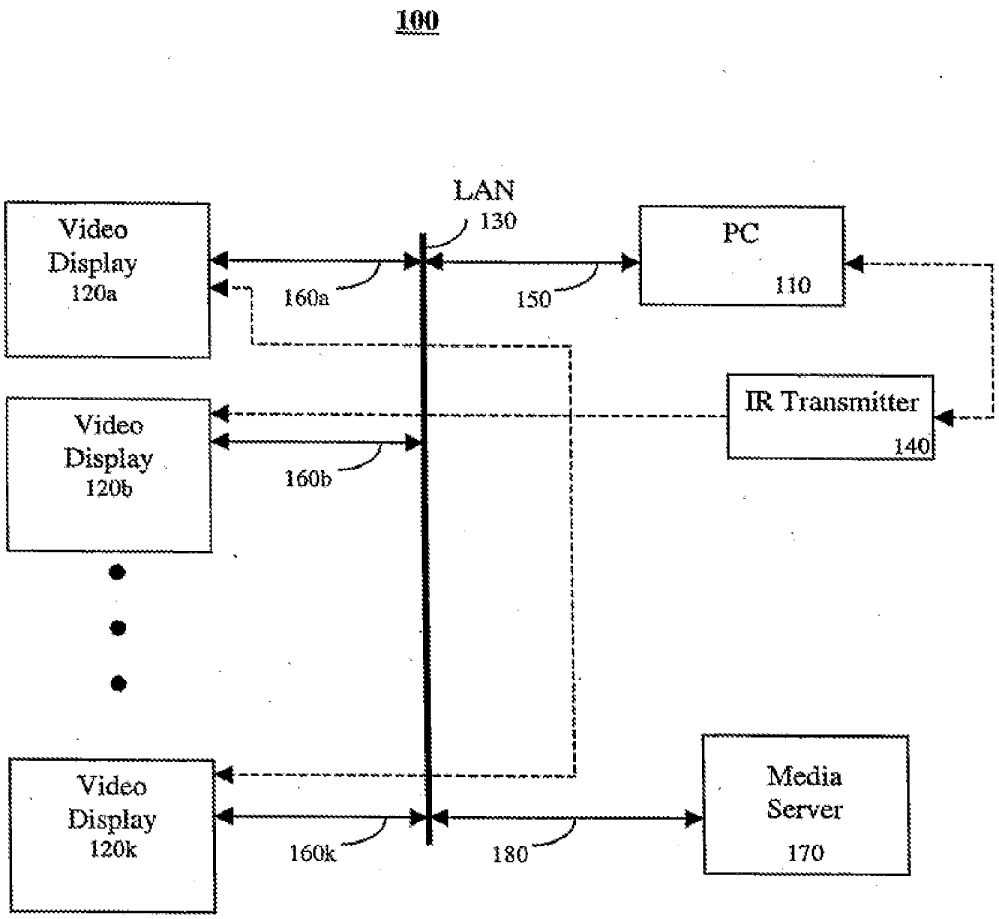
100
LAN
130
Video
Display
120a
160a
150
PC
110
Video
Display
120b
160b
IR Transmitter
140
Video
Display
120k
160k
180
Media
Server
170

FIG. 1

200

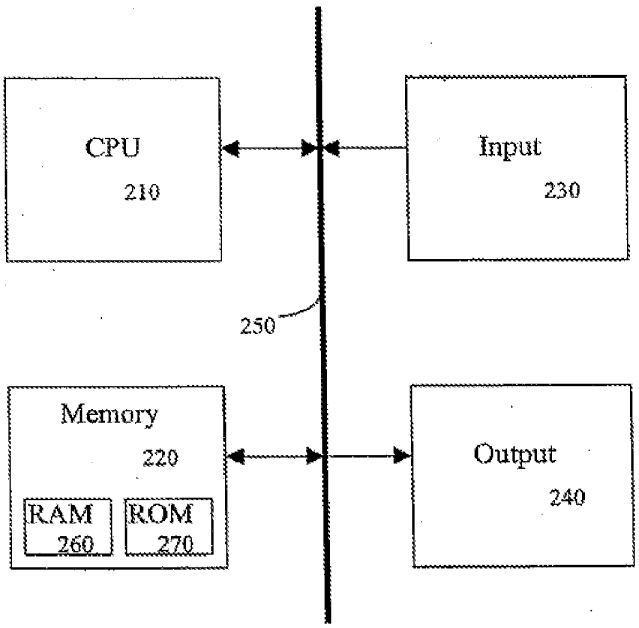

FIG. 2

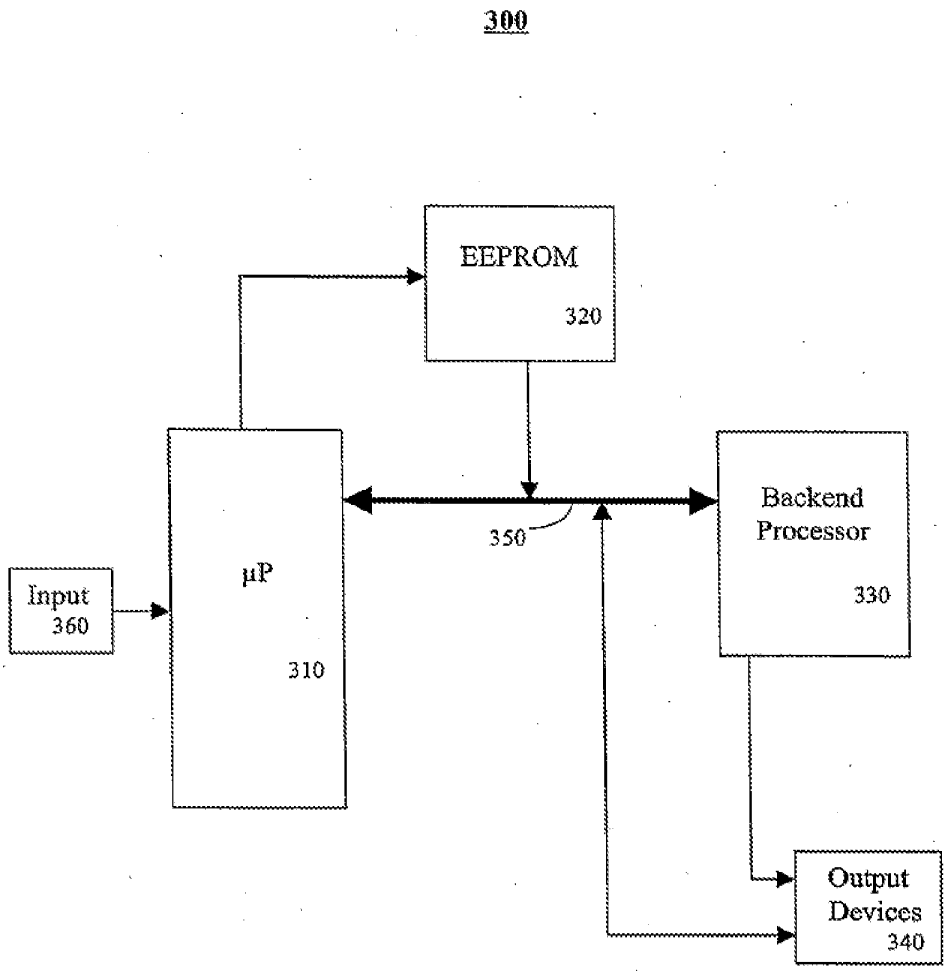
300
EEPROM
320
Backend
Processor
330
350
µP
310
Input
360
Output
Devices
340

FIG. 3

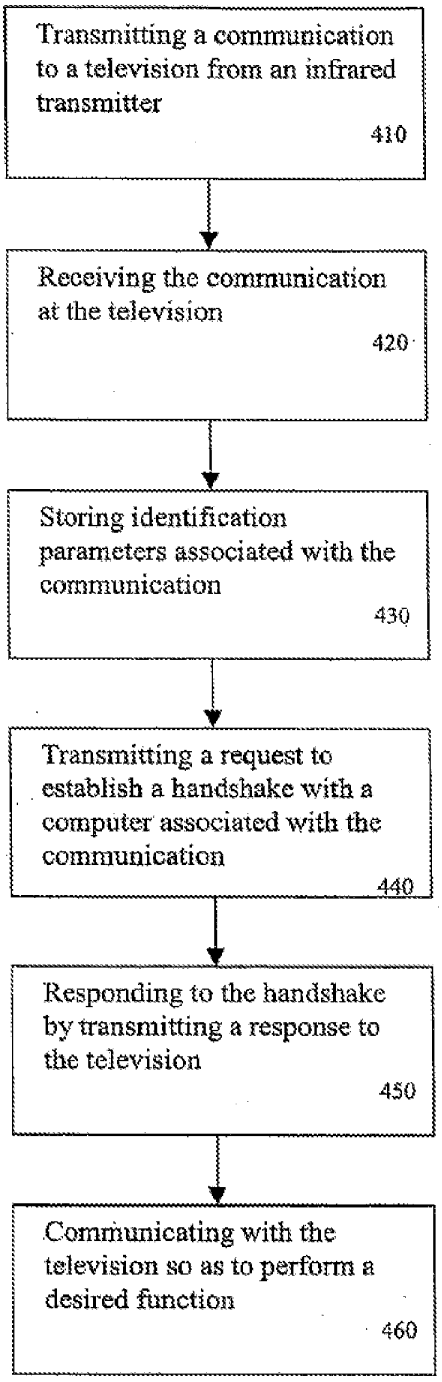
Transmitting a communication to a television from an infrared transmitter
410
Receiving the communication at the television
420
Storing identification parameters associated with the communication
430
Transmitting a request to establish a handshake with a computer associated with the communication
440
Responding to the handshake by transmitting a response to the television
450
Communicating with the television so as to perform a desired function
460

FIG. 4

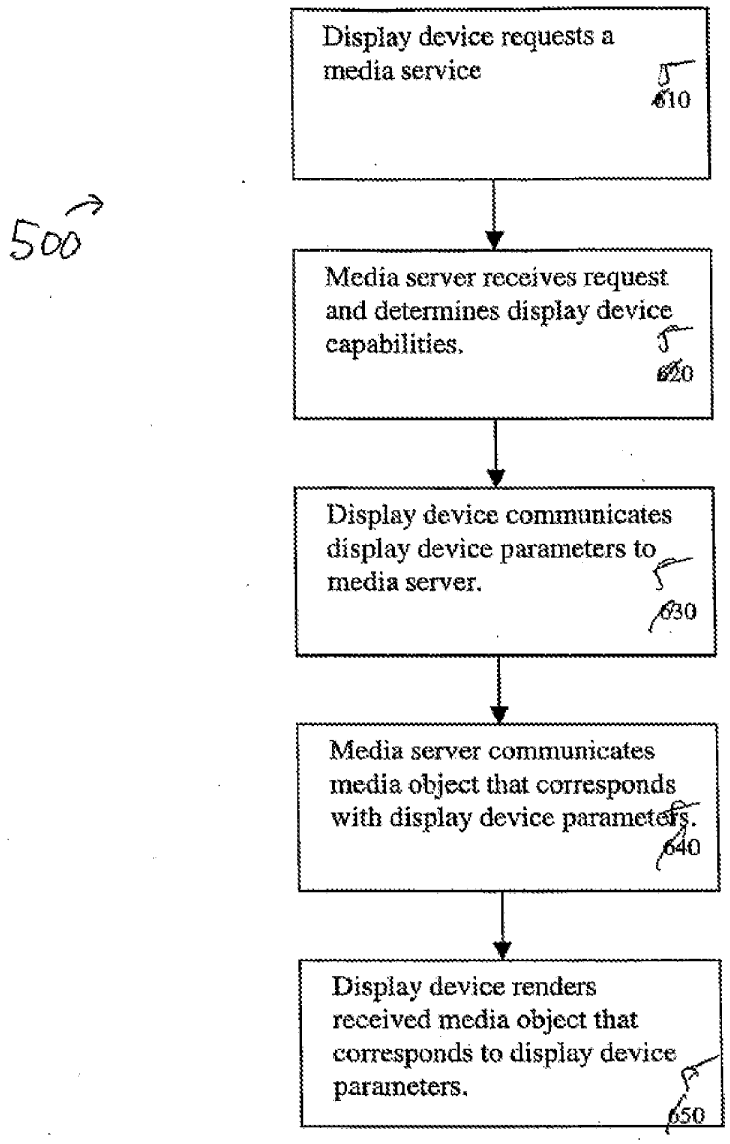
500
Display device requests a media service
610
Media server receives request and determines display device capabilities.
620
Display device communicates display device parameters to media server.
630
Media server communicates media object that corresponds with display device parameters.
640
Display device renders received media object that corresponds to display device parameters.
650

FIG. 5

(12) INTERNATIONAL APPLICATION PUBLISHED UNDER THE PATENT COOPERATION TREATY (PCT)

(19) World Intellectual Property Organization
International Bureau

(43) International Publication Date
18 November 2004 (18.11.2004)

PCT

(10) International Publication Number
WO 2004/100500 A3

(51) International Patent Classification[7]: H04L 12/28, H04B 1/20, H04L 29/06

(21) International Application Number: PCT/US2004/013859

(22) International Filing Date: 4 May 2004 (04.05.2004)

(25) Filing Language: English

(26) Publication Language: English

(30) Priority Data:
60/467,928 5 May 2003 (05.05.2003) US

(71) Applicant (*for all designated States except US*): THOMSON LICENSING S.A. [FR/FR]; 46, Quai A. Le Gallo, F-92648 Boulogne (FR).

(72) Inventors; and
(75) Inventors/Applicants (*for US only*): GRIMES, Kevin, Lloyd [US/US]; 12427 Haydon Court, Fishers, IN 46038 (US). BURNETT, Angela, Renee [US/US]; 6821 Bretton Wood Drive, Indianapolis, IN 46268 (US).

(74) Agents: TRIPOLI, Joseph, S. et al.; c/o Thomson Licensing Inc., 2 Independence Way, Suite 200, Princeton, NJ 08540 (US).

(81) Designated States (*unless otherwise indicated, for every kind of national protection available*): AE, AG, AL, AM, AT, AU, AZ, BA, BB, BG, BR, BW, BY, BZ, CA, CH, CN, CO, CR, CU, CZ, DE, DK, DM, DZ, EC, EE, EG, ES, FI, GB, GD, GE, GH, GM, HR, HU, ID, IL, IN, IS, JP, KE, KG, KP, KR, KZ, LC, LK, LR, LS, LT, LU, LV, MA, MD, MG, MK, MN, MW, MX, MZ, NA, NI, NO, NZ, OM, PG, PH, PL, PT, RO, RU, SC, SD, SE, SG, SK, SL, SY, TJ, TM, TN, TR, TT, TZ, UA, UG, US, UZ, VC, VN, YU, ZA, ZM, ZW.

(84) Designated States (*unless otherwise indicated, for every kind of regional protection available*): ARIPO (BW, GH, GM, KE, LS, MW, MZ, NA, SD, SL, SZ, TZ, UG, ZM, ZW), Eurasian (AM, AZ, BY, KG, KZ, MD, RU, TJ, TM), European (AT, BE, BG, CH, CY, CZ, DE, DK, EE, ES, FI, FR, GB, GR, HU, IE, IT, LU, MC, NL, PL, PT, RO, SE, SI, SK, TR), OAPI (BF, BJ, CF, CG, CI, CM, GA, GN, GQ, GW, ML, MR, NE, SN, TD, TG).

[Continued on next page]

(54) Title: SYSTEM AND METHOD FOR COMMUNICATING WITH A DISPLAY DEVICE VIA A NETWORK

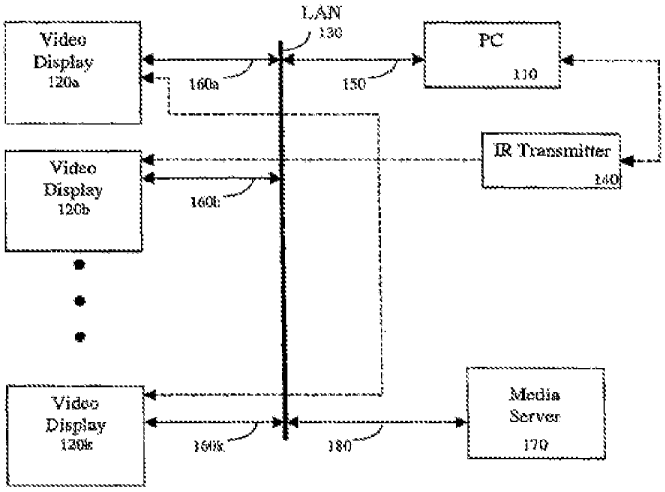

(57) Abstract: A system (100) and corresponding methods are provided for enabling communication with an electronic apparatus via a network. The system comprises: a first device (140) for transmitting a communication comprising identification parameters associated with a second device (110), wherein the communication is compatible with a communication protocol of a first electronic apparatus (120a, b ...k); a first electronic apparatus for communicating with the second device, wherein first electronic apparatus comprises a first interface for wirelessly communicating with the first device and a second interface for communicating with the second device via a network (130); and a second device for communicating with the first electronic apparatus, with the second device communicating the first electronic apparatus via the network.

WO 2004/100500 A3

Published:

— *with international search report*

— *before the expiration of the time limit for amending the claims and to be republished in the event of receipt of amendments*

(88) Date of publication of the international search report:
28 April 2005

For two-letter codes and other abbreviations, refer to the "Guidance Notes on Codes and Abbreviations" appearing at the beginning of each regular issue of the PCT Gazette.

INTERNATIONAL SEARCH REPORT

Inte onal Application No
PCT/US2004/013859

A. CLASSIFICATION OF SUBJECT MATTER
IPC 7 H04L12/28 H04B1/20 H04L29/06

According to International Patent Classification (IPC) or to both national classification and IPC

B. FIELDS SEARCHED

Minimum documentation searched (classification system followed by classification symbols)
IPC 7 H04L H04B

Documentation searched other than minimum documentation to the extent that such documents are included in the fields searched

Electronic data base consulted during the international search (name of data base and, where practical, search terms used)

EPO-Internal

C. DOCUMENTS CONSIDERED TO BE RELEVANT

Category *	Citation of document, with indication, where appropriate, of the relevant passages	Relevant to claim No.
A	WO 97/18636 A (MIZUNO YOSHIRO ; WEBTRONICS INC (US)) 22 May 1997 (1997-05-22) the whole document	1-34
X	US 2003/043740 A1 (MARCH SEAN W ET AL) 6 March 2003 (2003-03-06)	1-18,32, 33
A	abstract; figures 3,8 paragraphs '0005!, '0006!, '0022!, '0028!, '0036! - '0091!, '0104!, '0106!	19-31,34
X	WO 97/40610 A (NORTHERN TELECOM LTD) 30 October 1997 (1997-10-30)	1-18,32, 33
A	page 5, line 18 - page 6, line 12	19-31,34

-/--

[X] Further documents are listed in the continuation of box C.

[X] Patent family members are listed in annex.

* Special categories of cited documents :

"A" document defining the general state of the art which is not considered to be of particular relevance

"E" earlier document but published on or after the international filing date

"L" document which may throw doubts on priority claim(s) or which is cited to establish the publication date of another citation or other special reason (as specified)

"O" document referring to an oral disclosure, use, exhibition or other means

"P" document published prior to the international filing date but later than the priority date claimed

"T" later document published after the international filing date or priority date and not in conflict with the application but cited to understand the principle or theory underlying the invention

"X" document of particular relevance; the claimed invention cannot be considered novel or cannot be considered to involve an inventive step when the document is taken alone

"Y" document of particular relevance; the claimed invention cannot be considered to involve an inventive step when the document is combined with one or more other such documents, such combination being obvious to a person skilled in the art.

"&" document member of the same patent family

Date of the actual completion of the international search	Date of mailing of the international search report
2 February 2005	21 02 2005

Name and mailing address of the ISA	Authorized officer
European Patent Office, P.B. 5818 Patentlaan 2 NL - 2280 HV Rijswijk Tel. (+31-70) 340-2040, Tx. 31 651 epo nl, Fax: (+31-70) 340-3016	Lievens, K

Form PCT/ISA/210 (second sheet) (January 2004)

INTERNATIONAL SEARCH REPORT

Inte onal Application No
PCT/US2004/013859

C.(Continuation) DOCUMENTS CONSIDERED TO BE RELEVANT

Category °	Citation of document, with indication, where appropriate, of the relevant passages	Relevant to claim No.
X	US 5 109 222 A (WELTY JOHN) 28 April 1992 (1992-04-28)	19-31
A	abstract; figure 5 column 2, line 30 - column 4, line 55	1-18, 32-34
A	WO 00/39772 A (KONINKL PHILIPS ELECTRONICS NV) 6 July 2000 (2000-07-06) the whole document	1-34
A	WO 00/16531 A (SONY ELECTRONICS INC) 23 March 2000 (2000-03-23) the whole document	1-34
X	US 2003/046691 A1 (NAKAGAWA TOSHIYUKI) 6 March 2003 (2003-03-06) abstract paragraph '0002! - paragraph '0023! paragraph '0045! - paragraph '0048!	35-38, 40-43
Y	paragraph '0080! - paragraph '0123!	39,44
X	WO 02/097584 A2 (HYPERSPACE COMMUNICATIONS, INC) 5 December 2002 (2002-12-05) abstract paragraph '0017! - paragraph '0023! paragraph '0026! - paragraph '0036! paragraph '0043! - paragraph '0046!	35-38, 40-43
X	EP 1 263 233 A (MATSUSHITA ELECTRIC INDUSTRIAL CO., LTD) 4 December 2002 (2002-12-04) abstract paragraph '0003! - paragraph '0011! paragraph '0041!	35-38, 40-43
Y	US 2002/120931 A1 (HUBER THOMAS ET AL) 29 August 2002 (2002-08-29) abstract paragraph '0006! - paragraph '0020! paragraph '0035! - paragraph '0047! paragraph '0054! figures 1,5	39,44

Form PCT/ISA/210 (continuation of second sheet) (January 2004)

INTERNATIONAL SEARCH REPORT

International application No.
PCT/US2004/013859

Box II Observations where certain claims were found unsearchable (Continuation of item 2 of first sheet)

This International Search Report has not been established in respect of certain claims under Article 17(2)(a) for the following reasons:

1. [ ] Claims Nos.:
because they relate to subject matter not required to be searched by this Authority, namely:

2. [ ] Claims Nos.:
because they relate to parts of the International Application that do not comply with the prescribed requirements to such an extent that no meaningful International Search can be carried out, specifically:

3. [ ] Claims Nos.:
because they are dependent claims and are not drafted in accordance with the second and third sentences of Rule 6.4(a).

Box III Observations where unity of invention is lacking (Continuation of item 3 of first sheet)

This International Searching Authority found multiple inventions in this international application, as follows:

see additional sheet

1. [X] As all required additional search fees were timely paid by the applicant, this International Search Report covers all searchable claims.

2. [ ] As all searchable claims could be searched without effort justifying an additional fee, this Authority did not invite payment of any additional fee.

3. [ ] As only some of the required additional search fees were timely paid by the applicant, this International Search Report covers only those claims for which fees were paid, specifically claims Nos.:

4. [ ] No required additional search fees were timely paid by the applicant. Consequently, this International Search Report is restricted to the invention first mentioned in the claims; it is covered by claims Nos.:

Remark on Protest

[ ] The additional search fees were accompanied by the applicant's protest.

[ ] No protest accompanied the payment of additional search fees.

FURTHER INFORMATION CONTINUED FROM PCT/ISA/ 210

This International Searching Authority found multiple (groups of) inventions in this international application, as follows:

1. claims: 1-34

   Method and system for establish a communication

2. claims: 35-44

   Method for transmision of media objects based on the properties of a display device

INTERNATIONAL SEARCH REPORT

Information on patent family members

Inte onal Application No
PCT/US2004/013859

Patent document cited in search report		Publication date	Patent family member(s)			Publication date
WO 9718636	A	22-05-1997	AU	7706596	A	05-06-1997
			WO	9718636	A2	22-05-1997
US 2003043740	A1	06-03-2003	EP	1430682	A2	23-06-2004
			WO	02103982	A2	27-12-2002
WO 9740610	A	30-10-1997	AU	707905	B2	22-07-1999
			AU	2563297	A	12-11-1997
			CA	2248577	A1	30-10-1997
			WO	9740610	A2	30-10-1997
			CN	1216657	A	12-05-1999
			DE	69708281	D1	20-12-2001
			DE	69708281	T2	16-05-2002
			EP	0895684	A2	10-02-1999
			JP	11508753	T	27-07-1999
			KR	2000010612	A	25-02-2000
			US	6128298	A	03-10-2000
US 5109222	A	28-04-1992	NONE			
WO 0039772	A	06-07-2000	CN	1298530	T	06-06-2001
			WO	0039772	A1	06-07-2000
			EP	1058921	A1	13-12-2000
			JP	2002534038	T	08-10-2002
WO 0016531	A	23-03-2000	US	6237049	B1	22-05-2001
			AT	280463	T	15-11-2004
			AU	5579999	A	03-04-2000
			CA	2340902	A1	23-03-2000
			DE	69921342	D1	25-11-2004
			EP	1112650	A1	04-07-2001
			JP	2002525732	T	13-08-2002
			WO	0016531	A1	23-03-2000
US 2003046691	A1	06-03-2003	JP	2003153254	A	23-05-2003
WO 02097584	A2	05-12-2002	NONE			
EP 1263233	A	04-12-2002	CN	1389785	A	08-01-2003
			EP	1263233	A2	04-12-2002
			JP	2003091648	A	28-03-2003
			US	2002184223	A1	05-12-2002
US 2002120931	A1	29-08-2002	CA	2438620	A1	29-08-2002
			EP	1364533	A1	26-11-2003
			WO	02067587	A1	29-08-2002

NOTICE OF REASONS FOR REJECTION

Patent Application No.: 2014-506460
Drafting Date: June 28, 2016
Mailing Date: July 5, 2016
Examiner: Tatsuo UMEMOTO
Representative: Yusuke HIRAKI & Anor.
Sections Applied: 29(2), 36, 37

This application is rejected for the reason(s) set forth below. A written argument can be submitted in response to this notice within three months from the mailing date.

REASONS

1. (Unity of Invention) The present application does not comply with the requirements of Section 37 of the Patent Law as the claims are deficient in respect of the points mentioned below.
2. (Clarity) The present application does not comply with the requirements of Section 36(6)(ii) of the Patent Law as the claims are deficient in respect of the points mentioned below.
3. (Inventive steps) The invention according to the claim(s) of the present application indicated below is unpatentable under Section 29(2) of the Patent Law because it could readily have been made by a person skilled in the art prior to the filing of the application on the basis of the inventions disclosed in the herein-cited publication(s) distributed in Japan or abroad prior to the filing of the application.

Note (refer to THE LIST OF CITED REFERENCE about cited references)

●Regarding Reason 1 (Unity of Invention)

1. Determination for examination target according to special technical features

The invention according to claim 1 includes a special technical feature as :

"receiving, in a server system, one or more signals from a remote personal computing device, the one or more signals specifying a video file to be acted upon and identifying a media player for playing the video content, the one or more signals further including a universal playback control command for controlling playing of the

video content on the display device by the media player,

converting, by the server system, the universal playback control command into corresponding programming code to control playing of the video content on the display device by the media player, wherein converting the universal playback control command includes selecting from among a plurality of specific commands, each of which represents a corresponding playback control command for a respective media player;".

Therefore, the examination targets will be claim 1 and claims 2-10, 11-21, 27-38, and 67 including same or corresponding technical features as in claim 1.

2. Determination for examination target according to efficiency of examination

The inventions according to claims 22-26, 39-66, and 68-70 are not inventions including all subject matters of claim 1 in the same category as that of claim 1. In addition, it is not possible to examine claims 22-26, 39-66, and 68-70 without substantially searching or inspecting prior arts on the basis of the examination targets determined by the special technical feature. There is no other circumstance to facilitate examination for those claims along with the examination target.

Therefore, the inventions according to claims 22-26, 39-66, and 68-70 will not be examined other than unity of invention.

●Regarding Reason 2 (Clarity)

(1) Claims 5, 14, 15, 16

Claim 5 describes "the universal command . . . the video content . . .". However, "universal command" is not found before this description. Therefore, it is unclear what is meant by "the universal command".

It also applies to claims 14, 15, and 16 including similar descriptions.

Therefore, claims 5, 14, 15, and 16 are unclear.

(2) Claims 14, 15

Claim 14 describes "the look-up table stores . . . the universal command and a plurality of . . .". However, "look-up table" is not found before this description. Therefore, it is unclear what is meant by "the look-up table". (this may be a typographic error of the number of claim on which claim 14 depends ?)

It also applies to claim 15 depending on claim 14.

Therefore, claims 14 and 15 are unclear.

●Regarding Reason 3 (Inventive Steps)

•Claims 1, 11, 27, 31, 33, 67
•Cited References : 1, 2
•Remarks :

The cited reference 1 describes that "video display device" (paragraph 0012, corresponding to P. 4 L. 17 – P. 5 L. 2 of WO2004100500) are "capable of decoding received media objects using a media player application such as REALPLAYER or WINDOWS MEDIA PLAYER". Then it is understood that the cited reference 1 describes "A machine-implemented method of controlling presentation of video content on a display device by a media player", as in claim 1 of the present application.

Paragraph 0012 of the cited reference 1 also describes that "universal remote control" is used ; it is understood from paragraph 0028 (P. 8 L. 36 – P. 9 L. 5 of WO2004100500) and the like that "PC 110" may instruct to playback media objects ; it is obvious from TABLE 1, paragraph 0041 (P. 12 L. 12 – P. 12 L. 17 of WO2004100500), and the like that a media player is identified when performing the instruction. Therefore, when instructing playback, a media object is specified and a media player is identified in the cited reference 1.

On the other hand, the cited reference 1 does not describe that "universal playback control command" for controlling playback is converted into playback control command corresponding to a media player, thus different from the present invention.

However, it is a commonly known technique that a remote control command is converted into a playback-side command, as described in the cited reference 2 (paragraphs 0079-0080). Those skilled in the art could readily apply the commonly known technique into the cited reference 1 in which playback is assumed by various types of media players.

It also applies to claims 11, 27, 31, 33, and 67.

Therefore, those skilled in the art could readily achieve the inventions according to claims 1, 11, 27, 31, 33, and 67 on the basis of the cited references 1 and 2. Thus those claims cannot be patented under JP Patent Law Article 29 (2).

•Claims 2, 12
•Cited References : 1, 2

•Remarks :

The cited reference 1 uses various types of media players. When using media players, it is readily anticipated that IDs of the media players are inspected, and that necessary protocols or APIs are loaded. Javascript code is also commonly known as commands.

Therefore, those skilled in the art could readily achieve the inventions according to claims 2 and 12 on the basis of the cited references 1 and 2. Thus those claims cannot be patented under JP Patent Law Article 29 (2).

•Claims 3, 4, 13, 14, 15, 29, 30
•Cited References : 1, 2
•Remarks :

The conversion table in the cited reference 2 (paragraph 0080) is a look-up table.

Therefore, those skilled in the art could readily achieve the inventions according to claims 3, 4, 13, 14, 15, 29, and 30 on the basis of the cited references 1 and 2. Thus those claims cannot be patented under JP Patent Law Article 29 (2).

•Claims 5, 16, 32
•Cited References : 1, 2
•Remarks :

The cited reference 1 is concerned with playback control. Playback command, stop command, and suspend command are commonly known as playback control commands.

Therefore, those skilled in the art could readily achieve the inventions according to claims 5, 16, and 32 on the basis of the cited references 1 and 2. Thus those claims cannot be patented under JP Patent Law Article 29 (2).

•Claims 6, 17
•Cited References : 1, 2
•Remarks :

The cited reference 1 (paragraphs 0008-0009, corresponding to the two paragraphs before TABLE 1 in WO2004100500) describes various examples of media objects. Interactive video game is commonly known as media object.

Therefore, those skilled in the art could readily achieve the inventions according to claims 6 and 17 on the basis of the cited references 1 and 2. Thus those claims cannot be patented under JP Patent Law Article 29 (2).

•Claims 7, 18
•Cited References : 1, 2
•Remarks :

The cited reference 1 (paragraph 0008) describes about streaming.

Therefore, those skilled in the art could readily achieve the inventions according to claims 7 and 18 on the basis of the cited references 1 and 2. Thus those claims cannot be patented under JP Patent Law Article 29 (2).

•Claims 8, 19, 34
•Cited References : 1, 2
•Remarks :

The cited reference 1 (paragraph 0028 and the like) describes that video display devices are associated.

Therefore, those skilled in the art could readily achieve the inventions according to claims 8, 19, and 34 on the basis of the cited references 1 and 2. Thus those claims cannot be patented under JP Patent Law Article 29 (2).

•Claims 9, 10, 20, 21, 35, 36, 37
•Cited References : 1, 2
•Remarks :

Identifiers other than IP address or MAC address are commonly known for associating devices.

Therefore, those skilled in the art could readily achieve the inventions according to claims 9, 10, 20, 21, 35, 36, and 37 on the basis of the cited references 1 and 2. Thus those claims cannot be patented under JP Patent Law Article 29 (2).

•Claims 28
•Cited References : 1, 2
•Remarks :

It is a common technique to use a look-up table for association.

Therefore, those skilled in the art could readily achieve the inventions according to claim 28 on the basis of the cited references 1 and 2. Thus those claims cannot be patented under JP Patent Law Article 29 (2).

•Claims 38

•Cited References : 1, 2

•Remarks :

It is a commonly known technique to remotely control over the Internet.

Therefore, those skilled in the art could readily achieve the inventions according to claim 38 on the basis of the cited references 1 and 2. Thus those claims cannot be patented under JP Patent Law Article 29 (2).

<THE LIST OF CITED REFERENCE>

1. JP Patent Publication (Kohyo) 2006-525771 A
2. JP Patent Publication (Kokai) 2004-356695 A (commonly known technique)

拒絶理由通知書

COPY

特許出願の番号	特願２０１４－５０６４６０
起案日	平成２８年　６月２８日
特許庁審査官	梅本　達雄　　９６４８　５Ｃ００
特許出願人代理人	平木　祐輔（外　４名）　様
適用条文	第２９条第２項、第３６条、第３７条

この出願は、次の理由によって拒絶をすべきものです。これについて意見がありましたら、この通知書の発送の日から３か月以内に意見書を提出してください。

理由

１．（発明の単一性）この出願は、下記の点で特許法第３７条に規定する要件を満たしていない。
２．（明確性）この出願は、特許請求の範囲の記載が下記の点で、特許法第３６条第６項第２号に規定する要件を満たしていない。
３．（進歩性）この出願の下記の請求項に係る発明は、その出願前に日本国内又は外国において、頒布された下記の刊行物に記載された発明又は電気通信回線を通じて公衆に利用可能となった発明に基いて、その出願前にその発明の属する技術の分野における通常の知識を有する者が容易に発明をすることができたものであるから、特許法第２９条第２項の規定により特許を受けることができない。

記　　（引用文献等については引用文献等一覧参照）

●理由１（発明の単一性）について

１．特別な技術的特徴に基づく審査対象の決定
請求項１に係る発明に、「サーバシステムにおいて、遠隔の個人コンピュータデバイスから１以上の信号を受信するステップであって、前記１以上の信号は、動作を実施すべきビデオファイルを指定するとともに前記ビデオコンテンツを再生するメディアプレイヤーを識別し、前記１以上の信号はさらに、前記メディアプレイヤーが前記ディスプレイデバイス上で前記ビデオコンテンツを再生する動作を制御するユニバーサル再生制御コマンドを含む、ステップ、前記サーバシステムが、前記ユニバーサル再生制御コマンドを、前記メディアプレイヤーが前記

ディスプレイデバイス上で前記ビデオコンテンツを再生する動作を制御するための対応するプログラムコードへ変換するステップであって、複数の特定コマンドのなかから個々のメディアプレイヤーに対応する再生制御コマンドに相当するものを選択するステップを含む、ステップ」を含むという特別な技術的特徴が発見された。

したがって、請求項１に係る発明と、当該特別な技術的特徴と同一の又は対応する特別な技術的特徴を有する、請求項２－１０、１１－２１、２７－３８、６７に係る発明とを、審査対象とする。

２．審査の効率性に基づく審査対象の決定

請求項２２－２６、３９－６６、６８－７０に係る発明は、請求項１に係る発明の発明特定事項を全て含む同一カテゴリーの発明ではない。そして、請求項２２－２６、３９－６６、６８－７０に係る発明は、審査対象とされた発明を審査した結果、実質的に追加的な先行技術調査や判断を必要とすることなく審査を行うことが可能である発明ではなく、当該発明とまとめて審査を行うことが効率的であるといえる他の事情も無い。

したがって、請求項２２－２６、３９－６６、６８－７０に係る発明は、特許法第３７条以外の要件についての審査対象としない。

●理由２（明確性）について

（１）請求項　５、１４、１５、１６

請求項５には「前記ユニバーサルコマンドは、前記ビデオコンテンツを再生する」との記載があるが、この記載よりも前に「ユニバーサルコマンド」の記載が無く、「前記ユニバーサルコマンド」が何を指し示しているのかが不明確である。

同様の記載のある請求項１４、１５、１６も同様である。

よって、請求項５、１４、１５、１６に係る発明は明確でない。

（２）請求項１４、１５

請求項１４には「前記ルックアップテーブルは、前記ユニバーサルコマンドと、複数の」との記載があるが、この記載よりも前に「ルックアップテーブル」の記載が無く、「前記ルックアップテーブル」が何を指し示しているのかが不明確である。（引用請求項の誤記か？）

また、請求項１４を引用する請求項１５にも同様の点が指摘される。

よって、請求項１４、１５に係る発明は明確でない。

●理由３（進歩性）について

・請求項　　１、１１、２７、３１、３３、６７
・引用文献等　１、２
・備考
引用文献１には、「ビデオ表示装置」（段落［００１２］）が「ＲＥＡＬ　ＰＬＡＹＥＲ又はＷＩＮＤＯＷＳ　ＭＥＤＩＡ　ＰＬＡＹＥＲのようなメディアプレイヤアプリケーションを使用して受信したメディアオブジェクトをデコード可能」とすることが記載されており、引用文献１には本願請求項１に係る発明と同様に、「メディアプレイヤーによるディスプレイデバイス上のビデオコンテンツの提示を制御する、機械実装した方法」が記載されていると認められる。
また、引用文献１の段落［００１２］には「ユニバーサルリモコン」を用いることが記載され、段落［００２８］等から、「ＰＣ１１０」においてもメディアオブジェクトの再生が指示できると認められ、さらに、表１、段落［００４１］等の記載から、その指示の際に、メディアプレイヤを識別するものであることは明らかであるから、再生を指示する際は、メディアオブジェクトを指定するとともに、メディアプレイヤを識別し、再生を指示することを行っていると認められる。
もっとも、引用文献１においては、再生する動作を制御するための「ユニバーサル再生制御コマンド」を、メディアプレイヤに対応する再生制御コマンドに相当するコマンドに変換し、格納することが記載されていない点で相違している。
しかしながら、リモコンのコマンドを再生側に対応するように変換することは例えば引用文献２（段落［００７９］－［００８０］）記載のように周知技術に過ぎず、各種メディアプレイヤでの再生を想定する引用文献１記載のものにおいて、当該周知技術を適用することは当業者が容易に想到し得たことである。
請求項１１、２７、３１、３３、６７についても同様である。
よって、請求項１、１１、２７、３１、３３、６７に係る発明は、引用文献１、２記載のものに基づいて、当業者であれば容易に発明をすることができたものであるから、特許法第２９条第２項の規定により、特許を受けることができない。

・請求項　　２、１２
・引用文献等　１、２
・備考
引用文献１は、各種メディアプレイヤを用いるものであり、その際に、そのＩＤをチェックして必要なプロトコルやＡＰＩを読み出すことは普通に想定されることであり、コマンドとしてJavaScriptコードも周知である。

よって、請求項２、１２に係る発明は、引用文献１、２記載のものに基づいて、当業者であれば容易に発明をすることができたものであるから、特許法第２９条第２項の規定により、特許を受けることができない。

・請求項　　３、４、１３、１４、１５、２９、３０
・引用文献等　１、２
・備考
引用文献２（段落［００８０］）の変換テーブルは、ルックアップテーブルといえる。
よって、請求項３、４、１３、１４、１５、２９、３０に係る発明は、引用文献１、２記載のものに基づいて、当業者であれば容易に発明をすることができたものであるから、特許法第２９条第２項の規定により、特許を受けることができない。

・請求項　　５、１６、３２
・引用文献等　１、２
・備考
引用文献１は、再生制御するものであり、再生制御のコマンドとして再生命令、停止命令、一時停止命令は周知である。
よって、請求項５、１６、３２に係る発明は、引用文献１、２記載のものに基づいて、当業者であれば容易に発明をすることができたものであるから、特許法第２９条第２項の規定により、特許を受けることができない。

・請求項　　６、１７
・引用文献等　１、２
・備考
引用文献１（段落［０００８］－［０００９］）には、メディアオブジェクトについて様々な例が記載されており、メディアオブジェクトとして、インタラクティブビデオゲームは周知である。
よって、請求項６、１７に係る発明は、引用文献１、２記載のものに基づいて、当業者であれば容易に発明をすることができたものであるから、特許法第２９条第２項の規定により、特許を受けることができない。

・請求項　　７、１８
・引用文献等　１、２

・備考

引用文献１（段落［０００８］）には、ストリーミングについて記載されている。

よって、請求項７、１８に係る発明は、引用文献１、２記載のものに基づいて、当業者であれば容易に発明をすることができたものであるから、特許法第２９条第２項の規定により、特許を受けることができない。

・請求項　　８、１９、３４
・引用文献等　１、２
・備考

引用文献１（段落［００２８］等）には、ビデオ表示装置を対応付けることが記載されている。

よって、請求項８、１９、３４に係る発明は、引用文献１、２記載のものに基づいて、当業者であれば容易に発明をすることができたものであるから、特許法第２９条第２項の規定により、特許を受けることができない。

・請求項　　９、１０、２０、２１、３５、３６、３７
・引用文献等　１、２
・備考

機器を対応付けるものとして、ＩＰアドレス及びＭＡＣアドレス以外の識別子も周知である。

よって、請求項９、１０、２０、２１、３５、３６、３７に係る発明は、引用文献１、２記載のものに基づいて、当業者であれば容易に発明をすることができたものであるから、特許法第２９条第２項の規定により、特許を受けることができない。

・請求項　　２８
・引用文献等　１、２
・備考

対応付けの際にルックアップテーブルを設けることは常套手段に過ぎない。

よって、請求項２８に係る発明は、引用文献１、２記載のものに基づいて、当業者であれば容易に発明をすることができたものであるから、特許法第２９条第２項の規定により、特許を受けることができない。

・請求項　　３８

・引用文献等　１、２

・備考

遠隔制御をインターネットを介して行うことは周知慣用の事項に過ぎない。

よって、請求項３８に係る発明は、引用文献１、２記載のものに基づいて、当業者であれば容易に発明をすることができたものであるから、特許法第２９条第２項の規定により、特許を受けることができない。

<引用文献等一覧>

1.特表２００６－５２５７７１号公報

2.特開２００４－３５６６９５号公報（周知技術を示す文献）

－－－－－－－－－－－－－－－－－－－－－－－－－－－－－－－－－－－－－－

<先行技術文献調査結果の記録>

・調査した分野　　ＩＰＣ　Ｈ０４Ｎ　　２１／００　　－　２１／８５８
　　　　　　　　　　　　　Ｇ０６Ｆ　　１３／００

この先行技術文献調査結果の記録は、拒絶理由を構成するものではありません。

<補正をする際の注意>

（１）明細書、特許請求の範囲について補正をする場合は、補正により記載を変更した個所に下線を引いてください（特許法施行規則様式第１３備考６、７）。

（２）補正は、この出願の出願当初の明細書、特許請求の範囲又は図面に記載した事項の範囲内で行わなければなりません。また、意見書で、各補正事項について補正が適法なものである理由を、根拠となる出願当初の明細書等の記載箇所を明確に示したうえで主張してください。

（３）特許請求の範囲について補正をする際には、特許法第１７条の２第４項に違反する補正とならないよう、注意してください。

この拒絶理由通知の内容に関するお問い合わせ又は面接のご希望がありましたら次の連絡先までご連絡ください。

審査第四部　映像システム　梅本　達雄
ＴＥＬ．０３－３５８１－１１０１　内線３５４０
ＦＡＸ．０３－３５０１－０７１５

Espacenet

Bibliographic data: JP2006525771 (A) - 2006-11-09

SYSTEM AND METHOD FOR COMMUNICATING WITH A DISPLAY DEVICE VIA A NETWORK

Inventor(s):

Applicant(s):

Classification:
- **international:** *G06F3/14; H04L12/28; H04L29/06; H04N7/173; G09G3/00*
- **cooperative:** G06F3/14; H04L12/2803; H04L12/282; H04L29/06027; H04L65/1043; H04N21/4122; H04N21/4143; H04N21/42204; H04N21/43615; H04N21/44231; H04N21/485; G09G2320/0693; G09G3/006; H04L2012/2849

Application number: JP20060514279 20040504

Priority number(s): US20030467928P 20030505 ; WO2004US13859 20040504

Also published as: WO2004100500 (A2) WO2004100500 (A3) US2006288373 (A1) KR20060038924 (A) KR101021132 (B1) more

Abstract not available for JP2006525771 (A)
Abstract of corresponding document: WO2004100500 (A2)

A system (100) and corresponding methods are provided for enabling communication with an electronic apparatus via a network. The system comprises: a first device (140) for transmitting a communication comprising identification parameters associated with a second device (110), wherein the communication is compatible with a communication protocol of a first electronic apparatus (120a, b ...k); a first electronic apparatus for communicating with the second device, wherein first electronic apparatus comprises a first

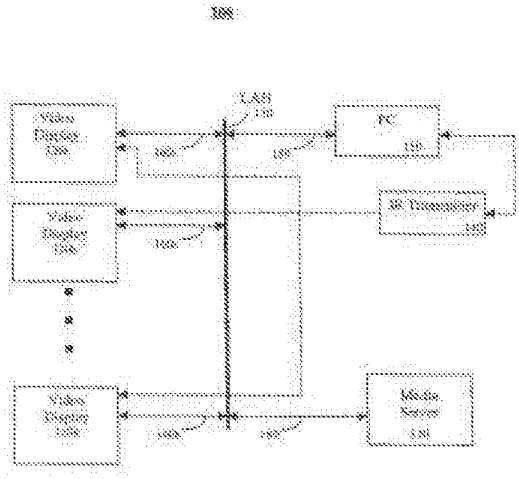

interface for wirelessly communicating with the first device and a second interface for communicating with the second device via a network (130); and a second device for communicating with the first electronic apparatus, with the second device communicating the first electronic apparatus via the network.

(19)日本国特許庁(JP)　(12)公表特許公報(A)　(11)特許出願公表番号
特表2006-525771
(P2006-525771A)
(43)公表日　平成18年11月9日(2006.11.9)

(51)Int.Cl.			F I			テーマコード（参考）
H04N 7/173	(2006.01)		H04N	7/173	630	5C164

審査請求 未請求　予備審査請求 未請求　（全 25 頁）

(21)出願番号　特願2006-514279(P2006-514279)
(86)(22)出願日　平成16年5月4日(2004.5.4)
(85)翻訳文提出日　平成17年11月4日(2005.11.4)
(86)国際出願番号　PCT/US2004/013859
(87)国際公開番号　WO2004/100500
(87)国際公開日　平成16年11月18日(2004.11.18)
(31)優先権主張番号　60/467,928
(32)優先日　平成15年5月5日(2003.5.5)
(33)優先権主張国　米国(US)

(71)出願人　501263810
トムソン　ライセンシング
Thomson Licensing
フランス国，　エフ－92100　ブローニュ　ビヤンクール，　ケ　アルフォンス　ル　ガロ，　46番地
46 Quai A. Le Gallo, F-92100 Boulogne-Billancourt, France
(74)代理人　100070150
弁理士　伊東　忠彦
(74)代理人　100091214
弁理士　大貫　進介
(74)代理人　100107766
弁理士　伊東　忠重

最終頁に続く

(54)【発明の名称】ネットワークを介して表示装置と通信するシステム及び方法

(57)【要約】
ネットワークを介して電子装置と通信することを可能にするシステム（１００）及び対応の方法が提供される。そのシステムは、第２の装置（１１０）に関連する識別パラメータを有する通信を送信し、通信は第１の電子装置（１２０ａ，ｂ・・・ｋ）の通信プロトコルと互換性がある第１の装置（１４０）と、第１の装置と無線通信する第１のインタフェースと、ネットワーク（１３０）を介して第２の装置と通信する第２のインタフェースとを有し、第２の装置と通信する第１の電子装置と、ネットワークを介して第１の電子装置と通信し、第１の電子装置と通信する第２の装置とを有する。

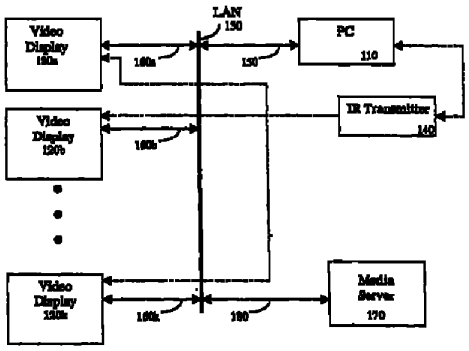

【特許請求の範囲】
【請求項１】
ネットワークを介して電子装置と通信する方法であって、
コンピュータに関連する識別パラメータを有する通信を受信し、前記通信は第１の電子装置の通信プロトコルと互換性があるステップと、
受信した識別パラメータに関連するコンピュータと通信を確立する要求を送信し、前記要求はネットワークを介して送信されるステップと、
前記要求に対する応答を受信し、前記応答は、前記コンピュータと前記第１の電子装置との間で通信を確立しようとし、前記応答は前記ネットワークを介して送信されるステップと、
前記要求に対する応答を確認し、通信を確立する要求が送信されたコンピュータが、前記受信した識別パラメータに関連するコンピュータであることを確保するステップと
を有する方法。
【請求項２】
請求項１に記載の方法であって、
前記コンピュータと前記第１の電子装置との間で通信を確立する要求は、前記通信が望まれる前記第１の装置から送信される方法。
【請求項３】
請求項１に記載の方法であって、
前記第１の電子装置は、工場定義の通信プロトコルを使用する方法。
【請求項４】
請求項１に記載の方法であって、
前記コンピュータに関連する識別パラメータは、前記コンピュータのＩＰアドレス及びポートを有する方法。
【請求項５】
請求項１に記載の方法であって、
前記コンピュータに関連する識別パラメータを前記第１の装置のメモリに格納することを更に有する方法。
【請求項６】
請求項１に記載の方法であって、
前記コンピュータからコマンドを受信し、前記コマンドは、前記第１の電子装置で所望の機能を実行することに関連することを更に有する方法。
【請求項７】
請求項６に記載の方法であって、
前記所望の機能は、前記第１の装置のサービス、テスト及び制御のうちの１つに関連する方法。
【請求項８】
請求項１に記載の方法であって、
前記ネットワークはＥｔｈｅｒｎｅｔネットワークである方法。
【請求項９】
請求項１に記載の方法であって、
前記コンピュータに関連する識別パラメータを有する通信を受信し、前記通信は、第２の電子装置の通信プロトコルと互換性があり、
受信した識別パラメータに関連するコンピュータと通信を確立する要求を送信し、前記要求は前記ネットワークを介して送信され、
前記要求に対する応答を受信し、前記応答は、前記コンピュータと前記第２の電子装置との間で通信を確立しようとし、前記応答は前記ネットワークを介して送信され、
前記要求に対する応答を確認し、通信を確立する要求が送信されたコンピュータが、前記受信した識別パラメータに関連するコンピュータであることを確保することを更に有する方法。

【請求項１０】
請求項９に記載の方法であって、
前記コンピュータからコマンドを受信し、前記コマンドは、前記第２の電子装置で所望の機能を実行することに関連することを更に有する方法。
【請求項１１】
ネットワークを介して電子装置と通信する方法であって、
コンピュータに関連する識別パラメータを有する通信を第１の電子装置に送信し、前記通信は前記第１の電子装置の通信プロトコルと互換性があり、
前記第１の電子装置と通信を確立する要求を受信し、前記要求はネットワークを介して送信され、
前記要求に対する応答を送信し、前記応答は、前記コンピュータと前記第１の電子装置との間で通信を確立しようとし、前記応答は前記ネットワークを介して送信されることを有する方法。
【請求項１２】
請求項１１に記載の方法であって、
前記コンピュータに関連する識別パラメータを有する通信は、前記第１の電子装置により使用される独自仕様のプロトコルを使用する方法。
【請求項１３】
請求項１１に記載の方法であって、
前記識別パラメータは、前記コンピュータのＩＰアドレス及びポートを有する方法。
【請求項１４】
請求項１１に記載の方法であって、
前記第１の電子装置にコマンドを送信し、前記コマンドは、前記第１の電子装置で所望の機能を実行することに関連することを更に有する方法。
【請求項１５】
請求項１４に記載の方法であって、
前記所望の機能は、前記第１の装置のサービス、テスト及び制御のうちの１つに関連する方法。
【請求項１６】
請求項１１に記載の方法であって、
前記ネットワークはＥｔｈｅｒｎｅｔネットワークである方法。
【請求項１７】
請求項１１に記載の方法であって、
前記コンピュータに関連する識別パラメータを有する通信を第２の電子装置に送信し、前記通信は、前記第２の電子装置の通信プロトコルと互換性があり、
前記第２の電子装置と通信を確立する要求を受信し、前記要求は前記ネットワークを介して送信され、
前記要求に対する応答を送信し、前記応答は、前記コンピュータと前記第２の電子装置との間で通信を確立しようとし、前記応答は前記ネットワークを介して送信されることを更に有する方法。
【請求項１８】
請求項１７に記載の方法であって、
前記第２の電子装置にコマンドを受信し、前記コマンドは、前記第２の電子装置で所望の機能を実行することに関連することを更に有する方法。
【請求項１９】
ネットワークを介して電子装置と通信するシステムであって、
第２の装置に関連する識別パラメータを有する通信を送信し、前記通信は第１の電子装置の通信プロトコルと互換性がある第１の装置と、
前記第１の装置と無線通信する第１のインタフェースと、ネットワークを介して前記第２の装置と通信する第２のインタフェースとを有し、前記第２の装置と通信する第１の電

子装置と、
前記ネットワークを介して前記第１の電子装置と通信し、前記第１の電子装置と通信する第２の装置と
を有するシステム。
【請求項２０】
請求項１９に記載のシステムであって、
前記第１の装置は、赤外線送信機であるシステム。
【請求項２１】
請求項１９に記載のシステムであって、
前記第１の装置により送信される識別パラメータは、前記第２の装置に関連するインターネットプロトコルアドレス及びポートを有するシステム。
【請求項２２】
請求項１９に記載のシステムであって、
前記第２の装置はコンピュータであるシステム。
【請求項２３】
請求項１９に記載のシステムであって、
前記第１の電子装置は、ビデオ表示装置であるシステム。
【請求項２４】
請求項１９に記載のシステムであって、
前記ネットワークはＥｔｈｅｒｎｅｔネットワークであるシステム。
【請求項２５】
請求項１９に記載のシステムであって、
前記第１の電子装置の前記第１のインタフェースは、赤外線信号をデコードするシステム。
【請求項２６】
請求項１９に記載のシステムであって、
前記第１の電子装置は、前記第２の装置に関連する識別パラメータを格納するメモリを更に有するシステム。
【請求項２７】
請求項１９に記載のシステムであって、
前記第２のインタフェースはＥｔｈｅｒｎｅｔコネクタであるシステム。
【請求項２８】
請求項１９に記載のシステムであって、
前記第１の電子装置は、前記第１の電子装置で所望の機能を実行することに関連する前記第２の装置により送信されたコマンドを実行するシステム。
【請求項２９】
請求項１９に記載のシステムであって、
前記第１及び第２の装置は、前記第１の電子装置と互換性のある独自仕様のプロトコルを使用するシステム。
【請求項３０】
請求項１９に記載のシステムであって、
前記第１の電子装置が前記第２の装置と通信を確立した後に、前記ネットワークを介して前記第２の装置と通信する第２の電子装置を更に有するシステム。
【請求項３１】
請求項３０に記載のシステムであって、
前記第２の電子装置はビデオ表示装置であるシステム。
【請求項３２】
ネットワークを介して電子装置と通信するために記録されたコンピュータプログラムロジックを有するコンピュータ使用可能媒体を有するコンピュータプログラムプロダクトであって、

前記コンピュータプログラムロジックは、
コンピュータに関連する識別パラメータを有する通信を受信し、前記通信は電子装置の通信プロトコルと互換性があるプログラムコードと、
受信した識別パラメータに関連するコンピュータと通信を確立する要求を送信し、前記要求はネットワークを介して送信されるプログラムコードと、
前記要求に対する応答を受信し、前記応答は、前記コンピュータと前記電子装置との間で通信を確立しようとし、前記応答は前記ネットワークを介して送信されるプログラムコードと、
前記要求に対する応答を確認し、通信を確立する要求が送信されたコンピュータが、前記受信した識別パラメータに関連するコンピュータであることを確保するプログラムコードと
を有するコンピュータプログラムプロダクト。
【請求項３３】
ネットワークを介して電子装置と通信するために記録されたコンピュータプログラムロジックを有するコンピュータ使用可能媒体を有するコンピュータプログラムプロダクトであって、
前記コンピュータプログラムロジックは、
コンピュータに関連する識別パラメータを有する通信を電子装置に送信し、前記通信は前記電子装置の通信プロトコルと互換性があるプログラムコードと、
前記電子装置と通信を確立する要求を受信し、前記要求はネットワークを介して送信されるプログラムコードと、
前記要求に対する応答を送信し、前記応答は、前記コンピュータと前記電子装置との間で通信を確立しようとし、前記応答は前記ネットワークを介して送信されるプログラムコードと
を有するコンピュータプログラムプロダクト。
【請求項３４】
Ｅｔｈｅｒｎｅｔネットワークを介してビデオ表示装置と通信するシステムであって、
前記ビデオ表示装置により使用される通信プロトコルを介してビデオ表示装置に赤外線信号を無線送信し、前記赤外線信号は、コンピュータに関連するインターネットプロトコルアドレス及びポートを有する赤外線送信機と、
前記赤外線信号を受信し、Ｅｔｈｅｒｎｅｔネットワークを介して前記コンピュータと通信し、前記赤外線信号を受信する赤外線受信機と、前記Ｅｔｈｅｒｎｅｔネットワークに接続するＥｔｈｅｒｎｅｔコネクタとを有するビデオ表示装置と、
前記ビデオ表示装置で所望の機能を実行し、前記Ｅｔｈｅｒｎｅｔネットワークに接続するＥｔｈｅｒｎｅｔコネクタと、前記ビデオ表示装置で実行される所望の機能を入力する入力手段を有するコンピュータと
を有するシステム。
【請求項３５】
表示装置で使用される表示技術に対応するメディアオブジェクトを受信する方法であって、
前記表示装置で使用される表示技術に関連する表示装置パラメータを決定するステップと、
前記パラメータを通信するステップと、
前記メディアオブジェクトを受信し、前記メディアオブジェクトは前記表示装置で使用される表示技術に対応するステップと
を有する方法。
【請求項３６】
請求項３５に記載の方法であって、
使用される表示技術を示す前記パラメータは、陰極線管、有機発光ダイオード、液晶ディスプレイ、シリコン上液晶、デジタル光プロジェクト及びプラズマのうち少なくとも１

つである方法。
【請求項３７】
請求項３６に記載の方法であって、
前記メディアオブジェクトは、表示技術に適したフォーマットでエンコードされる方法。
【請求項３８】
請求項３７に記載の方法であって、
前記メディアオブジェクトは、前記表示技術用に変更された視覚属性を有し、
前記視覚属性は、前記メディアオブジェクトが異なる表示技術を使用した表示装置に表示されるときに変更される方法。
【請求項３９】
請求項３８に記載の方法であって、
前記メディアオブジェクトは、デジタルテレビ放送システムのサブチャネルで送信され、前記変更されたメディアオブジェクトは、異なるサブチャネルで送信される方法。
【請求項４０】
表示装置に使用される表示技術に対応したメディアオブジェクトを送信する方法であって、
前記表示装置に使用される表示技術に関係する表示装置パラメータを決定し、前記パラメータは、前記表示装置からの前記メディアオブジェクトの要求の一部として受信されるステップと、
前記表示装置に前記メディアオブジェクトを送信し、前記メディアオブジェクトは、前記表示装置に使用される表示技術に対応するステップと、
を有する方法。
【請求項４１】
請求項４０に記載の方法であって、
使用される表示技術を示す前記パラメータは、陰極線管、有機発光ダイオード、液晶ディスプレイ、シリコン上液晶、デジタル光プロジェクト及びプラズマのうち少なくとも１つである方法。
【請求項４２】
請求項４１に記載の方法であって、
前記メディアオブジェクトは、表示技術に適したフォーマットでエンコードされる方法。
【請求項４３】
請求項４２に記載の方法であって、
前記メディアオブジェクトは、前記表示技術用に変更された視覚属性を有し、
前記視覚属性は、前記メディアオブジェクトが異なる表示技術を使用した表示装置に表示されるときに変更される方法。
【請求項４４】
請求項４３に記載の方法であって、
前記メディアオブジェクトは、デジタルテレビ放送システムのサブチャネルで送信され、前記変更されたメディアオブジェクトは、異なるサブチャネルで送信される方法。
【発明の詳細な説明】
【技術分野】
【０００１】
本発明は、電子装置との通信に関し、特にネットワークを介してビデオ表示装置と通信するシステム及び方法に関する。
【背景技術】
【０００２】
ビデオ表示装置のような電子装置は、ネットワーク接続を通じてコンピュータを介して制御され得る。音量又は色調節の変更のような調整は、テレビのようなビデオ表示装置の

ノブを調整することにより実行されるのではなく、ビデオ表示装置のスクリーンのメニューとインタフェースすることにより、又は赤外線リモコンを介して実行される。コンピュータ制御のビデオ表示装置の採用は、現代の表示装置の特徴及び機能を拡張してきた。例えば、コンピュータ制御のビデオ表示装置は、サービス又は修理について電子的に診断され、自動テストを受け、様々な機能を実行するように制御され得る。更に、これらのビデオ表示装置は、Ｅｔｈｅｒｎｅｔ、トークンリング、非同期転送モード（ＡＴＭ）等のようなネットワークプロトコルを使用してローカルエリアネットワーク（ＬＡＮ）を介して相互に接続され得る。

【０００３】

コンピュータ制御可能ビデオ表示装置のサービス又はテストのような所望の機能を実行するために、ビデオ表示装置製造者及びサービスプロバイダにより複数の通信技術が開発され、このような動作を実現している。これらの技術は、一般的にコンピュータと赤外線送信機とを必要とし、これらはコンピュータ制御のビデオ表示装置と通信するためにサービス技術者により使用される。コンピュータとビデオ表示装置との間の通信チャネルは、場合によってはＥｔｈｅｒｎｅｔ接続で行われる。しかし、セキュリティの目的で、コンピュータ制御のビデオ表示装置は、一般的にビデオ表示装置と互換性のあるコンピュータへのアクセスのみを認め、それによって、無許可のユーザがビデオ表示装置へのアクセスを得ることを回避する。

【０００４】

コンピュータを介してビデオ表示装置と通信するために、ビデオ表示装置のＩＰアドレスとポートとを認識しているサービス技術者は、そのコンピュータのＩＰアドレスとポートとを再構成する。サービス技術者によるネットワーク知識の欠如により、及びコンピュータのＩＰアドレスの構成及び復旧を自動化する機能を除外するオペレーティングシステムの増加により、この処理はいくらか禁じられ得る。更に、現在の通信技術は、サービス技術者がネットワークで同時に１つより多いビデオ表示装置と通信することを妨げている。

【発明の開示】

【発明が解決しようとする課題】

【０００５】

従って、サービス技術者がネットワーク環境の広範囲の知識を必要としないネットワークを介して、ビデオ表示装置のような１つ以上の電子装置と通信するシステム及び方法の必要性が存在する。

【課題を解決するための手段】

【０００６】

本発明の一実施例では、ネットワークを介して電子装置と通信する方法が提示される。その方法は、コンピュータに関連する識別パラメータを有する通信を受信し、通信は第１の電子装置の通信プロトコルと互換性があるステップと、受信した識別パラメータに関連するコンピュータと通信を確立する要求を送信し、要求はネットワークを介して送信されるステップと、要求に対する応答を受信し、応答は、コンピュータと第１の電子装置との間で通信を確立しようとし、応答はネットワークを介して送信されるステップと、要求に対する応答を確認し、通信を確立する要求が送信されたコンピュータが、受信した識別パラメータに関連するコンピュータであることを確保するステップとを有する。前記の方法を実装するシステムも開示される。

【０００７】

本発明の他の実施例では、表示装置の特性に基づいてメディアオブジェクトを受信するメディアサーバと通信する方法が提示される。その方法は、表示装置に使用される表示技術の形式を決定し、それにより、表示装置は、その表示装置用の視覚的再生に適したメディアオブジェクトを受信する。異なる表示技術を備えた表示装置は、同じ源素材から生成された異なるメディアオブジェクトを受信する。

【発明を実施するための最良の形態】

【０００８】
ここで使用される“メディアオブジェクト”という用語は、オーディオ、ビデオ、テキスト、マルチメディアデータファイル及びストリーミングメディアファイルを含む。マルチメディアオブジェクトは、テキスト、画像、ビデオ及びオーディオデータの何らかの組み合わせを有する。ストリーミングメディアは、インターネット、衛星又は他の通信ネットワークを介してユーザに配信され、全体ファイルの配信が完了する前にユーザのコンピュータ／装置で再生し始めるオーディオ、ビデオ、マルチメディア、テキスト及びインタラクティブデータファイルを有する。メディアオブジェクトは、インターネット、衛星（デジタル衛星システム、デジタルビデオシステム－衛星）、ケーブル、デジタル加入者線、Ｔ１回線、無線ネットワーク、又はメディアオブジェクトを配信可能な他の配信システムを含み、如何なる通信ネットワークで送信されてもよい。

【０００９】
メディアオブジェクトの内容の例は、歌曲、政治演説、ニュース放送、映画予告、映画、テレビショーの放送、ラジオ放送、金融の電話会議、生のコンサート、ウェブカメラの映像、及び他の特別のイベントを含む。メディアオブジェクトは、ＲＥＡＬＡＵＩＤＯ（登録商標）、ＲＥＡＬＶＩＤＥＯ（登録商標）、ＲＥＡＬＭＥＤＩＡ（登録商標）、ＡＰＰＬＥ ＱＵＩＣＫＴＩＭＥ（登録商標）、ＭＩＣＲＯＳＯＦＴ ＷＩＮＤＯＷＳ（登録商標）のＭＥＤＩＡ ＦＯＲＭＡＴ、ＱＵＩＣＫＴＩＭＥ（登録商標）、ＭＰＥＧ－２（ＭＯＴＩＯＮ ＰＩＣＴＵＲＥＳ ＥＸＰＥＲＴＳ ＧＲＯＵＰ） ＶＩＤＥＯ ＣＯＭＰＲＥＳＳＩＯＮ、ＭＰＥＧ－４ ＶＩＤＥＯ ＡＮＤ／ＯＲ ＡＵＩＤＩＯ ＣＯＭＰＲＥＳＳＩＯＮ、ＪＯＩＮＴ ＶＩＤＥＯ ＴＥＡＭ ＣＯＭＰＲＥＳＳＩＯＮ ＦＯＲＭＡＴ（ＭＰＥＧ－４ ｐａｒｔ １０ ＡＶＣ、Ｈ・２６４）、ＭＰＥＧ－２ ＬＡＹＥＲ ＩＩＩ ＡＵＤＩＯ、ＭＰ３（登録商標）を含み、様々なフォーマットにエンコードされる。一般的に、メディアオブジェクトは、特定のフィーマットでの互換性を示す拡張子（サフィックス）で示される。例えば、拡張子・ｒａｍ、・ｒｍ、・ｒｐｍのうち１つで終わるメディアオブジェクト（例えばオーディオ及びビデオファイル）は、ＲＥＡＬＭＥＤＩＡ（登録商標）のフォーマットと互換性がある。ファイル拡張子及びその互換フォーマットのいくつかの例が図１に記載されている。メディア形式、拡張子及び互換フォーマットの更に包括的なリストは、ｈｔｔｐ：／／ｗｗｗ・ｂｏｗｅｒｓ・ｃｃ／ｅｘｔｅｎｓｉｏｎｓ２・ｈｔｍに見出され得る。

【００１０】

【表１】

フォーマット	拡張子
REALMEDIA®	.ram, .rm, .rpm
APPLE QUICKTIME®	.mov, .qif
MICROSOFT WINDOWS® MEDIA PLAYER	.wma, .cmr, .avi
MACROMEDIA FLASH	.swf, .swl
MPEG	.mpg, .mpa, .mp1, .mp2
MPEG-2 LAYER III Audio	.mp3, .m3a, .m3u

本発明の図示の実施例は、“ほぼ動画品質”のビデオ提示を表すビデオデータを有するメディアオブジェクトで動作する。このようなメディアオブジェクトは、ＭＰＥＧ－２（Ｍｏｔｉｏｎ Ｐｉｃｔｕｒｅ Ｓｔａｎｄａｒｄｓ Ｇｒｏｕｐ Ｓｔａｎｄａｒｄ ＩＳＯ／ＩＥＣ １３８１８－１：２０００）及びＩＴＵ－Ｔ Ｈ・２６４／ＭＰＥＧ ＡＶＣ（ＩＳＯ／ＩＥＣ １４４９６－１０）のような様々なフォーマットでエンコードされてもよく、非圧縮のビデオでもよい。本発明はまた、Ａｄｖａｎｃｅｄ Ｔｅｌｅｖｉｓｉｏｎ Ｓｙｓｔｅｍ（ＡＴＳＣ）又はＤｉｇｉｔａｌ Ｖｉｄｅｏ Ｂｒｏａｄｃａｓｔｓ（ＤＶＢ）互換のビデオ信号で使用されるような電波放送プログラムで動作する点に留意すべきである。

【００１１】

図１は、本発明の例示的な実施例による電子装置と通信するシステム１００のブロック図である。図１に示すように、システム１００は、とりわけ、パーソナルコンピュータ（ＰＣ）１１０と、電子装置（例えばビデオ表示装置１２０ａ，ｂ・・・ｋ）と、赤外線（ＩＲ）送信機１４０と、メディアサーバ１７０とを有する。ＰＣ１１０及びビデオ表示装置１２０ａ，ｂ・・・ｋは、接続手段１５０、１６０ａ，ｂ，・・・ｋ及び接続手段１８０の対を介してローカルエリアネットワーク（ＬＡＮ）１３０で相互に接続されている。

【００１２】

ＰＣ１１０は、ポータブル又はラップトップコンピュータ、携帯情報端末（ＰＤＡ）等でもよく、ビデオ表示装置１２０ａ，ｂ・・・ｋのうち１つの機能セットをサポートすることができる工場定義又は独自仕様のプロトコルのような通信プロトコルを使用してビデオ表示装置１２０ａ，ｂ・・・ｋと通信することができる。ビデオ表示装置１２０ａ，ｂ・・・ｋは、高解像度テレビ（ＥＤＴＶ：ｅｎｈａｎｃｅｄ－ｄｅｆｉｎｉｔｉｏｎ ｔｅｌｅｖｉｓｉｏｎ）及び高品位テレビ（ＨＤＴＶ：ｈｉｇｈ－ｄｅｆｉｎｉｔｉｏｎ ｖｉｄｅｏ ｔｅｌｅｖｉｓｉｏｎ）機能を有するデジタルビデオ表示装置でもよく、プラズマ、液晶、有機発光、又は陰極線管（ＣＲＴ）ディスプレイ等でもよい。ビデオ表示装置１２０ａ，ｂ・・・ｋはまた、ビデオ表示装置１２０ａ，ｂ・・・ｋのインタフェースメニューのような外部インタフェース、接続手段１５０、１６０ａ，ｂ・・・ｋ又は赤外線受信機を介して、ＰＣ１１０及びＩＲ送信機１４０のような装置と通信可能である。ＩＲ送信機１４０は、赤外線送信機能を有するユニバーサルリモコンのような一般のビデオ表示装置のリモコンでもよい。ビデオ表示装置１２０ａ，ｂ・・・ｋはまた、ＲＥＡＬ

ＰＬＡＹＥＲ又はＷＩＮＤＯＷＳ　ＭＥＤＩＡ　ＰＬＡＹＥＲのようなメディアプレイヤアプリケーションを使用して受信したメディアオブジェクトをデコード可能であることが好ましい。

【００１３】

図１の電子装置は、複数のビデオ表示装置１２０ａ，ｂ・・・ｋのうちの１つとして図示されているが、電子装置は、衛星受信機、デジタルビデオディスク（ＤＶＤ）プレイヤ、ステレオ装置等、他のパーソナルコンピュータ、セットトップボックスのような如何なる数のネットワーク装置でもよく、ネットワークで接続されてクライアント・サーバ型又はピア・ツー・ピア型アーキテクチャを介してアクセスされてもよい。

【００１４】

ＬＡＮ１３０は、１０ＢａｓｅＴ、１００ＢａｓｅＴ若しくは１０００ＢａｓｅＴ標準、トークンリング、非同期転送モード（ＡＴＭ）等、又はビデオ表示装置のインターネットプロトコル（ＩＰ）アドレスの自動構成及び復旧を可能にする如何なるネットワークプロトコルを使用したＥｔｈｅｒｎｅｔのようなネットワークプロトコルを使用してもよい。接続手段１５０、１６０ａ，ｂ・・・ｋ及び接続手段１８０は、例えばＥｔｈｅｒｎｅｔネットワークで、ＰＣ１１０とビデオ表示装置１２０ａ，ｂ・・・ｋとを接続可能なツイストペアケーブルでもよい。接続手段１５０、１６０ａ，ｂ・・・ｋ及び接続手段１８０はまた、ＲＪ－４５形式のＥｔｈｅｒｎｅｔコネクタで終端処理されてもよいが、他の接続も使用可能である。

【００１５】

接続手段１５０及び１８０は、インターネットのようなネットワーク構造の使用を通じてＬＡＮ１３０に接続されてもよいことも考えられる。ネットワーク構造の使用は、当該技術分野において既知の如何なる形式のネットワークでもよい。このようなネットワークは、サーバのサーバ側のリソースとクライアントのクライアント側のリソースとの間で複数の接続に適合できることが好ましく、このような接続は、ＵＤＰ型、ＴＣＰ／ＩＰ型又はその混合である。ネットワーク１５０により適合された帯域は、Ｔ１接続（１・５メガビット／秒（Ｍｂｐｓ））、Ｔ３接続（４５Ｍｂｐｓ）、ＤＳ３接続（４５Ｍｂｐｓ）、ＯＣ３接続（１５５Ｍｂｐｓ）、ＯＣ１２（２４８０００Ｍｂｐｓ）等のような広帯域接続であることが好ましい。

【００１６】

メディアサーバ１７０は、複数のメディアオブジェクトを格納可能なテラバイト及び／又はギガバイトの容量を有するハードドライブのマトリクスのような記憶装置である。メディアサーバ１７０はまた、ＬＡＮ１３０を介して接続手段１８０を通じて表示装置１２０ａ・・・ｋにこのようなメディアオブジェクトを配信することができる。

【００１７】

図２は、本発明で使用されるＰＣ２００のブロック図である。ＰＣ２００は、図１のＰＣ１１０の代わりに又はそれと共に使用されてもよい。ＰＣ２００は、中央処理装置（ＣＰＵ）２１０とメモリ２２０とを有し、データバス２５０を介して出力２３０及び出力２４０に接続されている。メモリ２２０は、ランダムアクセスメモリ（ＲＡＭ）２６０と読み取り専用メモリ（ＲＯＭ）２７０とを有する。メモリ２２０はまた、データベース、ディスクドライブ、テープドライブ等、又はその組み合わせを有し得る。ＲＡＭ２６０は、ＣＰＵ２１０のプログラムの実行中に使用されるデータを格納するデータメモリとして機能し、作業領域として使用される。ＲＯＭ２７０は、ＣＰＵ２１０で実行されるプログラムを格納するプログラムメモリとして機能する。入力２３０は、キーボード、マウス、接続手段、入力装置等により構成され、出力２４０は、液晶ディスプレイ（ＬＣＤ）、ＣＲＴディスプレイ、プリンタ、接続手段等により構成される。

【００１８】

ＣＰＵ２１０及びメモリ２２０は、電子装置（例えば図１のビデオ表示装置１２０ａ，ｂ・・・ｋ）で使用される複数の通信プロトコルを介して通信することに関連するデータを有することがわかる。ビデオ表示装置１２０ａ，ｂ・・・ｋと通信することに関連する

データは、とりわけ、ＰＣ２００のＩＰアドレス、ポート及びパスワードのような識別パラメータを有する。更に、ＰＣ２００は、そのメモリ２２０に格納されたソフトウェアを有し、ビデオ表示装置１２０ａ，ｂ，・・・ｋを診断して修理する方法をサービス技術者に提供する。このソフトウェアは、ビデオ表示装置の問題のサービス及び診断を行うために、Ｔｈｏｍｓｏｎから入手可能なＣＨＩＰＰＥＲ　ＣＨＥＣＫ（登録商標）のようなビデオ表示装置のサービス技術者により一般的に使用される形式のものでもよい。

【００１９】

図３は、本発明で使用されるビデオ表示装置の制御システム３００のブロック図である。制御システム３００は、とりわけ、マイクロプロセッサ（μＰ）３１０と、電気消去可能読み取り専用メモリ（ＥＥＰＲＯＭ）３２０と、出力装置３４０とを有する。マイクロプロセッサ３１０、ＥＥＰＲＯＭ３２０及び出力装置３４０は、データバス３５０を介して相互に通信する。入力３６０はマイクロプロセッサ３１０に接続されており、バックエンドプロセッサ３３０はデータバス３５０に接続されている。

【００２０】

マイクロプロセッサ３１０は、発光ダイオード（ＬＥＤ）、デジタルビデオインタフェース（例えば高解像度マルチメディアインタフェース（ＨＤＭＩ：ｈｉｇｈ　ｄｅｆｉｎｉｔｉｏｎ　ｍｕｌｔｉｍｅｄｉａ　ｉｎｔｅｒｆａｃｅ）１３９４）、赤外線送信機等のような出力装置３４０と、バックエンドプロセッサ３３０と通信し、図１のビデオ表示装置１２０ａ，ｂ・・・ｋのうちの１つのようなデジタルビデオ表示装置を制御する。マイクロプロセッサ３１０はまた、バックエンドプロセッサ３３０と通信し、ビデオ処理のようなバックエンド処理を実行する。バックエンドプロセッサ３３０はまた、出力装置３４０に結合されており、例えばディスプレイパラメータを制御し、ビデオ品質を改善する。マイクロプロセッサ３１０はまた、ビデオ表示装置のフロントパネル、リモコン、ＥＥＰＲＯＭ３２０及びデータバス３５０に接続されている何らかの装置から入力３２０を受信する。ＥＥＰＲＯＭ３２０は、ビデオ表示装置１２０ａ，ｂ・・・ｋのうちの１つを制御するためにマイクロプロセッサにより使用される値を格納する。これらの値は、例えば調節情報と初期化信号と顧客情報とを含んでもよい。例示的な顧客情報は、チャネル走査リストと色と輝度と音量レベルとを含んでもよい。

【００２１】

ＥＥＰＲＯＭ３２０は、ビデオ表示装置１２０ａ，ｂ・・・ｋのうちの１つが作られたときにＥＥＰＲＯＭ３２０に格納されたビデオ表示装置１２０ａ，ｂ・・・ｋのうちの１つに関連する値のような情報を有する。ＥＥＰＲＯＭ３２０はまた、ＰＣ１１０又はＩＲ送信機１４０のような外部装置からそれに書き込まれた情報を有する機能を有する。従って、例えば、ＥＥＰＲＯＭ３２０は、ＰＣ１１０からそれに書き込まれた識別パラメータを格納することができる。これらのパラメータは、ＰＣ１１０のＩＰアドレス及びポートを有してもよく、それにより、ＰＣ１１０がビデオ表示装置１２０ａ，ｂ・・・ｋのうちの１つと通信することが可能になる。ＰＣ１１０がビデオ表示装置１２０ａ，ｂ・・・ｋのうちの１つと通信すると、ＰＣ１１０のサービス及びテストソフトウェアは、ビデオ表示装置１２０ａ，ｂ・・・ｋのうちの１つにコマンドを送信し、ビデオ表示装置１２０ａ，ｂ・・・ｋのうちの１つで複数の動作を実行する。

【００２２】

図４は、本発明の例示的な実施例によるビデオ表示装置と通信するシステムの動作４００を示したフローチャートである。図４に示す通り、サービス技術者は、例えば図１のビデオ表示装置１２０ａに通信を送信する（ステップ４１０）。通信は、例えば図１のＩＲ送信機１４０により送信される。通信はまた、ビデオ表示装置１２０ａのスクリーンのインタフェースメニューにアクセスして通信を入力することにより、ビデオ表示装置１２０ａにも送信され得ることがわかる。通信は、ビデオ表示装置１２０ａに対してＰＣ（例えば図１のＰＣ１１０）を特定することに関連するパラメータを有する。これらのパラメータは、とりわけ、ＰＣ１１０のＩＰアドレス及びポートを有する。通信は、ビデオ表示装置１２０ａと互換性のある工場定義のプロトコル又は独自仕様のプロトコルを介して送信

されることがわかる。

【００２３】

通信が送信された後に、それはビデオ表示装置１２０ａにより受信される（ステップ４２０）。ビデオ表示装置１２０ａに配置された赤外線受信機がこの通信を受信する。通信の受信時に、ビデオ表示装置１２０ａは、通信に関連する識別パラメータを図３のＥＥＰＲＯＭ３２０のようなメモリに格納する（ステップ４３０）。通信に安全であると考えられるビデオ表示装置１２０により使用されるプロトコルを介して通信が送信されるため、このことが生じ、それによって通信に関連するデータが格納されることが可能になる。ＰＣ１１０のＩＰアドレス及びポートを有する識別パラメータがビデオ表示装置１２０ａのメモリに格納されると、ビデオ表示装置１２０ａは、ビデオ表示装置１２０ａとＰＣ１１０との間の通信を確立しようとして、（ステップ４１０の通信で指定されたポートで）ＰＣ１１０に信号を送信する（ステップ４４０）。換言すると、ビデオ表示装置１２０ａは、ＰＣ１１０の識別情報を受信してＰＣ１１０から更なる通信を受信する用意ができていることをＰＣ１１０に通知するハンドシェイクプロトコルを介してメッセージを送信することにより、ＰＣ１１０とハンドシェイクを完了しようとする。

【００２４】

更なる通信を確立するためのビデオ表示装置１２０ａの要求を受信すると、ＰＣ１１０は、ビデオ表示装置１２０ａが通信するべき装置であることを示す通信を送信することにより、要求に応答する（ステップ４５０）。それによってハンドシェイクを完了する。ステップ４１０においてＰＣ１１０のＩＰアドレス及びポートがサービス技術者によりビデオ表示装置１２０ａのメモリにプログラムされているため、このハンドシェイクは、ビデオ表示装置１２０ａ及びＰＣ１１０が相互に接続されており、詐称者又は無許可のユーザでないことを確保する。この構成では、ビデオ表示装置１２０ａはクライアント・サーバ型アーキテクチャのクライアントとして機能し、ＰＣ１１０はリモートサーバとして機能することがわかる。

【００２５】

ビデオ表示装置１２０ａとＰＣ１１０との間の安全な通信チャネルが確立された後に、ＰＣ１１０は、ビデオ表示装置１２０ａと通信し、例えばサービス又はテストに関して、ビデオ表示装置で所望の機能を実行してもよい（ステップ４６０）。実行される機能は、色、外形、ビデオ、ステレオ若しくはピクチャ・イン・ピクチャ（ＰＩＰ）の調節、又は画質に関連する様々な較正値に対する調整等のうちの１つでもよい。

【００２６】

本発明の代替実施例では、図１のＰＣ１１０は、ビデオ表示装置１２０ａ，ｂ・・・ｋのような１つより多い電子装置と通信することができる。このことは、（図４のステップ４１０－４５０で前述したものと同じ又は類似の処理を実行することにより）ＰＣ１１０がビデオ表示装置１２０ａと既に通信しているときに、例えばビデオ表示装置１２０ｂにＰＣ１１０のＩＰアドレス及びポートを送信することにより実現される。これを実現するために、ＰＣ１１０は、ビデオ表示装置１２０ｂに異なるポートを割り当てる。ステップ４１０－４５０が完了すると、ＰＣ１１０はビデオ表示装置１２０ａで所望の機能を依然として実行する一方で、ビデオ表示装置１２０ｂで所望の機能を実行し始める。１つより多いビデオ表示装置で機能を実行しているときに、ＰＣ１１０は、ＬＣＤディスプレイのような出力にビデオ表示装置毎に異なるウィンドウを有することができる。

【００２７】

（ビデオ表示装置１２０ａ用の）ＰＣ１１０のＩＰアドレス及びポートがビデオ表示装置１２０ａに送信されるのと同時に、（ビデオ表示装置１２０ｂ用の）ＰＣ１１０のＩＰアドレス及びポートはビデオ表示装置１２０ｂに送信され得ることが更にわかる。それによって、サービス技術者が同時に１つより多いビデオ表示装置と接続して通信することが可能になる。

【００２８】

１つより多いビデオ表示装置と通信することにより、同時に１つのビデオ表示装置で機

能を実行することに限定されないため、ＰＣ１１０はサービス技術者に柔軟性を提供する。更に、１つより多いビデオ表示装置又は電子装置の制御を有することにより、本発明のサービス技術者及び／又は許可されたユーザは、例えば複数のビデオ表示装置を同時にオフ又はオンしてもよく、チャネルや音量等を変更してもよく、また、例えば複数のＤＶＤプレイヤで同じ映画を視聴してもよい。

【００２９】

本発明の代替の変形では、コンピュータの識別情報は、Ｂｌｕｅｔｏｏｔｈ、Ｉｎｓｔｉｔｕｔｅ ｏｆ Ｅｌｅｃｔｒｉｃａｌ ａｎｄ Ｅｌｅｃｔｒｏｎｉｃｓ Ｅｎｇｉｎｅｅｒｓ（ＩＥＥＥ）８０２・１１又は赤外線通信（ＩｒＤＡ）無線伝送技術を使用して、送信機から無線で送信されてもよい。

【００３０】

図５は、ビデオ表示装置の特性に応じてビデオ表示装置と通信し、メディアオブジェクトを受信する方法５００を開示したフローチャートである。特に、ＯＬＥＤ、プラズマ、ＬＣＤ等のようなビデオ表示装置の技術の発達と共に、表示装置でメディアサービスを処理する際に変更が存在してもよいことがわかる。例えば、ＭＰＥＧ－２ビデオコーデックでエンコードされたメディアサービスは、陰極線管（ＣＲＴ）表示装置で表示されたときには動画品質でもよいが、ＯＬＥＤ表示装置で処理されたときには不鮮明でもよい。

【００３１】

前述の問題の原因は、メディアサービスをエンコードするために使用されるエンコード方法に関係する。一般的に、エンコーダは、元の源素材からエンコード後のメディアオブジェクトのサイズを減少させる圧縮技術を使用する。例えば、ＭＰＥＧ－２型のエンコーダは、ビデオ形式の源素材をエンコードするために使用されると、４０～５０：１の圧縮を実現する。一部の圧縮は、人間がメディアオブジェクトをどのように視覚的及び聴覚的に認識するかに関係する精神測定関数として知られる技術を利用する。その技術では、人間がデータの一部の損失を認識することなく、データの一部が源素材から除去され得る。ＭＰＥＧ－２及び他のエンコード技術の発達は、どの視覚又はオーディオ情報が保持される必要があり、どれが源素材から除去され得るかを決定するために人間がテストすることで発達した。人間の視覚認識のテストについての背景には、ＩＴＵ Ｒｅｃｏｍｍｅｎｄａｔｉｏｎ ＢＴ・５００－８、“Ｍｅｔｈｏｄｏｌｏｇｙ ｆｏｒ Ｓｕｂｊｅｃｔｉｖｅ Ａｓｓｅｓｓｍｅｎｔ ｏｆ ｔｈｅ Ｑｕａｌｉｔｙ ｏｆ Ｔｅｌｅｖｉｓｉｏｎ Ｐｉｃｔｕｒｅｓ”、１９９８を参照のこと。

【００３２】

新しいディスプレイ技術の発達と共に、第２の表示装置（ＣＲＴディスプレイ）で明らかでないように（例えばＯＬＥＤ表示装置で）選択されたエンコード技術による加工物を人間が気付かないことがある。この例を続けると、人間は、ＣＲＴで人間に明らかでない、ＯＬＥＤ表示装置でＭＰＥＧ－２エンコードのビデオに使用されたマクロブロックの加工物に気付く場合がある。これは、ビデオ画像を処理するために使用される表示装置技術の基礎の物理特性によることがある。従って、ＣＲＴのスクリーンリフレッシュ技術は、ＯＬＥＤ表示装置のスクリーンリフレッシュ技術よりＭＰＥＧ－２のそのような加工物を隠すのに優れていることがある。

【００３３】

人間の認識のこのような欠如を認識して、本発明は、そのようなメディアオブジェクトを処理するために使用される表示装置に適したエンコードフォーマットで、メディアオブジェクトを配信するアーキテクチャを開示する。図１を参照することによる本発明の例示的な実施例では、ビデオ表示装置１２０ａはＣＲＴ型のビデオ表示装置を表し、ビデオ表示装置１２０ｂはＯＬＥＤ表示装置を表す。双方の表示装置は、接続手段１８０を通じてメディアサーバ１７０に接続されている。

【００３４】

ステップ５１０において、表示装置１２０ａは、メディアサーバ１７０からメディアオブジェクトを要求する。例えば、メディアオブジェクトの要求は、ビデオオンデマンドシ

ステムのビデオを通じて配信された映画用のもの、又はインターネットを通じてストリーミングメディアとして配信されたメディアオブジェクトである。ステップ５２０において、メディアサーバ１７０はこの要求を受信し、表示装置１２０ａの機能を決定する。本発明の好ましい実施例では、表示装置１２０ａは、メディアサービスを処理するときにその装置で使用される表示装置の技術を識別する装置パラメータの一部としての識別パラメータを送信する。例えば、表示装置１２０ａは、表示装置をＣＲＴ型のテレビとして識別するメタデータを送信する。表２は、拡張マークアップ言語フォーマットを使用して表示装置の技術を識別するために使用され得るメタデータフィールドＤＩＳＰＬＡＹＤＥＶＩＣＥ及び対応の値の実施例を表している。例えば、＜ＤＩＳＰＬＡＹＤＥＶＩＣＥ＞ＣＲＴ＜／ＤＩＳＰＬＡＹＤＥＶＩＣＥ＞として受信したメタデータは、ＣＲＴ型の表示装置の技術を表す。本発明の原理に従って他のメタデータのフォーマットも使用され得る。

【００３５】

【表２】

ディスプレイ技術	値
陰極線管	CRT
有機発光ダイオード	OLE
液晶ディスプレイ	LCD
シリコン上液晶	LCO
デジタル光プロジェクタ	DLP
プラズマ	PLA

代替として、メディアオブジェクトについての表示装置１２０ａによる要求に基づいて、表示装置１２０ａのＩＰ及び／又はポートアドレスは、要求の一部として送信される。メディアサーバ１７０は、要求の一部であるＩＰアドレス及び／又はポートアドレス情報により表示装置を識別するために使用される技術を識別する情報を含むデータベースを有することが好ましい。この情報は、ネットワーク接続を通じて表示装置を登録したときに、ユーザにより入力され、メディアサーバ１７０により格納される。

【００３６】

ステップ５３０は、表示装置１２０ａが識別パラメータをメディアサーバ１７０に通信する任意選択のステップを表す。一般的に、この通信は、メディアサーバ１７０が表示装置に使用される表示技術を要求することにより行われるクエリに応じるものである。識別パラメータのこの通信は、表２に示すメタデータと類似することが好ましいが、識別パラメータの他のフォーマットが使用されてもよい。

【００３７】

メディアサーバ１７０により受信された識別パラメータに応じて、ステップ５４０において、メディアサーバは、表示装置に使用される表示技術に対応したビデオ装置１２０ａにメディアオブジェクトを通信する。好ましい実施例では、メディアサーバ１７０は、表示装置の技術について最適なビデオ画像を作るものとして予め定められたエンコード技術に対して表示技術を指定する参照テーブル又はデータベースエントリーを利用する。例えば、Ｗｉｎｄｏｗｓ　Ｍｅｄｉａ　９エンコードのメディアオブジェクトが最適なビデオ提示を作ることがあるＯＬＥＤディスプレイに対して、ＣＲＴでは、ＭＰＥＧ－２エンコードのメディアオブジェクトが最適のビデオ提示を作ると決定されてもよい。メディアサーバ１７０のオペレータにより行われた決定に従って、如何なるエンコードフォーマットが選択されてもよい。表示装置の技術における更なる改善と共に新しいエンコード技術が作られると、これらの決定が変化してもよい。

【００３８】

好ましい実施例では、メディアサーバ１７０は、異なるフォーマットでエンコードされたメディアオブジェクトと同じ源素材の複数のバージョンを格納する。この例では、メデ

ィアサーバ１７０は、ＭＰＥＧ－２フォーマットでエンコードされたメディアオブジェクト及びＷｉｎｄｏｗｓ　Ｍｅｄｉａ　９フォーマットでエンコードされたメディアオブジェクトとして映画の源素材を格納する。代替として、メディアサーバ１７０は、前述の表示技術についての指定のエンコードフォーマットに従って、エンコーダを使用してリアルタイム又はほぼリアルタイムに、メディアオブジェクトの源素材を適切なフォーマットにエンコードする。

【００３９】

次に、メディアサーバ１７０は、この例ではＣＲＴとして指定された表示装置１２０ａにＭＰＥＧ－２エンコードのメディアオブジェクトを送信する。メディアオブジェクトは、接続手段１８０及びＬＡＮ１３０を通じて表示装置１２０ａに送信される。表示装置１２０ｂが同じ映画を要求する場合には、メディアサーバ１７０は、前述のように、Ｗｉｎｄｏｗｓ　Ｍｅｄｉａ　９エンコードのメディアオブジェクトをＯＬＥＤ型の表示装置に送信する。他のエンコードフォーマット及び表示装置も、本発明の原理に従って考えられる。

【００４０】

更に、メディアオブジェクトのフォーマット毎に、メディアオブジェクトを生成するために使用された源素材の視覚属性は、特定の表示技術に最適のビデオ品質を作るために変更される。変更される視覚属性は、色、色合い、コントラスト、色相、彩度、輝度、フレームレート、フィールド毎のライン、画素等を含む。視覚属性は、特定の技術の表示装置での最適な視覚ビデオを提供するために実験的に決定されたパラメータに従って選択及び変更される。

【００４１】

ステップ５５０において、メディアオブジェクトを受信した表示装置は、ビデオとしてオブジェクトを処理する。この例では、各表示装置は、受信したメディアサービスをデコード可能なデコーダを有する。従って、表示装置１２０ａはＭＰＥＧ－２ビデオデコーダを有し、表示装置１２０ｂはＷｉｎｄｏｗｓ　Ｍｅｄｉａ　９ビデオデコーダを有する。表示装置のデコーダは、表示装置によりデコードされるメディアオブジェクトのフォーマットに従って選択される。

【００４２】

本発明の代替実施例では、マルチキャストされたデジタル放送のサブチャネル又は“マイナー”チャネルが、ＡＴＳＣ又はＤＶＢ型のテレビシステムに使用されるメディアオブジェクトの複数のバージョンを送信するために使用されてもよい。特に、デジタル放送システムのサブチャネルは、第１の技術の表示装置用のプログラムを運ぶように指定され、第２の技術の表示装置用のプログラムを運ぶために第２のサブチャネルを利用してもよい。この場合、メディアオブジェクトは同じ源素材から生成される。例えば、プログラムがＬＣＤスクリーンでの表示用に色補正された第２のサブチャネルで運ばれるプログラムに対して、第１のサブチャネルで送信されるプログラムは、プラズマ装置での表示用に変更されたプログラムの色のガンマ値を有してもよい。プログラムの他の属性も、本発明の原理に従って変更されてもよい。

【００４３】

本発明は、様々な形式のハードウェア、ソフトウェア、ファームウェア、特殊目的プロセッサ、又はその組み合わせで実装されてもよいことがわかる。一実施例では、本発明は、プログラム記憶装置に明白に具現されたアプリケーションプログラムとしてソフトウェアに実装され得る。アプリケーションプログラムは、何らかの適切なアーキテクチャを有する機械にアップロードされ、それにより実行されてもよい。

【００４４】

添付図面に示した構成システムの構成要素及び方法のステップのうちいくつかはソフトウェアに実装されてもよいため、システム構成要素（又は処理のステップ）の間の実際の接続は、本発明がプログラムされる方法に応じて異なってもよいことが更にわかる。ここに提示された本発明の教示により、当業者は本発明の前記及び類似の実装又は構成を検討

することができる。

【図面の簡単な説明】

【００４５】

【図１】本発明の例示的な実施例による電子装置と通信するシステムのブロック図

【図２】本発明で使用されるパーソナルコンピュータ（ＰＣ）のブロック図

【図３】本発明で使用されるビデオ表示装置の制御システムのブロック図

【図４】本発明の例示的な実施例によるビデオ表示装置と通信するシステムの動作を示したフローチャート

【図５】本発明の例示的な実施例によるビデオ表示装置の特性に応じてビデオ表示装置と通信するシステムの動作を示したフローチャート

【図１】

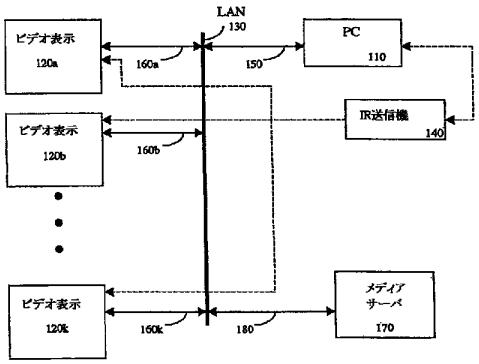

【図２】

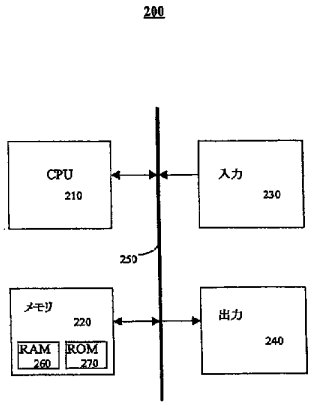

【図３】

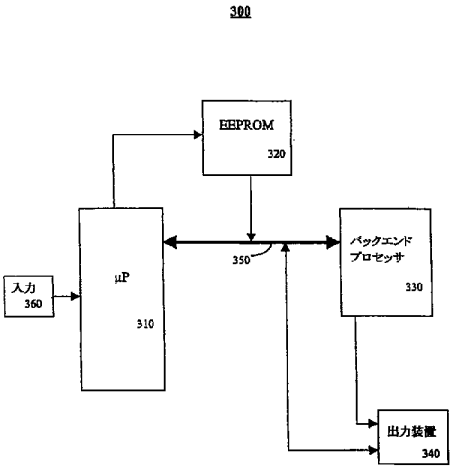
300
EEPROM
320
バックエンド
プロセッサ
330
350
入力
360
μP
310
出力装置
340

【図４】

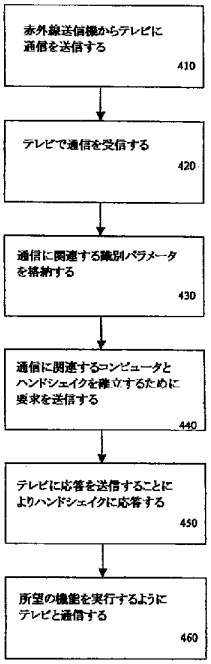
赤外線送信機からテレビに
通信を送信する
410
テレビで通信を受信する
420
通信に関連する識別パラメータ
を格納する
430
通信に関連するコンピュータと
ハンドシェイクを確立するために
要求を送信する
440
テレビに応答を送信することに
よりハンドシェイクに応答する
450
所望の機能を実行するように
テレビと通信する
460

【図５】

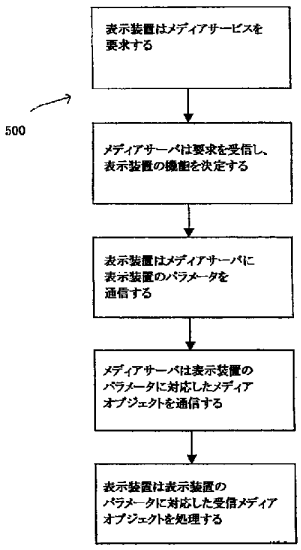
表示装置はメディアサービスを
要求する
500
メディアサーバは要求を受信し、
表示装置の機能を決定する
表示装置はメディアサーバに
表示装置のパラメータを
通信する
メディアサーバは表示装置の
パラメータに対応したメディア
オブジェクトを通信する
表示装置は表示装置の
パラメータに対応した受信メディア
オブジェクトを処理する

【手続補正書】
【提出日】平成17年12月15日(2005.12.15)
【手続補正１】
【補正対象書類名】特許請求の範囲
【補正対象項目名】全文
【補正方法】変更
【補正の内容】
【特許請求の範囲】
【請求項１】
メディアオブジェクトを作る方法であって、
表示装置で使用される表示技術に関連する表示パラメータを決定するステップと、
前記パラメータに応じて表示技術に対応するメディアオブジェクトを生成するステップと
を有する方法。
【請求項２】
請求項１に記載の方法であって、
前記表示パラメータは、前記表示パラメータに応じて前記メディアオブジェクトとして生成されたデータを返信するサーバに通信される方法。
【請求項３】
請求項１に記載の方法であって、
使用される表示技術を示す前記表示パラメータは、陰極線管、有機発光ダイオード、液晶ディスプレイ、シリコン上液晶、デジタル光プロジェクト及びプラズマのうち少なくとも１つである方法。
【請求項４】
請求項３に記載の方法であって、
前記メディアオブジェクトは、前記表示技術に適したフォーマットでエンコードされる方法。
【請求項５】
請求項４に記載の方法であって、
前記メディアオブジェクトは、前記表示技術用に変更された視覚属性を有し、
前記視覚属性は、前記メディアオブジェクトが異なる表示技術を使用した表示装置に表示されるときに変更される方法。
【請求項６】
請求項２に記載の方法であって、
前記メディアオブジェクトは、デジタルテレビ放送システムのサブチャネルで送信され、前記変更されたメディアオブジェクトは、異なるサブチャネルで送信される方法。
【請求項７】
メディアオブジェクトを送信する方法であって、
表示装置に使用される表示技術に関係する表示装置パラメータを決定し、前記パラメータは、メディアオブジェクトの要求の一部として受信されるステップと、
前記表示装置に前記メディアオブジェクトを送信し、前記メディアオブジェクトは、前記表示装置に使用される表示技術に対応するステップと、
を有する方法。
【請求項８】
請求項７に記載の方法であって、
使用される表示技術を示す前記パラメータは、陰極線管、有機発光ダイオード、液晶ディスプレイ、シリコン上液晶、デジタル光プロジェクト及びプラズマのうち少なくとも１つである方法。
【請求項９】
請求項８に記載の方法であって、

前記メディアオブジェクトは、表示技術に適したフォーマットでエンコードされる方法。

【請求項１０】

請求項９に記載の方法であって、

前記メディアオブジェクトは、前記表示技術用に変更された視覚属性を有し、

前記視覚属性は、前記メディアオブジェクトが異なる表示技術を使用した表示装置に表示されるときに変更される方法。

【請求項１１】

請求項１０に記載の方法であって、

前記メディアオブジェクトは、デジタルテレビ放送システムのサブチャネルで送信され、前記変更されたメディアオブジェクトは、異なるサブチャネルで送信される方法。

【国際調査報告】

INTERNATIONAL SEARCH REPORT

International Application No
PCT/US2004/013859

A. CLASSIFICATION OF SUBJECT MATTER
IPC 7 H04L12/28 H04B1/20 H04L29/06

According to International Patent Classification (IPC) or to both national classification and IPC

B. FIELDS SEARCHED

Minimum documentation searched (classification system followed by classification symbols)
IPC 7 H04L H04B

Documentation searched other than minimum documentation to the extent that such documents are included in the fields searched

Electronic data base consulted during the international search (name of data base and, where practical, search terms used)
EPO-Internal

C. DOCUMENTS CONSIDERED TO BE RELEVANT

Category *	Citation of document, with indication, where appropriate, of the relevant passages	Relevant to claim No.
A	WO 97/18636 A (MIZUNO YOSHIRO ; WEBTRONICS INC (US)) 22 May 1997 (1997-05-22) the whole document	1-34
X A	US 2003/043740 A1 (MARCH SEAN W ET AL) 6 March 2003 (2003-03-06) abstract; figures 3,8 paragraphs '0005!, '0006!, '0022!, '0028!, '0036! - '0091!, '0104!, '0106!	1-18,32, 33 19-31,34
X A	WO 97/40610 A (NORTHERN TELECOM LTD) 30 October 1997 (1997-10-30) page 5, line 18 - page 6, line 12	1-18,32, 33 19-31,34

-/--

[X] Further documents are listed in the continuation of box C.

[X] Patent family members are listed in annex.

* Special categories of cited documents :

'A' document defining the general state of the art which is not considered to be of particular relevance
'E' earlier document but published on or after the international filing date
'L' document which may throw doubts on priority claim(s) or which is cited to establish the publication date of another citation or other special reason (as specified)
'O' document referring to an oral disclosure, use, exhibition or other means
'P' document published prior to the international filing date but later than the priority date claimed

'T' later document published after the international filing date or priority date and not in conflict with the application but cited to understand the principle or theory underlying the invention
'X' document of particular relevance; the claimed invention cannot be considered novel or cannot be considered to involve an inventive step when the document is taken alone
'Y' document of particular relevance; the claimed invention cannot be considered to involve an inventive step when the document is combined with one or more other such documents, such combination being obvious to a person skilled in the art.
'&' document member of the same patent family

Date of the actual completion of the international search	Date of mailing of the international search report
2 February 2005	21 02 2005
Name and mailing address of the ISA European Patent Office, P.B. 5818 Patentlaan 2 NL - 2280 HV Rijswijk Tel. (+31-70) 340-2040, Tx. 31 651 epo nl, Fax: (+31-70) 340-3016	Authorized officer Lievens, K

Form PCT/ISA/210 (second sheet) (January 2004)

page 1 of 2

INTERNATIONAL SEARCH REPORT

International Application No
PCT/US2004/013859

C.(Continuation) DOCUMENTS CONSIDERED TO BE RELEVANT

Category *	Citation of document, with indication, where appropriate, of the relevant passages	Relevant to claim No.
X	US 5 109 222 A (WELTY JOHN) 28 April 1992 (1992-04-28) abstract; figure 5 column 2, line 30 - column 4, line 55	19-31
A		1-18, 32-34
A	WO 00/39772 A (KONINKL PHILIPS ELECTRONICS NV) 6 July 2000 (2000-07-06) the whole document	1-34
A	WO 00/16531 A (SONY ELECTRONICS INC) 23 March 2000 (2000-03-23) the whole document	1-34
X	US 2003/046691 A1 (NAKAGAWA TOSHIYUKI) 6 March 2003 (2003-03-06) abstract paragraph '0002! - paragraph '0023! paragraph '0045! - paragraph '0048!	35-38, 40-43
Y	paragraph '0080! - paragraph '0123!	39,44
X	WO 02/097584 A2 (HYPERSPACE COMMUNICATIONS, INC) 5 December 2002 (2002-12-05) abstract paragraph '0017! - paragraph '0023! paragraph '0026! - paragraph '0036! paragraph '0043! - paragraph '0046!	35-38, 40-43
X	EP 1 263 233 A (MATSUSHITA ELECTRIC INDUSTRIAL CO., LTD) 4 December 2002 (2002-12-04) abstract paragraph '0003! - paragraph '0011! paragraph '0041!	35-38, 40-43
Y	US 2002/120931 A1 (HUBER THOMAS ET AL) 29 August 2002 (2002-08-29) abstract paragraph '0006! - paragraph '0020! paragraph '0035! - paragraph '0047! paragraph '0054! figures 1,5	39,44

Form PCT/ISA/210 (continuation of second sheet) (January 2004)

INTERNATIONAL SEARCH REPORT

national application No.
PCT/US2004/013859

Box II Observations where certain claims were found unsearchable (Continuation of item 2 of first sheet)

This International Search Report has not been established in respect of certain claims under Article 17(2)(a) for the following reasons:

1. ☐ Claims Nos.:
because they relate to subject matter not required to be searched by this Authority, namely:

2. ☐ Claims Nos.:
because they relate to parts of the International Application that do not comply with the prescribed requirements to such an extent that no meaningful International Search can be carried out, specifically:

3. ☐ Claims Nos.:
because they are dependent claims and are not drafted in accordance with the second and third sentences of Rule 6.4(a).

Box III Observations where unity of invention is lacking (Continuation of item 3 of first sheet)

This International Searching Authority found multiple inventions in this international application, as follows:

see additional sheet

1. ☒ As all required additional search fees were timely paid by the applicant, this International Search Report covers all searchable claims.

2. ☐ As all searchable claims could be searched without effort justifying an additional fee, this Authority did not invite payment of any additional fee.

3. ☐ As only some of the required additional search fees were timely paid by the applicant, this International Search Report covers only those claims for which fees were paid, specifically claims Nos.:

4. ☐ No required additional search fees were timely paid by the applicant. Consequently, this International Search Report is restricted to the invention first mentioned in the claims; it is covered by claims Nos.:

Remark on Protest

☐ The additional search fees were accompanied by the applicant's protest.

☐ No protest accompanied the payment of additional search fees.

Form PCT/ISA/210 (continuation of first sheet (2)) (January 2004)

INTERNATIONAL SEARCH REPORT

International Application No. PCT/US2004 /013859

FURTHER INFORMATION CONTINUED FROM PCT/ISA/ 210

This International Searching Authority found multiple (groups of) inventions in this international application, as follows:

1. claims: 1-34

   Method and system for establish a communication

2. claims: 35-44

   Method for transmision of media objects based on the properties of a display device

INTERNATIONAL SEARCH REPORT

Information on patent family members

International Application No
PCT/US2004/013859

Patent document cited in search report		Publication date	Patent family member(s)			Publication date
WO 9718636	A	22-05-1997	AU	7706596	A	05-06-1997
			WO	9718636	A2	22-05-1997
US 2003043740	A1	06-03-2003	EP	1430682	A2	23-06-2004
			WO	02103982	A2	27-12-2002
WO 9740610	A	30-10-1997	AU	707905	B2	22-07-1999
			AU	2563297	A	12-11-1997
			CA	2248577	A1	30-10-1997
			WO	9740610	A2	30-10-1997
			CN	1216657	A	12-05-1999
			DE	69708281	D1	20-12-2001
			DE	69708281	T2	16-05-2002
			EP	0895684	A2	10-02-1999
			JP	11508753	T	27-07-1999
			KR	2000010612	A	25-02-2000
			US	6128298	A	03-10-2000
US 5109222	A	28-04-1992	NONE			
WO 0039772	A	06-07-2000	CN	1298530	T	06-06-2001
			WO	0039772	A1	06-07-2000
			EP	1058921	A1	13-12-2000
			JP	2002534038	T	08-10-2002
WO 0016531	A	23-03-2000	US	6237049	B1	22-05-2001
			AT	280463	T	15-11-2004
			AU	5579999	A	03-04-2000
			CA	2340902	A1	23-03-2000
			DE	69921342	D1	25-11-2004
			EP	1112650	A1	04-07-2001
			JP	2002525732	T	13-08-2002
			WO	0016531	A1	23-03-2000
US 2003046691	A1	06-03-2003	JP	2003153254	A	23-05-2003
WO 02097584	A2	05-12-2002	NONE			
EP 1263233	A	04-12-2002	CN	1389785	A	08-01-2003
			EP	1263233	A2	04-12-2002
			JP	2003091648	A	28-03-2003
			US	2002184223	A1	05-12-2002
US 2002120931	A1	29-08-2002	CA	2438620	A1	29-08-2002
			EP	1364533	A1	26-11-2003
			WO	02067587	A1	29-08-2002

Form PCT/ISA/210 (patent family annex) (January 2004)

フロントページの続き

(81)指定国 AP(BW,GH,GM,KE,LS,MW,MZ,NA,SD,SL,SZ,TZ,UG,ZM,ZW),EA(AM,AZ,BY,KG,KZ,MD,RU,TJ,TM),EP(AT,BE,BG,CH,CY,CZ,DE,DK,EE,ES,FI,FR,GB,GR,HU,IE,IT,LU,MC,NL,PL,PT,RO,SE,SI,SK,TR),OA(BF,BJ,CF,CG,CI,CM,GA,GN,GQ,GW,ML,MR,NE,SN,TD,TG),AE,AG,AL,AM,AT,AU,AZ,BA,BB,BG,BR,BW,BY,BZ,CA,CH,CN,CO,CR,CU,CZ,DE,DK,DM,DZ,EC,EE,EG,ES,FI,GB,GD,GE,GH,GM,HR,HU,ID,IL,IN,IS,JP,KE,KG,KP,KR,KZ,LC,LK,LR,LS,LT,LU,LV,MA,MD,MG,MK,MN,MW,MX,MZ,NA,NI,NO,NZ,OM,PG,PH,PL,PT,RO,RU,SC,SD,SE,SG,SK,SL,SY,TJ,TM,TN,TR,TT,TZ,UA,UG,US,UZ,VC,VN,YU,ZA,ZM,ZW

（特許庁注：以下のものは登録商標）
ＥＴＨＥＲＮＥＴ
Ｂｌｕｅｔｏｏｔｈ

(74)代理人 100135105
弁理士 渡邊 直満
(72)発明者 グライムス・ケヴィン・ロイド
アメリカ合衆国，インディアナ州 ４６０３８，フィッシャーズ，ハイドン・コート １２４２７
(72)発明者 バーネット・アンジェラ・レニー
アメリカ合衆国，インディアナ州 ４６２６８，インディアナポリス，ブレトン・ウッド・ドライヴ ６８２１
Ｆターム(参考) 5C164 UB41P UD01P UD61S YA21

Espacenet

Bibliographic data: JP2004356695 (A) - 2004-12-16

SYSTEM AND METHOD FOR DATA DISTRIBUTION AND DATA RECEIVING APPARATUS AND METHOD FOR DATA RECEIVING

Inventor(s): KASAHARA YOICHI + (KASAHARA YOICHI)

Applicant(s): SONY CORP + (SONY CORP)

Classification: **- international:** ***G06F13/00; H04N21/433; H04N21/442; H04N7/173;*** (IPC1-7): H04N7/173
- cooperative:

Application number: JP20030148697 20030527

Priority number (s): JP20030148697 20030527

Abstract of JP2004356695 (A)

PROBLEM TO BE SOLVED: To reproduce streaming data without generating underflow and overflow even in a small buffer, and to shorten a time for providing content at the time of operating a remote controller. ;SOLUTION: When a user controls a remote controller 39 for a content providing device 21, an IR code processor 37 receives a signal of the remote controller 39, and changes an overflow threshold from a normal threshold to an operation threshold smaller than the normal threshold. When judging that the amount of data streaming in a buffer 51 exceeds the operation threshold, a reproduction speed control unit 52 controls a decoder 53 and a reproduction control unit 54 to speed the reproduction processing. ;COPYRIGHT: (C) 2005,JPO&NCIPI

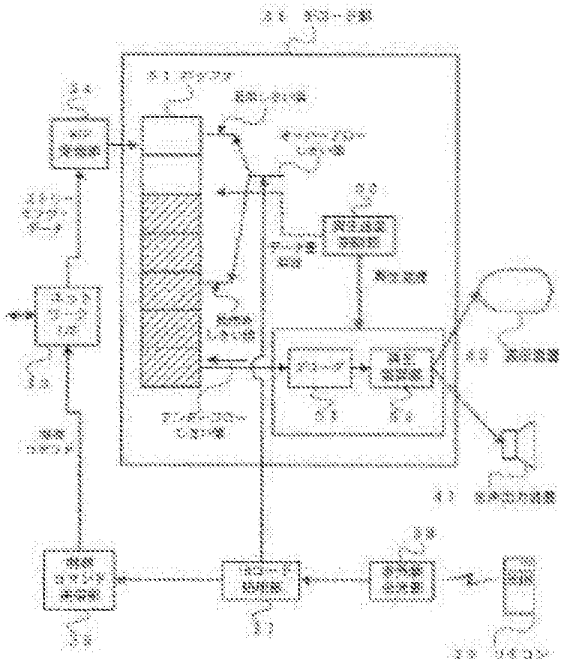

(19)日本国特許庁(JP)　(12)公開特許公報(A)　(11)特許出願公開番号
特開2004-356695
(P2004-356695A)
(43)公開日　平成16年12月16日(2004.12.16)

(51)Int.Cl.⁷	F I			テーマコード（参考）
H04N 7/173	H04N	7/173	610Z	5C064
	H04N	7/173	630	

審査請求 未請求　請求項の数 28　ＯＬ　（全 23 頁）

(21)出願番号　特願2003-148697(P2003-148697)
(22)出願日　平成15年5月27日(2003.5.27)

(71)出願人　000002185
ソニー株式会社
東京都品川区北品川６丁目７番３５号
(74)代理人　100082762
弁理士　杉浦　正知
(74)代理人　100120640
弁理士　森　幸一
(72)発明者　笠原　洋一
東京都品川区北品川６丁目７番３５号　ソニー株式会社内

Ｆターム(参考)　5C064 BA01 BB05 BC16 BC23 BD02 BD08 BD09

(54)【発明の名称】データ配信システムおよびデータ配信方法、ならびにデータ受信装置およびデータ受信方法

(57)【要約】
【課題】小さなバッファでもアンダーフロー、およびオーバーフローを発生させずにストリーミング・データを再生するとともに、リモコン操作時のコンテンツ提供に係る遅延時間を短縮する。
【解決手段】ユーザが、コンテンツ提供装置２１に対してリモコン３９の操作をした場合に、ＩＲコード処理部３７が上記リモコン３９の信号を受信し、オーバーフローしきい値を通常しきい値から、通常しきい値より小さい操作時しきい値に変更する。再生速度制御部５２は、バッファ５１内のストリーミング・データの量が、上記操作時しきい値を越えたと判断した場合に、デコーダ５３および再生制御部５４に対して再生処理を速くするよう制御し、これによって、リモコン操作時に、コンテンツがコンテンツ提供装置２１から提供されてから表示装置４０等に出力されるまでの時間を短縮する。
【選択図】　図５

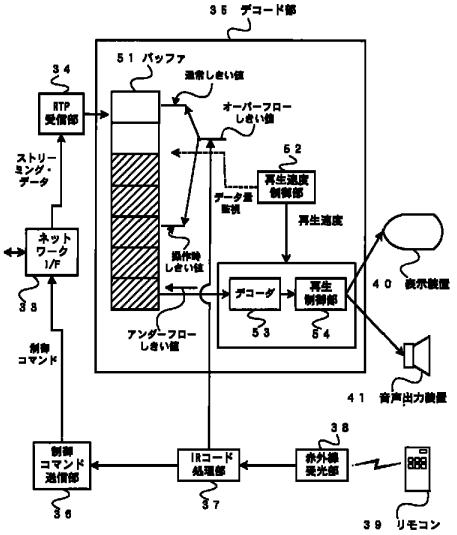

【特許請求の範囲】
【請求項１】
映像データを含むコンテンツを出力するコンテンツ提供装置と、
前記コンテンツを必要に応じてエンコードし、ストリーミング・データとしてネットワーク上に送信する送信装置と、
前記ストリーミング・データを、前記ネットワークを介して受信する受信装置とを有し、
前記受信装置は、前記受信されたストリーミング・データをデコード処理がされるまで記憶するバッファ手段と、
前記バッファ手段内の前記ストリーミング・データに前記デコード処理を施すとともに、デコード出力の再生速度を制御可能なデコード手段と、
前記バッファ手段内に記憶されているストリーミング・データのデータ量を所定のタイミングで取得し、前記データ量が第１のしきい値以下である場合は、前記デコード手段が通常の速度で前記ストリーミング・データの再生を行うよう制御し、
前記データ量が第１のしきい値を上回った場合は、前記デコード手段が前記通常の速度より速い速度で前記ストリーミング・データの再生を行うよう制御する再生速度制御手段とを備えることを特徴とするデータ配信システム。
【請求項２】
映像データを含むコンテンツを出力するコンテンツ提供装置と、
前記コンテンツを必要に応じてエンコードし、ストリーミング・データとしてネットワーク上に送信する送信装置と、
前記ストリーミング・データを、前記ネットワークを介して受信する受信装置とを有し、
前記受信装置は、前記受信されたストリーミング・データをデコード処理がされるまで記憶するバッファ手段と、
前記バッファ手段内の前記ストリーミング・データに前記デコード処理を施すとともに、デコード出力の再生速度を制御可能なデコード手段と、
前記バッファ手段内に記憶されているストリーミング・データのデータ量を所定のタイミングで取得し、前記データ量が第２のしきい値以上である場合は、前記デコード手段が通常の速度で前記ストリーミング・データの再生を行うよう制御し、
前記データ量が前記第２のしきい値を下回った場合は、前記デコード手段が前記通常の速度より低い速度で前記ストリーミング・データの再生を行うよう制御する再生速度制御手段とを備えることを特徴とするデータ配信システム。
【請求項３】
映像データを含むコンテンツを出力するコンテンツ提供装置と、
前記コンテンツを必要に応じてエンコードし、ストリーミング・データとしてネットワーク上に送信する送信装置と、
前記ストリーミング・データを、前記ネットワークを介して受信する受信装置とを有し、
前記受信装置は、前記受信されたストリーミング・データをデコード処理がされるまで記憶するバッファ手段と、
前記バッファ手段内の前記ストリーミング・データに前記デコード処理を施すとともに、デコード出力の再生速度を制御可能なデコード手段と、
前記バッファ手段内に記憶されているストリーミング・データのデータ量を所定のタイミングで取得し、前記データ量が第１のしきい値と前記第１のしきい値より小さい第２のしきい値の間である場合は、前記デコード手段が通常の速度で前記ストリーミング・データの再生を行うよう制御し、
前記データ量が第１のしきい値を上回った場合は、前記デコード手段が前記通常の速度より速い速度で前記ストリーミング・データの再生を行うよう制御し、前記データ量が第２のしきい値を下回った場合は、前記デコード手段が前記通常の速度より低い速度で前記ストリーミング・データの再生を行うよう制御する再生速度制御手段とを備えることを特徴とするデータ配信システム。
【請求項４】

請求項１，２または３に記載のデータ配信システムにおいて、
前記受信装置は、前記コンテンツ提供装置を制御するための制御信号を出力する信号入力装置からの前記制御信号を受信する信号処理手段を更に有し、
前記制御信号が、前記信号処理手段から、前記ネットワークおよび前記送信装置を介して前記コンテンツ提供装置に送信され、
前記信号処理手段が、前記制御信号を受信した場合に、前記第１のしきい値を、前記第１のしきい値より小さい所定の値に変更することを特徴とするデータ配信システム。
【請求項５】
請求項４に記載のデータ配信システムにおいて、
前記信号処理手段は、前記制御信号を一定期間受信しない場合は、前記変更された第１のしきい値を、元の第１のしきい値に戻すことを特徴とするデータ配信システム。
【請求項６】
請求項１，２または３に記載のデータ配信システムにおいて、
前記デコード手段によりデコードされたストリーミング・データを受信し、前記映像データを表示する表示装置を更に有することを特徴とするデータ配信システム。
【請求項７】
請求項１，２または３に記載のデータ配信システムにおいて、
前記デコード手段は、前記再生速度制御手段から再生処理の速度を変更するよう制御された場合に、前記映像データから所定のフィールドまたはフレームを除去することにより、または前記映像データに所定のフィールドまたはフレームを挿入することによって再生速度を変更することを特徴とするデータ配信システム。
【請求項８】
映像データを含むコンテンツを出力するコンテンツ提供ステップと、
前記コンテンツを必要に応じてエンコードし、ストリーミング・データとしてネットワーク上に送信する送信ステップと、
前記ストリーミング・データを前記ネットワークを介して受信し、前記ストリーミング・データをデコード処理がされるまでバッファ手段に記憶する記憶ステップと、
前記バッファ手段内の前記ストリーミング・データに前記デコード処理を施すとともに、デコード出力の再生速度を制御可能なデコードステップと、
前記バッファ手段内に記憶されているストリーミング・データのデータ量を所定のタイミングで取得し、前記データ量が第１のしきい値以下である場合は、前記デコードステップが通常の速度で前記ストリーミング・データの再生を行うよう制御し、
前記データ量が第１のしきい値を上回った場合は、前記デコードステップが前記通常の速度より速い速度で前記ストリーミング・データの再生を行うよう制御する再生速度制御ステップとを有することを特徴とするデータ配信方法。
【請求項９】
映像データを含むコンテンツを出力するコンテンツ提供ステップと、
前記コンテンツを必要に応じてエンコードし、ストリーミング・データとしてネットワーク上に送信する送信ステップと、
前記ストリーミング・データを前記ネットワークを介して受信し、前記ストリーミング・データをデコード処理がされるまでバッファ手段に記憶する記憶ステップと、
前記バッファ手段内の前記ストリーミング・データに前記デコード処理を施すとともに、デコード出力の再生速度を制御可能なデコードステップと、
前記バッファ手段内に記憶されているストリーミング・データのデータ量を所定のタイミングで取得し、前記データ量が第２のしきい値以上である場合は、前記デコードステップが通常の速度で前記ストリーミング・データの再生を行うよう制御し、
前記データ量が前記第２のしきい値を下回った場合は、前記デコードステップが前記通常の速度より低い速度で前記ストリーミング・データの再生を行うよう制御する再生速度制御ステップとを有することを特徴とするデータ配信方法。
【請求項１０】

映像データを含むコンテンツを出力するコンテンツ提供ステップと、
前記コンテンツを必要に応じてエンコードし、ストリーミング・データとしてネットワーク上に送信する送信ステップと、
前記ストリーミング・データを前記ネットワークを介して受信し、前記ストリーミング・データをデコード処理がされるまでバッファ手段に記憶する記憶ステップと、
前記バッファ手段内の前記ストリーミング・データに前記デコード処理を施すとともに、デコード出力の再生速度を制御可能なデコードステップと、
前記バッファ手段内に記憶されているストリーミング・データのデータ量を所定のタイミングで取得し、前記データ量が第１のしきい値と前記第１のしきい値より小さい第２のしきい値の間である場合は、前記デコードステップが通常の速度で前記ストリーミング・データの再生を行うよう制御し、
前記データ量が第１のしきい値を上回った場合は、前記デコードステップが前記通常の速度より速い速度で前記ストリーミング・データの再生を行うよう制御し、
前記データ量が前記第２のしきい値を下回った場合は、前記デコードステップが前記通常の速度より低い速度で前記ストリーミング・データの再生を行うよう制御する再生速度制御ステップとを有することを特徴とするデータ配信方法。
【請求項１１】
請求項８，９または１０に記載のデータ配信方法において、
前記映像データを含むコンテンツからなるストリーミング・データの提供を制御するための制御信号を受信する信号処理ステップを更に有し、
前記信号処理ステップが、前記制御信号を受信した場合に、前記第１のしきい値を、前記第１のしきい値より小さい所定の値に変更することを特徴とするデータ配信方法。
【請求項１２】
請求項１１に記載のデータ配信方法において、
前記信号処理ステップは、前記制御信号を一定期間受信しない場合は、前記変更された第１のしきい値を、元の第１のしきい値に戻すことを特徴とするデータ配信方法。
【請求項１３】
請求項８，９または１０に記載のデータ配信方法において、
前記デコードステップによりデコードされたストリーミング・データを受信し、前記映像データを表示する表示ステップを更に有することを特徴とするデータ配信方法。
【請求項１４】
請求項８，９または１０に記載のデータ配信方法において、
前記デコードステップは、前記再生速度制御ステップにより再生処理の速度を変更するよう制御された場合に、前記映像データから所定のフィールドまたはフレームを除去することにより、または前記映像データに所定のフィールドまたはフレームを挿入することによって再生速度を変更することを特徴とするデータ配信方法。
【請求項１５】
映像データを含むコンテンツからなるストリーミング・データを受信し、前記ストリーミング・データを、デコード処理がされるまで記憶するバッファ手段と、
前記バッファ手段内の前記ストリーミング・データに前記デコード処理を施すとともに、デコード出力の再生速度を制御可能なデコード手段と、
前記バッファ手段内に記憶されているストリーミング・データのデータ量を所定のタイミングで取得し、前記データ量が第１のしきい値以下である場合は、前記デコード手段が通常の速度で前記ストリーミング・データの再生を行うよう制御し、
前記データ量が第１のしきい値を上回った場合は、前記デコード手段が前記通常の速度より速い速度で前記ストリーミング・データの再生を行うよう制御する再生速度制御手段とを有することを特徴とするデータ受信装置。
【請求項１６】
映像データを含むコンテンツからなるストリーミング・データを受信し、前記ストリーミング・データを、デコード処理がされるまで記憶するバッファ手段と、

前記バッファ手段内の前記ストリーミング・データに前記デコード処理を施すとともに、デコード出力の再生速度を制御可能なデコード手段と、
前記バッファ手段内に記憶されているストリーミング・データのデータ量を所定のタイミングで取得し、前記データ量が第２のしきい値以上である場合は、前記デコード手段が通常の速度で前記ストリーミング・データの再生を行うよう制御し、
前記データ量が第２のしきい値を下回った場合は、前記デコード手段が前記通常の速度より低い速度で前記ストリーミング・データの再生を行うよう制御する再生速度制御手段とを有することを特徴とするデータ受信装置。

【請求項１７】

映像データを含むコンテンツからなるストリーミング・データを受信し、前記ストリーミング・データを、デコード処理がされるまで記憶するバッファ手段と、
前記バッファ手段内の前記ストリーミング・データに前記デコード処理を施すとともに、デコード出力の再生速度を制御可能なデコード手段と、
前記バッファ手段内に記憶されているストリーミング・データのデータ量を所定のタイミングで取得し、前記データ量が第１のしきい値と前記第１のしきい値より小さい第２のしきい値の間である場合は、前記デコード手段が通常の速度で前記ストリーミング・データの再生を行うよう制御し、
前記データ量が第１のしきい値を上回った場合は、前記デコード手段が前記通常の速度より速い速度で前記ストリーミング・データの再生を行うよう制御し、
前記データ量が前記第２のしきい値を下回った場合は、前記デコード手段が前記通常の速度より低い速度で前記ストリーミング・データの再生を行うよう制御する再生速度制御手段とを有することを特徴とするデータ受信装置。

【請求項１８】

請求項１５，１６または１７に記載のデータ受信装置において、
前記映像データを含むコンテンツからなるストリーミング・データの提供を制御するための制御信号を受信する信号処理手段を更に有し、
前記信号処理手段が、前記制御信号を受信した場合に、前記第１のしきい値を、前記第１のしきい値より小さい所定の値に変更することを特徴とするデータ受信装置。

【請求項１９】

請求項１８に記載のデータ受信装置において、
前記信号処理手段は、前記制御信号を一定期間受信しない場合は、前記変更された第１のしきい値を、元の第１のしきい値に戻すことを特徴とするデータ受信装置。

【請求項２０】

請求項１５，１６または１７に記載のデータ受信装置において、
前記デコード手段によりデコードされた前記ストリーミング・データを受信し、前記映像データを表示する表示手段を更に有することを特徴とするデータ受信装置。

【請求項２１】

請求項１５，１６または１７に記載のデータ受信装置において、
前記デコード手段は、前記再生速度制御手段から再生処理の速度を変更するよう制御された場合に、前記映像データから所定のフィールドまたはフレームを除去することにより、または前記映像データに所定のフィールドまたはフレームを挿入することによって再生速度を変更することを特徴とするデータ受信装置。

【請求項２２】

映像データを含むコンテンツからなるストリーミング・データを受信し、前記ストリーミング・データを、デコード処理がされるまでバッファ手段に記憶する記憶ステップと、
前記バッファ手段内の前記ストリーミング・データに前記デコード処理を施すとともに、デコード出力の再生速度を制御可能なデコードステップと、
前記バッファ手段内に記憶されているストリーミング・データのデータ量を所定のタイミングで取得し、前記データ量が第１のしきい値以下である場合は、前記デコードステップが通常の速度で前記ストリーミング・データの再生を行うよう制御し、

前記データ量が第１のしきい値を上回った場合は、前記デコードステップが前記通常の速度より速い速度で前記ストリーミング・データの再生を行うよう制御する再生速度制御ステップとを有することを特徴とするデータ受信方法。

【請求項２３】

映像データを含むコンテンツからなるストリーミング・データを受信し、前記ストリーミング・データを、デコード処理がされるまでバッファ手段に記憶する記憶ステップと、

前記バッファ手段内の前記ストリーミング・データに前記デコード処理を施すとともに、デコード出力の再生速度を制御可能なデコードステップと、

前記バッファ手段内に記憶されているストリーミング・データのデータ量を所定のタイミングで取得し、前記データ量が第２のしきい値以上である場合は、前記デコードステップが通常の速度で前記ストリーミング・データの再生を行うよう制御し、

前記データ量が前記第２のしきい値を下回った場合は、前記デコードステップが前記通常の速度より低い速度で前記ストリーミング・データの再生を行うよう制御する再生速度制御ステップとを有することを特徴とするデータ受信方法。

【請求項２４】

映像データを含むコンテンツからなるストリーミング・データを受信し、前記ストリーミング・データを、デコード処理がされるまでバッファ手段に記憶する記憶ステップと、

前記バッファ手段内の前記ストリーミング・データに前記デコード処理を施すとともに、デコード出力の再生速度を制御可能なデコードステップと、

前記バッファ手段内に記憶されているストリーミング・データのデータ量を所定のタイミングで取得し、前記データ量が第１のしきい値と前記第１のしきい値より小さい第２のしきい値の間である場合は、前記デコードステップが通常の速度で前記ストリーミング・データの再生を行うよう制御し、

前記データ量が第１のしきい値を上回った場合は、前記デコードステップが前記通常の速度より速い速度で前記ストリーミング・データの再生を行うよう制御し、

前記データ量が前記第２のしきい値を下回った場合は、前記デコードステップが前記通常の速度より低い速度で前記ストリーミング・データの再生を行うよう制御する再生速度制御ステップとを有することを特徴とするデータ受信方法。

【請求項２５】

請求項２２，２３または２４に記載のデータ受信方法において、

前記映像データを含むコンテンツからなるストリーミング・データの提供を制御するための制御信号を受信する信号処理ステップを更に有し、

前記信号処理ステップが、前記制御信号を受信した場合に、前記第１のしきい値を、前記第１のしきい値より小さい所定の値に変更することを特徴とするデータ受信方法。

【請求項２６】

請求項２５に記載のデータ受信方法において、

前記信号処理ステップは、前記制御信号を一定期間受信しない場合は、前記変更された第１のしきい値を、元の第１のしきい値に戻すことを特徴とするデータ受信方法。

【請求項２７】

請求項２２，２３または２４に記載のデータ受信方法において、

前記デコードステップによりデコードされた前記ストリーミング・データを受信し、前記映像データを表示する表示ステップを更に有することを特徴とするデータ受信方法。

【請求項２８】

請求項２２，２３または２４に記載のデータ受信方法において、

前記デコードステップは、前記再生速度制御ステップにより再生処理の速度を変更するよう制御された場合に、前記映像データから所定のフィールドまたはフレームを除去することにより、または前記映像データに所定のフィールドまたはフレームを挿入することによって再生速度を変更することを特徴とするデータ受信方法。

【発明の詳細な説明】

【０００１】

【発明の属する技術分野】
この発明は、映像・音声データを、ネットワークを介して配信するデータ配信システムおよび方法、ならびに映像・音声データを、ネットワークを介して受信するデータ受信装置およびデータ受信方法に関する。
【０００２】
【従来の技術】
ここ数年の間で、ＤＶＤ（Ｄｉｇｉｔａｌ　Ｖｅｒｓａｔｉｌｅ　Ｄｉｓｋ）の利用が広く浸透してきており、映画や音楽のコンテンツを記録したＤＶＤも多く販売されるようになってきた。またディジタルハイビジョン放送も開始され、各家庭には、今までにない高画質、高音質なコンテンツが多く提供されるようになってきている。これらのメディアの普及に伴って、ＤＶＤを再生するＤＶＤ再生装置、ディジタルハイビジョン放送を受信、表示するディジタルテレビジョン受信装置、およびディジタルハイビジョン放送等を録画して随時再生することができるホームビデオサーバといったコンテンツを提供する装置が次々と商品化され店頭に並んでいる。
【０００３】
また、これらの装置は、ユーザのリモコン等の操作に応じて所定の動作をする。例えば、ＤＶＤ再生装置は、映画のＤＶＤの再生に際して、ユーザのリモコン操作に応じて特定のチャプターを選択して再生することができる。また、ディジタルテレビジョン受信装置は、ユーザのリモコン操作に応じて、データ放送のプログラムによる双方向サービスを提供することができる。
【０００４】
このような状況の中、高画質かつ高音質な映画やテレビジョン放送の番組を、より容易に家庭内で楽しむことができる「ホームネットワーク」が世間の注目を集め、これを実現するシステムも市販され始めている。このシステムの特徴の１つは、ＤＶＤ再生装置やハードディスクドライブ等のコンテンツ提供装置からの映像・音声データが、ネットワークを介して伝送され、異なる部屋にあるテレビジョンモニタおよびスピーカ等で再生されることである。
【０００５】
コンテンツ提供装置から映像・音声データを受け取った送信装置は、そのデータを圧縮符号化して、例えば、家庭内ＬＡＮ（Ｌｏｃａｌ　Ａｒｅａ　Ｎｅｔｗｏｒｋ）等のネットワークに送信する。圧縮符号化されたデータをネットワークを介して受信する受信装置は、このデータをデコードしてテレビジョンモニタやスピーカに出力する。ここで利用される家庭内ＬＡＮは、例えば、１００ＢＡＳＥ－ＴＸのネットワーク接続を使用したイーサネット（登録商標）ＬＡＮや、ＩＥＥＥ８０２・１１ｂ、ＩＥＥＥ８０２・１１ｇといった規格に従う無線ＬＡＮ等である。
【０００６】
また、このシステムでは、高画質、高音質を実現するために大きなサイズとなっている映像・音声データを含むストリーミング・データを、上記ＬＡＮのような比較的帯域の狭いネットワークを利用して送信すること、および高データレートで当該ストリーミング・データを転送すると、送信装置および受信装置それぞれのＣＰＵ負荷を増大させてしまうこと等の理由により、当該ストリーミング・データを、例えば、ＭＰＥＧ－２（Ｍｏｖｉｎｇ　Ｐｉｃｔｕｒｅ　Ｅｘｐｅｒｔｓ　Ｇｒｏｕｐ－２）等の圧縮技術で圧縮する方法が用いられている。すなわち、送信装置側でそのストリーミング・データをＭＰＥＧ－２形式にエンコードし、受信装置側では、その圧縮されたストリーミング・データをデコードし、出力する。
【０００７】
このようなシステムにおいては、通常時のストリーミング・データの再生が滑らかに行われることが重要であるため、上記ストリーミング・データをデコードする受信装置内のデコーダの前段にストリーミング・データ受信用の大容量バッファが設けられる。このバッファ容量は、ネットワーク伝送遅延や、送信装置および受信装置の処理能力等を考慮して

、ある程度の余裕を持つように定められる。バッファ容量が小さいと、送信装置からのストリーミング・データの転送が遅延した場合に、デコーダが処理すべきデータがすぐになくなって、所定のタイミングで出力すべき映像および音声を提供することができず、結果的に滑らかなストリーミング・データの再生が行えないことになる。

【０００８】

こうしたストリーミング・データの遅延の原因として代表的なものは、ネットワークの帯域幅が減少することである。同一のネットワーク上で、他の送信装置から他のストリーミング・データが送出されたり、他の受信装置に同一のストリーミング・データが送出されたりすると、利用可能なネットワークの帯域幅が急激に減少する。また、無線ＬＡＮ利用時には、間に障害物が入ったり、他の機器と混信したりすることによって通信速度が低下する。

【０００９】

また、ストリーミング・データの転送プロトコルには、パケットロス対策や伝送時間の保証を行わない、例えば、ＲＴＰ（Ｒｅａｌ－ｔｉｍｅ　Ｔｒａｎｓｐｏｒｔ　Ｐｒｏｔｏｃｏｌ）のようなプロトコルが利用される。ストリーミング・データの再生においては、１フレームの映像データの到着を待つことによってストリーミング再生が遅れるよりも、その１フレームの映像・音声データが欠落する方が好ましい。その方が、ユーザにとっては自然なストリーム再生と感じられるからである。

【００１０】

同様のシステムとして、コンテンツ再生方法および装置が提案されている（特許文献１）。この方法および装置では、コンテンツの再生中に、シーン記述情報に基づいて後続のコンテンツデータの先行取得が行われる。

【００１１】

【特許文献１】

特開２００２－２６８９９９号公報

【００１２】

【発明が解決しようとする課題】

しかしながら、上述した大容量バッファを使用すると、コンテンツ提供装置によってコンテンツ（映像・音声データ）が送信されてから、その映像・音声データがユーザに視聴可能となるまでの時間（遅延時間）が長くなってしまう。これにより、例えば、ネットワーク上に障害が発生した後でコンテンツの再生が再開されるときに安定再生状態に復帰するのに長い時間がかかることになる。

【００１３】

また、このような遅延時間の長さは、ユーザがリモコン等を操作してコンテンツ提供装置に指示を送っても、その指示が表示に反映されるのに非常に長い時間がかかり、リモコン操作におけるリアルタイム性を損なうことになる。

【００１４】

例えば、ＤＶＤに記録された映画のストリーミング・データが、ＤＶＤ再生装置（コンテンツ提供装置）から、送信装置、ネットワーク、および受信装置を介してテレビジョンモニタ等に出力されているときに、ユーザが映画の言語を変更したり、視聴チャプターの変更をしたりするためにメニューを表示するように指示をした場合、そのＤＶＤ再生装置は、ユーザの指示を受け取るとすぐに対応するメニューの映像データを受信装置に向けて送信する。

【００１５】

しかしながら、バッファには、依然として映画のシーンに対応する残りのストリーミング・データが格納されているので、上記メニューの表示は、それらのシーンが全て表示された後でテレビジョンモニタに表示される。従って、ユーザは、ＤＶＤ再生装置に指示をしてから、その指示結果を見るまで非常に長い間待つ必要がある。特に、階層化された複数のメニューを表示させて、順次リモコンで指示をしていくような場合は、それぞれのメニュー表示に長い間待がかかるので、最終的な指示を行うまでに膨大な時間を要する。また

、このような遅延によって、ユーザがリモコン操作を誤る確率も増大する。

【００１６】

また、ユーザが、テレビジョンモニタ等の表示装置に表示されている映像等を観てリモコンを操作しても、そのリモコンの指示を受け取ったコンテンツ提供装置は、全く異なる先行する映像を提供しているので、その指示を受け付けることができない場合もある。

【００１７】

また更に、コンテンツ提供装置がＤＶＤ再生装置やビデオテープレコーダである場合には、リモコンによる再生や停止等の指示が、上述した遅延時間のためにユーザの期待する位置で行われないという問題もある。

【００１８】

従って、この発明の目的は、ＤＶＤ再生装置などのコンテンツ提供装置からコンテンツ（映像・音声データ）を配信する際に、小さなサイズのバッファを用いても、バッファ内にストリーミング・データが存在しない状態（アンダーフロー）や、バッファがストリーミング・データで一杯になる状態（オーバーフロー）の発生を抑止し、滑らかなストリーミング・データの再生を維持するように、上記ストリーミング・データのデコード処理の速度を調整するデータ配信システムおよび方法、ならびにデータ受信装置および方法を提供することにある。

【００１９】

また、この発明の更なる目的は、ユーザがコンテンツ提供装置に対してリモコンの操作をした場合に、バッファ内のストリーミング・データの量を判定するしきい値を動的に変更することによって、そのコンテンツがコンテンツ提供装置より配信されてから表示装置に表示されるまでの時間を短縮するように制御するデータ配信システムおよび方法、ならびにデータ受信装置および方法を提供することにある。

【００２０】

【課題を解決するための手段】

請求項１の発明は、映像データを含むコンテンツを出力するコンテンツ提供装置と、コンテンツを必要に応じてエンコードし、ストリーミング・データとしてネットワーク上に送信する送信装置と、ストリーミング・データを、ネットワークを介して受信する受信装置とを有し、受信装置は、受信されたストリーミング・データをデコード処理がされるまで記憶するバッファ手段と、バッファ手段内のストリーミング・データにデコード処理を施すとともに、デコード出力の再生速度を制御可能なデコード手段と、バッファ手段内に記憶されているストリーミング・データのデータ量を所定のタイミングで取得し、データ量が第１のしきい値以下である場合は、デコード手段が通常の速度でストリーミング・データの再生を行うよう制御し、データ量が第１のしきい値を上回った場合は、デコード手段が通常の速度より速い速度でストリーミング・データの再生を行うよう制御する再生速度制御手段とを備えることを特徴とするデータ配信システムである。

【００２１】

請求項２の発明は、映像データを含むコンテンツを出力するコンテンツ提供装置と、コンテンツを必要に応じてエンコードし、ストリーミング・データとしてネットワーク上に送信する送信装置と、ストリーミング・データを、ネットワークを介して受信する受信装置とを有し、受信装置は、受信されたストリーミング・データをデコード処理がされるまで記憶するバッファ手段と、バッファ手段内のストリーミング・データにデコード処理を施すとともに、デコード出力の再生速度を制御可能なデコード手段と、バッファ手段内に記憶されているストリーミング・データのデータ量を所定のタイミングで取得し、データ量が第２のしきい値以上である場合は、デコード手段が通常の速度でストリーミング・データの再生を行うよう制御し、データ量が第２のしきい値を下回った場合は、デコード手段が通常の速度より低い速度でストリーミング・データの再生を行うよう制御する再生速度制御手段とを備えることを特徴とするデータ配信システムである。

【００２２】

請求項３の発明は、映像データを含むコンテンツを出力するコンテンツ提供装置と、コン

テンツを必要に応じてエンコードし、ストリーミング・データとしてネットワーク上に送信する送信装置と、ストリーミング・データを、ネットワークを介して受信する受信装置とを有し、受信装置は、受信されたストリーミング・データをデコード処理がされるまで記憶するバッファ手段と、バッファ手段内のストリーミング・データにデコード処理を施すとともに、デコード出力の再生速度を制御可能なデコード手段と、バッファ手段内に記憶されているストリーミング・データのデータ量を所定のタイミングで取得し、データ量が第１のしきい値と第１のしきい値より小さい第２のしきい値の間である場合は、デコード手段が通常の速度でストリーミング・データの再生を行うよう制御し、データ量が第１のしきい値を上回った場合は、デコード手段が通常の速度より速い速度でストリーミング・データの再生を行うよう制御し、データ量が第２のしきい値を下回った場合は、デコード手段が通常の速度より低い速度でストリーミング・データの再生を行うよう制御する再生速度制御手段とを備えることを特徴とするデータ配信システムである。

【００２３】

請求項８の発明は、映像データを含むコンテンツを出力するコンテンツ提供ステップと、コンテンツを必要に応じてエンコードし、ストリーミング・データとしてネットワーク上に送信する送信ステップと、ストリーミング・データをネットワークを介して受信し、ストリーミング・データをデコード処理がされるまでバッファ手段に記憶する記憶ステップと、バッファ手段内のストリーミング・データにデコード処理を施すとともに、デコード出力の再生速度を制御可能なデコードステップと、バッファ手段内に記憶されているストリーミング・データのデータ量を所定のタイミングで取得し、データ量が第１のしきい値以下である場合は、デコードステップが通常の速度でストリーミング・データの再生を行うよう制御し、データ量が第１のしきい値を上回った場合は、デコードステップが通常の速度より速い速度でストリーミング・データの再生を行うよう制御する再生速度制御ステップとを有することを特徴とするデータ配信方法である。

【００２４】

請求項９の発明は、映像データを含むコンテンツを出力するコンテンツ提供ステップと、コンテンツを必要に応じてエンコードし、ストリーミング・データとしてネットワーク上に送信する送信ステップと、ストリーミング・データをネットワークを介して受信し、ストリーミング・データをデコード処理がされるまでバッファ手段に記憶する記憶ステップと、バッファ手段内のストリーミング・データにデコード処理を施すとともに、デコード出力の再生速度を制御可能なデコードステップと、バッファ手段内に記憶されているストリーミング・データのデータ量を所定のタイミングで取得し、データ量が第２のしきい値以上である場合は、デコードステップが通常の速度でストリーミング・データの再生を行うよう制御し、データ量が第２のしきい値を下回った場合は、デコードステップが通常の速度より低い速度でストリーミング・データの再生を行うよう制御する再生速度制御ステップとを有することを特徴とするデータ配信方法である。

【００２５】

請求項１０の発明は、映像データを含むコンテンツを出力するコンテンツ提供ステップと、コンテンツを必要に応じてエンコードし、ストリーミング・データとしてネットワーク上に送信する送信ステップと、ストリーミング・データをネットワークを介して受信し、ストリーミング・データをデコード処理がされるまでバッファ手段に記憶する記憶ステップと、バッファ手段内のストリーミング・データにデコード処理を施すとともに、デコード出力の再生速度を制御可能なデコードステップと、バッファ手段内に記憶されているストリーミング・データのデータ量を所定のタイミングで取得し、データ量が第１のしきい値と第１のしきい値より小さい第２のしきい値の間である場合は、デコードステップが通常の速度でストリーミング・データの再生を行うよう制御し、データ量が第１のしきい値を上回った場合は、デコードステップが通常の速度より速い速度でストリーミング・データの再生を行うよう制御し、データ量が第２のしきい値を下回った場合は、デコードステップが通常の速度より低い速度でストリーミング・データの再生を行うよう制御する再生速度制御ステップとを有することを特徴とするデータ配信方法である。

【００２６】
請求項１５の発明は、映像データを含むコンテンツからなるストリーミング・データを受信し、ストリーミング・データを、デコード処理がされるまで記憶するバッファ手段と、バッファ手段内のストリーミング・データにデコード処理を施すとともに、デコード出力の再生速度を制御可能なデコード手段と、バッファ手段内に記憶されているストリーミング・データのデータ量を所定のタイミングで取得し、データ量が第１のしきい値以下である場合は、デコード手段が通常の速度でストリーミング・データの再生を行うよう制御し、データ量が第１のしきい値を上回った場合は、デコード手段が通常の速度より速い速度でストリーミング・データの再生を行うよう制御する再生速度制御手段とを有することを特徴とするデータ受信装置である。

【００２７】
請求項１６の発明は、映像データを含むコンテンツからなるストリーミング・データを受信し、ストリーミング・データを、デコード処理がされるまで記憶するバッファ手段と、バッファ手段内のストリーミング・データにデコード処理を施すとともに、デコード出力の再生速度を制御可能なデコード手段と、バッファ手段内に記憶されているストリーミング・データのデータ量を所定のタイミングで取得し、データ量が第２のしきい値以上である場合は、デコード手段が通常の速度でストリーミング・データの再生を行うよう制御し、データ量が第２のしきい値を下回った場合は、デコード手段が通常の速度より低い速度でストリーミング・データの再生を行うよう制御する再生速度制御手段とを有することを特徴とするデータ受信装置である。

【００２８】
請求項１７の発明は、映像データを含むコンテンツからなるストリーミング・データを受信し、ストリーミング・データを、デコード処理がされるまで記憶するバッファ手段と、バッファ手段内のストリーミング・データにデコード処理を施すとともに、デコード出力の再生速度を制御可能なデコード手段と、バッファ手段内に記憶されているストリーミング・データのデータ量を所定のタイミングで取得し、データ量が第１のしきい値と第１のしきい値より小さい第２のしきい値の間である場合は、デコード手段が通常の速度でストリーミング・データの再生を行うよう制御し、データ量が第１のしきい値を上回った場合は、デコード手段が通常の速度より速い速度でストリーミング・データの再生を行うよう制御し、データ量が第２のしきい値を下回った場合は、デコード手段が通常の速度より低い速度でストリーミング・データの再生を行うよう制御する再生速度制御手段とを有することを特徴とするデータ受信装置である。

【００２９】
請求項２２の発明は、映像データを含むコンテンツからなるストリーミング・データを受信し、ストリーミング・データを、デコード処理がされるまでバッファ手段に記憶する記憶ステップと、バッファ手段内のストリーミング・データにデコード処理を施すとともに、デコード出力の再生速度を制御可能なデコードステップと、バッファ手段内に記憶されているストリーミング・データのデータ量を所定のタイミングで取得し、データ量が第１のしきい値以下である場合は、デコードステップが通常の速度でストリーミング・データの再生を行うよう制御し、データ量が第１のしきい値を上回った場合は、デコードステップが通常の速度より速い速度でストリーミング・データの再生を行うよう制御する再生速度制御ステップとを有することを特徴とするデータ受信方法である。

【００３０】
請求項２３の発明は、映像データを含むコンテンツからなるストリーミング・データを受信し、ストリーミング・データを、デコード処理がされるまでバッファ手段に記憶する記憶ステップと、バッファ手段内のストリーミング・データにデコード処理を施すとともに、デコード出力の再生速度を制御可能なデコードステップと、バッファ手段内に記憶されているストリーミング・データのデータ量を所定のタイミングで取得し、データ量が第２のしきい値以上である場合は、デコードステップが通常の速度でストリーミング・データの再生を行うよう制御し、データ量が第２のしきい値を下回った場合は、デコードステッ

プが通常の速度より低い速度でストリーミング・データの再生を行うよう制御する再生速度制御ステップとを有することを特徴とするデータ受信方法である。

【００３１】

請求項２４の発明は、映像データを含むコンテンツからなるストリーミング・データを受信し、ストリーミング・データを、デコード処理がされるまでバッファ手段に記憶する記憶ステップと、バッファ手段内のストリーミング・データにデコード処理を施すとともに、デコード出力の再生速度を制御可能なデコードステップと、バッファ手段内に記憶されているストリーミング・データのデータ量を所定のタイミングで取得し、データ量が第１のしきい値と第１のしきい値より小さい第２のしきい値の間である場合は、デコードステップが通常の速度でストリーミング・データの再生を行うよう制御し、データ量が第１のしきい値を上回った場合は、デコードステップが通常の速度より速い速度でストリーミング・データの再生を行うよう制御し、データ量が第２のしきい値を下回った場合は、デコードステップが通常の速度より低い速度でストリーミング・データの再生を行うよう制御する再生速度制御ステップとを有することを特徴とするデータ受信方法である。

【００３２】

この発明によれば、ＤＶＤ再生装置などのコンテンツ提供装置からコンテンツ（映像・音声データ）を配信する際に、小さなサイズのバッファを用いても、バッファ内にストリーミング・データが存在しない状態（アンダーフロー）や、バッファがストリーミング・データで一杯になる状態（オーバーフロー）の発生を抑止し、滑らかなストリーミング・データの再生を維持するように、上記ストリーミング・データのデコード処理の速度が調整される。

【００３３】

また、この発明によれば、ユーザがコンテンツ提供装置に対してリモコンの操作をした場合に、バッファ内のストリーミング・データの量を判定するしきい値を動的に変更することによって、そのコンテンツがコンテンツ提供装置より配信されてから表示装置に表示されるまでの時間を短縮するように制御される。

【００３４】

【発明の実施の形態】

以下、この発明の実施の形態について、図面を用いて説明する。また、各図にわたり、同一の構成要素には同一の符号が付されている。図１は、この発明の第１の実施の形態に係るデータ配信システム１の構成要素を示すブロック図である。

【００３５】

データ配信システム１は、コンテンツ提供装置２、送信装置４、受信装置９、表示装置１３、音声出力装置１４、およびネットワーク１５を含む。ここで、後述する受信装置９内のバッファ１６、再生速度制御部１７はそれぞれ、バッファ手段、再生速度制御手段に対応し、デコーダ１８および再生制御部１９は、デコード手段に対応する。また、コンテンツ提供装置２と送信装置４は、１つの装置として一体的に構成されてもよい。

【００３６】

コンテンツ提供装置２は、映像データおよび音声データを含むコンテンツを提供する装置であり、ＤＶＤ再生装置（ＤＶＤプレイヤー）、ビデオテープレコーダ、ビデオサーバ、アナログテレビジョン受信機、およびディジタルテレビジョン受信機等がこれに相当する。

【００３７】

また、コンテンツ提供装置２は、ＤＶＤ、ビデオカセットテープ、ハードディスク等の記録媒体からコンテンツ（映像・音声データ）を読み取り、またはディジタルテレビジョン放送やアナログテレビジョン放送を受信し、Ａ／Ｖ（Ａｕｄｉｏ／Ｖｉｓｕａｌ）データ生成部３で、そのコンテンツやテレビジョン放送を所定のフォーマットに変換し、Ａ／Ｖデータとして出力する。こうしたコンテンツ提供装置２は、通常、テレビジョンモニタ等の表示装置１３やスピーカ等の音声出力装置１４に直接接続して映像および音声を出力できる市販の装置であってもよい。また、この例では、Ａ／Ｖデータは、アナログデータと

して出力されているが、メディアの種類とコンテンツ提供装置２の機能の組み合わせによっては、ディジタルデータで出力することも可能である。

【００３８】

送信装置４は、Ａ／Ｄ変換部５、エンコーダ６、ＲＴＰ送信部７、およびネットワーク・インタフェース８を有し、受信した映像・音声データをディジタル化して圧縮し、ネットワーク１５上に送信する。

【００３９】

Ａ／Ｄ変換部５は、コンテンツ提供装置２から受信したアナログの映像・音声データをディジタルに変換する。前述したように、コンテンツ提供装置２からの出力がディジタルデータとして提供される場合、このＡ／Ｄ変換部５における処理は不要となる。

【００４０】

エンコーダ６は、Ａ／Ｄ変換部５から受信したディジタルの映像・音声データを所定の圧縮方法で圧縮する。これらのデータは、後述するように、帯域に制限のあるネットワークを介して受信装置９に送信されるので、できるだけ帯域を占有しないように圧縮されることが好ましい。また、圧縮することによって高データレートでの転送を回避し、送信装置４および受信装置９のＣＰＵ負荷を低減することも可能である。

【００４１】

こうした映像・音声データの圧縮方法としては、ＭＰＥＧ－２（Ｍｏｖｉｎｇ　Ｐｉｃｔｕｒｅ　Ｅｘｐｅｒｔｓ　Ｇｒｏｕｐ－２）が一般的に用いられている。本実施の形態では、映像データ、音声データともにＭＰＥＧ－２で圧縮符号化が行われるものとして説明を行うが、この圧縮方法に限定される必要はなく、他の圧縮方法を用いてシステムを構築することもできる。

【００４２】

次に、ＭＰＥＧ－２形式にエンコードされた映像・音声データは、ネットワーク１５上で送信を行うために、ＲＴＰ送信部７でプロトコルに応じた変調処理がされ、その後、ネットワーク・インタフェース８、ネットワーク１５、および受信装置９のネットワーク・インタフェース１０を介して受信装置９のＲＴＰ受信部１１に送信される。この例では、送信装置４と受信装置９を接続するネットワーク１５として１００ＢＡＳＥ－ＴＸのネットワーク接続からなるイーサネットＬＡＮが使用され、プロトコルはＲＴＰ（Ｒｅａｌ－ｔｉｍｅ　Ｔｒａｎｓｐｏｒｔ　Ｐｒｏｔｏｃｏｌ）が利用される。送信装置４と受信装置９との間は、その他のネットワークで接続することができ、更に、ＲＴＰ以外のプロトコルを使用することができる。例えば、ＩＥＥＥ８０２・１１ａ等の規格に基づく無線ＬＡＮでこれらの装置間でデータの転送を行うこともできる。また、これらのネットワーク接続は家庭内に限られるものと解すべきではなく、ＬＡＮ以外にも、ＷＡＮ（Ｗｉｄｅ　Ａｒｅａ　Ｎｅｔｗｏｒｋ）やＭＡＮ（Ｍｅｔｒｏｐｏｌｉｔａｎ　Ａｒｅａ　Ｎｅｔｗｏｒｋ）に適用することができる。更に、特定のネットワーク・トポロジーに限定されるものでもない。

【００４３】

コンテンツ提供装置２のなかには、ＤＶＤメディアやハードディスク内に、既にＭＰＥＧ－２のＴＳ（Ｔｒａｎｓｐｏｒｔ　Ｓｔｒｅａｍ：トランスポート・ストリーム）の形式で映像・音声データを記憶しているものもある。従って、そのような形式のデータを送信する場合、Ａ／Ｄ変換部５およびエンコーダ６を使用する必要はない。

【００４４】

本実施の形態に係るデータ配信システム１が、家庭内でホームシアターを構成するために用いられる場合は、コンテンツ提供装置２や送信装置４は、通常、リビング等の同じ部屋に配置される。受信装置９は、コンテンツ提供装置２等と同じ部屋に置かれることもあるが、離れた別の部屋に置かれることもある。

【００４５】

また、図１に示すデータ配信システム１をクライアント・サーバ型のシステムと考えれば、送信装置４がサーバであり、受信装置９がクライアントという関係になる。また、前述

したように、受信装置９が表示装置１３および音声出力装置１４と一体的に形成され、例えば、１つのテレビジョン受信機として構成される場合は、このテレビジョン受信機がクライアントとなる。

【００４６】

受信装置９は、ネットワーク・インタフェース１０、ＲＴＰ受信部１１、およびデコード部１２を有する。ネットワーク・インタフェース１０は、送信装置４のネットワーク・インタフェース８から送信されたストリーミング・データをネットワーク１５を介して受信する。ＲＴＰ受信部１１は、ネットワーク・インタフェース１０からのストリーミング・データを復調し、ＭＰＥＧ－２のＴＳを生成する。

【００４７】

デコード部１２は、上記ＴＳから映像データ、音声データを個別にデコードし、それぞれの出力装置に（すなわち、映像データはテレビジョンモニタ等の表示装置１３に、音声データはスピーカ等の音声出力装置１４に）再生タイミングを調整した上で出力する。

【００４８】

この例では、受信装置９、表示装置１３、および音声出力装置１４は、それぞれ別の装置として表されているが、受信装置９に、表示装置１３と音声出力装置１４の両方、またはどちらか一方を組み込んで単一の装置として構成することもできる。例えば、受信装置９の構成要素を全て含んだディジタルテレビジョン受信機を構成することができる。

【００４９】

このようなシステムでは、ネットワーク環境などにより多少のデータが欠落しても後続のデータが影響なく再生できるために、（ＯＳＩ参照モデルにおける）トランスポートレイヤのプロトコルとして、再送制御を行わないＵＤＰが利用されることが多い。本実施の形態で使用するＲＴＰもトランスポートレイヤにＵＤＰを利用するプロトコルである。

【００５０】

ＲＴＰ送信部７では、映像・音声データの圧縮符号化がエンコーダ６によって行われた段階で、受信装置９の状態に関係なく圧縮符号化されたストリーミング・データを受信装置９のネットワーク・インタフェース１０に送出する。従って、受信装置９では、デコード部１２の処理状態に関係なく当該ストリーミング・データを受け取ることになる。ストリーミング・データの受信間隔は一定でなく、また一回に受信するストリーミング・データのサイズもコンテンツの内容等によって変化する。デコード部１２が、ストリーミング・データのデコード処理をしている間に後続のストリーミング・データを受信しても、そのストリーミング・データをすぐに処理することはできない。

【００５１】

そのため、デコード部１２は、受信したストリーミング・データを蓄積するバッファを備え、デコード処理中に受信したストリーミング・データを後で処理できるようにしている。以下に、デコード部１２によるバッファの利用態様を、図２を参照して説明する。また、ここで説明するバッファは、例えば、ＭＰＥＧ－２のＴＳ（トランスポート・ストリーム）を記憶するものであり、ＴＳは、ビデオ・ストリームとオーディオ・ストリームを含むデータ・ストリームである。従ってこの場合は、バッファを１つ設ければよいが、映像データと音声データを別のデータ・ストリームで転送するような場合は、映像データと音声データそれぞれにバッファを設けるように構成してもよい。

【００５２】

図２は、デコード部１２が、ＲＴＰ受信部１１からストリーミング・データを受信してバッファ１６に記憶し、それを順次処理する態様が概念的に示されている。また、この図に示す例では、デコード部１２は、バッファ１６、再生速度制御部１７、デコーダ１８、および再生制御部１９を備えている。

【００５３】

最初に、ＲＴＰ受信部１１は、ネットワーク・インタフェース１０から送信装置４により送信されたストリーミング・データ（ＭＰＥＧ－２形式に圧縮符号化された映像・音声データ）を受信すると、そのデータをバッファ１６に送信する。バッファ１６は、例えば、

リングバッファ構成をとるＦＩＦＯ（Ｆｉｒｓｔ－Ｉｎ　Ｆｉｒｓｔ－Ｏｕｔ）型のメモリであり、当該ストリーミング・データを受信してそれらを蓄積する。バッファ１６内のストリーミング・データは、最初に受信したものから順に、デコーダ１８および再生制御部１９に提供され、そこでストリーミング・データのデコード処理を含む再生処理が行われる。デコーダ１８によるデコード処理では、ＭＰＥＧ－２形式のデータが、映像データ、音声データに分離され、出力装置が扱うデータ形式にそれぞれ変換され、変換されたデータが当該出力装置に送信される。映像データは、表示装置１３に出力するための形式に変換され、音声データは、音声出力装置１４に出力するための形式に変換される。

【００５４】

コンテンツの再生中に、バッファ１６に一定期間ストリーミング・データの受信がなく、デコーダ１８および再生制御部１９が、全てのストリーミング・データについて再生処理を終えた場合、デコーダ１８は次に処理すべきストリーミング・データを取得することができない。このような状態を「アンダーフロー」と言い、表示装置１３には同じフレームの映像が繰り返し表示されるフリーズ状態となる。

【００５５】

逆に、デコーダ１８および再生制御部１９でストリーミング・データの再生処理を行うペース以上にストリーミング・データを受信する場合、バッファ１６はストリーミング・データで一杯になり、新たに受信したストリーミング・データを消失するかまたは最新のデータを上書きする。これは「オーバーフロー」と呼ばれる状態で、表示装置１３には、上記消失したデータ、または上書きされたデータに対応するフレームがスキップされて表示される。

【００５６】

このような事象の発生を回避するためには、バッファ容量にマージンを加え、バッファ容量をある程度大きめに設定する必要がある。本実施の形態では、バッファ容量を、受信装置９におけるストリーミング・データの受信間隔、受信するストリーミング・データの平均サイズ、デコーダ１８および再生制御部１９の処理能力、コンテンツ提供装置２からＡ／Ｖデータが生成されてから受信装置９でストリーミング・データがデコード・再生されるまでの遅延時間等を考慮して設定する。

【００５７】

更に、本実施の形態では、例えば、図２に示すようなアンダーフローしきい値およびオーバーフローしきい値を設定するとともに、再生速度制御部１７が、バッファ１６内に記憶されたストリーミング・データの量を監視・取得する。再生速度制御部１７は、こうして取得されたストリーミング・データの量が上記アンダーフローしきい値を下回っていると判定した場合は、デコーダ１８および再生制御部１９による再生処理を低速にするよう制御し、オーバーフローしきい値を上回っていると判定した場合は、デコーダ１８および再生制御部１９による再生処理を高速にするよう制御する。

【００５８】

デコーダ１８および再生制御部１９による再生処理は、上記ＭＰＥＧ－２形式のデータをデコードしてから、当該データを表示装置１３や音声出力装置１４に再生出力するまでの処理を意味する。

【００５９】

オーバーフローしきい値は、バッファに蓄積されたストリーミング・データの量がこの値を超えた場合に、オーバーフローに近い状態であることを示すために設定されているので、バッファ１６の容量（最大容量）より小さい値で、かつこの容量の値にある程度近接する値である必要がある。同様に、アンダーフローしきい値は、バッファに蓄積されたストリーミング・データの量がこの値を下回った場合に、アンダーフローに近い状態であることを示すために設定されているので、ゼロより大きい値で、かつこのゼロの値にある程度近接する値である必要がある。例えば、図２では、オーバーフローしきい値は、バッファ１６の最大容量の位置から、バッファ１６の容量の１／７だけ下の位置（小さい値）に設定されている。一方、アンダーフローしきい値は、バッファ１６のゼロの位置から、バッ

ファ１６の容量の１／７だけ上の位置（大きい値）に設定されている。

【００６０】

デコーダ１８および再生制御部１９は協働して、再生速度制御部１７から指定された再生速度に基づきストリーミング・データの再生速度を調整するが、この速度調整には、様々な方法が考えられる。例えば、高速な再生処理を行う場合は、１秒間に６０フィールドの元の映像データを数フィールド減らして１秒より短い時間で再生する。逆に、低速な再生処理を行う場合は、上記６０フィールドに数フィールドを補間して１秒より長い時間で再生する。当該フィールドの補間は、２４コマの映画フィルムを３０コマのＤＶＤ用の映像に変換するテレシネ変換と同様の方法で行われる。こうした速度変更のための処理はフィールド単位で行われることが望ましいが、フレームなどのその他の単位で行うこともできる。

【００６１】

また、ＭＰＥＧ－２のＴＳが有するＰＴＳ（Ｐｒｅｓｅｎｔａｔｉｏｎ　Ｔｉｍｅ　Ｓｔａｍｐ）等の情報を元に、ストリーミング・データのデコード処理の開始時間を調整することもできる。

【００６２】

これらの方法を用いることによって、人間がその速度差にほとんど気づかない高速化および低速化を行うこともできる。

【００６３】

このようなデコーダ１８および再生制御部１９の再生速度の調整によって、バッファ１６内のストリーミング・データの量がアンダーフローしきい値を下回っている場合は、しだいにストリーミング・データがバッファ１６内に蓄積され、当該データの量がアンダーフローしきい値を上回る状態になる。一方、バッファ１６内のストリーミング・データの量がオーバーフローしきい値を上回っている場合は、しだいにストリーミング・データがバッファ１６内で減少し、当該データの量がオーバーフローしきい値を下回る状態になる。この結果、バッファ１６内に蓄積されたストリーミング・データの量が、アンダーフローしきい値とオーバーフローしきい値との間の値となった場合、再生速度制御部１７は、再生処理を通常の速度に戻すよう制御する。

【００６４】

次に、上述した再生速度制御部１７の動的な制御を、図３のフローチャートを用いて説明する。図３に示された処理は、所定のタイミングで繰り返し起動されるが、このタイミングは通常、再生速度制御部１７がバッファ１６を監視するタイミングと一致するものである。

【００６５】

最初に、ステップＳ１０で、再生速度制御部１７がバッファ１６内のストリーミング・データのデータ量を検出する。次に、ステップＳ１１で、この検出値と上記各しきい値との比較を行う。データ量の値がオーバーフローしきい値より大きい場合は、ステップＳ１２に進み、再生速度を高速にするよう制御する。データ量の値がアンダーフローしきい値より小さい場合は、ステップＳ１４に進み、再生速度を低速にするよう制御する。データ量の値がアンダーフローしきい値以上で、オーバーフローしきい値以下である場合は、ステップＳ１３に進み、再生速度を通常の速度にするよう制御する。

【００６６】

以上説明したように、それぞれのステップＳ１２、ステップＳ１３、ステップＳ１４で、再生速度が切り換えられるが、以前の制御によって、既に同じ速度に切り換えられている場合は、各ステップで速度切換制御を行う必要はない。また、本実施の形態の例では、２つのしきい値が用いられているが、より多くのしきい値を設定して、再生速度をより詳細なレベルで切り換えるように制御することもできる。

【００６７】

本実施の形態によって、結果的に、従来のものより小さいサイズのバッファを使用しても、バッファ内に処理すべきストリーミング・データが存在しない状態（アンダーフロー）

や、バッファがストリーミング・データで一杯になる状態（オーバーフロー）が発生する可能性を低減することができる。また、本実施の形態において従来のサイズのバッファを用いた場合は、上記オーバーフローおよびアンダーフローの発生確率がより一層低減される。

【００６８】

次に、図４ないし図７を参照して、この発明の第２の実施の形態に係るデータ配信システムについて説明する。図４は、第２の実施の形態に係るデータ配信システム２０の構成を表すブロック図である。

【００６９】

本実施の形態のデータ配信システム２０は、コンテンツ提供装置２１で生成されたＡ／Ｖデータが、送信装置２４でＭＰＥＧ－２等の好適な圧縮フォーマットにエンコードされ、ネットワーク４２を介して受信装置３２に送信され、最終的に表示装置４０および音声出力装置４１に映像や音声として出力されるという点で、前述の第１の実施の形態に係るデータ配信システム１と共通している。

【００７０】

すなわち、データ配信システム２０のＡ／Ｖデータ生成部２２、Ａ／Ｄ変換部２５、エンコーダ２６、ＲＴＰ送信部２７、およびＲＴＰ受信部３４は、データ配信システム１のＡ／Ｖデータ生成部３、Ａ／Ｄ変換部５、エンコーダ６、ＲＴＰ送信部７、およびＲＴＰ受信部１１と同様の機能を有している。従って、これらについては、詳細な説明を省略する。

【００７１】

データ配信システム２０は、データ配信システム１の機能に加え、ユーザがリモートコントロールコマンダ（以下、リモコンと称する）によって、コンテンツ提供装置２１に指示を送信する機能を有している。ユーザのリモコン操作の内容は、受信装置３２によって受信され、ネットワーク４２、および送信装置２４を介してコンテンツ提供装置２１に伝えられる。コンテンツ提供装置２１と表示装置４０は、遠く隔てて置かれたり、別の部屋の置かれたりする場合があり、このような状況では、リモコンによってコンテンツ提供装置２１を直接操作することはできない。従って、このように映像・音声データとは逆の経路でリモコンの指示をネットワークを介して伝えられることは、ユーザの操作性を向上するうえで好ましい構成であると言える。

【００７２】

また、この例では、コンテンツ提供装置２１に対する指示をリモコン３９によって行うこととしているが、受信装置３２に接続されたキーボード、マウス、タッチパネル等の他の入力装置を用いて当該指示を行うこともできる。

【００７３】

ここで、後述する受信装置９内のバッファ５１、再生速度制御部５２はそれぞれ、バッファ手段、再生速度制御手段に対応し、デコーダ５３および再生制御部５４は、デコード手段に対応する。また、リモコン３９は信号入力装置に対応し、後述するＩＲコード処理部３７は信号処理手段に対応し、表示装置４０は表示手段に対応する。更に、コンテンツ提供装置２１と送信装置２４は、前述した第１の実施の形態と同様に、１つの装置として一体的に構成され得る。

【００７４】

次に、図４のブロック図を参照して、リモコン３９による指示が伝えられる経路の順に、関連する構成要素を説明する。リモコン３９は、コンテンツ提供装置２１のリモコンであっても良いが、後で説明するコマンド変換部２９の機能により、別のリモコン３９を使用してコンテンツ提供装置に指示を送信することもできる。例えば、表示装置４０や受信装置３２に対する指令を送信することができ、更に異なるメーカからなる複数のコンテンツ提供装置２１にそれぞれ指示を送信することのできるようなものをリモコン３９として構成することができる。

【００７５】

コンテンツ提供装置２１に対するリモコン３９の指令は、例えば、コンテンツ提供装置２１がＤＶＤ再生装置であれば、ＤＶＤのコンテンツメニューの表示、コンテンツの再生、停止、チャプター一覧の表示等が考えられる。また、コンテンツ提供装置２１がディジタルテレビジョン受信装置であれば、チャンネルの変更や、データ放送を利用した双方向サービスに関する指示等が考えられる。

【００７６】

ユーザが、コンテンツ提供装置２１の操作を行うためにリモコン３９のボタンを押して指示を送信すると、その指示内容に対応する制御信号（赤外線信号）が発信される。リモコン３９は、所定のタイミングで所定のパルスを発信し、これらのタイミングの組み合わせによって、指示内容、指示対象機器、機器メーカ等を特定する。

【００７７】

こうして発信された赤外線信号は、受信装置３２の赤外線受光部３８によって受信され、ＩＲコードをＩＲコード処理部３７に送信する。ＩＲコード処理部３７は受信したＩＲコードを所定のルールに基づいて符号化し、制御コマンドを生成する。制御コマンドは次に、制御コマンド送信部３６に送信され、そこで、送信プロトコルに応じた変調処理が行われ、ネットワーク・インタフェース３３に送られる。

【００７８】

制御コマンド送信部３６によって変調された変調データは、ネットワーク・インタフェース３３から、ネットワーク４２および送信装置２４のネットワーク・インタフェース３１を介して制御コマンド受信部３０に送信される。この例では、上記変調データが、第１の実施の形態で説明したストリーミング・データの転送と同じ経路、すなわち、ネットワーク４２を介して転送されるが、別の経路を利用して転送することもできる。

【００７９】

ネットワーク・インタフェース３１によって受信された変調データは、制御コマンド受信部３０に送信され、そこで復調処理が行われ、制御コマンドが得られる。ここで得られた制御コマンドは、リモコン３９のメーカに依存したものである。従って、指示対象のコンテンツ提供装置２１が別のメーカである場合や、リモコン３９からの指示を想定していない場合には、そのリモコン３９からの制御コマンドを解釈することができない。そのような場合に、コマンド変換部２９は、受信した制御コマンドを、指示対象のコンテンツ提供装置２１の機種に対応した制御コマンドに変換する。

【００８０】

この変換は、例えば、事前に用意された変換テーブルを参照することによって行われる。変換テーブルは、例えば、各メーカ（機種）に対するそれぞれの制御コマンドが、何の操作を意味するかを対応付けて格納する。コマンド変換部２９は、変換テーブルを参照して、ネットワーク・インタフェース３１から受信した制御コマンドの内容とリモコン３９が対応するメーカ（機種）から、そのコマンドがどの操作を指示するものであるかを判定する。次に、コマンド変換部２９は、再び、変換テーブルを参照して、当該判定された操作をコンテンツ提供装置２１に指示するための制御コマンドを検索し、取得する。

【００８１】

こうして取得されたコンテンツ提供装置２１用の制御コマンドの内容は、赤外線の各パルスの発生タイミングを表すものであり、赤外線発光部２８は、この内容に沿って赤外線を出力する。

【００８２】

赤外線発光部２８から発信された赤外線は、コンテンツ提供装置２１の赤外線受光部２３によって受信され、これがコンテンツ提供装置２１によって解釈され、その解釈された内容に従って、所定の操作が行われる。

【００８３】

次に、図５を参照して本実施の形態の受信装置３２のデコード部３５の処理内容について説明する。本実施の形態のデコード部３５は、第１の実施の形態の受信装置９のデコード部１２と同様、バッファ５１および再生速度制御部５２を有し、再生速度制御部５２が、

バッファ５１内のストリーミング・データの量に応じてストリーミング・データの再生速度を変化させるよう制御して、滑らかな映像・音声データの再生を維持しようとする。

【００８４】

しかしながら、バッファ５１を有するために、コンテンツ提供装置２１のＡ／Ｖデータ生成部２２からＡ／Ｖデータが生成されてから、映像・音声データが表示装置４０、音声出力装置４１に出力されるまでに非常に大きな遅延時間が存在する。このことは、ユーザがリモコン３９を操作してコンテンツ提供装置２１に指示を送っても、その指示が反映されるのに非常に長い時間がかかることを意味する。特に、階層化されたメニューを表示させて、順次リモコンで指示をしていくような場合は、それぞれの表示を長い間待つ必要があるので、最終的に指示を完了するまでに膨大な時間がかかる。

【００８５】

また、ユーザが、表示装置４０に表示されている映像等を観てリモコン３９を操作しても、そのリモコン３９の指示を受け取ったコンテンツ提供装置２１は、後続の映像等を提供しているので、その指示を受け付けるモードにない場合もある。

【００８６】

また更に、コンテンツ提供装置２１がＤＶＤ再生装置やビデオテープレコーダである場合には、リモコン３９による指示が遅れるため、所望する再生位置や停止位置で表示が行われないなどの不都合もある。

【００８７】

このような問題を解決するために、本実施の形態のデコード部３５の再生速度制御部５２は、ユーザがリモコン３９の操作をした場合に、ＩＲコード処理部３７からの信号により、オーバーフローしきい値を小さくするように制御し、ユーザが、リモコン３９を一定時間使用しないと、通常のオーバーフローしきい値に戻すよう制御する。この制御によって、ユーザがリモコン３９を操作した場合は、バッファ５１内のストリーミング・データが通常の量であっても、オーバーフローしきい値を上回ることになり、デコーダ５３と再生制御部５４によって高速な再生処理が実現される。

【００８８】

従って、再生速度制御部５２は、バッファ５１内のストリーミング・データとしきい値を比較して、その結果に応じて再生速度を変化させるよう制御する点については、図３に関連して説明した第１の実施の形態における再生速度制御部１７と同様である。しかしながら、当該機能に加えて、オーバーフローしきい値を動的に変化させることによってリモコン３９が操作された際の応答速度を速めることができる。

【００８９】

すなわち、本実施の形態では、ユーザがリモコンを操作した場合は、コンテンツ提供装置２１からＡ／Ｖデータが提供されてから、表示装置４０等に実際に映像が表示されるまでの遅延時間を小さくすることができる。

【００９０】

図５は、このオーバーフローしきい値の変更を概念的に示す概略図である。バッファ５１内のうち、斜線で示されている部分にストリーミング・データが記憶されているものとする。オーバーフローしきい値として、通常しきい値と操作時しきい値のどちらかが選択される。図５に示されたストリーミング・データの量では、オーバーフローしきい値が通常しきい値に設定されている場合、デコーダ５３および再生制御部５４は、通常の速度でストリーミング・データの再生処理を行うが、ユーザがリモコン３９を操作して、オーバーフローしきい値が操作時しきい値に設定された場合、バッファ５１内のストリーミング・データのデータ量がオーバーフローしきい値を上回ることになり、デコーダ５３および再生制御部５４は、高速でストリーミング・データの再生処理を行う。

【００９１】

ここで、通常しきい値は、図２に示した第１の実施の形態のオーバーフローしきい値と同様のものである。操作時しきい値は、この通常しきい値とアンダーフローしきい値との間で任意に設定しうるが、通常しきい値に近い値をとると、高速な再生処理が長く継続され

ずに、実効があがらない可能性がある。図５の例では、バッファ５１の容量の中程よりやや下に設定されている。

【００９２】

デコーダ５３および再生制御部５４は、再生速度制御部５２から再生速度を受け取ると、その速度でストリーミング・データが表示装置４０等に出力されるようにデコード処理および再生制御を行う。再生速度の調整方法は、第１の実施の形態のデコーダ１８および再生制御部１９について説明したものと同様の方法が考えられる。

【００９３】

図６は、再生速度制御部５２の機能を詳細に説明するためのブロック図である。ユーザがリモコン３９を操作すると、受信装置３２の赤外線受光部３８からＩＲコード処理部３７にＩＲコードが送信される。ＩＲコード処理部３７は、ＩＲコードを受け取ると、それを制御コマンドに変換して制御コマンド送信部３６に送信するとともに、再生速度制御部５２にＩＲビジー信号を送信する。

【００９４】

再生速度制御部５２のタイマー６３は、一定期間内にＩＲコード処理部３７からＩＲビジー信号を受け取ると、セレクタ６２に、オーバーフローしきい値として操作時しきい値を設定するよう指示する。一定期間内にＩＲビジー信号を受け取らなかった場合は、セレクタ６２に、オーバーフローしきい値として、操作時しきい値より大きい通常しきい値を設定するよう指示する。

【００９５】

バッファ内データ量取得部６１は、バッファ５１内のストリーミング・データのデータ量を取得し、再生速度決定部６４に送信する。ここで、再生速度決定部６４は、図３に示すものと同様のプロセスで、バッファ内のデータ量と、オーバーフローしきい値およびアンダーフローしきい値を比較し、再生速度を決定する。再生速度決定部６４に入力されるオーバーフローしきい値は、前述のように、セレクタ６２によって適宜切り換えられたものである。

【００９６】

上述したしきい値の切り換えプロセスを図７のフローチャートを参照して説明する。最初に、タイマー６３が、ステップＳ２１でＩＲビジー信号を受信したかどうか判定する。受信したと判定された場合、ステップＳ２２に進み、そこでセレクタ６２に、オーバーフローしきい値として操作時しきい値を設定するよう指示する。

【００９７】

ステップＳ２１でＩＲビジー信号を受信していないと判定された場合、一定の周期でステップＳ２１の判定を繰り返し（ステップＳ２３のＮＯ）、一定時間が経過したら、ステップＳ２４に進む（ステップＳ２３のＹＥＳ）。ステップＳ２４では、セレクタ６２に、オーバーフローしきい値として通常しきい値を設定するよう指示する。

【００９８】

ここまで、この発明の第１および第２の実施の形態に係るデータ配信システム１、２０について、コンテンツが映像データおよび音声データを含むものとして説明してきたが、同様に、映像データのみを含むコンテンツを扱うことも可能である。映像データは、音声データに比べてサイズが大きいので、この発明による効果はより顕著である。

【００９９】

【発明の効果】

この発明によれば、ＤＶＤ再生装置などのコンテンツ提供装置からコンテンツ（映像・音声データ）を配信する際に、小さなサイズのバッファを用いても、バッファ内にストリーミング・データが存在しない状態や、バッファがストリーミング・データで一杯になる状態の発生をできるだけ抑止し、滑らかなストリーミング・データの再生を維持するように制御することができる。

【０１００】

また、この発明によれば、ユーザがコンテンツ提供装置に対してリモコンの操作をした場

合に、バッファ内のストリーミング・データの量を判定するしきい値を動的に変更することによって、そのコンテンツがコンテンツ提供装置より配信されてから表示装置に表示されるまでの時間を短縮するように制御することができる。

【図面の簡単な説明】

【図１】この発明の第１の実施の形態に係るデータ配信システムの構成を示すブロック図である。

【図２】図１に示すデータ配信システムのデコード部の構成を示すブロック図である。

【図３】図２に示すデータ配信システムの再生速度制御部が再生速度を決定するプロセスのフローチャートである。

【図４】この発明の第２の実施の形態に係るデータ配信システムの構成を示すブロック図である。

【図５】図４に示すデータ配信システムのデコード部の構成を示すブロック図である。

【図６】図５に示すデータ配信システムの再生速度制御部の構成を示すブロック図である。

【図７】図６に示すデータ配信システムの再生速度制御部がしきい値を切り換えるプロセスのフローチャートである。

【符号の説明】

１，２０・・・データ配信システム、２，２１・・・コンテンツ提供装置、４，２４・・・送信装置、９，３２・・・受信装置、１２，３５・・・デコード部、１３，４０・・・表示装置、１４，４１・・・音声出力装置、１５，４２・・・ネットワーク、１６，５１・・・バッファ、１７，５２・・・再生速度制御部、１８，５３・・・デコーダ、３７・・・ＩＲコード処理部、３９・・・リモコン

【図１】

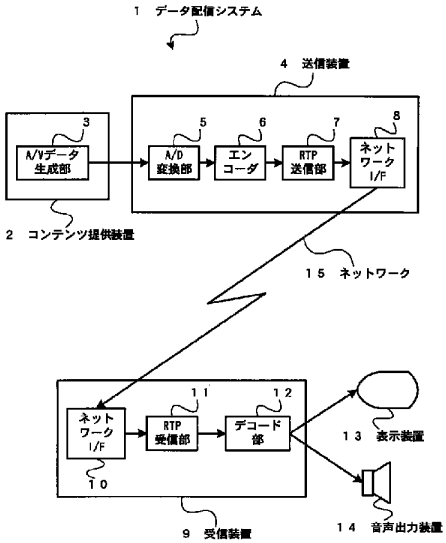

【図２】

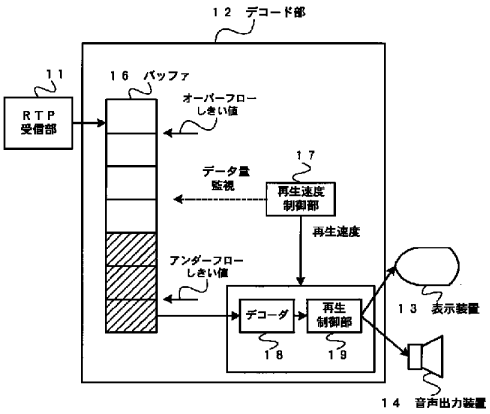

【図３】

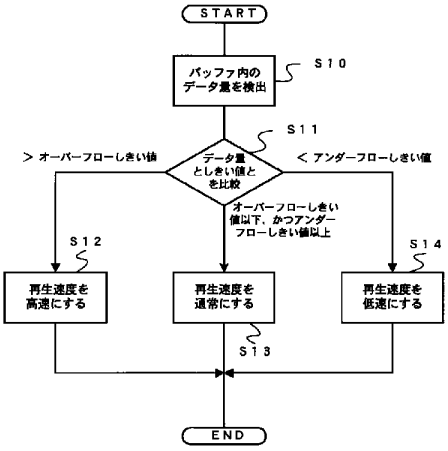
START
バッファ内のデータ量を検出
S10
S11
データ量としきい値とを比較
＞オーバーフローしきい値
＜アンダーフローしきい値
オーバーフローしきい値以下，かつアンダーフローしきい値以上
S12
S14
再生速度を高速にする
再生速度を通常にする
再生速度を低速にする
S13
END

【図４】

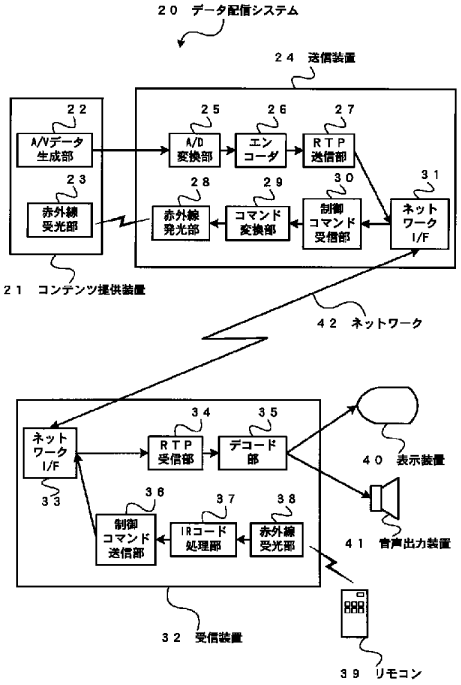
20 データ配信システム
24 送信装置
22
A/Vデータ生成部
23
赤外線受光部
25
A/D変換部
26
エンコーダ
27
RTP送信部
28
赤外線発光部
29
コマンド変換部
30
制御コマンド受信部
31
ネットワークI/F
21 コンテンツ提供装置
42 ネットワーク
ネットワークI/F
33
34
RTP受信部
35
デコード部
36
制御コマンド送信部
37
IRコード処理部
38
赤外線受光部
40 表示装置
41 音声出力装置
32 受信装置
39 リモコン

【図５】

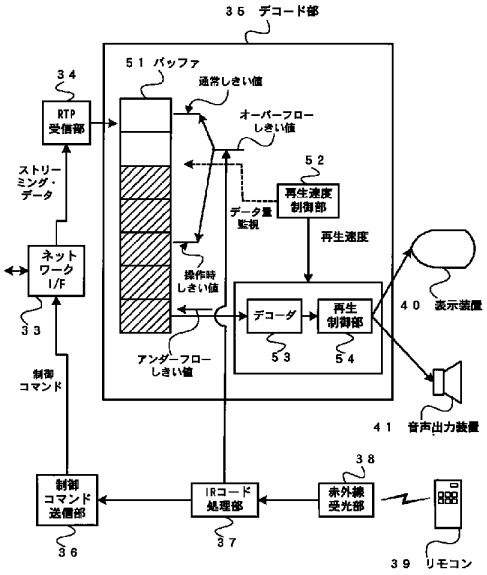
35 デコード部
51 バッファ
通常しきい値
オーバーフローしきい値
34
RTP受信部
ストリーミング・データ
52
再生速度制御部
データ量監視
再生速度
ネットワークI/F
33
操作時しきい値
デコーダ
再生制御部
53
54
40 表示装置
アンダーフローしきい値
制御コマンド
41 音声出力装置
38
制御コマンド送信部
IRコード処理部
赤外線受光部
36
37
39 リモコン

【図６】

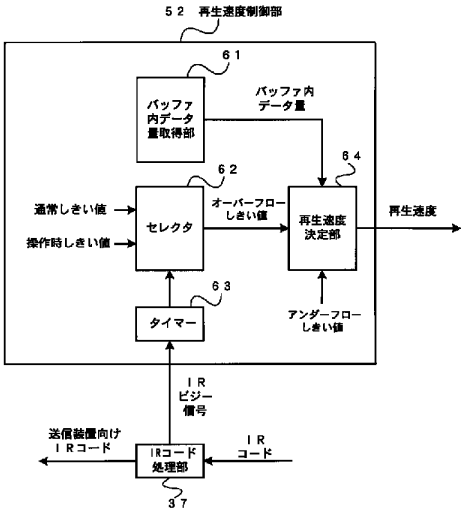
52 再生速度制御部
61
バッファ内データ量取得部
バッファ内データ量
62
64
通常しきい値
操作時しきい値
セレクタ
オーバーフローしきい値
再生速度決定部
再生速度
63
タイマー
アンダーフローしきい値
IRビジー信号
送信装置向けIRコード
IRコード処理部
IRコード
37

[7]

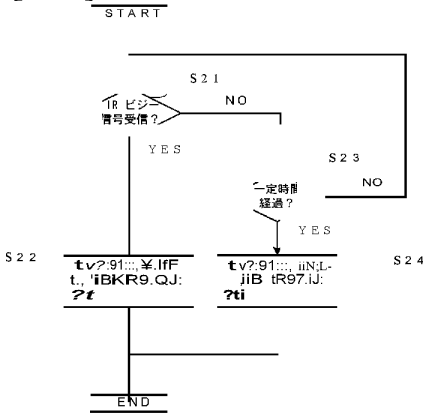
START
S21
IR ビジ
信号受信？
NO
YES
S23
NO
一定時間
経過？
YES
S22
tv?:91:::, ¥.IfF
t., 'iBKR9.QJ:
?t
tv?:91:::, iiN;L-
jiB tR97.iJ:
?ti
S24
END

Electronic Patent Application Fee Transmittal

Application Number:	13532546
Filing Date:	25-Jun-2012
Title of Invention:	VIRTUALIZED HOSTING AND DISPLAYING OF CONTENT USING A SWAPPABLE MEDIA PLAYER
First Named Inventor/Applicant Name:	David Strober
Filer:	Samuel Borodach/Maryann White
Attorney Docket Number:	30160-0005001

Filed as Small Entity

Filing Fees for Utility under 35 USC 111(a)

Description	Fee Code	Quantity	Amount	Sub-Total in USD($)
Basic Filing:				
Pages:				
Claims:				
Miscellaneous-Filing:				
Petition:				
Patent-Appeals-and-Interference:				
Post-Allowance-and-Post-Issuance:				
Extension-of-Time:				

Description	Fee Code	Quantity	Amount	Sub-Total in USD($)
Miscellaneous:				
Submission- Information Disclosure Stmt	2806	1	90	90
		Total in USD ($)		**90**

Electronic Acknowledgement Receipt

EFS ID:	26485305
Application Number:	13532546
International Application Number:	
Confirmation Number:	9012
Title of Invention:	VIRTUALIZED HOSTING AND DISPLAYING OF CONTENT USING A SWAPPABLE MEDIA PLAYER
First Named Inventor/Applicant Name:	David Strober
Customer Number:	26211
Filer:	Samuel Borodach/Maryann White
Filer Authorized By:	Samuel Borodach
Attorney Docket Number:	30160-0005001
Receipt Date:	28-JUL-2016
Filing Date:	25-JUN-2012
Time Stamp:	15:58:17
Application Type:	Utility under 35 USC 111(a)

Payment information:

Submitted with Payment	yes
Payment Type	DA
Payment was successfully received in RAM	$90
RAM confirmation Number	072916INTEFSW00002608061050
Deposit Account	061050
Authorized User	Maryann White
The Director of the USPTO is hereby authorized to charge indicated fees and credit any overpayment as follows:	

File Listing:

Document Number	Document Description	File Name	File Size(Bytes)/ Message Digest	Multi Part /.zip	Pages (if appl.)
1	Information Disclosure Statement (IDS) Form (SB08)	30160-0005001IDS.pdf	180856 6f0ef34c0d32ce4f91a00b718795d21c1d2c2f7c	no	2
Warnings:					
Information:					
This is not an USPTO supplied IDS fillable form					
2	Foreign Reference	WO2004100500.pdf	3932377 3d42df2664029eb3fabe7240d74c6b34041df013	no	33
Warnings:					
Information:					
3	Other Reference-Patent/App/Search documents	JPOA.pdf	671058 b3bc4b8fce577c2e012a7f06cef5c303b3de1f96	no	12
Warnings:					
Information:					
4	Foreign Reference	JP2006525771.pdf	714193 0e4a3ea0191039f14a10527be1485cd230dd96bb	no	27
Warnings:					
Information:					
5	Foreign Reference	JP2004356695.pdf	607171 6e5d7abbd545f2cfa42b701bd8905925e2bfd124	no	25
Warnings:					
Information:					
6	Fee Worksheet (SB06)	fee-info.pdf	30819 26280d0f6595afa24a989e4aa1dd498f77daf56e	no	2
Warnings:					

Information:	
Total Files Size (in bytes):	6136474

This Acknowledgement Receipt evidences receipt on the noted date by the USPTO of the indicated documents, characterized by the applicant, and including page counts, where applicable. It serves as evidence of receipt similar to a Post Card, as described in MPEP 503.

<u>New Applications Under 35 U.S.C. 111</u>
If a new application is being filed and the application includes the necessary components for a filing date (see 37 CFR 1.53(b)-(d) and MPEP 506), a Filing Receipt (37 CFR 1.54) will be issued in due course and the date shown on this Acknowledgement Receipt will establish the filing date of the application.

<u>National Stage of an International Application under 35 U.S.C. 371</u>
If a timely submission to enter the national stage of an international application is compliant with the conditions of 35 U.S.C. 371 and other applicable requirements a Form PCT/DO/EO/903 indicating acceptance of the application as a national stage submission under 35 U.S.C. 371 will be issued in addition to the Filing Receipt, in due course.

<u>New International Application Filed with the USPTO as a Receiving Office</u>
If a new international application is being filed and the international application includes the necessary components for an international filing date (see PCT Article 11 and MPEP 1810), a Notification of the International Application Number and of the International Filing Date (Form PCT/RO/105) will be issued in due course, subject to prescriptions concerning national security, and the date shown on this Acknowledgement Receipt will establish the international filing date of the application.

IN THE UNITED STATES PATENT AND TRADEMARK OFFICE

First Named Inventor	:	David Strober	Art Unit	:	2173
Serial No.	:	13/532,546	Examiner	:	Darrin Hope
Filed	:	June 25, 2012	Conf. No.	:	9012
Title	:	VIRTUALIZED HOSTING AND DISPLAYING OF CONTENT USING A SWAPPABLE MEDIA PLAYER			

Mail Stop Amendment
Commissioner for Patents
P.O. Box 1450
Alexandria, VA 22313-1450

AMENDMENT IN REPLY TO OFFICE ACTION OF JULY 15, 2016

Please consider the following reply.

Amendments to the claims

This listing of claims replaces all prior versions and listings of claims in the application:

Listing of Claims:

1. (Canceled)

2. (Currently Amended) The method of claim [[1]] 28, wherein the unique identifier comprises a QR code.

3. (Canceled)

4. (Currently Amended) The method of claim [[1]] 28, further including:

receiving, at the switchboard server system, ~~in the display host~~ a third message originating from the handheld Internet-enabled personal computing device, wherein the third message comprises the unique identifier and the first universal command ~~the switchboard server system~~ instructing that ~~particular~~ second content ~~is to~~ be played in the first session in the first session using a specified second media player of the media players;

converting, using the switchboard server system, the first universal command into a corresponding third converted code specific to the specified second media player to control playing of the second content on the specified second media player;

receiving, at the display host, the third converted code and the unique identifier from the switchboard server system;

in response to receiving the third converted code and the unique identifier ~~the third message~~, retrieving and loading, by the display host, the specified second media player using the first instance of the swappable media player;

playing, at the display host, the ~~particular~~ second content in the first session using the specified second media player by executing the third converted code; and

causing, by the display host, a presentation of the second content to be mirrored onto the virtual client residing on the display device.

5. (Currently Amended) The method of claim [[1]] 28 wherein the first content comprises video.

6. (Currently Amended) The method of claim [[1]] 28 wherein the first content comprises streaming media.

7. (Currently Amended) The method of claim [[1]] 28 wherein the first content comprises visual content.

8. (Currently Amended) The method of claim [[1]] 28, further including contacting the switchboard server system using the display host to check whether there is a message for the first session, wherein the first session is identified to the switchboard session using the ~~previously assigned~~ unique identifier.

9. (Canceled)

10. (Currently Amended) The method of claim [[9]] 4, further including:

establishing a third communications link between the display host and a second display device;

receiving, [[in]] at the display host, a ~~third~~ fourth message, wherein the fourth message comprises a second unique identifier associated with the second display device and a second session opened using a second instance of the swappable media player, and the first universal command instructing that ~~indicating that particular second~~ third content ~~is to~~ be played in the second session using a specified ~~second~~ third media player of the media players;

converting, using the switchboard server system, the first universal command into a corresponding fourth converted code specific to the specified third media player to control playing of the third content on the specified third media player;

receiving, at the display host, the fourth converted code and the second unique identifier from the switchboard server system;

in response to the ~~third message~~ fourth converted code and the second unique identifier, retrieving and loading, by the display host, the specified third ~~the second~~ media player using the second instance of the swappable media player;

playing, at the display host, the ~~particular second~~ third content in the second session using the specified second media player by executing the fourth converted code; and

causing, by the display host, a presentation of the ~~second~~ third content to be mirrored onto ~~the~~ a virtual client residing on the second display device.

11. (Currently Amended) The method of claim 10 wherein the first and second sessions at least partially overlap in time with one another.

12. (Currently Amended) The method of claim 3, wherein the display host retrieves the specified first media player from a content provider via the Internet.

13. (Currently Amended) A system for presenting content comprising:

a display host operable to execute multiple instances of a browser each of which operates as a swappable media player, wherein each instance of the swappable media player is operable to retrieve and load any of a plurality of different media players needed to play specified content; and

a switchboard server system,

wherein the switchboard server system is operable to perform operations including:

receiving a first message originating from a handheld Internet-enabled personal computing device distinct from the display host and the switchboard server system, wherein the first message comprises a unique identifier associated with a display device and a first session opened using a first instance of the swappable media player, and a first

universal command instructing that first content be played in the first session using a specified first media player of the media players;

converting the first universal command into a corresponding first converted code specific to the specified first media player to control playing of the first content on the specified first media player; and

transmitting the first converted code and the unique identifier to the display host; and

wherein the display host is operable to perform operations including:

~~receiving a communication from a display device storing a virtual client;~~

~~in response to receiving the communication, opening a first session using a first instance of the swappable media player;~~

~~receiving a unique identifier for the first session from the switchboard server system;~~

~~displaying the unique identifier in the first session;~~

~~causing the image of the unique identifier to be mirrored onto the virtual client residing on the display device~~

receiving ~~a first message~~ the first converted code and the unique identifier from the display host ~~from the switchboard server system instructing that particular content be played in the first session using a specified one of the media players, wherein the first message is sent by the switchboard server system to the display host in response to a message originating in a handheld Internet-enabled personal computing device and containing the unique identifier~~;

in response to receiving the first message and the unique identifier, retrieving and loading the specified first media player using the first instance of the swappable media player;

playing the ~~particular~~ first content in the first session using the specified first media player by executing the first converted code; and

causing a presentation of the ~~particular~~ first content to be mirrored onto ~~the~~ a virtual client residing on the display device;

wherein the switchboard server system is further operable to perform operations including:

receiving a second message originating from the handheld Internet-enabled personal computing device, wherein the second message comprises the unique identifier and a second universal command identifying a particular play control to be performed with respect to the first content being played in the first session, wherein the second universal command is different than the first universal command;

converting the second universal command into a corresponding second converted code specific to the specified first media player to perform the particular play control; and

transmitting the second converted code and the unique identifier to the display host; and

wherein the display host is further operable to perform operations including

receiving a ~~second message~~ the second converted code and the unique identifier from the display host from the switchboard server ~~system instructing that a particular play control command be executed with respect to the particular content being played in the first session, wherein the second message is sent by the switchboard server system to the display host in response to another message originating in the handheld Internet-enabled personal computing device and containing the unique identifier~~; and

executing the second converted code to perform the particular play control ~~command~~ with respect to the ~~particular~~ first content being played in the first session that is mirrored onto the virtual client residing on the display device~~,~~

~~operations including converting the particular play control command contained in the second message into a corresponding code to control playing of the content on the particular media player~~.

14. (Canceled)

15. (Currently Amended) The system of claim 13,

wherein the switchboard server system is further operable to perform operations including:

receiving a third message originating from the handheld Internet-enabled personal computing device, wherein the third message comprises the unique identifier and the first universal command instructing that second content be played in the first session in the first session using a specified second media player of the media players;

converting, using the switchboard server system, the first universal command into a corresponding third converted code specific to the specified second media player to control playing of the second content on the specified second media player; and

transmitting the third converted code and the unique identifier to the display host; and

wherein the display host is further operable to perform operations including:

receiving the third converted code and the unique identifier from the switchboard server system ~~a third message from the switchboard server system indicating that particular second content is to be played in the first session using a specified second media player~~;

in response to receiving the third converted code and the unique identifier ~~message~~, retrieving the second media player from a content provider and loading the second media player using the first instance of the swappable media player;

playing the ~~particular~~ second content in the first session using the specified second media player by executing the third converted code; and

causing a presentation of the second content to be mirrored onto the virtual client residing on the display device.

16. (Currently Amended) The system of claim [[13]] 15, wherein the system further includes a second display device ~~storing a virtual client~~,

wherein the switchboard server system is further operable to perform operations including:

receiving, a fourth message, wherein the fourth message comprises a second unique identifier associated with a second display device and a second session opened using a second instance of the swappable media player, and the first universal command

instructing that third content be played in the second session using a specified third media player of the media players;

converting the first universal command into a corresponding fourth converted code specific to the specified third media player to control playing of the third content on the specified third media player; and

transmitting the fourth converted code and the second unique identifier to the display host; and

wherein the display host is further operable to perform operations including:

~~receiving a communication from the second display device;~~

~~in response to receiving the communication from the second display device, opening a second session using a second instance of the swappable media player;~~

~~requesting from the switchboard server system assignment of a second unique identifier for the second session;~~

~~receiving a second unique identifier for the second session from the switchboard server system;~~

~~displaying the second unique identifier in the second session;~~

~~causing the image of the second unique identifier to be mirrored onto the virtual client residing on the second display device.~~

~~receiving a fourth message from the switchboard server system indicating that particular second content is to be played in the second session using a specified second media player;~~

receiving the fourth converted code and the second unique identifier from the switchboard server system;

in response to the fourth converted code and the second unique identifier, retrieving the specified third ~~second~~ media player from a content provider and loading the ~~second~~ third media player using the second instance of the swappable media player;

playing the ~~particular second~~ third content in the second session using the specified second media player by executing the fourth converted code; and

causing a presentation of the ~~second~~ third content to be mirrored onto ~~the~~ a virtual client residing on the second display device.

17 - 25. (Canceled)

26. (Currently Amended) The method of claim [[1]] 28, wherein converting the first universal command ~~particular play control command~~ into the corresponding first converted code comprises selecting the corresponding first converted code from among a plurality of specific codes, each of which represents a corresponding playback control command for a respective media player.

27. (Currently Amended) The method of claim [[1]] 28, wherein converting the first universal command ~~particular play control command~~ into the corresponding first converted code comprises:

determining an identity of the ~~specific~~ specified first media player;

loading an appropriate set of protocols or application programming interfaces from a library based on the identity of the ~~specific~~ specified first media player; and

converting the first universal command into the corresponding first converted code based on the set of protocols or application programming interfaces.

28. (Currently Amended) A machine-implemented method of presenting content on a display device, the method comprising:

establishing a first communications link between a display host and a switchboard server system, and a second communications link between the display host and a display device, ~~receiving, in a display host, a communication from a display device,~~ wherein the display host is operable to execute multiple instances of a browser each of which operates as a swappable media player, wherein each instance of the swappable media player is operable to retrieve and load any of a plurality of different media players needed to play specified content;

~~in response to receiving the communication from the display device, opening a first session using a first instance of the swappable media player;~~

~~requesting assignment of a unique identifier for the first session from a switchboard server system;~~

~~receiving a unique identifier for the first session from the switchboard server system;~~

~~displaying the unique identifier in the first session;~~

~~causing the display of the unique identifier to be mirrored onto a virtual client residing on the display device;~~

receiving, [[in]] at the switchboard server system, a first message originating [[in]] from a handheld Internet-enabled personal computing device distinct from the display host and the switchboard server system, wherein the first message comprises ~~the~~ a unique identifier associated with the display device and a first session opened using a first instance of the swappable media player, and a first universal command instructing that ~~particular~~ first content be played in the first session using a specified first media player ~~one~~ of the media players,

converting, using the switchboard server system, the first universal command into a corresponding first converted code specific to the specified first media player to control playing of the ~~particular~~ first content on the specified first media player;

receiving, at [[in]] the display host, the first converted code and ~~information corresponding to~~ the unique identifier from the switchboard server system;

in response to receiving the first converted code and the unique identifier, retrieving and loading, by the display host, the specified first media player using the first instance of the swappable media player;

playing, at the display host, the ~~particular~~ first content in the first session using the specified first media player by executing the first converted code;

causing, by the display host, a presentation of the ~~particular~~ first content to be mirrored onto the virtual client residing on the display device;

receiving, [[in]] at the switchboard server system, a second message originating [[in]] from the handheld Internet-enabled personal computing device, wherein the second message comprises the unique identifier and a second universal command identifying a particular play control to be performed ~~and a second command instructing that a particular play control command be executed~~ with respect to the ~~particular~~ first content being played in the first session, wherein the second universal command is different than the first universal command;

converting, using the switchboard server system, the second universal ~~second~~ command into a corresponding second converted ~~second~~ code specific to the specified first media player to

perform the particular play control ~~to control playing of the particular content on the specified media player~~;

receiving, at [[in]] the display host, [[a]] the second converted ~~second~~ code and ~~information corresponding to~~ the unique identifier from the switchboard server system; ~~and~~

executing, by the display host, the second converted code to perform the particular play control ~~command~~ with respect to the ~~particular~~ first content being played in the first session that is mirrored onto the virtual client residing on the display device.

29. (New) The method of claim 28, wherein the first universal command and the second universal command are not specific to the first media player

30. (New) A method of presenting content, the method comprising:

executing, at a display host, a plurality of instances of a browser, wherein each instance of the browser is configured to retrieve and load any of a plurality of different media players to play specified content;

associating, at a switchboard server system, a first instance of the browser with a first handheld Internet-enabled personal computing device and a first display device;

receiving, at the switchboard server system from the first personal computing device, a first message comprising a unique identifier associated with the first instance of the browser and the first display device, and a universal command instructing that first content be played in the first instance of the browser using a first media player;

converting, using the switchboard server system, the universal command to a first portion of code specific to the first media player to control playing of the first content on the first media player;

transmitting, from the switchboard server system, the first portion of code and the unique identifier to the display host;

retrieving and loading, by the display host, the first media player using the first instance of the browser;

executing, at the display host, the first portion of code to play the first content in the first instance of the browser using the first media player; and

causing, by the display host, a presentation of the first content to be mirrored onto a virtual client residing on the first display device.

31. (New) The method of claim 30, further comprising:

receiving, at the switchboard server system from the first Internet-enabled personal computing device, a second message comprising the unique identifier and the universal command instructing that second content be played in the first instance of the browser using a second media player;

converting, using the switchboard server system, the universal command to a second portion of code specific to the second media player to control playing of the second content on the second media player;

transmitting, from the switchboard server system, the second portion of code and the unique identifier to the display host;

retrieving and loading, by the display host, the second media player using the first instance of the browser;

executing, at the display host, the second portion of code to play the second content in the first instance of the browser using the second media player; and

causing, by the display host, a presentation of the second content to be mirrored onto the virtual client residing on the first display device.

32. (New) The method of claim 31, further comprising:

associating, at a switchboard server system, a second instance of the browser with a second handheld Internet-enabled personal computing device and a second display device;

receiving, at the switchboard server system from the second personal computing device, a third message comprising a second unique identifier associated with the second display device and the second instance of the browser, and the universal command instructing that third content be played in the second instance of the browser using a third media player;

converting, using the switchboard server system, the universal command to a third portion of code specific to the third media player to control playing of the third content on the third media player;

transmitting, from the switchboard server system, the third portion of code and the second unique identifier to the display host;

retrieving and loading, by the display host, the third media player using the second instance of the browser;

executing, at the display host, the third portion of code to play the third content in the second instance of the browser using the third media player;

causing, by the display host, a presentation of the third content to be mirrored onto a virtual client residing on the second display device.

33. (New) The method of claim 32, wherein the universal command is not specific to the first, second, or third media players.

REMARKS

Claims 2, 4-8, 10-13, 15-16, 26-33 are presented for further examination.

Claim Rejections - 35 USC § 103

Claims 1, 4-8, 13, 15, 16, 26, 27, and 28 were rejected under pre-AIA 35 U.S.C. 103(a) as allegedly being unpatentable over Fok Ah Chuen et al. (US 2012/0102209 Al) (hereinafter "Fok Ah Chuen") in view of Malik (US 2007/0155506 Al), and further in view of Mahajan et al. (US 2009/0248802 Al) (hereinafter "Mahajan").

Claims 2 and 12 were rejected under pre-AIA 35 U.S.C. 103(a) as allegedly being unpatentable over Fok Ah Chuen, Malik, and Mahajan, and further in view of Sukeda et al. (US 2009/0172780 Al) (hereinafter "Sukeda").

Claims 9-11 are rejected under pre-AIA 35 U.S.C. 103(a) as being unpatentable over Fok Ah Chuen, Malik, and Mahajan, and further in view of Hu et al. (US 8,402,494 B1) (hereinafter "Hu").

Reconsideration is respectfully requested.

Without agreeing with the Office's positions and in an effort to compact prosecution, the Applicant has canceled independent claim 1 and amended dependent claims 2, 4-8, 10-12, and 26-27 to depend, either directly, or indirectly, from claim 28.

Further, the Applicant has amended claim 28 to recite:

> 28. A machine-implemented method of presenting content on a display device, the method comprising:
>
> establishing a first communications link between a display host and a switchboard server system, and a second communications link between the display host and a display device, wherein the display host is operable to execute multiple instances of a browser each of which operates as a swappable media player, wherein each instance of the swappable media player is operable to retrieve and load any of a plurality of different media players needed to play specified content;

> receiving, at the switchboard server system, a first message originating from a handheld Internet-enabled personal computing device distinct from the display host and the switchboard server system, wherein the first message comprises a unique identifier associated with the display device and a first session opened using a first instance of the swappable media player, and a first universal command instructing that first content be played in the first session using a specified first media player of the media players,
>
> converting, using the switchboard server system, the first universal command into a corresponding first converted code specific to the specified first media player to control playing of the first content on the specified first media player;
>
> receiving, at the display host, the first converted code and the unique identifier from the switchboard server system;
>
> in response to receiving the first converted code and the unique identifier, retrieving and loading, by the display host, the specified first media player using the first instance of the swappable media player;
>
> playing, at the display host, the first content in the first session using the specified first media player by executing the first converted code;
>
> causing, by the display host, a presentation of the first content to be mirrored onto the virtual client residing on the display device;
>
> receiving, at the switchboard server system, a second message originating from the handheld Internet-enabled personal computing device, wherein the second message comprises the unique identifier and a second universal command identifying a particular play control to be performed with respect to the first content being played in the first session, wherein the second universal command is different than the first universal command;
>
> converting, using the switchboard server system, the second universal command into a corresponding second converted code specific to the specified first media player to perform the particular play control;
>
> receiving, at the display host, the second converted code and the unique identifier from the switchboard server system;
>
> executing, by the display host, the second converted code to perform the particular play control with respect to the first content being played in the first session that is mirrored onto the virtual client residing on the display device.

That is, a switchboard server system receives *universal commands* from a handheld Internet-enabled personal computing device, and converts those universal commands into *converted codes specific to a specified media player*. The converted codes are subsequently received by the display host for execution. Support for these amendments can be found, for example, in paras. [0026] – [0035] of the published application (US 2013/0031478 A1).

The cited references do not disclose or suggest the aforementioned features, either alone or in any combination. Fok Ah Chuen discloses a "method for establishing a Thin Client session between a Thin Client device … and a Thin Client server" (*see* Abstract). Malik discloses implementations that "enable an interactive game" (*see* Abstract). However, neither Fok Ah

Chuen nor Malik disclose or suggest converting a "*universal command*" to a "*converted code*" *specific to a specified media player* at all, much less receiving a "universal command" at a switchboard server from a handheld Internet-enabled personal computing device, converting the "universal command" to "converted code" specific to a specified media player at the switchboard server, and receiving the "converted code" at the display host for execution, as recited in claim 28. As such, Fok Ah Chuen and Malik do not disclose or suggest each of the features of amended claim 28, either alone or in combination.

Mahajan does not cure the foregoing deficiencies. Mahajan discloses "[t]echniques relating to managing multimedia transmissions in terminal services" (*see* Abstract). Although Mahajan generally discloses that a server can "intercept" a command from a "server media platform" to a "client media platform," Mahajan specifically teaches that the "server media platform ... translates[s] intercepted *platform specific media commands* ***into*** *generic or abstracted media commands*" (*see* para. [0036]). Subsequently, these "*generic or abstracted media commands*" are transmitted from the server media platform to the client media platform (*see* para. [0036]).

That is, Mahajan teaches a server system that performs essentially the *opposite* as the switchboard server system recited in claim 28 (*e.g.,* a server system that generates *converted code specific to a specified media player* ***from*** *universal commands*, and passes the specific *converted code* to a display host for execution).

Further, Mahajan does not disclose or suggest how to modify a server media platform to convert universal commands and send converted code in the specific manner claimed, nor does Manahan disclose or suggest any benefit that might be obtained from making such a modification. As such, the aforementioned subject matter also would not have been obvious in view of Mahajan, either alone or in any combination with Fok Ah Chuen and Malik.

Sukeda and Hu also do not cure the foregoing deficiencies. Sukeda discloses techniques "for displaying various contents such as moving images, still images, and texts" (*see* Abstract). Hu discloses techniques for "[d]isplaying video on a video display device" (*see* Abstract). However, neither Sukeda nor Hu disclose or suggest converting a "*universal command*" to a "*converted code*" *specific to a specified media player* at all, much less receiving a "universal command" at a switchboard server from a handheld Internet-enabled personal computing device,

converting the "universal command" to "converted code" specific to a specified media player at the switchboard server, and receiving the "converted code" at the display host for execution, as recited in claim 28. As such, the aforementioned subject matter also would not have been obvious in view of Sukeda or Hu, either alone or in any combination with Fok Ah Chuen, Malik, and Mahajan.

Therefore, in view of the foregoing amendments and remarks, the rejection of claim 28 should be withdrawn and the claim allowed. Claims 2, 4-8, 10-12, and 26-27 depend either directly or indirectly from claim 28, and for at least the same reasons, the rejection of claims 2, 4-8, 10-12, and 26-27 also should be withdrawn and the claims allowed.

Claim 13 has been amended to recite similar limitations as claim 28, and for at least the same reasons as discussed above, the rejection of claim 13 also should be withdrawn and the claim allowed. Claims 15 and 16 depend from claim 13 and for at least the same reasons, the rejection of claims 15 and 16 also should be withdrawn and the claims allowed.

New Claims

Newly presented claim 29 depends from claim 28, and should be allowable at least for the reasons discussed above. Furthermore, claim 29 recites additional language that renders it independently patentable. Support for the features recited in claim 29 can be found, for example, in para. [0029] of the published application.

Newly presented claims 30-33 also should be allowed. For example, claim 30 recites that a "switchboard server system" can receive a "universal command" from a "first personal computing device," and convert the "universal command" into a "first portion of code *specific to [a] first media player*" on a "first instance of [a] browser." Further, claim 31 recites that the "switchboard server system can receive the *same* "universal command" from the "first personal computing device," and convert that "universal command" into a *different* "second portion of code *specific to [a] second media player*" on the "first instance of the browser." Further, claim 32 recites that the "switchboard server system can receive the *same* "universal command" from a *different* "second personal computing device," and convert that "universal command" into a *different* "third portion of code *specific to [a] third media player*" on a *different* "second instance of the browser." That is, the same universal command can be converted into different portions of

code with respect to different media players and/or different instances of the browser. Support for the features recited in claims 30-33 can be found, for example, in paras. [0026] – [0035] of the published application.

Conclusion

The Applicant submits that all of the claims are in condition for allowance and request entry of the proposed amendments and confirmation of allowance by the Examiner. It is believed that all of the pending issues have been addressed. However, the absence of a reply to a specific rejection, issue, or comment does not signify applicants' agreement. In addition, because the arguments made above may not be exhaustive, there may be additional reasons for patentability of any or all pending claims (or other claims) that have not been expressed. Further, the amendment of any claim does not necessarily signify concession of unpatentability of the claim prior to its amendment.

The fees for excess claims and extension of time are being paid with this reply on the Electronic Filing System. Apply those fees and any other necessary charges or credits to Deposit Account 06-1050, referencing the above attorney docket number.

Respectfully submitted,

Date: January 13, 2017

/Richard Wong/
Richard Wong
Reg. No. 73,259

Customer Number 26211
Fish & Richardson P.C.
Telephone: (212) 765-5070
Facsimile: (877) 769-7945

30955513.doc

Electronic Patent Application Fee Transmittal

Application Number:	13532546
Filing Date:	25-Jun-2012
Title of Invention:	VIRTUALIZED HOSTING AND DISPLAYING OF CONTENT USING A SWAPPABLE MEDIA PLAYER
First Named Inventor/Applicant Name:	David Strober
Filer:	Richard Wong/Maryannq White
Attorney Docket Number:	30160-0005001

Filed as Small Entity

Filing Fees for Utility under 35 USC 111(a)

Description	Fee Code	Quantity	Amount	Sub-Total in USD($)
Basic Filing:				
Pages:				
Claims:				
Miscellaneous-Filing:				
Petition:				
Patent-Appeals-and-Interference:				
Post-Allowance-and-Post-Issuance:				
Extension-of-Time:				

Description	Fee Code	Quantity	Amount	Sub-Total in USD($)
Extension - 3 months with $0 paid	2253	1	700	700
Miscellaneous:				
			Total in USD ($)	**700**

Electronic Acknowledgement Receipt

EFS ID:	28058206
Application Number:	13532546
International Application Number:	
Confirmation Number:	9012
Title of Invention:	VIRTUALIZED HOSTING AND DISPLAYING OF CONTENT USING A SWAPPABLE MEDIA PLAYER
First Named Inventor/Applicant Name:	David Strober
Customer Number:	26211
Filer:	Richard Wong/Maryannq White
Filer Authorized By:	Richard Wong
Attorney Docket Number:	30160-0005001
Receipt Date:	13-JAN-2017
Filing Date:	25-JUN-2012
Time Stamp:	13:09:26
Application Type:	Utility under 35 USC 111(a)

Payment information:

Submitted with Payment	yes
Payment Type	DA
Payment was successfully received in RAM	$700
RAM confirmation Number	011317INTEFSW00011073061050
Deposit Account	
Authorized User	
The Director of the USPTO is hereby authorized to charge indicated fees and credit any overpayment as follows:	

File Listing:

Document Number	Document Description	File Name	File Size(Bytes)/ Message Digest	Multi Part /.zip	Pages (if appl.)
1		30160-0005001Response.pdf	171109 e238859a09d5f825bc473254a16172e20536fae5	yes	18

	Multipart Description/PDF files in .zip description		
	Document Description	**Start**	**End**
	Amendment/Req. Reconsideration-After Non-Final Reject	1	1
	Claims	2	13
	Applicant Arguments/Remarks Made in an Amendment	14	18

Warnings:

Information:

2	Fee Worksheet (SB06)	fee-info.pdf	31155 2c653cb42ceb466c7a19cdd3955ab7cb450871dc	no	2

Warnings:

Information:

Total Files Size (in bytes):	202264

This Acknowledgement Receipt evidences receipt on the noted date by the USPTO of the indicated documents, characterized by the applicant, and including page counts, where applicable. It serves as evidence of receipt similar to a Post Card, as described in MPEP 503.

New Applications Under 35 U.S.C. 111
If a new application is being filed and the application includes the necessary components for a filing date (see 37 CFR 1.53(b)-(d) and MPEP 506), a Filing Receipt (37 CFR 1.54) will be issued in due course and the date shown on this Acknowledgement Receipt will establish the filing date of the application.

National Stage of an International Application under 35 U.S.C. 371
If a timely submission to enter the national stage of an international application is compliant with the conditions of 35 U.S.C. 371 and other applicable requirements a Form PCT/DO/EO/903 indicating acceptance of the application as a national stage submission under 35 U.S.C. 371 will be issued in addition to the Filing Receipt, in due course.

New International Application Filed with the USPTO as a Receiving Office
If a new international application is being filed and the international application includes the necessary components for an international filing date (see PCT Article 11 and MPEP 1810), a Notification of the International Application Number and of the International Filing Date (Form PCT/RO/105) will be issued in due course, subject to prescriptions concerning national security, and the date shown on this Acknowledgement Receipt will establish the international filing date of the application.

PTO/SB/06 (09-11)
Approved for use through 1/31/2014. OMB 0651-0032
U.S. Patent and Trademark Office; U.S. DEPARTMENT OF COMMERCE
Under the Paperwork Reduction Act of 1995, no persons are required to respond to a collection of information unless it displays a valid OMB control number.

PATENT APPLICATION FEE DETERMINATION RECORD

Substitute for Form PTO-875

Application or Docket Number	Filing Date	
13/532,546	06/25/2012	☐ To be Mailed

ENTITY: ☐ LARGE ☒ SMALL ☐ MICRO

APPLICATION AS FILED – PART I

FOR	NUMBER FILED (Column 1)	NUMBER EXTRA (Column 2)	RATE ($)	FEE ($)
☐ BASIC FEE (37 CFR 1.16(a), (b), or (c))	N/A	N/A	N/A	
☐ SEARCH FEE (37 CFR 1.16(k), (i), or (m))	N/A	N/A	N/A	
☐ EXAMINATION FEE (37 CFR 1.16(o), (p), or (q))	N/A	N/A	N/A	
TOTAL CLAIMS (37 CFR 1.16(i))	minus 20 =	*	X $ =	
INDEPENDENT CLAIMS (37 CFR 1.16(h))	minus 3 =	*	X $ =	
☐ APPLICATION SIZE FEE (37 CFR 1.16(s))	If the specification and drawings exceed 100 sheets of paper, the application size fee due is $310 ($155 for small entity) for each additional 50 sheets or fraction thereof. See 35 U.S.C. 41(a)(1)(G) and 37 CFR 1.16(s).			
☐ MULTIPLE DEPENDENT CLAIM PRESENT (37 CFR 1.16(j))				
* If the difference in column 1 is less than zero, enter "0" in column 2.			TOTAL	

APPLICATION AS AMENDED – PART II

AMENDMENT

01/13/2017	CLAIMS REMAINING AFTER AMENDMENT (Column 1)		HIGHEST NUMBER PREVIOUSLY PAID FOR (Column 2)	PRESENT EXTRA (Column 3)	RATE ($)	ADDITIONAL FEE ($)
Total (37 CFR 1.16(i))	* 20	Minus	** 25	= 0	X $40 =	0
Independent (37 CFR 1.16(h))	* 3	Minus	***4	= 0	X $210 =	0
☐ Application Size Fee (37 CFR 1.16(s))						
☐ FIRST PRESENTATION OF MULTIPLE DEPENDENT CLAIM (37 CFR 1.16(j))						
					TOTAL ADD'L FEE	**0**

AMENDMENT

	CLAIMS REMAINING AFTER AMENDMENT (Column 1)		HIGHEST NUMBER PREVIOUSLY PAID FOR (Column 2)	PRESENT EXTRA (Column 3)	RATE ($)	ADDITIONAL FEE ($)
Total (37 CFR 1.16(i))	*	Minus	**	=	X $ =	
Independent (37 CFR 1.16(h))	*	Minus	***	=	X $ =	
☐ Application Size Fee (37 CFR 1.16(s))						
☐ FIRST PRESENTATION OF MULTIPLE DEPENDENT CLAIM (37 CFR 1.16(j))						
					TOTAL ADD'L FEE	

* If the entry in column 1 is less than the entry in column 2, write "0" in column 3.
** If the "Highest Number Previously Paid For" IN THIS SPACE is less than 20, enter "20".
*** If the "Highest Number Previously Paid For" IN THIS SPACE is less than 3, enter "3".
The "Highest Number Previously Paid For" (Total or Independent) is the highest number found in the appropriate box in column 1.

SLIE
TAMMY ACREE

This collection of information is required by 37 CFR 1.16. The information is required to obtain or retain a benefit by the public which is to file (and by the USPTO to process) an application. Confidentiality is governed by 35 U.S.C. 122 and 37 CFR 1.14. This collection is estimated to take 12 minutes to complete, including gathering, preparing, and submitting the completed application form to the USPTO. Time will vary depending upon the individual case. Any comments on the amount of time you require to complete this form and/or suggestions for reducing this burden, should be sent to the Chief Information Officer, U.S. Patent and Trademark Office, U.S. Department of Commerce, P.O. Box 1450, Alexandria, VA 22313-1450. DO NOT SEND FEES OR COMPLETED FORMS TO THIS ADDRESS. **SEND TO: Commissioner for Patents, P.O. Box 1450, Alexandria, VA 22313-1450.**
If you need assistance in completing the form, call 1-800-PTO-9199 and select option 2.

UNITED STATES PATENT AND TRADEMARK OFFICE

UNITED STATES DEPARTMENT OF COMMERCE
United States Patent and Trademark Office
Address: COMMISSIONER FOR PATENTS
P.O. Box 1450
Alexandria, Virginia 22313-1450
www.uspto.gov

NOTICE OF ALLOWANCE AND FEE(S) DUE

26211 7590 05/08/2017
FISH & RICHARDSON P.C. (NY)
P.O. BOX 1022
MINNEAPOLIS, MN 55440-1022

EXAMINER
HOPE, DARRIN

ART UNIT	PAPER NUMBER
2173	

DATE MAILED: 05/08/2017

APPLICATION NO.	FILING DATE	FIRST NAMED INVENTOR	ATTORNEY DOCKET NO.	CONFIRMATION NO.
13/532,546	06/25/2012	David Strober	30160-0005001	9012

TITLE OF INVENTION: VIRTUALIZED HOSTING AND DISPLAYING OF CONTENT USING A SWAPPABLE MEDIA PLAYER

APPLN. TYPE	ENTITY STATUS	ISSUE FEE DUE	PUBLICATION FEE DUE	PREV. PAID ISSUE FEE	TOTAL FEE(S) DUE	DATE DUE
nonprovisional	SMALL	$480	$0	$0	$480	08/08/2017

THE APPLICATION IDENTIFIED ABOVE HAS BEEN EXAMINED AND IS ALLOWED FOR ISSUANCE AS A PATENT. PROSECUTION ON THE MERITS IS CLOSED. THIS NOTICE OF ALLOWANCE IS NOT A GRANT OF PATENT RIGHTS. THIS APPLICATION IS SUBJECT TO WITHDRAWAL FROM ISSUE AT THE INITIATIVE OF THE OFFICE OR UPON PETITION BY THE APPLICANT. SEE 37 CFR 1.313 AND MPEP 1308.

THE ISSUE FEE AND PUBLICATION FEE (IF REQUIRED) MUST BE PAID WITHIN THREE MONTHS FROM THE MAILING DATE OF THIS NOTICE OR THIS APPLICATION SHALL BE REGARDED AS ABANDONED. THIS STATUTORY PERIOD CANNOT BE EXTENDED. SEE 35 U.S.C. 151. THE ISSUE FEE DUE INDICATED ABOVE DOES NOT REFLECT A CREDIT FOR ANY PREVIOUSLY PAID ISSUE FEE IN THIS APPLICATION. IF AN ISSUE FEE HAS PREVIOUSLY BEEN PAID IN THIS APPLICATION (AS SHOWN ABOVE), THE RETURN OF PART B OF THIS FORM WILL BE CONSIDERED A REQUEST TO REAPPLY THE PREVIOUSLY PAID ISSUE FEE TOWARD THE ISSUE FEE NOW DUE.

HOW TO REPLY TO THIS NOTICE:

I. Review the ENTITY STATUS shown above. If the ENTITY STATUS is shown as SMALL or MICRO, verify whether entitlement to that entity status still applies.

If the ENTITY STATUS is the same as shown above, pay the TOTAL FEE(S) DUE shown above.

If the ENTITY STATUS is changed from that shown above, on PART B - FEE(S) TRANSMITTAL, complete section number 5 titled "Change in Entity Status (from status indicated above)".

For purposes of this notice, small entity fees are 1/2 the amount of undiscounted fees, and micro entity fees are 1/2 the amount of small entity fees.

II. PART B - FEE(S) TRANSMITTAL, or its equivalent, must be completed and returned to the United States Patent and Trademark Office (USPTO) with your ISSUE FEE and PUBLICATION FEE (if required). If you are charging the fee(s) to your deposit account, section "4b" of Part B - Fee(s) Transmittal should be completed and an extra copy of the form should be submitted. If an equivalent of Part B is filed, a request to reapply a previously paid issue fee must be clearly made, and delays in processing may occur due to the difficulty in recognizing the paper as an equivalent of Part B.

III. All communications regarding this application must give the application number. Please direct all communications prior to issuance to Mail Stop ISSUE FEE unless advised to the contrary.

IMPORTANT REMINDER: Utility patents issuing on applications filed on or after Dec. 12, 1980 may require payment of maintenance fees. It is patentee's responsibility to ensure timely payment of maintenance fees when due.

PART B - FEE(S) TRANSMITTAL

Complete and send this form, together with applicable fee(s), to: Mail **Mail Stop ISSUE FEE**
Commissioner for Patents
P.O. Box 1450
Alexandria, Virginia 22313-1450
or Fax (571)-273-2885

INSTRUCTIONS: This form should be used for transmitting the ISSUE FEE and PUBLICATION FEE (if required). Blocks 1 through 5 should be completed where appropriate. All further correspondence including the Patent, advance orders and notification of maintenance fees will be mailed to the current correspondence address as indicated unless corrected below or directed otherwise in Block 1, by (a) specifying a new correspondence address; and/or (b) indicating a separate "FEE ADDRESS" for maintenance fee notifications.

CURRENT CORRESPONDENCE ADDRESS (Note: Use Block 1 for any change of address)

26211 7590 05/08/2017
FISH & RICHARDSON P.C. (NY)
P.O. BOX 1022
MINNEAPOLIS, MN 55440-1022

Note: A certificate of mailing can only be used for domestic mailings of the Fee(s) Transmittal. This certificate cannot be used for any other accompanying papers. Each additional paper, such as an assignment or formal drawing, must have its own certificate of mailing or transmission.

Certificate of Mailing or Transmission

I hereby certify that this Fee(s) Transmittal is being deposited with the United States Postal Service with sufficient postage for first class mail in an envelope addressed to the Mail Stop ISSUE FEE address above, or being facsimile transmitted to the USPTO (571) 273-2885, on the date indicated below.

(Depositor's name)
(Signature)
(Date)

APPLICATION NO.	FILING DATE	FIRST NAMED INVENTOR	ATTORNEY DOCKET NO.	CONFIRMATION NO.
13/532,546	06/25/2012	David Strober	30160-0005001	9012

TITLE OF INVENTION: VIRTUALIZED HOSTING AND DISPLAYING OF CONTENT USING A SWAPPABLE MEDIA PLAYER

APPLN. TYPE	ENTITY STATUS	ISSUE FEE DUE	PUBLICATION FEE DUE	PREV. PAID ISSUE FEE	TOTAL FEE(S) DUE	DATE DUE
nonprovisional	SMALL	$480	$0	$0	$480	08/08/2017

EXAMINER	ART UNIT	CLASS-SUBCLASS
HOPE, DARRIN	2173	715-716000

1. Change of correspondence address or indication of "Fee Address" (37 CFR 1.363).
- ❑ Change of correspondence address (or Change of Correspondence Address form PTO/SB/122) attached.
- ❑ "Fee Address" indication (or "Fee Address" Indication form PTO/SB/47; Rev 03-02 or more recent) attached. **Use of a Customer Number is required.**

2. For printing on the patent front page, list
(1) The names of up to 3 registered patent attorneys or agents OR, alternatively,
(2) The name of a single firm (having as a member a registered attorney or agent) and the names of up to 2 registered patent attorneys or agents. If no name is listed, no name will be printed.

1 _____
2 _____
3 _____

3. ASSIGNEE NAME AND RESIDENCE DATA TO BE PRINTED ON THE PATENT (print or type)

PLEASE NOTE: Unless an assignee is identified below, no assignee data will appear on the patent. If an assignee is identified below, the document has been filed for recordation as set forth in 37 CFR 3.11. Completion of this form is NOT a substitute for filing an assignment.

(A) NAME OF ASSIGNEE (B) RESIDENCE: (CITY and STATE OR COUNTRY)

Please check the appropriate assignee category or categories (will not be printed on the patent) : ❑ Individual ❑ Corporation or other private group entity ❑ Government

4a. The following fee(s) are submitted:
- ❑ Issue Fee
- ❑ Publication Fee (No small entity discount permitted)
- ❑ Advance Order - # of Copies _____

4b. Payment of Fee(s): **(Please first reapply any previously paid issue fee shown above)**
- ❑ A check is enclosed.
- ❑ Payment by credit card. Form PTO-2038 is attached.
- ❑ The director is hereby authorized to charge the required fee(s), any deficiency, or credits any overpayment, to Deposit Account Number _____ (enclose an extra copy of this form).

5. **Change in Entity Status** (from status indicated above)
- ❑ Applicant certifying micro entity status. See 37 CFR 1.29 — NOTE: Absent a valid certification of Micro Entity Status (see forms PTO/SB/15A and 15B), issue fee payment in the micro entity amount will not be accepted at the risk of application abandonment.
- ❑ Applicant asserting small entity status. See 37 CFR 1.27 — NOTE: If the application was previously under micro entity status, checking this box will be taken to be a notification of loss of entitlement to micro entity status.
- ❑ Applicant changing to regular undiscounted fee status. — NOTE: Checking this box will be taken to be a notification of loss of entitlement to small or micro entity status, as applicable.

NOTE: This form must be signed in accordance with 37 CFR 1.31 and 1.33. See 37 CFR 1.4 for signature requirements and certifications.

Authorized Signature _____ Date _____

Typed or printed name _____ Registration No. _____

PTOL-85 Part B (10-13) Approved for use through 10/31/2013. OMB 0651-0033 U.S. Patent and Trademark Office; U.S. DEPARTMENT OF COMMERCE

UNITED STATES PATENT AND TRADEMARK OFFICE

UNITED STATES DEPARTMENT OF COMMERCE
United States Patent and Trademark Office
Address: COMMISSIONER FOR PATENTS
P.O. Box 1450
Alexandria, Virginia 22313-1450
www.uspto.gov

APPLICATION NO.	FILING DATE	FIRST NAMED INVENTOR	ATTORNEY DOCKET NO.	CONFIRMATION NO.
13/532,546	06/25/2012	David Strober	30160-0005001	9012

26211 7590 05/08/2017
FISH & RICHARDSON P.C. (NY)
P.O. BOX 1022
MINNEAPOLIS, MN 55440-1022

EXAMINER
HOPE, DARRIN

ART UNIT	PAPER NUMBER
2173	

DATE MAILED: 05/08/2017

Determination of Patent Term Adjustment under 35 U.S.C. 154 (b)
(Applications filed on or after May 29, 2000)

The Office has discontinued providing a Patent Term Adjustment (PTA) calculation with the Notice of Allowance.

Section 1(h)(2) of the AIA Technical Corrections Act amended 35 U.S.C. 154(b)(3)(B)(i) to eliminate the requirement that the Office provide a patent term adjustment determination with the notice of allowance. See Revisions to Patent Term Adjustment, 78 Fed. Reg. 19416, 19417 (Apr. 1, 2013). Therefore, the Office is no longer providing an initial patent term adjustment determination with the notice of allowance. The Office will continue to provide a patent term adjustment determination with the Issue Notification Letter that is mailed to applicant approximately three weeks prior to the issue date of the patent, and will include the patent term adjustment on the patent. Any request for reconsideration of the patent term adjustment determination (or reinstatement of patent term adjustment) should follow the process outlined in 37 CFR 1.705.

Any questions regarding the Patent Term Extension or Adjustment determination should be directed to the Office of Patent Legal Administration at (571)-272-7702. Questions relating to issue and publication fee payments should be directed to the Customer Service Center of the Office of Patent Publication at 1-(888)-786-0101 or (571)-272-4200.

PTOL-85 (Rev. 02/11)

OMB Clearance and PRA Burden Statement for PTOL-85 Part B

The Paperwork Reduction Act (PRA) of 1995 requires Federal agencies to obtain Office of Management and Budget approval before requesting most types of information from the public. When OMB approves an agency request to collect information from the public, OMB (i) provides a valid OMB Control Number and expiration date for the agency to display on the instrument that will be used to collect the information and (ii) requires the agency to inform the public about the OMB Control Number's legal significance in accordance with 5 CFR 1320.5(b).

The information collected by PTOL-85 Part B is required by 37 CFR 1.311. The information is required to obtain or retain a benefit by the public which is to file (and by the USPTO to process) an application. Confidentiality is governed by 35 U.S.C. 122 and 37 CFR 1.14. This collection is estimated to take 12 minutes to complete, including gathering, preparing, and submitting the completed application form to the USPTO. Time will vary depending upon the individual case. Any comments on the amount of time you require to complete this form and/or suggestions for reducing this burden, should be sent to the Chief Information Officer, U.S. Patent and Trademark Office, U.S. Department of Commerce, P.O. Box 1450, Alexandria, Virginia 22313-1450. DO NOT SEND FEES OR COMPLETED FORMS TO THIS ADDRESS. SEND TO: Commissioner for Patents, P.O. Box 1450, Alexandria, Virginia 22313-1450. Under the Paperwork Reduction Act of 1995, no persons are required to respond to a collection of information unless it displays a valid OMB control number.

Privacy Act Statement

The Privacy Act of 1974 (P.L. 93-579) requires that you be given certain information in connection with your submission of the attached form related to a patent application or patent. Accordingly, pursuant to the requirements of the Act, please be advised that: (1) the general authority for the collection of this information is 35 U.S.C. 2(b)(2); (2) furnishing of the information solicited is voluntary; and (3) the principal purpose for which the information is used by the U.S. Patent and Trademark Office is to process and/or examine your submission related to a patent application or patent. If you do not furnish the requested information, the U.S. Patent and Trademark Office may not be able to process and/or examine your submission, which may result in termination of proceedings or abandonment of the application or expiration of the patent.

The information provided by you in this form will be subject to the following routine uses:

1. The information on this form will be treated confidentially to the extent allowed under the Freedom of Information Act (5 U.S.C. 552) and the Privacy Act (5 U.S.C 552a). Records from this system of records may be disclosed to the Department of Justice to determine whether disclosure of these records is required by the Freedom of Information Act.
2. A record from this system of records may be disclosed, as a routine use, in the course of presenting evidence to a court, magistrate, or administrative tribunal, including disclosures to opposing counsel in the course of settlement negotiations.
3. A record in this system of records may be disclosed, as a routine use, to a Member of Congress submitting a request involving an individual, to whom the record pertains, when the individual has requested assistance from the Member with respect to the subject matter of the record.
4. A record in this system of records may be disclosed, as a routine use, to a contractor of the Agency having need for the information in order to perform a contract. Recipients of information shall be required to comply with the requirements of the Privacy Act of 1974, as amended, pursuant to 5 U.S.C. 552a(m).
5. A record related to an International Application filed under the Patent Cooperation Treaty in this system of records may be disclosed, as a routine use, to the International Bureau of the World Intellectual Property Organization, pursuant to the Patent Cooperation Treaty.
6. A record in this system of records may be disclosed, as a routine use, to another federal agency for purposes of National Security review (35 U.S.C. 181) and for review pursuant to the Atomic Energy Act (42 U.S.C. 218(c)).
7. A record from this system of records may be disclosed, as a routine use, to the Administrator, General Services, or his/her designee, during an inspection of records conducted by GSA as part of that agency's responsibility to recommend improvements in records management practices and programs, under authority of 44 U.S.C. 2904 and 2906. Such disclosure shall be made in accordance with the GSA regulations governing inspection of records for this purpose, and any other relevant (i.e., GSA or Commerce) directive. Such disclosure shall not be used to make determinations about individuals.
8. A record from this system of records may be disclosed, as a routine use, to the public after either publication of the application pursuant to 35 U.S.C. 122(b) or issuance of a patent pursuant to 35 U.S.C. 151. Further, a record may be disclosed, subject to the limitations of 37 CFR 1.14, as a routine use, to the public if the record was filed in an application which became abandoned or in which the proceedings were terminated and which application is referenced by either a published application, an application open to public inspection or an issued patent.
9. A record from this system of records may be disclosed, as a routine use, to a Federal, State, or local law enforcement agency, if the USPTO becomes aware of a violation or potential violation of law or regulation.

Notice of Allowability	Application No. 13/532,546	Applicant(s) STROBER, DAVID	
	Examiner DARRIN HOPE	Art Unit 2173	AIA (First Inventor to File) Status No

-- The MAILING DATE of this communication appears on the cover sheet with the correspondence address--

All claims being allowable, PROSECUTION ON THE MERITS IS (OR REMAINS) CLOSED in this application. If not included herewith (or previously mailed), a Notice of Allowance (PTOL-85) or other appropriate communication will be mailed in due course. **THIS NOTICE OF ALLOWABILITY IS NOT A GRANT OF PATENT RIGHTS.** This application is subject to withdrawal from issue at the initiative of the Office or upon petition by the applicant. See 37 CFR 1.313 and MPEP 1308.

1. ☒ This communication is responsive to *the amendments filed on 01/13/2017*.
   ☐ A declaration(s)/affidavit(s) under **37 CFR 1.130(b)** was/were filed on_____.
2. ☐ An election was made by the applicant in response to a restriction requirement set forth during the interview on _____; the restriction requirement and election have been incorporated into this action.
3. ☒ The allowed claim(s) is/are *2,4-8,10-13,15,16 and 26-33*. As a result of the allowed claim(s), you may be eligible to benefit from the **Patent Prosecution Highway** program at a participating intellectual property office for the corresponding application. For more information, please see http://www.uspto.gov/patents/init_events/pph/index.jsp or send an inquiry to PPHfeedback@uspto.gov.
4. ☐ Acknowledgment is made of a claim for foreign priority under 35 U.S.C. § 119(a)-(d) or (f).

   Certified copies:

   a) ☐ All b) ☐ Some *c) ☐ None of the:
   1. ☐ Certified copies of the priority documents have been received.
   2. ☐ Certified copies of the priority documents have been received in Application No. _____ .
   3. ☐ Copies of the certified copies of the priority documents have been received in this national stage application from the International Bureau (PCT Rule 17.2(a)).

   * Certified copies not received: _____.

Applicant has THREE MONTHS FROM THE "MAILING DATE" of this communication to file a reply complying with the requirements noted below. Failure to timely comply will result in ABANDONMENT of this application.
THIS THREE-MONTH PERIOD IS NOT EXTENDABLE.

5. ☐ CORRECTED DRAWINGS (as "replacement sheets") must be submitted.
   ☐ including changes required by the attached Examiner's Amendment / Comment or in the Office action of Paper No./Mail Date _____.

   Identifying indicia such as the application number (see 37 CFR 1.84(c)) should be written on the drawings in the front (not the back) of each sheet. Replacement sheet(s) should be labeled as such in the header according to 37 CFR 1.121(d).
6. ☐ DEPOSIT OF and/or INFORMATION about the deposit of BIOLOGICAL MATERIAL must be submitted. Note the attached Examiner's comment regarding REQUIREMENT FOR THE DEPOSIT OF BIOLOGICAL MATERIAL.

Attachment(s)

1. ☒ Notice of References Cited (PTO-892)
2. ☒ Information Disclosure Statements (PTO/SB/08), Paper No./Mail Date 07/28/2016
3. ☐ Examiner's Comment Regarding Requirement for Deposit of Biological Material
4. ☐ Interview Summary (PTO-413), Paper No./Mail Date _____ .
5. ☒ Examiner's Amendment/Comment
6. ☒ Examiner's Statement of Reasons for Allowance
7. ☐ Other _____.

/TADEESE HAILU/ Primary Examiner, Art Unit 2173	/DARRIN HOPE/ Examiner, Art Unit 2173

DETAILED ACTION

1. The present application is being examined under the pre-AIA first to invent provisions. This Office Action is responsive to the communications filed on 13 January 2017. Claims 2, 4-8, 10-13, 15-16, 26-33 are pending.

EXAMINER'S AMENDMENT

2. Authorization for this examiner's amendment was given in a telephone interview with Richard Wong (Reg. No. 73,259) on April 28, 2017.

3. Amend claims as follows:

12. (Currently Amended) The method of claim [[3]] 28, wherein the display host retrieves the specified first media player from a content provider via the Internet.

29. (Currently Amended) The method of claim 28, wherein the first universal command and the second universal command are not specific to the first media player.

4. An examiner's amendment to the record appears below. Should the changes and/or additions be unacceptable to applicant, an amendment may be filed as provided by 37 CFR 1.312. To ensure consideration of such an amendment, it MUST be submitted no later than the payment of the issue fee.

Examiner's Statement of reason of Allowance

5. Claims 2, 4-8, 10-13, 15-16, 26-33 are allowed.

6. The following is an examiner's statement of reasons for allowance:

The present invention is directed to a method and system for presenting content. The prior art made record fails to anticipate or make the claimed invention.

The prior art, with respect to claim 28, fails to teach or suggest, alone or combined, "establishing a first communications link between a display host and a switchboard server system, and a second communications link between the display host and a display device, wherein the display host is operable to execute multiple instances of a browser each of which operates as a swappable media player, wherein each instance of the swappable media player is operable to retrieve and load any of a plurality of different media players needed to play specified content; receiving, at the switchboard server system, a first message originating from a handheld Internet-enabled personal computing device distinct from the display host and the switchboard server system, wherein the first message comprises a unique identifier associated with the display device and a first session opened using a first instance of the swappable media player, and a first universal command instructing that first content be played in the first session using a specified first media player of the media players, converting, using the switchboard server system, the first universal command into a corresponding first converted code specific to the specified first media player to control playing of the first content on the specified first media player; receiving, at the display host, the first converted code and the unique identifier from the switchboard server system; in response to receiving the first converted code and the unique identifier, retrieving and loading, by the display host, the specified first media player using the first instance of the swappable media player; playing, at the display host, the first content in the first session using the specified first media player by executing the first converted code; causing, by the display host, a presentation of the first content to be mirrored onto the virtual client residing on the display device; receiving, at the switchboard server system, a second message originating from the handheld Internet-enabled personal computing device, wherein the second message comprises the unique identifier and a second universal command identifying a particular play control to be performed with respect to the first content

being played in the first session, wherein the second universal command is different than the first universal command; converting, using the switchboard server system, the second universal command into a corresponding second converted code specific to the specified first media player to perform the particular play control; receiving, at the display host the second converted code and the unique identifier from the switchboard server system; executing, by the display host, the second converted code to perform the particular play control with respect to the first content being played in the first session that is mirrored onto the virtual client residing on the display device" as recited in claim 28. Claims 2, 4-8, 10-12, 26-27, and 29 are dependent either directly or indirectly upon claim 28, and for at least the same reasons are allowed.

Claim 13 has been amended to recite similar limitations as claim 28, and for at least the same reasons as discussed above, claim 13 is allowed. Claims 15 and 16 depend from claim 13 and, for at least the same reasons, are allowed.

Independent claim 30 is allowable for at least the same reasons as discussed above with respect to claim 28. Additionally, the prior art fails to teach or suggest, alone or combined, a "switchboard server system" that can receive a "universal command" from a "first personal computing device," and convert the "universal command" into a "first portion of code *specific to first media player*" on a "first instance of [a] browser" as disclosed in claim 30. Claims 31-33 are dependent either directly or indirectly upon claim 30, and for at least the same reasons are allowed.

7. Any comments considered necessary by applicant must be submitted no later than the payment of the issue fee and, to avoid processing delays, should preferably accompany the issue fee. Such submissions should be clearly labeled "Comments on Statement of Reasons for Allowance."

Any inquiry concerning this communication or earlier communications from the examiner should be directed to DARRIN HOPE whose telephone number is (571)270-5079. The examiner can normally be reached on M-TH - 7-4:30, F - 7-3:30, Alt. Friday Off.

Examiner interviews are available via telephone, in-person, and video conferencing using a USPTO supplied web-based collaboration tool. To schedule an interview, applicant is encouraged to use the USPTO Automated Interview Request (AIR) at http://www.uspto.gov/interviewpractice.

If attempts to reach the examiner by telephone are unsuccessful, the examiner's supervisor, Kieu D. Vu can be reached on (571)272-4057. The fax phone number for the organization where this application or proceeding is assigned is 571-273-8300.

Information regarding the status of an application may be obtained from the Patent Application Information Retrieval (PAIR) system. Status information for published applications may be obtained from either Private PAIR or Public PAIR. Status information for unpublished applications is available through Private PAIR only. For more information about the PAIR system, see http://pair-direct.uspto.gov. Should you have questions on access to the Private PAIR system, contact the Electronic Business Center (EBC) at 866-217-9197 (toll-free). If you would like assistance from a USPTO Customer Service Representative or access to the automated information system, call 800-786-9199 (IN USA OR CANADA) or 571-272-1000.

/DARRIN HOPE/
Examiner, Art Unit 2173

/TADEESE HAILU/
Primary Examiner, Art Unit 2173

Notice of References Cited	Application/Control No. 13/532,546	Applicant(s)/Patent Under Reexamination STROBER, DAVID	
	Examiner DARRIN HOPE	Art Unit 2173	Page 1 of 1

U.S. PATENT DOCUMENTS

*		Document Number Country Code-Number-Kind Code	Date MM-YYYY	Name	CPC Classification	US Classification
*	A	US-2012/0054616 A1	03-2012	Mittal; Millind	G06F17/30899	715/722
	B	US-				
	C	US-				
	D	US-				
	E	US-				
	F	US-				
	G	US-				
	H	US-				
	I	US-				
	J	US-				
	K	US-				
	L	US-				
	M	US-				

FOREIGN PATENT DOCUMENTS

*		Document Number Country Code-Number-Kind Code	Date MM-YYYY	Country	Name	CPC Classification
	N					
	O					
	P					
	Q					
	R					
	S					
	T					

NON-PATENT DOCUMENTS

*		Include as applicable: Author, Title Date, Publisher, Edition or Volume, Pertinent Pages)
	U	
	V	
	W	
	X	

*A copy of this reference is not being furnished with this Office action. (See MPEP § 707.05(a).)
Dates in MM-YYYY format are publication dates. Classifications may be US or foreign.

EAST Search History

EAST Search History (Prior Art)

Ref #	Hits	Search Query	DBs	Default Operator	Plurals	Time Stamp
L1	200	("8595342" "20100138744" "20090106357" "20080256378" "20020161797" "20100115119" "20090275403" "20130165164" "20090061841" "8631407" "8622839" "8588824" "20090282245" "20090251409" "20100313135" "8909296" "20120084653" "20110296478" "20070294292" "7996566" "7716376" "7665115" "20120158511" "8876599" "20080168568" "20080175569" "8162753" "8918812" "20110125712" "8397266" "20090177966" "20120271688" "8755521" "7849160" "20080301189" "20100118200" "8026805" "20100121693" "20070294621" "20040268400" "8517829" "20040045040" "20090133067" "8910200" "7627808" "20040252400" "7975312" "8020185" "20080114861" "7632186" "8025572" "8556722" "20040239753" "20090228897" "20070011713" "20120222064" "8069414" "8352371" "7529831" "20060173974" "20080181575" "20100177122" "20070003224" "20120166950" "20110035466" "7809790" "8175638" "7984097" "8185625" "20110258623" "20080313402" "8028064" "20070033295" "20100281508" "8055781" "20050022127" "7962548" "8909740" "8122236" "20090109339" "8046672" "7565429" "20100228975" "20070276865" "9021370" "20100332983" "20120030726" "8806340" "20070078552" "20070169087" "20040015398" "8131993" "20080120652" "20060014585" "20050034151" "8909776" "20050019015" "20060250282" "20090190902" "20080319856" "6859838" "8060407" "7949333" "8566301" "20070265073" "20030061305" "7890599" "20070166683" "8244172" "20070100833" "8931105" "20060287021" "8752083" "20110307782" "20100325549" "8062134" "8374488" "20050091107" "8435115" "20110113354" "20130167027" "20110055026" "7787904" "20090204639" "8724696" "8949376" "20090093302" "20090176572" "7975021" "7975310" "20090285548" "7904628" "8016670" "20030182139" "20080118231" "8229856" "20100169509" "7934010" "8892988" "8209396" "7824268" "8702518" "8614625" "7460765" "20080194331" "20080180302" "8499241" "20110150432" "7739596" "20100325543" "8199718" "20110158606"	US-PGPUB; USPAT	OR	OFF	2017/04/28 17:16

		"8435121" "7426537" "7761602" "20080281689" "20040051812" "8506405" "20120215646" "7892095" "20110158610" "7590752" "20130232420" "7574691" "20050210101" "8990673" "20100235741" "8756333" "7369752" "20060182421" "8463924" "20030079038" "20060068861" "8332529" "20100287308" "20100119215" "7460668" "20040133908" "8392452" "8190706" "20070117635" "20080195474" "20080148328" "7058284" "20100076578" "20060020825" "20100150520" "20040225564" "8379668" "20110282896" "20090249222" "20070239849" "20100131978" "20100180010" "20020129089" "20110022471" "20110307785" "20040064518" "6904566" "8392959").pn.				
L2	200	("8112490" "8695030" "7233668" "20060034581" "20070239611" "20080184117" "7382879" "20030225834" "8112504" "20110041060" "20090228569" "8255527" "8285404" "20020116517" "20090176568" "20120239510" "7991156" "7966411" "20090216814" "20070217716" "8968093" "20100138879" "20090307658" "20020065925" "8155714" "8265456" "7861312" "20100122165" "20090327035" "20080118063" "20070117617" "8868785" "20120251076" "8473628" "20120072543" "20060101487" "20110320402" "20090210897" "20020141741" "8161275" "20110058675" "7836511" "8112711" "20080270903" "20080005348" "20090307092" "8117323" "20080129864" "20100232771" "8938674" "20120050012" "20130125013" "7789758" "20090082095" "8429224" "20040183756" "20060080702" "20080150485" "20030233349" "9026913" "8185626" "20040237107" "20050062888" "20070150963" "20100235744" "20090327969" "7801478" "8688991" "8219911" "20090326689" "7917932" "20090228738" "20060168351" "20110055702" "8123599" "20070294773" "7867093" "20100077463" "7941477" "7721103" "20100297934" "20120311043" "20060136964" "8429516" "20030137531" "8015167" "8566442" "7921222" "20080263219" "8244707" "6884172" "8522299" "20140006450" "20090024927" "8954596" "8538564" "20040003102" "20070171903" "20060026162" "20100104269" "6973475" "20120158524" "20040085485" "20100054715" "20040133657" "8249414" "8000690" "20060159366" "20080260295" "20070060312" "20060088228" "20090233705" "20110184881" "20090164902" "20090024923" "8229796" "7590750" "20020133247" "20070191108" "7653928" "7496277" "7278102" "20100319017" "20090060452" "20090094376" "8904455" "20080235142"	US-PGPUB; USPAT	OR	OFF	2017/04/28 17:16

		"20080031600" "8275681" "8806027" "20120203891" "8228670" "20060195909" "8332530" "20110179010" "20110138018" "8734254" "7870282" "20110179357" "20080109550" "20100275221" "7987483" "20100217993" "8122004" "20080071950" "20090193153" "7660558" "20060136577" "20060136572" "20060015911" "20090327561" "20100076827" "20070288715" "20020186843" "20070105588" "20080077679" "20080243279" "8880491" "20090282020" "20080212943" "20050153776" "20110191796" "20070075127" "8285812" "20100306152" "8977107" "8918737" "8650283" "20060125295" "7272794" "20060020968" "20100131671" "8301596" "8402494" "20070239839" "8671440" "8632408" "20110145859" "20070190983" "7433922" "20100105330" "20110004517" "20060293769" "20090288076" "20030052913" "20100056268" "20050182726" "7218360" "8422858" "7627645" "20100131848" "20020138641" "20100211466" "20100198982" "7458894" "20080232763" "7922586" "20060182420" "7765326" "20100169780").pn.				
L3	200	("20090106659" "8290604" "20080288770" "20090327448" "20100023578" "8190760" "20070226384" "20070048719" "7346687" "9063638" "20090240786" "20090240830" "8230341" "8943409" "20050044189" "20110208506" "8307390" "20080146342" "8775938" "20090319599" "20090240828" "7101284" "8244663" "20100026912" "20110055864" "20100070355" "20090098943" "20080084400" "7647560" "20100150105" "20090240768" "20100082835" "20060265637" "8029364" "8868763" "7500916" "20090171715" "20070168287" "20120220222" "20050091597" "20050251732" "20110176555" "20080273077" "20030167318" "8731380" "7433546" "8949450" "9063941" "8370520" "20090106315" "7050124" "20080046948" "20080120501" "8923325" "20070282972" "7115034" "20080249986" "20070192806" "8137200" "20070294772" "8001418" "7904580" "20060019747" "7711791" "8190674" "20080096663" "20080301465" "8554938" "20090327941" "7908415" "8346540" "20040242224" "20060167997" "8281332" "20090319557" "20080154404" "7673083" "20090240827" "20080189390" "20060020724" "20120076197" "9064369" "20110185378" "20060020901" "20110265018" "20100085857" "20110111862" "7882563" "20060277098" "20080281675" "20090198358" "20040148399" "20050286546" "20070201502" "7519911" "20090106258" "20100180201" "7326117" "20020065074" "20080181573" "20090106104"	US-PGPUB; USPAT	OR	OFF	2017/04/28 17:16

		"20060245742" "20060075427" "7769903" "8151259" "20050175324" "20090132924" "20140289623" "8626830" "20090327341" "6024643" "20100131613" "20040103300" "20070155310" "20080162668" "6908390" "8140973" "8209385" "7917645" "7480727" "20070204003" "9002885" "20090049074" "20050169467" "7761816" "20070298840" "20050096125" "20100205049" "7219308" "20040133914" "20030126035" "20080021957" "20050278256" "20090290850" "20080120666" "20080120656" "7043479" "8190704" "20070118606" "20080077483" "8150937" "20050078944" "20120254456" "20110145879" "20100235438" "6939233" "20110271227" "20060292537" "7421656" "8370878" "20030097379" "20060154729" "20070282898" "7426637" "8984626" "20060206492" "20100287580" "7056217" "20080034029" "6816883" "20130158690" "20100132005" "20100105361" "20060206493" "20080201658" "20100293389" "7483958" "7313591" "20070186003" "8972860" "5899810" "20120054615" "20140289622" "20050193017" "20080170477" "8856118" "7895311" "20110246616" "20090282057" "6725258" "20090287790" "20090325712" "20100138761" "20120059847" "8015200" "20110106283" "8667544" "20100057928" "9009066" "20100131104" "20050123135" "7958377" "20100325646" "8190751" "20090276324" "6800031" "20090209350" "8606848" "8931010" "6106395").pn.				
L4	200	("8078665" "6990512" "7860996" "6834308" "20070011264" "7316033" "8355671" "20120251071" "7739584" "8271333" "7899808" "8578502" "20060112144" "20040220879" "8202166" "20100281174" "20040230655" "8571936" "8275746" "20070250193" "6942574" "7194235" "20070269030" "20060092938" "8561202" "8886762" "7882435" "8321905" "20100281534" "8713304" "8706160" "20050125838" "20050111663" "8918806" "20110099444" "8626952" "20080276272" "20100235542" "20090150760" "8140407" "7644172" "20120072451" "8275880" "7415711" "20110072078" "7426329" "20090082110" "8239544" "20100254674" "8369249" "20110209063" "8849701" "8707288" "7695369" "20070294546" "8990119" "8515063" "7962751" "8875206" "8302005" "8266707" "7433930" "20130167005" "20090282076" "20090185688" "8041401" "20130272681" "8150729" "20100131675" "20110170842" "7886069" "20100317443" "7570761" "20090209205" "7818321" "20080028023" "20050005146" "20090043870" "20090083629" "7623740" "20100172635" "20050179685" "20100077435" "20090124329" "8087091" "7590711"	US-PGPUB; USPAT	OR	OFF	2017/04/28 17:16

		"8589779" "20100058377" "20090239573" "20050102379" "7155436" "20120017236" "20090106639" "20040148362" "8943545" "8806341" "20120130971" "6597891" "20060129490" "20080256463" "20060258419" "20120071237" "20070143493" "7975062" "8884886" "8107626" "8683516" "8280223" "8315950" "20100100636" "20110047247" "8612623" "7827298" "20040103297" "20020147699" "20100138746" "7178161" "8128498" "8503861" "20070156679" "20100106879" "8463875" "20080147558" "8704854" "20070100756" "20110010630" "20030132953" "8774951" "20010020944" "8047908" "8340795" "20110087603" "9028329" "20080320531" "7500007" "8376845" "20090113775" "7517282" "8375140" "7673062" "20050186998" "20100247062" "8219711" "8892634" "8346067" "8066566" "8977710" "20100199084" "9049494" "20090006524" "20030151618" "9067150" "20030120943" "20070186246" "20060020890" "8477143" "20130027314" "20080109844" "20090299725" "6587127" "8775655" "8246454" "20050172121" "7921446" "20090158382" "20070016865" "20090099671" "7686693" "20070094405" "20110161509" "8428257" "20070300155" "7155609" "20060069797" "20080155635" "7031931" "20100157978" "7881564" "20100283889" "7660416" "8489760" "8015491" "7593686" "7802095" "7765423" "20110069936" "20070100904" "20080046262" "20100094728" "8127036" "8868464" "20060146770" "20070136778" "7699706" "7343414" "20090282078" "20080301317" "7607582" "7716283" "7747703").pn.				
L5	200	("20090303197" "8301694" "20080059533" "20120036585" "8990104" "7930419" "20090106793" "20080165176" "20040186993" "8020099" "8234715" "8417096" "20060179109" "20090282158" "20090125812" "20080189752" "20110185393" "7890431" "20050097623" "20110276335" "7840631" "8241129" "20100257567" "20080120561" "20030188175" "8108642" "20060206340" "20080235752" "8328642" "20090220090" "20090091578" "8155505" "7565036" "8977768" "20110319169" "20080162358" "20070204011" "7956848" "7478084" "8239495" "8510615" "20110072348" "20060069651" "7465231" "20020013897" "8250663" "20100004993" "20080288590" "20070067315" "7995756" "20090058822" "7631330" "8438656" "20110008016" "20050172122" "20090280905" "8628422" "8475279" "20100281544" "20080222258" "8370455" "20070006268" "20110170004" "20040165006" "7621814" "7031473" "20070288966" "20110184744" "8689269"	US-PGPUB; USPAT	OR	OFF	2017/04/28 17:16

		"20100241855" "20080250238" "7840769" "20090097643" "20080071834" "20080216134" "20060205516" "20100202764" "20040140997" "20060020998" "8568238" "20040242269" "20050149969" "8935320" "8533284" "20110145562" "8769614" "20060288040" "8931104" "20030158813" "7873706" "8935242" "20110112915" "7464272" "20040234253" "20080244003" "20060059095" "9033785" "8655266" "8112810" "8523663" "20110270742" "8365235" "20040086120" "20090222392" "8527525" "8260933" "20110111854" "8616970" "8407146" "8417937" "20080282083" "8112815" "20100100915" "20040240842" "20100023849" "20070055743" "8122248" "20100332298" "8393967" "20090013253" "20060161621" "20100057779" "8209041" "20070209005" "20070127523" "7739715" "20070239546" "20100041470" "8903895" "20100064053" "8090659" "20020169797" "20080155109" "20060019751" "20110125755" "20050025465" "20080250239" "20120184349" "20090070267" "8386621" "20110225302" "20120150999" "20040236945" "20060256130" "8571935" "20080097632" "7555124" "20060114787" "9065683" "20100318809" "20100228758" "8417797" "8108671" "20050261062" "7578002" "6881148" "7743009" "8607143" "8117328" "20120066715" "8621338" "20050146534" "6948131" "20090117890" "20100099491" "20070230910" "20080009344" "7257309" "20100293581" "7676436" "20040267952" "20070088806" "7822866" "8272956" "9038116" "20070265979" "8267793" "20110234924" "8046689" "9077858" "8244315" "20050015551" "7702590" "8667299" "20030236907" "20050221882" "8122037" "20090063975" "20050015807" "8777753" "20020188760" "20060095472" "20090055510" "8055779" "20060223606" "20060223607" "20070124791" "20090186700" "20080176658" "20080193100").pn.				
L6	200	("20080098101" "8112539" "8543720" "20070273714" "8200629" "7708635" "20100273553" "7721032" "20060018205" "20060211471" "8117550" "9015225" "8046586" "20090287324" "20110072081" "20060149678" "8510769" "20060223608" "8290929" "20080031592" "20080133938" "7590659" "20040123103" "7707614" "8606071" "20090070673" "20060149632" "20080101604" "20060111188" "8000581" "8285118" "8266214" "20080134297" "8260858" "20060100009" "20080229353" "7753788" "20100146145" "20050081155" "20090276313" "20120017150" "20060240890" "20110173163" "20080160910" "20110053693"	US-PGPUB; USPAT	OR	OFF	2017/04/28 17:16

		"20080005801" "20110197129" "20030120541" "20030186745" "20100325660" "8745388" "20060218195" "8364011" "20090063974" "20070156855" "20110119149" "20080148349" "20090124380" "7647614" "20110167140" "20060123131" "8775659" "8914360" "20090163281" "8522300" "20110035462" "7769829" "8417827" "20090323260" "20040133794" "20080046599" "7499863" "8321401" "8060638" "20070220580" "20090013059" "20090119720" "7870385" "8544050" "7610394" "8056109" "20090234476" "20060156412" "20070238499" "6372974" "20060217174" "9037466" "20110029386" "8460109" "8769558" "20080281448" "20100325239" "20090182889" "20080317441" "20080120347" "8775314" "20040078357" "20080155129" "20100114846" "20130282800" "20070243925" "20040187027" "8549097" "20080235580" "20090271706" "20110320628" "20090007188" "20010016869" "20100281093" "7020704" "8789086" "20100325238" "20100011054" "20040244031" "9078049" "20110154173" "20070185972" "20100167823" "20090012935" "7956272" "8433812" "7536474" "7240093" "20070168463" "20050204126" "8083591" "7054888" "8611428" "20100100444" "20070297755" "6452609" "20110176786" "8627205" "7278920" "20070099703" "20060242259" "20130163953" "20080103974" "7386798" "8185579" "20090304359" "20060025220" "8239504" "7509178" "20070204115" "7506019" "20100185775" "20050080743" "8779266" "20080208378" "7089425" "20080004978" "20080159724" "20090177303" "20080147873" "20050181878" "8358273" "8644503" "8348759" "7735012" "7779357" "20100315549" "7519667" "20070213107" "8826445" "8812600" "20070066404" "8506402" "20060029093" "20090131141" "20070250849" "20090228578" "20090193474" "20110106962" "6330593" "7584353" "20090006963" "20060021057" "20070149281" "7803052" "20070011279" "20070192428" "8805830" "20050155068" "8218764" "6816909" "7107045" "7343347" "8565577" "8874436" "20020104096" "20080091529" "8752199" "7310729" "20100049741" "20100211968" "20090282093" "20070271366" "20090282077" "8019200").pn.				
L7	200	("7493289" "20050245317" "6679777" "7475155" "8818169" "8464163" "7941582" "8763058" "20090228544" "20080026732" "20040068536" "20020069412" "7136874" "20050013589" "6154773" "8156046" "20070167216" "8464164" "20090254827" "20090282050" "20060287054" RE41331	US-PGPUB; USPAT	OR	OFF	2017/04/28 17:16

		"8655953" "20090182445" "20090172542" "8005419" "7985134" "8738615" "7338372" "8019885" "20040248561" "20130212222" "20060031257" "20100184517" "7647297" "9003050" "20060288165" "20080234043" "20080132311" "20080169930" "20100088602" "20120071244" "7930369" "8018455" "20070244880" "9003455" "20070283449" "8970668" "7783703" "20130163580" "8805939" "8589580" "7979557" "8046790" "20110087600" "20080109851" "8506404" "20060179048" "20090157500" "20100075750" "7444388" "8001471" "8943210" "20100042235" "7503006" "8973153" "20100138581" "20100071076" "20100100818" "20110145428" "6944185" "20070191008" "8799408" "20110135283" "8409010" "20040033821" "20110067066" "20110064378" "20120194734" "20110067099" "20070180383" "7558870" "8605097" "7938727" "20120203830" "20090227375" "20090077469" "8402155" "6199076" "20110064377" "20090005141" "7796190" "20060168150" "20130024539" "20110066489" "20100293598" "8090606" "20090265750" "20110137976" "20110066942" "8255331" "20050216417" "20070050458" "20110066944" "20110066663" "8239559" "8181115" "20110150414" "20120246585" "20040254960" "20070204057" "20080103976" "20090204541" "8233366" "20090290710" "20070248328" "20080183840" "20060153040" "6801964" "20050183017" "6856990" "20090307199" "8631351" "20140032636" "8086651" "20040098754" "8190680" "20110181781" "7177950" "7809789" "20110064385" "8122474" "8814692" "7806408" "7469346" "20110063508" "20080027992" "7904964" "7281214" "8078685" "20060188096" "20110064386" "20110093891" "20060002681" "20080184127" "20070243934" "20090215531" "20120042047" "20090041244" "8069262" "20090305788" "7966374" "20070262952" "8348762" "8025569" "20050096005" "7877776" "20090319925" "20110063317" "20080184359" "9021060" "20080212944" "20110246657" "7753797" "20040128364" "20100262833" "8639086" "7734688" "20080086423" "20080288097" "20080222243" "7197049" "20120207441" "8645599" "20090193032" "20090069915" "8316300" "20080182510" "8180645" "8429696" "9003539" "20080160909" "20080189295" "20090205003" "8161562" "20070276866" "20070191101" "20110176790" "20120323349" "8683337" "20080184317" "20080160908" "8482673" "7702805" "20130097302" "20080175566" "20070006079" "8094168" "20070094276" "8777737").pn.				

L8	200	("20090210415" "20110099286" "20100104255" "20080180401" "20080163302" "20100169455" "20040013416" "8088001" "20050278257" "6876901" "8244898" "20080182509" "20080182508" "20060217173" "20050172309" "20130022335" "20080187115" "20080162655" "20130022185" "20080168133" "20040022391" "8739234" "20080010372" "20070191102" "20100325544" "20070214182" "9049472" "20120047222" "20050066339" "20090158326" "20060259355" "8170468" "8485881" "20100087251" "20090275285" "20060095401" "20100023885" "7562394" "20100218208" "7941500" "20110125878" "20030188183" "20090181769" "20110004669" "20070245376" "20090300145" "20080178238" "8430745" "20090106442" "8303413" "20040168052" "20120042309" "20090150557" "20090025085" "20040240861" "7806761" "9081976" "20030216958" "20050188310" "20110035258" "20040267715" "7797442" "8117651" "20080062894" "7984377" "20060095471" "20100198732" "8020762" "20110099225" "7206766" "8202161" "20090088235" "20050135792" "20110105226" "20080276158" "20060015560" "20120251077" "8782269" "8282459" "7502471" "20030076345" "20090157553" "8038523" "20090300202" "7717783" "7617272" "8038520" "8775665" "20070006061" "20110289178" "8668590" "20050165849" "20020171760" "8615160" "7593744" "20070192445" "20090062015" "7462104" "8840475" "8621533" "20080081700" "20110207525" "20110055016" "8914603" "20040254956" "8197324" "20040078382" "8392600" "20040133467" "20040181490" "20070006078" "7877687" "20090225093" "20060164932" "20070248326" "20080305738" "6993509" "7837557" "8606942" "20110169913" "8032004" "20110197237" "7917643" "8602866" "8028038" "8078748" "20070033419" "20070198744" "20100169461" "20110296057" "20080130886" "20110035467" "8234385" "20110035668" "20090150918" "8086575" "20110302317" "8253649" "20090204481" "20080195692" "20080086494" "7699703" "20090327449" "20080288099" "9060187" "7343419" "20110112914" "20080137848" "20080049935" "8181110" "20100195977" "8230099" "20060111172" "20110090645" "20110231660" "20110213837" "8548946" "7228341" "7929551" "20020141582" "20070214234" "20080005171" "20080037781" "6463078" "20030078102" "7533061" "7797374" "20060155914" "20050252958" "20080109841"	US-PGPUB; USPAT	OR	OFF	2017/04/28 17:16

		"20120014558" "20050164793" "20050108320" "8370732" "8556724" "20080005179" "8775321" "6538665" "20110009051" "8051454" "8239359" "7300352" "8285809" "8287341" "20070174866" "20060280437" "8028073" "7010213" "20100125741" "7840984" "20060227673" "20060123058" "7878808" "20050071375" "8892761" "20040172481" "20060288111" "8066568" "20100185729" "8095566").pn.				
L9	200	("20060020879" "20060068907" "20080008439" "20030208300" "20030172033" "20050240588" "20110150430" "20110145726" "7241219" "20100083307" "20080274796" "8825468" "7881656" "20100110200" "20060008256" "20080117926" "20020169970" "8909023" "8468130" "7617278" "8893195" "20060239657" "20120030436" "20120030706" "7913157" "8150918" "7428572" "7611409" "20030237043" "6262724" "20080222520" "20080124054" "9021522" "8682145" "20090254607" "20110255842" "20090147952" "20060059526" "7686215" "7412459" "7702592" "20100223337" "8246468" "7871327" "7792925" "8485878" "20080155470" "7318196" "8167723" "8856641" "8543785" "20090118017" "8282484" "7946918" "20080178242" "20060128469" "20100094900" "8170123" "20060146772" "20120184362" "20050059378" "20110202842" "9009337" "8631334" "20100042920" "7753790" "20100191860" "7783773" "6192340" "20090117994" "20090234472" "7536355" "7966414" "8543095" "7925897" "20090182817" "20100082585" "20090193138" "8721448" "8090779" "20090300139" "20050017988" "7165219" "8175097" "20060211470" "20100077290" "20090163273" "7580526" "20090118001" "7841946" "20090118005" "20090115133" "20080127278" "8700739" "20070083467" "8688841" "8484563" "20020088011" "20040152054" "20080013274" "20040024580" "7113918" "20120124123" "6850256" "7559089" "20120233036" "7315984" "20080028170" "20060072046" "20080055314" "8516035" "20100121911" "8346762" "7706637" "8245142" "20120066768" RE45531 "20030115351" "20100056280" "8707181" "8874725" "20080155297" "20040078832" "20080214103" "20100023144" "8086902" "8522142" "20090093306" "8074083" "7491123" "20090325709" "9054891" "8301715" "7523507" "20060178187" "20100027966" "20090118006" "8056139" "8266637" "20100064332" "20080209487" "20100011392" "20070265091" "6908389" "20080094400" "20090222862" "20070100787" "8296675" "20100274664"	US-PGPUB; USPAT	OR	OFF	2017/04/28 17:16

		"8441338" "20100023893" "20060004778" "7797471" "20080090659" "7962640" "20070247551" "7690992" "20090132453" "8262466" "20080201375" "8438602" "20090025024" "8068716" "20070191104" "7069590" "20030083940" "7529870" "7814220" "7949810" "20110195790" "8317618" "8151199" "20090216683" "7623502" "20090253476" "20110081127" "20100010648" "20120054616" "20080133611" "7401150" "20080219638" "20060072596" "8397305" "20080028037" "20100268680" "8352544" "20040148424" "20110138429" "8438297" "7529871" "20080288096" "7991268" "8069255" "8661464" "20090248672" "20090193338" "20090183207" "6996236" "8016677" "20030211889").pn.				
L10	200	("20070022464" "8926395" "20080082576" "7877532" "8631451" "8131865" "20030126211" "7526588" "7951000" "20080065992" "20060084488" "7786367" "8135891" "7458025" "8539525" "20070281768" "20090132712" "8292626" "8655146" "8407809" "20100247061" "20130254340" "8447421" "20110111859" "20050246654" "8224752" "20120066289" "20060159068" "20110067115" "8484721" "20070248311" "20090265549" "8082376" "20070162611" "20090296552" "7647277" "8387083" "8444485" "20070006064" "7725557" "20080033990" "20030093548" "8214545" "8687042" "20080287190" "7844661" "7976372" "6113495" "20090060182" "20070282969" "7779185" "20050273491" "9055194" "20090265557" "20090265793" "20090265789" "20120028714" "8122475" "20090265746" "8428421" "20060246984" "20080189354" "20090112839" "20090164034" "20110229107" "20100158101" "7778971" "20090287567" "8918195" "7340526" "20080177860" "20110072366" "8171194" "7941761" "20100146544" "20090275412" "20080115045" "20060177198" "20090070184" "20050026693" "20110087971" "7548948" "20070250870" "8381310" "20050075166" "7805051" "8135769" "8206224" "20070250781" "8838693" "20120041954" "20030009343" "20060029013" "20080270881" "20060293969" "7896743" "20050273553" "8171195" "20070011225" "7882356" "20060258446" "9071796" "7945636" "20100049719" "20100306428" "20120210216" "20090049385" "20120059884" "8571991" "8357046" "8271115" "7925300" "20120197419" "8131898" "20090325706" "20090132072" "20070245378" "20050060542" "7492769" "20100046917" "20090248802" "20100250761" "20080120389" "20110167170" "8196043" "7609835" "7110982" "8968077" "20080114645"	US-PGPUB; USPAT	OR	OFF	2017/04/28 17:16

		"8359657" "20110022519" "20100161091" "20100076958" "8458147" "20070021972" "8585501" "20030115146" "20080244644" "8060909" "20110238520" "20090210079" "8121952" "20060287099" "20070061497" "20120284421" "20060293991" "8112361" "8713443" "6241612" "20010042107" "7702723" "20080212945" "8099536" "7535465" "20080235286" "8555395" "20060287097" "20090158443" "8366531" "20070077784" "20100037320" "8307392" "7245817" "20080155057" "8544033" "20100287472" "20110041063" "20100154035" "7690043" "20080089548" "6846238" "20030231861" "8612643" "20090204738" "20110211114" "20090063277" "7581182" "20070006080" "6582310" "20090046838" "8275360" "20070011237" "8352996" "7536565" "20100064000" "20060209174" "7987148" "20020162106" "20070245377" "20080229215" "20070213111" "20070129140" "20090164032" "20100064055" "20100304860" "20120252557" "20120050185" "20090089846" "8694665" "8738787").pn.				
L11	200	("20050010952" "8731381" "20080235588" "20080146338" "8775647" "7698467" "8888592" "20080250061" "20080063353" "20090124387" "20120079605" "7756792" "7111240" "8682750" "6256268" "20090204244" "7616097" "20100014833" "7904537" "7469410" "20080201376" "8996409" "20110201388" "20050246458" "20110093877" "7783070" "20060135230" "20090088240" "20070111776" "20070168540" "7917477" "8554616" "20070067301" "7529872" "20080194175" "20110119586" "8155336" "20110126255" "20070004519" "7966362" "8233916" "6641481" "8341037" "8180895" "20020107802" "20110122063" "20090088257" "20120185530" "5911582" "20080147214" "20080307454" "7085845" "20090093311" "20090088258" "7441020" "7722467" "7991738" "8046428" "20080172413" "20130038702" "20060206581" "20070247794" "20090013347" "20030009770" "8086226" "8341282" "20070220111" "20100333129" "20110172013" "20060095848" "20030115147" "20070213857" "7707246" "7681238" "20060190410" "7730165" "20070006063" "8244896" "20100285858" "20050283791" "20120198088" "20090276068" "20080270532" "20090132377" "7681200" "20120042134" "20080254897" "6884170" "9061207" "20070026944" "20100235743" "20090282088" "20080254891" "7698301" "8321690" "20100010884" "20050076061" "8184943" "20020068525" "20110123175" "6990671" "20020194608" "20100088716" "8069232" "20080155634" "8376846"	US-PGPUB; USPAT	OR	OFF	2017/04/28 17:16

		"6364765" "8255552" "7789757" "8533259" "20030149668" "20120052941" "20080281943" "20110125298" "20100192188" "20070259710" "8243924" "20040064504" "20060242275" "20080254878" "8171410" "20070056013" "20130024951" "8348716" "8771066" "20080254892" "20020165923" "20090082104" "5957695" "8403757" "20090018682" "20080098301" "7761339" "20080102947" "20060218618" "7115035" "6622171" "20110188199" "7996775" "7765280" "20120166668" "8812673" "20070265093" "8739294" "20050276572" "20050180567" "20110219460" "8429123" "8944917" "20150205628" "20040193900" "7685210" "7526778" "20100005183" "8755919" "6748537" "20070185892" "20090281888" "8750115" "7877798" "20090198361" "20040128198" "8959154" "7603113" "20070204349" "6715126" "20080033725" "20030135465" "6385596" "8291004" "20070240030" "20040025185" "8341752" "8523673" "20100250669" "20100332723" "7990809" "20070230904" "8784196" "20110098109" "20060179153" "20070038567" "20120117193" "7757241" "20030190950" "8271022" "20090191855" "20030190951" "20050025466" "8296763" "20070066392" "8468567" "8132263" "20070082720" "5679075" "8544046" "20080096668" "20060204211" "20090222117" "8172677").pn.				
L12	200	("7729946" "20020069418" "8473739" "20050193209" "20030134678" "8065394" "7376414" "20060121965" "20110126113" "20100195975" "20120218381" "20100131977" "7085842" "7930367" "8412840" "20030103079" "7303473" "8285901" "7149772" "8560950" "20100251121" "8909729" "20120254364" "8271038" "20030185395" "8577420" "20060218294" "8930405" "20090082105" "20060085862" "20100253764" "20030112262" "8585502" "8628414" "20090113315" "4785472" "20090187825" "20080107405" "7881476" "20070067243" "8403748" "6903779" "20080155062" "20070250512" "20050015464" "7258614" "20100008650" "8855275" "8684748" "6868403" "20120021825" "20050039128" "7606118" "8234572" "20100113140" "20090085724" "7353270" "20060265503" "20120157199" "20130340012" "20030115598" "8379540" "20100312931" "6990497" "20100169464" "20070076547" "20090172820" "7707224" "20100036759" "6843724" "8843589" "20090222739" "20100325022" "7611408" "20100124404" "20060025216" "8152634" "8727882" "7997494" "20090094160" "8160495" "20050251807" "9043467" "6170060" "8706867" "8751343" "20080307463" "20080307462" "20080103977"	US-PGPUB; USPAT	OR	OFF	2017/04/28 17:16

		"20080205205" "20040209692" "20040140998" "7558463" "20080307456" "7454019" "7164075" "5788507" "20050212214" "7865745" "20080097915" "7165725" "20060265409" "8793256" "20080224988" "8959660" "8491391" "9043276" "7356575" "20100057470" "8131646" "20100312932" "20090136218" "20070232098" "8230004" "20070055728" "20050272504" "20080152316" "20080208379" "8291236" "7668438" "20100070385" "7299291" "20120197897" "7634605" "8768744" "8788078" "20100035692" "20140143687" "20070216600" "20110083074" "20070006062" "20110231658" "20060259930" "20090106847" "20090076898" "7734800" "20090062944" "7778980" "8756160" "20070093277" "20030043191" "20140259166" "20110231872" "20060190616" "7698178" "7086946" "20100049835" "7844498" "8468369" "8753199" "8731371" "20050262449" "20100125646" "8713026" "20110029873" "8622552" "20070067241" "8401187" "20040267899" "8230044" "20020112004" "20070087838" "20020138593" "8359591" "20020055386" "20120033140" "8393948" "20110181518" "20060230038" "20110028221" "7596582" "20120226780" "8353757" "20070299874" "7539307" "20060036488" "20070101361" "20020098885" "20100161825" "20080113614" "20040032348" "20100042654" "20090259926" "6888477" "20120210373" "20080288098" "20070055997" "20030084126" "8725063" "20060080741" "20070236482" "20140033025" "8996145" "20090117846" "20080176540" "7984511" "7636754" "20090100092" "20060041640" "7644173").pn.				
L13	100	("8429365" "20040259621" "8239595" "20110149158" "20020190876" "8608536" "7761414" "20100036748" "20090136029" "7113999" "8282479" "8930561" "7802004" "8225359" "7844722" "20080107170" "20060044951" "7796941" "7566274" "20090119169" "20050157600" "20110066776" "20110208336" "8469813" "8608537" "20040064835" "7613691" "20070291709" "8682722" "20060090122" "5839905" "8893022" "20090315670" "20070266123" "8774602" "20110317831" "20030217170" "20070237494" "20090061927" "20060059223" "9063755" "6692353" "8973083" "20060265667" "7160191" "20040117442" "6507727" "8055688" "20060232449" "20110295393" "7627343" "20110066775" "20020046095" "20040205811" "20050114205" "8413038" "8251811" "20130298154" "20090006695" "8595854" "7920901" "20090215540" "8120707" "20070132660" "8473976"	US-PGPUB; USPAT	OR	OFF	2017/04/28 17:16

		"20120062471" "20090093312" "20100287480" "20060117344" "7610310" "8364024" "9055315" "20080268959" "20080086689" "20070233295" "20060206561" "8458053" "20070006065" "20060123185" "20110066673" "20090319901" "20100269030" "7920856" "8419548" "7997582" "8386414" "20100169463" "20070260742" "20030061280" "20120192229" "8174827" "20060046851" "20080281685" "6253237" "8230097" "8632400" "7303470" "20080201751" "20080256563" "20080076495").pn.				
L14	2500	L1 L2 L3 L4 L5 L6 L7 L8 L9 L10 L11 L12 L13	US-PGPUB; USPAT	OR	OFF	2017/04/28 17:16
L15	200	("8595342" "20100138744" "20090106357" "20080256378" "20020161797" "20100115119" "20090275403" "20130165164" "20090061841" "8631407" "8622839" "8588824" "20090282245" "20090251409" "20100313135" "8909296" "20120084653" "20110296478" "20070294292" "7996566" "7716376" "7665115" "20120158511" "8876599" "20080168568" "20080175569" "8162753" "8918812" "20110125712" "8397266" "20090177966" "20120271688" "8755521" "7849160" "20080301189" "20100118200" "8026805" "20100121693" "20070294621" "20040268400" "8517829" "20040045040" "20090133067" "8910200" "7627808" "20040252400" "7975312" "8020185" "20080114861" "7632186" "8025572" "8556722" "20040239753" "20090228897" "20070011713" "20120222064" "8069414" "8352371" "7529831" "20060173974" "20080181575" "20100177122" "20070003224" "20120166950" "20110035466" "7809790" "8175638" "7984097" "8185625" "20110258623" "20080313402" "8028064" "20070033295" "20100281508" "8055781" "20050022127" "7962548" "8909740" "8122236" "20090109339" "8046672" "7565429" "20100228975" "20070276865" "9021370" "20100332983" "20120030726" "8806340" "20070078552" "20070169087" "20040015398" "8131993" "20080120652" "20060014585" "20050034151" "8909776" "20050019015" "20060250282" "20090190902" "20080319856" "6859838" "8060407" "7949333" "8566301" "20070265073" "20030061305" "7890599" "20070166683" "8244172" "20070100833" "8931105" "20060287021" "8752083" "20110307782" "20100325549" "8062134" "8374488" "20050091107" "8435115" "20110113354" "20130167027" "20110055026" "7787904" "20090204639" "8724696" "8949376" "20090093302" "20090176572" "7975021" "7975310" "20090285548" "7904628" "8016670" "20030182139" "20080118231" "8229856"	US-PGPUB; USPAT	OR	OFF	2017/04/28 17:17

		"20100169509" "7934010" "8892988" "8209396" "7824268" "8702518" "8614625" "7460765" "20080194331" "20080180302" "8499241" "20110150432" "7739596" "20100325543" "8199718" "20110158606" "8435121" "7426537" "7761602" "20080281689" "20040051812" "8506405" "20120215646" "7892095" "20110158610" "7590752" "20130232420" "7574691" "20050210101" "8990673" "20100235741" "8756333" "7369752" "20060182421" "8463924" "20030079038" "20060068861" "8332529" "20100287308" "20100119215" "7460668" "20040133908" "8392452" "8190706" "20070117635" "20080195474" "20080148328" "7058284" "20100076578" "20060020825" "20100150520" "20040225564" "8379668" "20110282896" "20090249222" "20070239849" "20100131978" "20100180010" "20020129089" "20110022471" "20110307785" "20040064518" "6904566" "8392959").pn.				
L16	200	("8112490" "8695030" "7233668" "20060034581" "20070239611" "20080184117" "7382879" "20030225834" "8112504" "20110041060" "20090228569" "8255527" "8285404" "20020116517" "20090176568" "20120239510" "7991156" "7966411" "20090216814" "20070217716" "8968093" "20100138879" "20090307658" "20020065925" "8155714" "8265456" "7861312" "20100122165" "20090327035" "20080118063" "20070117617" "8868785" "20120251076" "8473628" "20120072543" "20060101487" "20110320402" "20090210897" "20020141741" "8161275" "20110058675" "7836511" "8112711" "20080270903" "20080005348" "20090307092" "8117323" "20080129864" "20100232771" "8938674" "20120050012" "20130125013" "7789758" "20090082095" "8429224" "20040183756" "20060080702" "20080150485" "20030233349" "9026913" "8185626" "20040237107" "20050062888" "20070150963" "20100235744" "20090327969" "7801478" "8688991" "8219911" "20090326689" "7917932" "20090228738" "20060168351" "20110055702" "8123599" "20070294773" "7867093" "20100077463" "7941477" "7721103" "20100297934" "20120311043" "20060136964" "8429516" "20030137531" "8015167" "8566442" "7921222" "20080263219" "8244707" "6884172" "8522299" "20140006450" "20090024927" "8954596" "8538564" "20040003102" "20070171903" "20060026162" "20100104269" "6973475" "20120158524" "20040085485" "20100054715" "20040133657" "8249414" "8000690" "20060159366" "20080260295" "20070060312" "20060088228" "20090233705" "20110184881"	US-PGPUB; USPAT	OR	OFF	2017/04/28 17:17

		"20090164902" "20090024923" "8229796" "7590750" "20020133247" "20070191108" "7653928" "7496277" "7278102" "20100319017" "20090060452" "20090094376" "8904455" "20080235142" "20080031600" "8275681" "8806027" "20120203891" "8228670" "20060195909" "8332530" "20110179010" "20110138018" "8734254" "7870282" "20110179357" "20080109550" "20100275221" "7987483" "20100217993" "8122004" "20080071950" "20090193153" "7660558" "20060136577" "20060136572" "20060015911" "20090327561" "20100076827" "20070288715" "20020186843" "20070105588" "20080077679" "20080243279" "8880491" "20090282020" "20080212943" "20050153776" "20110191796" "20070075127" "8285812" "20100306152" "8977107" "8918737" "8650283" "20060125295" "7272794" "20060020968" "20100131671" "8301596" "8402494" "20070239839" "8671440" "8632408" "20110145859" "20070190983" "7433922" "20100105330" "20110004517" "20060293769" "20090288076" "20030052913" "20100056268" "20050182726" "7218360" "8422858" "7627645" "20100131848" "20020138641" "20100211466" "20100198982" "7458894" "20080232763" "7922586" "20060182420" "7765326" "20100169780").pn.				
L17	200	("20090106659" "8290604" "20080288770" "20090327448" "20100023578" "8190760" "20070226384" "20070048719" "7346687" "9063638" "20090240786" "20090240830" "8230341" "8943409" "20050044189" "20110208506" "8307390" "20080146342" "8775938" "20090319599" "20090240828" "7101284" "8244663" "20100026912" "20110055864" "20100070355" "20090098943" "20080084400" "7647560" "20100150105" "20090240768" "20100082835" "20060265637" "8029364" "8868763" "7500916" "20090171715" "20070168287" "20120220222" "20050091597" "20050251732" "20110176555" "20080273077" "20030167318" "8731380" "7433546" "8949450" "9063941" "8370520" "20090106315" "7050124" "20080046948" "20080120501" "8923325" "20070282972" "7115034" "20080249986" "20070192806" "8137200" "20070294772" "8001418" "7904580" "20060019747" "7711791" "8190674" "20080096663" "20080301465" "8554938" "20090327941" "7908415" "8346540" "20040242224" "20060167997" "8281332" "20090319557" "20080154404" "7673083" "20090240827" "20080189390" "20060020724" "20120076197" "9064369" "20110185378" "20060020901" "20110265018" "20100085857" "20110111862" "7882563" "20060277098"	US-PGPUB; USPAT	OR	OFF	2017/04/28 17:17

		"20080281675" "20090198358" "20040148399" "20050286546" "20070201502" "7519911" "20090106258" "20100180201" "7326117" "20020065074" "20080181573" "20090106104" "20060245742" "20060075427" "7769903" "8151259" "20050175324" "20090132924" "20140289623" "8626830" "20090327341" "6024643" "20100131613" "20040103300" "20070155310" "20080162668" "6908390" "8140973" "8209385" "7917645" "7480727" "20070204003" "9002885" "20090049074" "20050169467" "7761816" "20070298840" "20050096125" "20100205049" "7219308" "20040133914" "20030126035" "20080021957" "20050278256" "20090290850" "20080120666" "20080120656" "7043479" "8190704" "20070118606" "20080077483" "8150937" "20050078944" "20120254456" "20110145879" "20100235438" "6939233" "20110271227" "20060292537" "7421656" "8370878" "20030097379" "20060154729" "20070282898" "7426637" "8984626" "20060206492" "20100287580" "7056217" "20080034029" "6816883" "20130158690" "20100132005" "20100105361" "20060206493" "20080201658" "20100293389" "7483958" "7313591" "20070186003" "8972860" "5899810" "20120054615" "20140289622" "20050193017" "20080170477" "8856118" "7895311" "20110246616" "20090282057" "6725258" "20090287790" "20090325712" "20100138761" "20120059847" "8015200" "20110106283" "8667544" "20100057928" "9009066" "20100131104" "20050123135" "7958377" "20100325646" "8190751" "20090276324" "6800031" "20090209350" "8606848" "8931010" "6106395").pn.				
L18	200	("8078665" "6990512" "7860996" "6834308" "20070011264" "7316033" "8355671" "20120251071" "7739584" "8271333" "7899808" "8578502" "20060112144" "20040220879" "8202166" "20100281174" "20040230655" "8571936" "8275746" "20070250193" "6942574" "7194235" "20070269030" "20060092938" "8561202" "8886762" "7882435" "8321905" "20100281534" "8713304" "8706160" "20050125838" "20050111663" "8918806" "20110099444" "8626952" "20080276272" "20100235542" "20090150760" "8140407" "7644172" "20120072451" "8275880" "7415711" "20110072078" "7426329" "20090082110" "8239544" "20100254674" "8369249" "20110209063" "8849701" "8707288" "7695369" "20070294546" "8990119" "8515063" "7962751" "8875206" "8302005" "8266707" "7433930" "20130167005" "20090282076" "20090185688" "8041401" "20130272681" "8150729" "20100131675" "20110170842" "7886069" "20100317443" "7570761"	US-PGPUB; USPAT	OR	OFF	2017/04/28 17:17

		"20090209205" "7818321" "20080028023" "20050005146" "20090043870" "20090083629" "7623740" "20100172635" "20050179685" "20100077435" "20090124329" "8087091" "7590711" "8589779" "20100058377" "20090239573" "20050102379" "7155436" "20120017236" "20090106639" "20040148362" "8943545" "8806341" "20120130971" "6597891" "20060129490" "20080256463" "20060258419" "20120071237" "20070143493" "7975062" "8884886" "8107626" "8683516" "8280223" "8315950" "20100100636" "20110047247" "8612623" "7827298" "20040103297" "20020147699" "20100138746" "7178161" "8128498" "8503861" "20070156679" "20100106879" "8463875" "20080147558" "8704854" "20070100756" "20110010630" "20030132953" "8774951" "20010020944" "8047908" "8340795" "20110087603" "9028329" "20080320531" "7500007" "8376845" "20090113775" "7517282" "8375140" "7673062" "20050186998" "20100247062" "8219711" "8892634" "8346067" "8066566" "8977710" "20100199084" "9049494" "20090006524" "20030151618" "9067150" "20030120943" "20070186246" "20060020890" "8477143" "20130027314" "20080109844" "20090299725" "6587127" "8775655" "8246454" "20050172121" "7921446" "20090158382" "20070016865" "20090099671" "7686693" "20070094405" "20110161509" "8428257" "20070300155" "7155609" "20060069797" "20080155635" "7031931" "20100157978" "7881564" "20100283889" "7660416" "8489760" "8015491" "7593686" "7802095" "7765423" "20110069936" "20070100904" "20080046262" "20100094728" "8127036" "8868464" "20060146770" "20070136778" "7699706" "7343414" "20090282078" "20080301317" "7607582" "7716283" "7747703").pn.				
L19	200	("20090303197" "8301694" "20080059533" "20120036585" "8990104" "7930419" "20090106793" "20080165176" "20040186993" "8020099" "8234715" "8417096" "20060179109" "20090282158" "20090125812" "20080189752" "20110185393" "7890431" "20050097623" "20110276335" "7840631" "8241129" "20100257567" "20080120561" "20030188175" "8108642" "20060206340" "20080235752" "8328642" "20090220090" "20090091578" "8155505" "7565036" "8977768" "20110319169" "20080162358" "20070204011" "7956848" "7478084" "8239495" "8510615" "20110072348" "20060069651" "7465231" "20020013897" "8250663" "20100004993" "20080288590" "20070067315" "7995756" "20090058822" "7631330" "8438656" "20110008016"	US-PGPUB; USPAT	OR	OFF	2017/04/28 17:17

		"20050172122" "20090280905" "8628422" "8475279" "20100281544" "20080222258" "8370455" "20070006268" "20110170004" "20040165006" "7621814" "7031473" "20070288966" "20110184744" "8689269" "20100241855" "20080250238" "7840769" "20090097643" "20080071834" "20080216134" "20060205516" "20100202764" "20040140997" "20060020998" "8568238" "20040242269" "20050149969" "8935320" "8533284" "20110145562" "8769614" "20060288040" "8931104" "20030158813" "7873706" "8935242" "20110112915" "7464272" "20040234253" "20080244003" "20060059095" "9033785" "8655266" "8112810" "8523663" "20110270742" "8365235" "20040086120" "20090222392" "8527525" "8260933" "20110111854" "8616970" "8407146" "8417937" "20080282083" "8112815" "20100100915" "20040240842" "20100023849" "20070055743" "8122248" "20100332298" "8393967" "20090013253" "20060161621" "20100057779" "8209041" "20070209005" "20070127523" "7739715" "20070239546" "20100041470" "8903895" "20100064053" "8090659" "20020169797" "20080155109" "20060019751" "20110125755" "20050025465" "20080250239" "20120184349" "20090070267" "8386621" "20110225302" "20120150999" "20040236945" "20060256130" "8571935" "20080097632" "7555124" "20060114787" "9065683" "20100318809" "20100228758" "8417797" "8108671" "20050261062" "7578002" "6881148" "7743009" "8607143" "8117328" "20120066715" "8621338" "20050146534" "6948131" "20090117890" "20100099491" "20070230910" "20080009344" "7257309" "20100293581" "7676436" "20040267952" "20070088806" "7822866" "8272956" "9038116" "20070265979" "8267793" "20110234924" "8046689" "9077858" "8244315" "20050015551" "7702590" "8667299" "20030236907" "20050221882" "8122037" "20090063975" "20050015807" "8777753" "20020188760" "20060095472" "20090055510" "8055779" "20060223606" "20060223607" "20070124791" "20090186700" "20080176658" "20080193100").pn.				
L20	200	("20080098101" "8112539" "8543720" "20070273714" "8200629" "7708635" "20100273553" "7721032" "20060018205" "20060211471" "8117550" "9015225" "8046586" "20090287324" "20110072081" "20060149678" "8510769" "20060223608" "8290929" "20080031592" "20080133938" "7590659" "20040123103" "7707614" "8606071" "20090070673" "20060149632" "20080101604" "20060111188" "8000581" "8285118" "8266214" "20080134297"	US-PGPUB; USPAT	OR	OFF	2017/04/28 17:17

		"8260858" "20060100009" "20080229353" "7753788" "20100146145" "20050081155" "20090276313" "20120017150" "20060240890" "20110173163" "20080160910" "20110053693" "20080005801" "20110197129" "20030120541" "20030186745" "20100325660" "8745388" "20060218195" "8364011" "20090063974" "20070156855" "20110119149" "20080148349" "20090124380" "7647614" "20110167140" "20060123131" "8775659" "8914360" "20090163281" "8522300" "20110035462" "7769829" "8417827" "20090323260" "20040133794" "20080046599" "7499863" "8321401" "8060638" "20070220580" "20090013059" "20090119720" "7870385" "8544050" "7610394" "8056109" "20090234476" "20060156412" "20070238499" "6372974" "20060217174" "9037466" "20110029386" "8460109" "8769558" "20080281448" "20100325239" "20090182889" "20080317441" "20080120347" "8775314" "20040078357" "20080155129" "20100114846" "20130282800" "20070243925" "20040187027" "8549097" "20080235580" "20090271706" "20110320628" "20090007188" "20010016869" "20100281093" "7020704" "8789086" "20100325238" "20100011054" "20040244031" "9078049" "20110154173" "20070185972" "20100167823" "20090012935" "7956272" "8433812" "7536474" "7240093" "20070168463" "20050204126" "8083591" "7054888" "8611428" "20100100444" "20070297755" "6452609" "20110176786" "8627205" "7278920" "20070099703" "20060242259" "20130163953" "20080103974" "7386798" "8185579" "20090304359" "20060025220" "8239504" "7509178" "20070204115" "7506019" "20100185775" "20050080743" "8779266" "20080208378" "7089425" "20080004978" "20080159724" "20090177303" "20080147873" "20050181878" "8358273" "8644503" "8348759" "7735012" "7779357" "20100315549" "7519667" "20070213107" "8826445" "8812600" "20070066404" "8506402" "20060029093" "20090131141" "20070250849" "20090228578" "20090193474" "20110106962" "6330593" "7584353" "20090006963" "20060021057" "20070149281" "7803052" "20070011279" "20070192428" "8805830" "20050155068" "8218764" "6816909" "7107045" "7343347" "8565577" "8874436" "20020104096" "20080091529" "8752199" "7310729" "20100049741" "20100211968" "20090282093" "20070271366" "20090282077" "8019200").pn.				
L21	200	("7493289" "20050245317" "6679777" "7475155" "8818169" "8464163" "7941582"	US-PGPUB; USPAT	OR	OFF	2017/04/28 17:17

"8763058" "20090228544" "20080026732"
"20040068536" "20020069412" "7136874"
"20050013589" "6154773" "8156046"
"20070167216" "8464164" "20090254827"
"20090282050" "20060287054" RE41331
"8655953" "20090182445" "20090172542"
"8005419" "7985134" "8738615" "7338372"
"8019885" "20040248561" "20130212222"
"20060031257" "20100184517" "7647297"
"9003050" "20060288165" "20080234043"
"20080132311" "20080169930"
"20100088602" "20120071244" "7930369"
"8018455" "20070244880" "9003455"
"20070283449" "8970668" "7783703"
"20130163580" "8805939" "8589580"
"7979557" "8046790" "20110087600"
"20080109851" "8506404" "20060179048"
"20090157500" "20100075750" "7444388"
"8001471" "8943210" "20100042235"
"7503006" "8973153" "20100138581"
"20100071076" "20100100818"
"20110145428" "6944185" "20070191008"
"8799408" "20110135283" "8409010"
"20040033821" "20110067066"
"20110064378" "20120194734"
"20110067099" "20070180383" "7558870"
"8605097" "7938727" "20120203830"
"20090227375" "20090077469" "8402155"
"6199076" "20110064377" "20090005141"
"7796190" "20060168150" "20130024539"
"20110066489" "20100293598" "8090606"
"20090265750" "20110137976"
"20110066942" "8255331" "20050216417"
"20070050458" "20110066944"
"20110066663" "8239559" "8181115"
"20110150414" "20120246585"
"20040254960" "20070204057"
"20080103976" "20090204541" "8233366"
"20090290710" "20070248328"
"20080183840" "20060153040" "6801964"
"20050183017" "6856990" "20090307199"
"8631351" "20140032636" "8086651"
"20040098754" "8190680" "20110181781"
"7177950" "7809789" "20110064385"
"8122474" "8814692" "7806408" "7469346"
"20110063508" "20080027992" "7904964"
"7281214" "8078685" "20060188096"
"20110064386" "20110093891"
"20060002681" "20080184127"
"20070243934" "20090215531"
"20120042047" "20090041244" "8069262"
"20090305788" "7966374" "20070262952"
"8348762" "8025569" "20050096005"
"7877776" "20090319925" "20110063317"
"20080184359" "9021060" "20080212944"
"20110246657" "7753797" "20040128364"
"20100262833" "8639086" "7734688"
"20080086423" "20080288097"
"20080222243" "7197049" "20120207441"
"8645599" "20090193032" "20090069915"
"8316300" "20080182510" "8180645"
"8429696" "9003539" "20080160909"
"20080189295" "20090205003" "8161562"
"20070276866" "20070191101"

		"20110176790" "20120323349" "8683337" "20080184317" "20080160908" "8482673" "7702805" "20130097302" "20080175566" "20070006079" "8094168" "20070094276" "8777737").pn.				
L22	200	("20090210415" "20110099286" "20100104255" "20080180401" "20080163302" "20100169455" "20040013416" "8088001" "20050278257" "6876901" "8244898" "20080182509" "20080182508" "20060217173" "20050172309" "20130022335" "20080187115" "20080162655" "20130022185" "20080168133" "20040022391" "8739234" "20080010372" "20070191102" "20100325544" "20070214182" "9049472" "20120047222" "20050066339" "20090158326" "20060259355" "8170468" "8485881" "20100087251" "20090275285" "20060095401" "20100023885" "7562394" "20100218208" "7941500" "20110125878" "20030188183" "20090181769" "20110004669" "20070245376" "20090300145" "20080178238" "8430745" "20090106442" "8303413" "20040168052" "20120042309" "20090150557" "20090025085" "20040240861" "7806761" "9081976" "20030216958" "20050188310" "20110035258" "20040267715" "7797442" "8117651" "20080062894" "7984377" "20060095471" "20100198732" "8020762" "20110099225" "7206766" "8202161" "20090088235" "20050135792" "20110105226" "20080276158" "20060015560" "20120251077" "8782269" "8282459" "7502471" "20030076345" "20090157553" "8038523" "20090300202" "7717783" "7617272" "8038520" "8775665" "20070006061" "20110289178" "8668590" "20050165849" "20020171760" "8615160" "7593744" "20070192445" "20090062015" "7462104" "8840475" "8621533" "20080081700" "20110207525" "20110055016" "8914603" "20040254956" "8197324" "20040078382" "8392600" "20040133467" "20040181490" "20070006078" "7877687" "20090225093" "20060164932" "20070248326" "20080305738" "6993509" "7837557" "8606942" "20110169913" "8032004" "20110197237" "7917643" "8602866" "8028038" "8078748" "20070033419" "20070198744" "20100169461" "20110296057" "20080130886" "20110035467" "8234385" "20110035668" "20090150918" "8086575" "20110302317" "8253649" "20090204481" "20080195692" "20080086494" "7699703" "20090327449" "20080288099" "9060187" "7343419" "20110112914" "20080137848" "20080049935" "8181110" "20100195977" "8230099" "20060111172" "20110090645" "20110231660" "20110213837" "8548946"	US-PGPUB; USPAT	OR	OFF	2017/04/28 17:17

		"7228341" "7929551" "20020141582" "20070214234" "20080005171" "20080037781" "6463078" "20030078102" "7533061" "7797374" "20060155914" "20050252958" "20080109841" "20120014558" "20050164793" "20050108320" "8370732" "8556724" "20080005179" "8775321" "6538665" "20110009051" "8051454" "8239359" "7300352" "8285809" "8287341" "20070174866" "20060280437" "8028073" "7010213" "20100125741" "7840984" "20060227673" "20060123058" "7878808" "20050071375" "8892761" "20040172481" "20060288111" "8066568" "20100185729" "8095566").pn.				
L23	200	("20060020879" "20060068907" "20080008439" "20030208300" "20030172033" "20050240588" "20110150430" "20110145726" "7241219" "20100083307" "20080274796" "8825468" "7881656" "20100110200" "20060008256" "20080117926" "20020169970" "8909023" "8468130" "7617278" "8893195" "20060239657" "20120030436" "20120030706" "7913157" "8150918" "7428572" "7611409" "20030237043" "6262724" "20080222520" "20080124054" "9021522" "8682145" "20090254607" "20110255842" "20090147952" "20060059526" "7686215" "7412459" "7702592" "20100223337" "8246468" "7871327" "7792925" "8485878" "20080155470" "7318196" "8167723" "8856641" "8543785" "20090118017" "8282484" "7946918" "20080178242" "20060128469" "20100094900" "8170123" "20060146772" "20120184362" "20050059378" "20110202842" "9009337" "8631334" "20100042920" "7753790" "20100191860" "7783773" "6192340" "20090117994" "20090234472" "7536355" "7966414" "8543095" "7925897" "20090182817" "20100082585" "20090193138" "8721448" "8090779" "20090300139" "20050017988" "7165219" "8175097" "20060211470" "20100077290" "20090163273" "7580526" "20090118001" "7841946" "20090118005" "20090115133" "20080127278" "8700739" "20070083467" "8688841" "8484563" "20020088011" "20040152054" "20080013274" "20040024580" "7113918" "20120124123" "6850256" "7559089" "20120233036" "7315984" "20080028170" "20060072046" "20080055314" "8516035" "20100121911" "8346762" "7706637" "8245142" "20120066768" RE45531 "20030115351" "20100056280" "8707181" "8874725" "20080155297" "20040078832" "20080214103" "20100023144" "8086902" "8522142" "20090093306" "8074083" "7491123" "20090325709" "9054891" "8301715" "7523507" "20060178187"	US-PGPUB; USPAT	OR	OFF	2017/04/28 17:17

		"20100027966" "20090118006" "8056139" "8266637" "20100064332" "20080209487" "20100011392" "20070265091" "6908389" "20080094400" "20090222862" "20070100787" "8296675" "20100274664" "8441338" "20100023893" "20060004778" "7797471" "20080090659" "7962640" "20070247551" "7690992" "20090132453" "8262466" "20080201375" "8438602" "20090025024" "8068716" "20070191104" "7069590" "20030083940" "7529870" "7814220" "7949810" "20110195790" "8317618" "8151199" "20090216683" "7623502" "20090253476" "20110081127" "20100010648" "20120054616" "20080133611" "7401150" "20080219638" "20060072596" "8397305" "20080028037" "20100268680" "8352544" "20040148424" "20110138429" "8438297" "7529871" "20080288096" "7991268" "8069255" "8661464" "20090248672" "20090193338" "20090183207" "6996236" "8016677" "20030211889").pn.				
L24	200	("20070022464" "8926395" "20080082576" "7877532" "8631451" "8131865" "20030126211" "7526588" "7951000" "20080065992" "20060084488" "7786367" "8135891" "7458025" "8539525" "20070281768" "20090132712" "8292626" "8655146" "8407809" "20100247061" "20130254340" "8447421" "20110111859" "20050246654" "8224752" "20120066289" "20060159068" "20110067115" "8484721" "20070248311" "20090265549" "8082376" "20070162611" "20090296552" "7647277" "8387083" "8444485" "20070006064" "7725557" "20080033990" "20030093548" "8214545" "8687042" "20080287190" "7844661" "7976372" "6113495" "20090060182" "20070282969" "7779185" "20050273491" "9055194" "20090265557" "20090265793" "20090265789" "20120028714" "8122475" "20090265746" "8428421" "20060246984" "20080189354" "20090112839" "20090164034" "20110229107" "20100158101" "7778971" "20090287567" "8918195" "7340526" "20080177860" "20110072366" "8171194" "7941761" "20100146544" "20090275412" "20080115045" "20060177198" "20090070184" "20050026693" "20110087971" "7548948" "20070250870" "8381310" "20050075166" "7805051" "8135769" "8206224" "20070250781" "8838693" "20120041954" "20030009343" "20060029013" "20080270881" "20060293969" "7896743" "20050273553" "8171195" "20070011225" "7882356" "20060258446" "9071796" "7945636" "20100049719" "20100306428" "20120210216" "20090049385" "20120059884" "8571991" "8357046" "8271115" "7925300" "20120197419" "8131898" "20090325706" "20090132072"	US-PGPUB; USPAT	OR	OFF	2017/04/28 17:17

		"20070245378" "20050060542" "7492769" "20100046917" "20090248802" "20100250761" "20080120389" "20110167170" "8196043" "7609835" "7110982" "8968077" "20080114645" "8359657" "20110022519" "20100161091" "20100076958" "8458147" "20070021972" "8585501" "20030115146" "20080244644" "8060909" "20110238520" "20090210079" "8121952" "20060287099" "20070061497" "20120284421" "20060293991" "8112361" "8713443" "6241612" "20010042107" "7702723" "20080212945" "8099536" "7535465" "20080235286" "8555395" "20060287097" "20090158443" "8366531" "20070077784" "20100037320" "8307392" "7245817" "20080155057" "8544033" "20100287472" "20110041063" "20100154035" "7690043" "20080089548" "6846238" "20030231861" "8612643" "20090204738" "20110211114" "20090063277" "7581182" "20070006080" "6582310" "20090046838" "8275360" "20070011237" "8352996" "7536565" "20100064000" "20060209174" "7987148" "20020162106" "20070245377" "20080229215" "20070213111" "20070129140" "20090164032" "20100064055" "20100304860" "20120252557" "20120050185" "20090089846" "8694665" "8738787").pn.				
L25	200	("20050010952" "8731381" "20080235588" "20080146338" "8775647" "7698467" "8888592" "20080250061" "20080063353" "20090124387" "20120079605" "7756792" "7111240" "8682750" "6256268" "20090204244" "7616097" "20100014833" "7904537" "7469410" "20080201376" "8996409" "20110201388" "20050246458" "20110093877" "7783070" "20060135230" "20090088240" "20070111776" "20070168540" "7917477" "8554616" "20070067301" "7529872" "20080194175" "20110119586" "8155336" "20110126255" "20070004519" "7966362" "8233916" "6641481" "8341037" "8180895" "20020107802" "20110122063" "20090088257" "20120185530" "5911582" "20080147214" "20080307454" "7085845" "20090093311" "20090088258" "7441020" "7722467" "7991738" "8046428" "20080172413" "20130038702" "20060206581" "20070247794" "20090013347" "20030009770" "8086226" "8341282" "20070220111" "20100333129" "20110172013" "20060095848" "20030115147" "20070213857" "7707246" "7681238" "20060190410" "7730165" "20070006063" "8244896" "20100285858" "20050283791" "20120198088" "20090276068" "20080270532" "20090132377" "7681200" "20120042134" "20080254897" "6884170" "9061207" "20070026944" "20100235743"	US-PGPUB; USPAT	OR	OFF	2017/04/28 17:17

		"20090282088" "20080254891" "7698301" "8321690" "20100010884" "20050076061" "8184943" "20020068525" "20110123175" "6990671" "20020194608" "20100088716" "8069232" "20080155634" "8376846" "6364765" "8255552" "7789757" "8533259" "20030149668" "20120052941" "20080281943" "20110125298" "20100192188" "20070259710" "8243924" "20040064504" "20060242275" "20080254878" "8171410" "20070056013" "20130024951" "8348716" "8771066" "20080254892" "20020165923" "20090082104" "5957695" "8403757" "20090018682" "20080098301" "7761339" "20080102947" "20060218618" "7115035" "6622171" "20110188199" "7996775" "7765280" "20120166668" "8812673" "20070265093" "8739294" "20050276572" "20050180567" "20110219460" "8429123" "8944917" "20150205628" "20040193900" "7685210" "7526778" "20100005183" "8755919" "6748537" "20070185892" "20090281888" "8750115" "7877798" "20090198361" "20040128198" "8959154" "7603113" "20070204349" "6715126" "20080033725" "20030135465" "6385596" "8291004" "20070240030" "20040025185" "8341752" "8523673" "20100250669" "20100332723" "7990809" "20070230904" "8784196" "20110098109" "20060179153" "20070038567" "20120117193" "7757241" "20030190950" "8271022" "20090191855" "20030190951" "20050025466" "8296763" "20070066392" "8468567" "8132263" "20070082720" "5679075" "8544046" "20080096668" "20060204211" "20090222117" "8172677").pn.				
L26	200	("7729946" "20020069418" "8473739" "20050193209" "20030134678" "8065394" "7376414" "20060121965" "20110126113" "20100195975" "20120218381" "20100131977" "7085842" "7930367" "8412840" "20030103079" "7303473" "8285901" "7149772" "8560950" "20100251121" "8909729" "20120254364" "8271038" "20030185395" "8577420" "20060218294" "8930405" "20090082105" "20060085862" "20100253764" "20030112262" "8585502" "8628414" "20090113315" "4785472" "20090187825" "20080107405" "7881476" "20070067243" "8403748" "6903779" "20080155062" "20070250512" "20050015464" "7258614" "20100008650" "8855275" "8684748" "6868403" "20120021825" "20050039128" "7606118" "8234572" "20100113140" "20090085724" "7353270" "20060265503" "20120157199" "20130340012" "20030115598" "8379540" "20100312931" "6990497" "20100169464" "20070076547" "20090172820" "7707224" "20100036759" "6843724" "8843589" "20090222739" "20100325022" "7611408" "20100124404"	US-PGPUB; USPAT	OR	OFF	2017/04/28 17:17

		"20060025216" "8152634" "8727882" "7997494" "20090094160" "8160495" "20050251807" "9043467" "6170060" "8706867" "8751343" "20080307463" "20080307462" "20080103977" "20080205205" "20040209692" "20040140998" "7558463" "20080307456" "7454019" "7164075" "5788507" "20050212214" "7865745" "20080097915" "7165725" "20060265409" "8793256" "20080224988" "8959660" "8491391" "9043276" "7356575" "20100057470" "8131646" "20100312932" "20090136218" "20070232098" "8230004" "20070055728" "20050272504" "20080152316" "20080208379" "8291236" "7668438" "20100070385" "7299291" "20120197897" "7634605" "8768744" "8788078" "20100035692" "20140143687" "20070216600" "20110083074" "20070006062" "20110231658" "20060259930" "20090106847" "20090076898" "7734800" "20090062944" "7778980" "8756160" "20070093277" "20030043191" "20140259166" "20110231872" "20060190616" "7698178" "7086946" "20100049835" "7844498" "8468369" "8753199" "8731371" "20050262449" "20100125646" "8713026" "20110029873" "8622552" "20070067241" "8401187" "20040267899" "8230044" "20020112004" "20070087838" "20020138593" "8359591" "20020055386" "20120033140" "8393948" "20110181518" "20060230038" "20110028221" "7596582" "20120226780" "8353757" "20070299874" "7539307" "20060036488" "20070101361" "20020098885" "20100161825" "20080113614" "20040032348" "20100042654" "20090259926" "6888477" "20120210373" "20080288098" "20070055997" "20030084126" "8725063" "20060080741" "20070236482" "20140033025" "8996145" "20090117846" "20080176540" "7984511" "7636754" "20090100092" "20060041640" "7644173").pn.				
L27	100	("8429365" "20040259621" "8239595" "20110149158" "20020190876" "8608536" "7761414" "20100036748" "20090136029" "7113999" "8282479" "8930561" "7802004" "8225359" "7844722" "20080107170" "20060044951" "7796941" "7566274" "20090119169" "20050157600" "20110066776" "20110208336" "8469813" "8608537" "20040064835" "7613691" "20070291709" "8682722" "20060090122" "5839905" "8893022" "20090315670" "20070266123" "8774602" "20110317831" "20030217170" "20070237494" "20090061927" "20060059223" "9063755" "6692353" "8973083" "20060265667" "7160191" "20040117442" "6507727" "8055688" "20060232449" "20110295393"	US-PGPUB; USPAT	OR	OFF	2017/04/28 17:17

		"7627343" "20110066775" "20020046095" "20040205811" "20050114205" "8413038" "8251811" "20130298154" "20090006695" "8595854" "7920901" "20090215540" "8120707" "20070132660" "8473976" "20120062471" "20090093312" "20100287480" "20060117344" "7610310" "8364024" "9055315" "20080268959" "20080086689" "20070233295" "20060206561" "8458053" "20070006065" "20060123185" "20110066673" "20090319901" "20100269030" "7920856" "8419548" "7997582" "8386414" "20100169463" "20070260742" "20030061280" "20120192229" "8174827" "20060046851" "20080281685" "6253237" "8230097" "8632400" "7303470" "20080201751" "20080256563" "20080076495").pn.				
L28	2500	L15 L16 L17 L18 L19 L20 L21 L22 L23 L24 L25 L26 L27	US-PGPUB; USPAT	OR	OFF	2017/04/28 17:17
L29	9	L28 and "QR code"	US-PGPUB; USPAT	OR	OFF	2017/04/28 17:17
L30	265	(((display or gaming or tablet or personal or laptop)near2 (device or apparatus or terminal or console or computer)) or television) same (send$3 or transmi$9) same "unique identifier" same (host or stb or PC)	US-PGPUB; USPAT	OR	OFF	2017/04/28 17:18
L34	4990	(715/716).ccls.	US-PGPUB; USPAT; USOCR; FPRS; EPO; JPO; DERWENT; IBM_TDB	OR	OFF	2017/04/28 17:21
L35	4	L30 and L34	US-PGPUB; USPAT; USOCR; FPRS; EPO; JPO; DERWENT; IBM_TDB	OR	OFF	2017/04/28 17:21
L36	34	google with cast	US-PGPUB; USPAT; USOCR; FPRS; EPO; JPO; DERWENT; IBM_TDB	OR	OFF	2017/04/28 17:22
L37	4220	apple with tv	US-PGPUB; USPAT; USOCR; FPRS; EPO; JPO; DERWENT; IBM_TDB	OR	OFF	2017/04/28 17:22

EAST Search History (Interference)

Ref	Hits	Search Query	DBs	Default	Plurals	Time

#				Operator		Stamp
L31	265	(((display or gaming or tablet or personal or laptop)near2 (device or apparatus or terminal or console or computer)) or television) same (send$3 or transmi$9) same "unique identifier" same (host or stb or PC)	US-PGPUB; USPAT	OR	OFF	2017/04/28 17:18
L32	3375	(715/716).ccls.	US-PGPUB; USPAT	OR	OFF	2017/04/28 17:19
L33	4	L31 and L32	US-PGPUB; USPAT	OR	OFF	2017/04/28 17:19

4/28/2017 5:23:51 PM
C:\Users\dhope\Documents\EAST\Workspaces\13532546amd.wsp

IN THE UNITED STATES PATENT AND TRADEMARK OFFICE

First Named Inventor	:	David Strober	Art Unit	:	2173
Serial No.	:	13/532,546	Examiner	:	Darrin Hope
Filed	:	June 25, 2012	Conf. No.	:	9012
Title	:	VIRTUALIZED HOSTING AND DISPLAYING OF CONTENT USING A SWAPPABLE MEDIA PLAYER			

MAIL STOP AMENDMENT
Commissioner for Patents
P.O. Box 1450
Alexandria, VA 22313-1450

INFORMATION DISCLOSURE STATEMENT

Please consider the references listed on the enclosed PTO 1449 Disclosure Form. Copies of the listed foreign patent documents are enclosed.

A copy of a communication from a foreign patent office in a related foreign application is also enclosed (listed as item 4) and indicates the relevance of the other listed foreign-language references.

This statement is being filed after a first action on the merits, but before receipt of a final action or a notice of allowance. A late submission fee in the amount of $90, specified by 37 CFR §1.17(p), is being paid with this statement. Apply any necessary charges or credits to deposit account 06-1050, referencing the above attorney docket number.

Please contact the undersigned if there are any questions regarding this Statement.

Respectfully submitted,

Date: July 28, 2016

/Samuel Borodach/
Samuel Borodach
Reg. No. 38,388

Customer Number 26211
Fish & Richardson P.C.
Telephone: (212) 765-5070
Facsimile: (877) 769-7945

30956246.doc

ALL REFERENCES CONSIDERED EXCEPT WHERE LINED THROUGH. /D.H/

Substitute Disclosure Form U.S. Department of Commerce Patent and Trademark Office	Attorney Docket No. 30160-0005001	Application No. 13/532,546
Information Disclosure Statement by Applicant (Use several sheets if necessary)	Applicant David Strober	
(37 CFR §1.98(b))	Filing Date June 25, 2012	Group Art Unit 2173

U.S. Patent Documents

Examiner Initial	Desig. ID	Document Number	Publication Date	Patentee	Class	Subclass	Filing Date If Appropriate

Foreign Patent Documents or Published Foreign Patent Applications

Examiner Initial	Desig. ID	Document Number	Publication Date	Country or Patent Office	Class	Subclass	Translation Yes	Translation No
	1.	2006-525771 A		JP			See English counterpart in Desig. ID No. 2	
	2.	2004100500A2		WO				
	3.	2004-356695 A		JP			English Abstract	

Other Documents (include Author, Title, Date, and Place of Publication)

Examiner Initial	Desig. ID	Document
	4.	Japanese Patent Office, Examination Report for JP Patent App. No. 2014-506460, dated June 28, 2016 (6 pages) (and English Translation)

Examiner Signature /DARRIN HOPE/	Date Considered /D.H/ (04/28/2017)
EXAMINER: Initials citation considered. Draw line through citation if not in conformance and not considered. Include copy of this form with next communication to applicant.	

Substitute Disclosure Form

ALL REFERENCES CONSIDERED EXCEPT WHERE LINED THROUGH. /D.H/

UNITED STATES PATENT AND TRADEMARK OFFICE

UNITED STATES DEPARTMENT OF COMMERCE
United States Patent and Trademark Office
Address: COMMISSIONER FOR PATENTS
P.O. Box 1450
Alexandria, Virginia 22313-1450
www.uspto.gov

BIB DATA SHEET

CONFIRMATION NO. 9012

SERIAL NUMBER	FILING or 371(c) DATE	CLASS	GROUP ART UNIT	ATTORNEY DOCKET NO.
13/532,546	06/25/2012 RULE	715	2173	30160-0005001

APPLICANTS

INVENTORS

David Strober, Rye, NY;

**** CONTINUING DATA ****************************

This application is a CIP of 13/157,821 06/10/2011 PAT 8904289
which claims benefit of 61/477,998 04/21/2011

**** FOREIGN APPLICATIONS ****************************

**** IF REQUIRED, FOREIGN FILING LICENSE GRANTED **** ** SMALL ENTITY **
07/06/2012

		STATE OR COUNTRY	SHEETS DRAWINGS	TOTAL CLAIMS	INDEPENDENT CLAIMS
Foreign Priority claimed ☐ Yes ☑ No 35 USC 119(a-d) conditions met ☐ Yes ☑ No Verified and Acknowledged /DARRIN HOPE/ Examiner's Signature	☐ Met after Allowance Initials	NY	4	20	3

ADDRESS

FISH & RICHARDSON P.C. (NY)
P.O. BOX 1022
MINNEAPOLIS, MN 55440-1022
UNITED STATES

TITLE

VIRTUALIZED HOSTING AND DISPLAYING OF CONTENT USING A SWAPPABLE MEDIA PLAYER

FILING FEE RECEIVED 870	FEES: Authority has been given in Paper No._____ to charge/credit DEPOSIT ACCOUNT No._____ for following:	☐ All Fees ☐ 1.16 Fees (Filing) ☐ 1.17 Fees (Processing Ext. of time) ☐ 1.18 Fees (Issue) ☐ Other _____ ☐ Credit

BIB (Rev. 05/07).

Issue Classification	Application/Control No.	Applicant(s)/Patent Under Reexamination
	13532546	STROBER, DAVID
	Examiner	**Art Unit**
	DARRIN HOPE	2173

CPC						
Symbol					**Type**	**Version**
G06F		17	/	30846	F	2013-01-01
G06F		9	/	4445	I	2013-01-01
G06F		17	/	30864	I	2013-01-01
			/			
			/			
			/			
			/			
			/			
			/			
			/			
			/			
			/			
			/			
			/			
			/			

CPC Combination Sets								
Symbol					**Type**	**Set**	**Ranking**	**Version**
			/					
			/					

/DARRIN HOPE/ Examiner.Art Unit 2173 (Assistant Examiner)	04/28/2017 (Date)	**Total Claims Allowed:** 20	
/TADEESE HAILU/ Primary Examiner.Art Unit 2173 (Primary Examiner)	05/01/2017 (Date)	O.G. Print Claim(s) 1	O.G. Print Figure 1

Issue Classification	Application/Control No.	Applicant(s)/Patent Under Reexamination
	13532546	STROBER, DAVID
	Examiner	**Art Unit**
	DARRIN HOPE	2173

US ORIGINAL CLASSIFICATION		INTERNATIONAL CLASSIFICATION	
CLASS	SUBCLASS	CLAIMED	NON-CLAIMED
715	716	G 0 6 F 3 / 01 (2006.01.01)	

CROSS REFERENCE(S)					
CLASS	SUBCLASS (ONE SUBCLASS PER BLOCK)				

/DARRIN HOPE/ Examiner.Art Unit 2173 (Assistant Examiner)	04/28/2017 (Date)	**Total Claims Allowed:** 20	
/TADEESE HAILU/ Primary Examiner.Art Unit 2173 (Primary Examiner)	05/01/2017 (Date)	O.G. Print Claim(s) 1	O.G. Print Figure 1

U.S. Patent and Trademark Office

Part of Paper No. 20170428

Issue Classification	Application/Control No.	Applicant(s)/Patent Under Reexamination
	13532546	STROBER, DAVID
	Examiner	**Art Unit**
	DARRIN HOPE	2173

☐ Claims renumbered in the same order as presented by applicant ☐ CPA ☐ T.D. ☐ R.1.47

Final	Original	Final	Original	Final	Original	Final	Original	Final	Original	Final	Original	Final	Original	Final	Original
	1		17	20	33										
5	2		18												
	3		19												
6	4		20												
9	5		21												
10	6		22												
11	7		23												
12	8		24												
	9		25												
7	10	14	26												
8	11	15	27												
13	12	4	28												
1	13	16	29												
	14	17	30												
2	15	18	31												
3	16	19	32												

/DARRIN HOPE/ Examiner.Art Unit 2173 (Assistant Examiner)	04/28/2017 (Date)	**Total Claims Allowed:** 20	
/TADEESE HAILU/ Primary Examiner.Art Unit 2173 (Primary Examiner)	05/01/2017 (Date)	O.G. Print Claim(s) 1	O.G. Print Figure 1

U.S. Patent and Trademark Office

Part of Paper No. 20170428

Search Notes	Application/Control No.	Applicant(s)/Patent Under Reexamination
	13532546	STROBER, DAVID
	Examiner	**Art Unit**
	DARRIN HOPE	2173

CPC- SEARCHED

Symbol	Date	Examiner
G06F3/01	11/3/2014	DH

CPC COMBINATION SETS - SEARCHED

Symbol	Date	Examiner

US CLASSIFICATION SEARCHED

Class	Subclass	Date	Examiner
715/716		11/3/2014	DH

SEARCH NOTES

Search Notes	Date	Examiner
EAST	7/25/2015	DH
EAST	7/8/2016	DH
EAST	4/28/2017	DH

INTERFERENCE SEARCH

US Class/ CPC Symbol	US Subclass / CPC Group	Date	Examiner
715	716	4/28/2017	DH

To: PATDOCTC@fr.com,,
From: PAIR_eOfficeAction@uspto.gov
Cc: PAIR_eOfficeAction@uspto.gov
Subject: Private PAIR Correspondence Notification for Customer Number 26211

May 08, 2017 03:42:07 AM

Dear PAIR Customer:

FISH & RICHARDSON P.C. (NY)
P.O. BOX 1022
MINNEAPOLIS, MN 55440-1022
UNITED STATES

The following USPTO patent application(s) associated with your Customer Number, 26211 , have new outgoing correspondence. This correspondence is now available for viewing in Private PAIR.

The official date of notification of the outgoing correspondence will be indicated on the form PTOL-90 accompanying the correspondence.

Disclaimer:
The list of documents shown below is provided as a courtesy and is not part of the official file wrapper. The content of the images shown in PAIR is the official record.

Application	Document	Mailroom Date	Attorney Docket No.
13532546	NOA	05/08/2017	30160-0005001
	892	05/08/2017	30160-0005001
	1449	05/08/2017	30160-0005001

To view your correspondence online or update your email addresses, please visit us anytime at https://sportal.uspto.gov/secure/myportal/privatepair.

If you have any questions, please email the Electronic Business Center (EBC) at EBC@uspto.gov with 'e-Office Action' on the subject line or call 1-866-217-9197 during the following hours:

Monday - Friday 6:00 a.m. to 12:00 a.m.

Thank you for prompt attention to this notice,

UNITED STATES PATENT AND TRADEMARK OFFICE

PATENT APPLICATION INFORMATION RETRIEVAL SYSTEM

PTO/SB/80 (11-08)
Approved for use through 11/30/2011. OMB 0651-0035
U.S. Patent and Trademark Office; U.S. DEPARTMENT OF COMMERCE
Under the Paperwork Reduction Act of 1995, no persons are required to respond to a collection of information unless it displays a valid OMB control number.

POWER OF ATTORNEY TO PROSECUTE APPLICATIONS BEFORE THE USPTO

I hereby revoke all previous powers of attorney given in the application identified in the attached statement under 37 CFR 3.73(b).

I hereby appoint:

☑ Practitioners associated with the Customer Number: 149550

OR

☐ Practitioner(s) named below (if more than ten patent practitioners are to be named, then a customer number must be used):

Name	Registration Number	Name	Registration Number

as attorney(s) or agent(s) to represent the undersigned before the United States Patent and Trademark Office (USPTO) in connection with any and all patent applications assigned only to the undersigned according to the USPTO assignment records or assignment documents attached to this form in accordance with 37 CFR 3.73(b).

Please change the correspondence address for the application identified in the attached statement under 37 CFR 3.73(b) to:

☑ The address associated with Customer Number: 149550

OR

☐ Firm or Individual Name			
Address			
City		State	Zip
Country			
Telephone		Email	

Assignee Name and Address:

Touchstream Technologies, Inc.
79 Madison Avenue
New York, NY 10016

A copy of this form, together with a statement under 37 CFR 3.73(b) (Form PTO/SB/96 or equivalent) is required to be filed in each application in which this form is used. The statement under 37 CFR 3.73(b) may be completed by one of the practitioners appointed in this form if the appointed practitioner is authorized to act on behalf of the assignee, and must identify the application in which this Power of Attorney is to be filed.

SIGNATURE of Assignee of Record

The individual whose signature and title is supplied below is authorized to act on behalf of the assignee

Signature		Date	7-7-2017
Name	Herb Mitschele	Telephone	310-383-3383
Title	CEO, Touchstream Technologies, Inc.		

This collection of information is required by 37 CFR 1.31, 1.32 and 1.33. The information is required to obtain or retain a benefit by the public which is to file (and by the USPTO to process) an application. Confidentiality is governed by 35 U.S.C. 122 and 37 CFR 1.11 and 1.14. This collection is estimated to take 3 minutes to complete, including gathering, preparing, and submitting the completed application form to the USPTO. Time will vary depending upon the individual case. Any comments on the amount of time you require to complete this form and/or suggestions for reducing this burden, should be sent to the Chief Information Officer, U.S. Patent and Trademark Office, U.S. Department of Commerce, P.O. Box 1450, Alexandria, VA 22313-1450. DO NOT SEND FEES OR COMPLETED FORMS TO THIS ADDRESS. **SEND TO: Commissioner for Patents, P.O. Box 1450, Alexandria, VA 22313-1450.**

If you need assistance in completing the form, call 1-800-PTO-9199 and select option 2.

PTO/SB/96 (07-09)
Approved for use through 07/31/2012. OMB 0651-0031
U.S. Patent and Trademark Office; U.S. DEPARTMENT OF COMMERCE
Under the Paperwork Reduction Act of 1995, no persons are required to respond to a collection of information unless it displays a valid OMB control number.

STATEMENT UNDER 37 CFR 3.73(b)

Applicant/Patent Owner: TOUCHSTREAM TECHNOLOGIES, INC.

Application No./Patent No.: 13/532,546 Filed/Issue Date: 06/25/2012

Titled:
VIRTUALIZED HOSTING AND DISPLAYING OF CONTENT USING A SWAPPABLE MEDIA PLAYER

TOUCHSTREAM TECHNOLOGIES, INC. , a CORPORATION
(Name of Assignee) (Type of Assignee, e.g., corporation, partnership, university, government agency, etc.

states that it is:

1. [X] the assignee of the entire right, title, and interest in;

2. [ ] an assignee of less than the entire right, title, and interest in
(The extent (by percentage) of its ownership interest is _____ %); or

3. [ ] the assignee of an undivided interest in the entirety of (a complete assignment from one of the joint inventors was made)

the patent application/patent identified above, by virtue of either:

A. [X] An assignment from the inventor(s) of the patent application/patent identified above. The assignment was recorded in the United States Patent and Trademark Office at Reel 029121, Frame 0324, or for which a copy therefore is attached.

OR

B. [ ] A chain of title from the inventor(s), of the patent application/patent identified above, to the current assignee as follows:

1. From: _____ To: _____
The document was recorded in the United States Patent and Trademark Office at
Reel _____, Frame _____, or for which a copy thereof is attached.

2. From: _____ To: _____
The document was recorded in the United States Patent and Trademark Office at
Reel _____, Frame _____, or for which a copy thereof is attached.

3. From: _____ To: _____
The document was recorded in the United States Patent and Trademark Office at
Reel _____, Frame _____, or for which a copy thereof is attached.

[ ] Additional documents in the chain of title are listed on a supplemental sheet(s).

[X] As required by 37 CFR 3.73(b)(1)(i), the documentary evidence of the chain of title from the original owner to the assignee was, or concurrently is being, submitted for recordation pursuant to 37 CFR 3.11.

[NOTE: A separate copy (*i.e.*, a true copy of the original assignment document(s)) must be submitted to Assignment Division in accordance with 37 CFR Part 3, to record the assignment in the records of the USPTO. See MPEP 302.08]

The undersigned (whose title is supplied below) is authorized to act on behalf of the assignee.

Signature	7/17/17 Date
Herb Mitschele Printed or Typed Name	CEO Title

This collection of information is required by 37 CFR 3.73(b). The information is required to obtain or retain a benefit by the public which is to file (and by the USPTO to process) an application. Confidentiality is governed by 35 U.S.C. 122 and 37 CFR 1.11 and 1.14. This collection is estimated to take 12 minutes to complete, including gathering, preparing, and submitting the completed application form to the USPTO. Time will vary depending upon the individual case. Any comments on the amount of time you require to complete this form and/or suggestions for reducing this burden, should be sent to the Chief Information Officer, U.S. Patent and Trademark Office, U.S. Department of Commerce, P.O. Box 1450, Alexandria, VA 22313-1450. DO NOT SEND FEES OR COMPLETED FORMS TO THIS ADDRESS. **SEND TO: Commissioner for Patents, P.O. Box 1450, Alexandria, VA 22313-1450.**

If you need assistance in completing the form, call 1-800-PTO-9199 and select option 2.

Electronic Acknowledgement Receipt

EFS ID:	29817068
Application Number:	13532546
International Application Number:	
Confirmation Number:	9012
Title of Invention:	VIRTUALIZED HOSTING AND DISPLAYING OF CONTENT USING A SWAPPABLE MEDIA PLAYER
First Named Inventor/Applicant Name:	David Strober
Customer Number:	26211
Filer:	Keith Joshua Bae/Traci Burke
Filer Authorized By:	Keith Joshua Bae
Attorney Docket Number:	30160-0005001
Receipt Date:	18-JUL-2017
Filing Date:	25-JUN-2012
Time Stamp:	15:49:51
Application Type:	Utility under 35 USC 111(a)

Payment information:

Submitted with Payment	no

File Listing:

Document Number	Document Description	File Name	File Size(Bytes)/ Message Digest	Multi Part /.zip	Pages (if appl.)
1	Power of Attorney	TSTH_277746_Executed_POA.pdf	122307 745b1febd5eee081afc0e368be981565588 88790	no	1

Warnings:

Information:					
2	Assignee showing of ownership per 37 CFR 3.73	TSTH_277746_Executed_Statement_373b.pdf	100580 3ad40214a3a3a3b3c79b545f37e2750b0a829f3e	no	1
Warnings:					
Information:					
			Total Files Size (in bytes):	222887	

This Acknowledgement Receipt evidences receipt on the noted date by the USPTO of the indicated documents, characterized by the applicant, and including page counts, where applicable. It serves as evidence of receipt similar to a Post Card, as described in MPEP 503.

<u>New Applications Under 35 U.S.C. 111</u>
If a new application is being filed and the application includes the necessary components for a filing date (see 37 CFR 1.53(b)-(d) and MPEP 506), a Filing Receipt (37 CFR 1.54) will be issued in due course and the date shown on this Acknowledgement Receipt will establish the filing date of the application.
<u>National Stage of an International Application under 35 U.S.C. 371</u>
If a timely submission to enter the national stage of an international application is compliant with the conditions of 35 U.S.C. 371 and other applicable requirements a Form PCT/DO/EO/903 indicating acceptance of the application as a national stage submission under 35 U.S.C. 371 will be issued in addition to the Filing Receipt, in due course.
<u>New International Application Filed with the USPTO as a Receiving Office</u>
If a new international application is being filed and the international application includes the necessary components for an international filing date (see PCT Article 11 and MPEP 1810), a Notification of the International Application Number and of the International Filing Date (Form PCT/RO/105) will be issued in due course, subject to prescriptions concerning national security, and the date shown on this Acknowledgement Receipt will establish the international filing date of the application.

UNITED STATES PATENT AND TRADEMARK OFFICE

UNITED STATES DEPARTMENT OF COMMERCE
United States Patent and Trademark Office
Address: COMMISSIONER FOR PATENTS
P.O. Box 1450
Alexandria, Virginia 22313-1450
www.uspto.gov

APPLICATION NUMBER	FILING OR 371(C) DATE	FIRST NAMED APPLICANT	ATTY. DOCKET NO./TITLE
13/532,546	06/25/2012	David Strober	30160-0005001

CONFIRMATION NO. 9012

POA ACCEPTANCE LETTER

149550
SHOOK, HARDY & BACON LLP
(Touchstream Technologies, Inc.)
2555 GRAND BLVD
KANSAS CITY, MO 64108-2613

OC000000092900959

Date Mailed: 07/20/2017

NOTICE OF ACCEPTANCE OF POWER OF ATTORNEY

This is in response to the Power of Attorney filed 07/18/2017.

The Power of Attorney in this application is accepted. Correspondence in this application will be mailed to the above address as provided by 37 CFR 1.33.

Questions about the contents of this notice and the requirements it sets forth should be directed to the Office of Data Management, Application Assistance Unit, at **(571) 272-4000** or **(571) 272-4200** or **1-888-786-0101**.

/hteffera/

UNITED STATES PATENT AND TRADEMARK OFFICE

UNITED STATES DEPARTMENT OF COMMERCE
United States Patent and Trademark Office
Address: COMMISSIONER FOR PATENTS
P.O. Box 1450
Alexandria, Virginia 22313-1450
www.uspto.gov

APPLICATION NUMBER	FILING OR 371(C) DATE	FIRST NAMED APPLICANT	ATTY. DOCKET NO./TITLE
13/532,546	06/25/2012	David Strober	30160-0005001

CONFIRMATION NO. 9012

POWER OF ATTORNEY NOTICE

26211
FISH & RICHARDSON P.C. (NY)
P.O. BOX 1022
MINNEAPOLIS, MN 55440-1022

OC000000092900907

Date Mailed: 07/20/2017

NOTICE REGARDING CHANGE OF POWER OF ATTORNEY

This is in response to the Power of Attorney filed 07/18/2017.

- The Power of Attorney to you in this application has been revoked by the assignee who has intervened as provided by 37 CFR 3.71. Future correspondence will be mailed to the new address of record(37 CFR 1.33).

Questions about the contents of this notice and the requirements it sets forth should be directed to the Office of Data Management, Application Assistance Unit, at **(571) 272-4000** or **(571) 272-4200** or **1-888-786-0101**.

/hteffera/

To: IPDOCKET@SHB.COM,IPRCDKT@SHB.COM,tquick@shb.com
From: PAIR_eOfficeAction@uspto.gov
Cc: PAIR_eOfficeAction@uspto.gov
Subject: Private PAIR Correspondence Notification for Customer Number 149550

Jul 20, 2017 04:17:52 AM

Dear PAIR Customer:

SHOOK, HARDY & BACON LLP
(Touchstream Technologies, Inc.)
2555 GRAND BLVD
KANSAS CITY, MO 64108-2613
UNITED STATES

The following USPTO patent application(s) associated with your Customer Number, 149550 , have new outgoing correspondence. This correspondence is now available for viewing in Private PAIR.

The official date of notification of the outgoing correspondence will be indicated on the form PTOL-90 accompanying the correspondence.

Disclaimer:
The list of documents shown below is provided as a courtesy and is not part of the official file wrapper. The content of the images shown in PAIR is the official record.

Application	Document	Mailroom Date	Attorney Docket No.
13532546	N570	07/20/2017	30160-0005001
	N570	07/20/2017	30160-0005001

To view your correspondence online or update your email addresses, please visit us anytime at https://sportal.uspto.gov/secure/myportal/privatepair.

If you have any questions, please email the Electronic Business Center (EBC) at EBC@uspto.gov with 'e-Office Action' on the subject line or call 1-866-217-9197 during the following hours:

Monday - Friday 6:00 a.m. to 12:00 a.m.

Thank you for prompt attention to this notice,

UNITED STATES PATENT AND TRADEMARK OFFICE

PATENT APPLICATION INFORMATION RETRIEVAL SYSTEM

Document Description: Issue Fee Payment (PTO-85B)

Issue Fee Transmittal Form

Application Number	Filing Date	First Named Inventor	Atty. Docket No.	Confirmation No.
13532546	25-Jun-2012	David Strober	TSTH.277746/30130-00050	9012

TITLE OF INVENTION :

VIRTUALIZED HOSTING AND DISPLAYING OF CONTENT USING A SWAPPABLE MEDIA PLAYER

Entity Status	Application Type	Art Unit	Class - Subclass	EXAMINER
Small	Utility under 35 USC 111(a)	2173	716000	DARRIN HOPE

Issue Fee Due	Publication Due	Total Fee(s) Due	Date Due	Prev. Paid Fee
$480	$0	$480	08-Aug-2017	$0

1.Change of Correspondence Address and/or Indication Of Fee Address (37 CFR 1.33 & 1.363)

Current Correspondence Address:	Current Indicated Fee Address :
149550 SHOOK, HARDY & BACON LLP (Touchstream Technologies, Inc.) 2555 GRAND BLVD KANSAS CITY MO 64108-2613 UNITED STATES 816-474-6550 IPDOCKET@SHB.COM	
☐ Change of correspondence address requested, system generated AIA/122-EFS form attached	☐ Fee Address indication requested, system generated SB/47-EFS form attached

2.Entity Status

Change in Entity Status

○ Applicant certifying micro entity status; system generated Micro Entity certification form attached. See 37 CFR 1.29.
Note: Absent a valid certification of micro entity status, issue fee payment in the micro entity amount will not be accepted at the risk of application abandonment. If this box is checked, you will be prompted to choose a micro entity status on the gross income basis (37 CFR 1.29(a)) or the institution of higher education basis (37 CFR 1.29(d)), and make the applicable certification online.

◉ Applicant asserting small entity status. See 37 CFR 1.27.
Note: If the application was previously under micro entity status, checking this box will be taken to be a notification of loss of entitlement to micro entity status.

○ Applicant changing to regular undiscounted fee status.
Note: Checking this box will be taken to be a notification of loss of entitlement to small or micro entity status, as applicable.

Document Description: Issue Fee Payment (PTO-85B)

3.The Following Fee(s) Are Submitted:

☒ Issue Fee	☐ I authorize USPTO to apply my previously paid issue fee to the current fees due
☐ Publication Fee	☐ The Director is hereby authorized to apply my previously paid issue fee to the current fee due and to charge deficient fees to Deposit Account Number _____
☐ Advance Order - # of copies _____	☒ If i**n addition to** the payment of the issue fee amount submitted with this form, there are any discrepancies in any amount(s) due, the Director is authorized to charge any deficiency, or credit any overpayment, to Deposit Account Number 192112 . The **issue fee must be submitted** with this form. **If payment of the issue fee does not accompany this form, checking this box and providing a deposit account number will NOT be effective to satisfy full payment of the fee(s) due.**

4.Firm and/or Attorney Names To Be Printed

NOTE: If no name is listed, no name will be printed
For printing on the patent front page, list to be displayed as entered

1. Shook, Hardy & Bacon L.L.P.
2.
3.

5.Assignee Name(s) and Residence Data To Be Printed

PLEASE NOTE: Unless an assignee is identified below, no assignee data will appear on the patent. If an assignee is identified below, the document has been filed for recordation as set forth in 37 CFR 3.11. Completion of this form is NOT a substitute for filing an assignment.

Name	City	State	Country	Category
TOUCHSTREAM TECHNOLOGIES, INC.	New York	NEW YORK	united states	corporation

6.Signature

I certify, in accordance with 37 CFR 1.4(d)(4) that I am an attorney or agent registered to practice before the Patent and Trademark Office who has filed and has been granted power of attorney in this application. I also certify that this Fee(s) Transmittal form is being transmitted to the USPTO via EFS-WEB on the date indicated below.

Signature	/KEITH J. BAE/	**Date**	08-08-2017
Name	Keith J. Bae	**Registration Number**	64633

Electronic Patent Application Fee Transmittal

Application Number:	13532546
Filing Date:	25-Jun-2012
Title of Invention:	VIRTUALIZED HOSTING AND DISPLAYING OF CONTENT USING A SWAPPABLE MEDIA PLAYER
First Named Inventor/Applicant Name:	David Strober
Filer:	Keith Joshua Bae/Traci Burke
Attorney Docket Number:	TSTH.277746/30130-0005001

Filed as Small Entity

Filing Fees for Utility under 35 USC 111(a)

Description	Fee Code	Quantity	Amount	Sub-Total in USD($)
Basic Filing:				
UTILITY APPL ISSUE FEE	2501	1	480	480
PUBL. FEE- EARLY, VOLUNTARY, OR NORMAL	1504	1	0	0
Pages:				
Claims:				
Miscellaneous-Filing:				
Petition:				
Patent-Appeals-and-Interference:				

Description	Fee Code	Quantity	Amount	Sub-Total in USD($)
Post-Allowance-and-Post-Issuance:				
Extension-of-Time:				
Miscellaneous:				
			Total in USD ($)	**480**

Electronic Acknowledgement Receipt

EFS ID:	30011928
Application Number:	13532546
International Application Number:	
Confirmation Number:	9012
Title of Invention:	VIRTUALIZED HOSTING AND DISPLAYING OF CONTENT USING A SWAPPABLE MEDIA PLAYER
First Named Inventor/Applicant Name:	David Strober
Customer Number:	149550
Filer:	Keith Joshua Bae/Traci Burke
Filer Authorized By:	Keith Joshua Bae
Attorney Docket Number:	TSTH.277746/30130-0005001
Receipt Date:	08-AUG-2017
Filing Date:	25-JUN-2012
Time Stamp:	15:31:26
Application Type:	Utility under 35 USC 111(a)

Payment information:

Submitted with Payment	yes
Payment Type	CARD
Payment was successfully received in RAM	$480
RAM confirmation Number	080917INTEFSW15312501
Deposit Account	
Authorized User	
The Director of the USPTO is hereby authorized to charge indicated fees and credit any overpayment as follows:	

File Listing:

Document Number	Document Description	File Name	File Size(Bytes)/ Message Digest	Multi Part /.zip	Pages (if appl.)
1	Issue Fee Payment (PTO-85B)	Web85b.pdf	46359 415d2ca22ea23fa0d1485a5318a4ce1b0556ca37	no	2
Warnings:					
Information:					
2	Fee Worksheet (SB06)	fee-info.pdf	32417 2133cf8ca5b77b2d3948f5c2563f81cad7125495	no	2
Warnings:					
Information:					
		Total Files Size (in bytes):	78776		

This Acknowledgement Receipt evidences receipt on the noted date by the USPTO of the indicated documents, characterized by the applicant, and including page counts, where applicable. It serves as evidence of receipt similar to a Post Card, as described in MPEP 503.

<u>New Applications Under 35 U.S.C. 111</u>
If a new application is being filed and the application includes the necessary components for a filing date (see 37 CFR 1.53(b)-(d) and MPEP 506), a Filing Receipt (37 CFR 1.54) will be issued in due course and the date shown on this Acknowledgement Receipt will establish the filing date of the application.
<u>National Stage of an International Application under 35 U.S.C. 371</u>
If a timely submission to enter the national stage of an international application is compliant with the conditions of 35 U.S.C. 371 and other applicable requirements a Form PCT/DO/EO/903 indicating acceptance of the application as a national stage submission under 35 U.S.C. 371 will be issued in addition to the Filing Receipt, in due course.
<u>New International Application Filed with the USPTO as a Receiving Office</u>
If a new international application is being filed and the international application includes the necessary components for an international filing date (see PCT Article 11 and MPEP 1810), a Notification of the International Application Number and of the International Filing Date (Form PCT/RO/105) will be issued in due course, subject to prescriptions concerning national security, and the date shown on this Acknowledgement Receipt will establish the international filing date of the application.

Substitute Disclosure Form U.S. Department of Commerce Patent and Trademark Office	Attorney Docket No. 30160-0005001	Application No. 13/532,546
Information Disclosure Statement by Applicant (Use several sheets if necessary)	Applicant David Strober	
(37 CFR §1.98(b))	Filing Date June 25, 2012	Group Art Unit 2173

U.S. Patent Documents

Examiner Initial	Desig. ID	Document Number	Publication Date	Patentee	Class	Subclass	Filing Date If Appropriate

Foreign Patent Documents or Published Foreign Patent Applications

Examiner Initial	Desig. ID	Document Number	Publication Date	Country or Patent Office	Class	Subclass	Translation Yes	Translation No
Change(s) applied to document, /S.J.W./ 5/11/2017	1.	2006-525771 A	11/2006	JP			See English counterpart in Desig. ID No. 2	
	2.	2004100500A2	11/2004	WO				
	3.	2004-356695 A	12/2004	JP			English Abstract	

Other Documents (include Author, Title, Date, and Place of Publication)

Examiner Initial	Desig. ID	Document
	4.	Japanese Patent Office, Examination Report for JP Patent App. No. 2014-506460, dated June 28, 2016 (6 pages) (and English Translation)

Examiner Signature /DARRIN HOPE/	Date Considered /D.H/ (04/28/2017)
EXAMINER: Initials citation considered. Draw line through citation if not in conformance and not considered. Include copy of this form with next communication to applicant.	

Substitute Disclosure Form

ALL REFERENCES CONSIDERED EXCEPT WHERE LINED THROUGH. /D.H/

UNITED STATES PATENT AND TRADEMARK OFFICE

UNITED STATES DEPARTMENT OF COMMERCE
United States Patent and Trademark Office
Address: COMMISSIONER FOR PATENTS
P.O. Box 1450
Alexandria, Virginia 22313-1450
www.uspto.gov

APPLICATION NO.	ISSUE DATE	PATENT NO.	ATTORNEY DOCKET NO.	CONFIRMATION NO.
13/532,546	09/19/2017	9767195	TSTH.277746/30130-0005001	9012

149550 7590 08/30/2017
SHOOK, HARDY & BACON LLP
(Touchstream Technologies, Inc.)
2555 GRAND BLVD
KANSAS CITY, MO 64108-2613

ISSUE NOTIFICATION

The projected patent number and issue date are specified above.

Determination of Patent Term Adjustment under 35 U.S.C. 154 (b)
(application filed on or after May 29, 2000)

The Patent Term Adjustment is 602 day(s). Any patent to issue from the above-identified application will include an indication of the adjustment on the front page.

If a Continued Prosecution Application (CPA) was filed in the above-identified application, the filing date that determines Patent Term Adjustment is the filing date of the most recent CPA.

Applicant will be able to obtain more detailed information by accessing the Patent Application Information Retrieval (PAIR) WEB site (http://pair.uspto.gov).

Any questions regarding the Patent Term Extension or Adjustment determination should be directed to the Office of Patent Legal Administration at (571)-272-7702. Questions relating to issue and publication fee payments should be directed to the Application Assistance Unit (AAU) of the Office of Data Management (ODM) at (571)-272-4200.

APPLICANT(s) (Please see PAIR WEB site http://pair.uspto.gov for additional applicants):

David Strober, Rye, NY;

The United States represents the largest, most dynamic marketplace in the world and is an unparalleled location for business investment, innovation, and commercialization of new technologies. The USA offers tremendous resources and advantages for those who invest and manufacture goods here. Through SelectUSA, our nation works to encourage and facilitate business investment. To learn more about why the USA is the best country in the world to develop technology, manufacture products, and grow your business, visit SelectUSA.gov.

IR103 (Rev. 10/09)

To: IPDOCKET@SHB.COM,IPRCDKT@SHB.COM,tquick@shb.com
From: PAIR_eOfficeAction@uspto.gov
Cc: PAIR_eOfficeAction@uspto.gov
Subject: Private PAIR Correspondence Notification for Customer Number 149550

Aug 31, 2017 04:08:36 AM

Dear PAIR Customer:

SHOOK, HARDY & BACON LLP
(Touchstream Technologies, Inc.)
2555 GRAND BLVD
KANSAS CITY, MO 64108-2613
UNITED STATES

The following USPTO patent application(s) associated with your Customer Number, 149550 , have new outgoing correspondence. This correspondence is now available for viewing in Private PAIR.

The official date of notification of the outgoing correspondence will be indicated on the form PTOL-90 accompanying the correspondence.

Disclaimer:
The list of documents shown below is provided as a courtesy and is not part of the official file wrapper. The content of the images shown in PAIR is the official record.

Application	Document	Mailroom Date	Attorney Docket No.
13532546	ISSUE.NTF	08/30/2017	TSTH.277746/30130-0005001

To view your correspondence online or update your email addresses, please visit us anytime at https://sportal.uspto.gov/secure/myportal/privatepair.

If you have any questions, please email the Electronic Business Center (EBC) at EBC@uspto.gov with 'e-Office Action' on the subject line or call 1-866-217-9197 during the following hours:

Monday - Friday 6:00 a.m. to 12:00 a.m.

Thank you for prompt attention to this notice,

UNITED STATES PATENT AND TRADEMARK OFFICE

PATENT APPLICATION INFORMATION RETRIEVAL SYSTEM