(12) UK Patent Application (19) GB (11) 2 399 780 (13) A

(43) Date of A Publication 29.09.2004

(21) Application No: 0307155.2

(22) Date of Filing: 28.03.2003

(71) Applicant(s):
Dyson Limited
(Incorporated in the United Kingdom)
Tetbury Hill, MALMESBURY, Wiltshire, SN16 0RP, United Kingdom

(72) Inventor(s):
Sarah Helen Liddell
Ricardo Gomiciaga-Pereda
Matthew James Burgess

(74) Agent and/or Address for Service:
Dyson Limited
Intellectual Property Dept, Tetbury Hill, MALMESBURY, Wiltshire, SN16 0RP, United Kingdom

(51) INT CL[7]:
A47L 9/16 , B04C 5/13 5/28

(52) UK CL (Edition W):
B2P P10B2A2 P10B2B P10B2C
A4F FFD

(56) Documents Cited:
GB 2374305 A **GB 2372435 A**
GB 2372434 A **GB 2372433 A**
GB 1533435 A

(58) Field of Search:
UK CL (Edition V) **A4F, B2P**
INT CL[7] **A47L, B04C**
Other: **ONLINE: WPI, JAPIO, EPODOC**

(54) Abstract Title: **Arrangement of cyclones for noise damping**

(57) Apparatus for separating particles from a fluid flow comprises a plurality of cyclones 104 arranged in parallel with one another, each cyclone having a fluid inlet and a fluid outlet. The plurality of cyclones 104 consists of a number of first cyclones 104a and a number of second cyclones 104b. The first cyclones 104a each have a fluid outlet 156 in which a centrebody 158 is provided and the second cyclones 104b each have a fluid outlet 156 in which no centrebody is provided. In a preferred embodiment, the plurality of cyclones is positioned downstream of a preliminary cyclone.

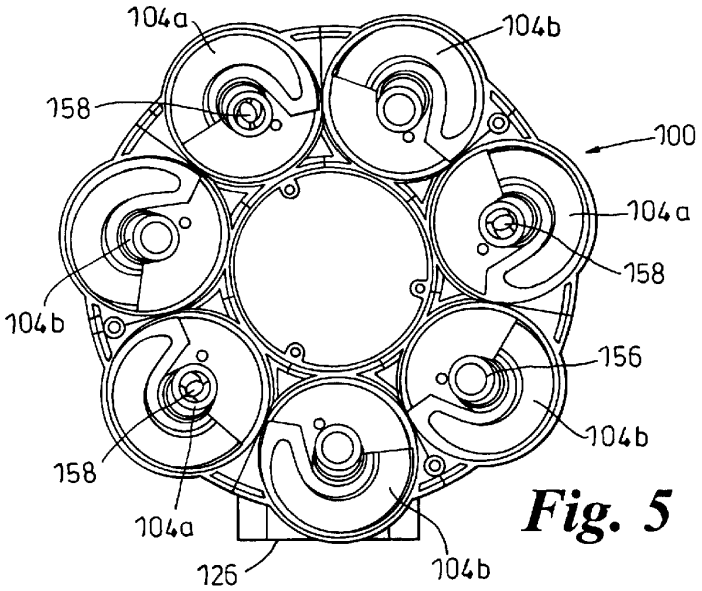

Fig. 5

GB 2 399 780 A

This print takes account of replacement documents submitted after the date of filing to enable the application to comply with the formal requirements of the Patents Rules 1995 At least one drawing originally filed was informal and the print reproduced here is taken from a later filed formal copy.

Original Printed on Recycled Paper

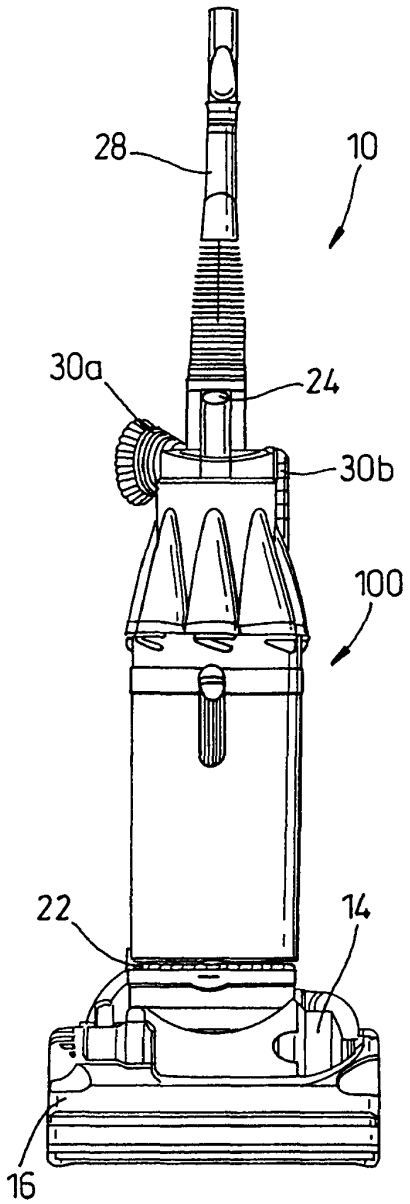
28
10
30a
24
30b
100
22
14
16

Fig. 1a

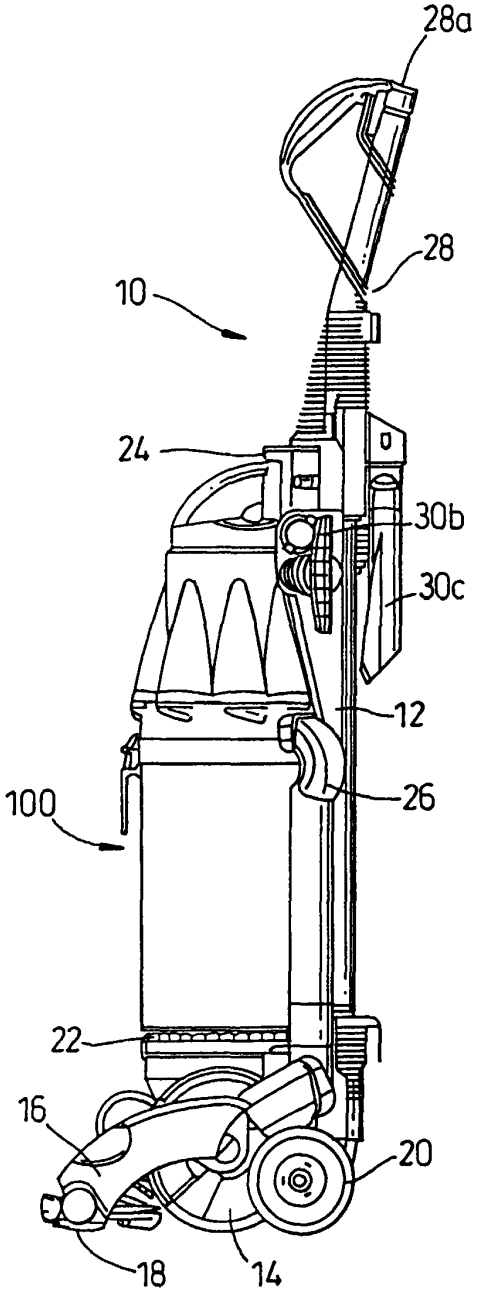
28a
28
10
24
30b
30c
12
26
100
22
16
20
18
14

Fig. 1b

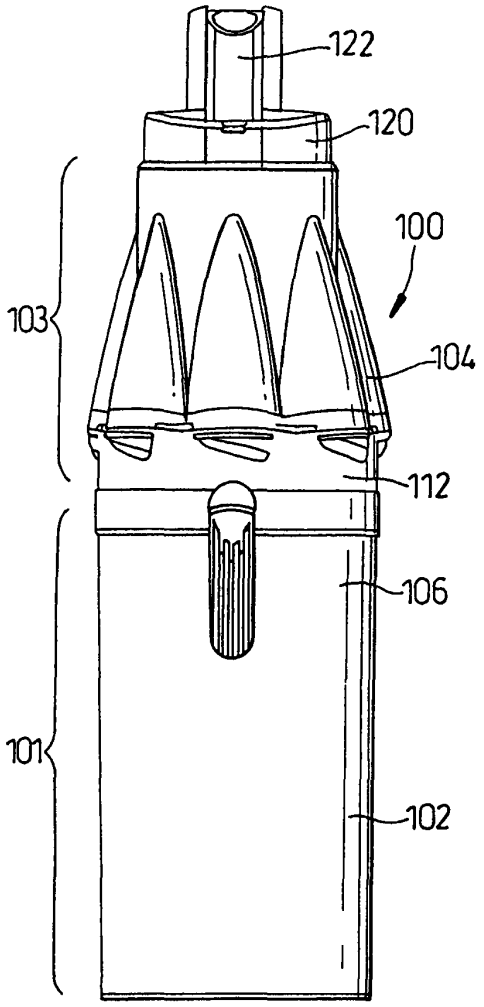

Fig. 2a

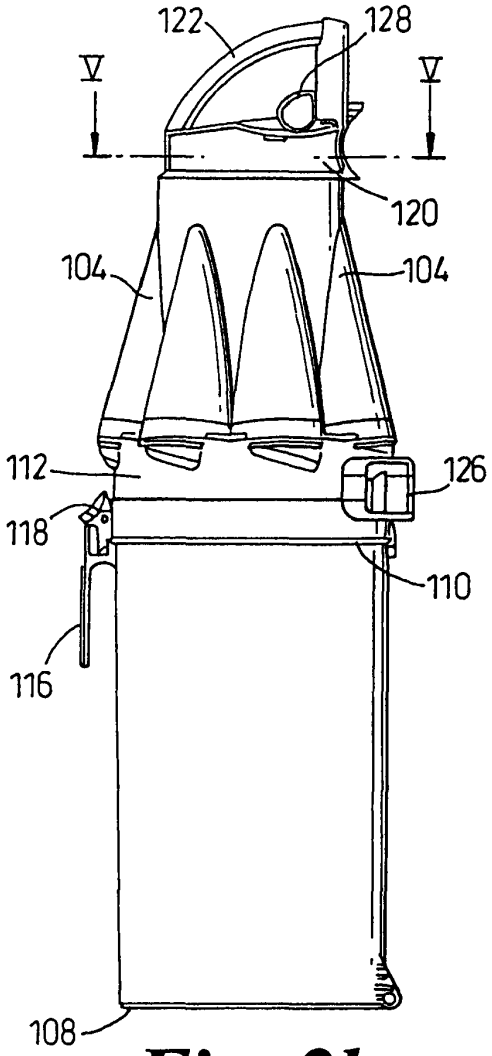

Fig. 2b

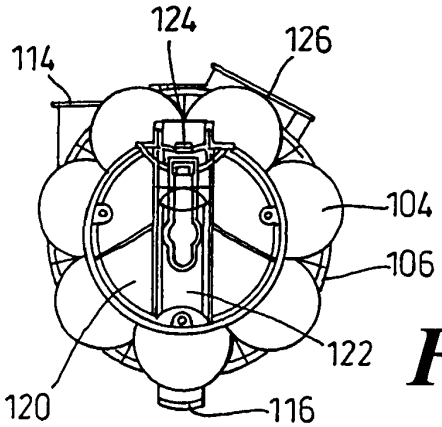

Fig. 2c

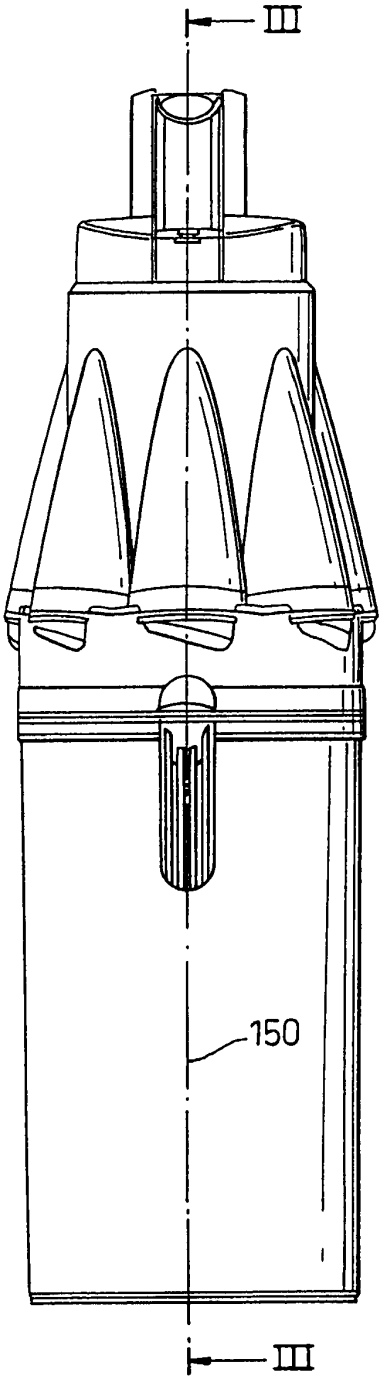
III
150
III

Fig. 3a

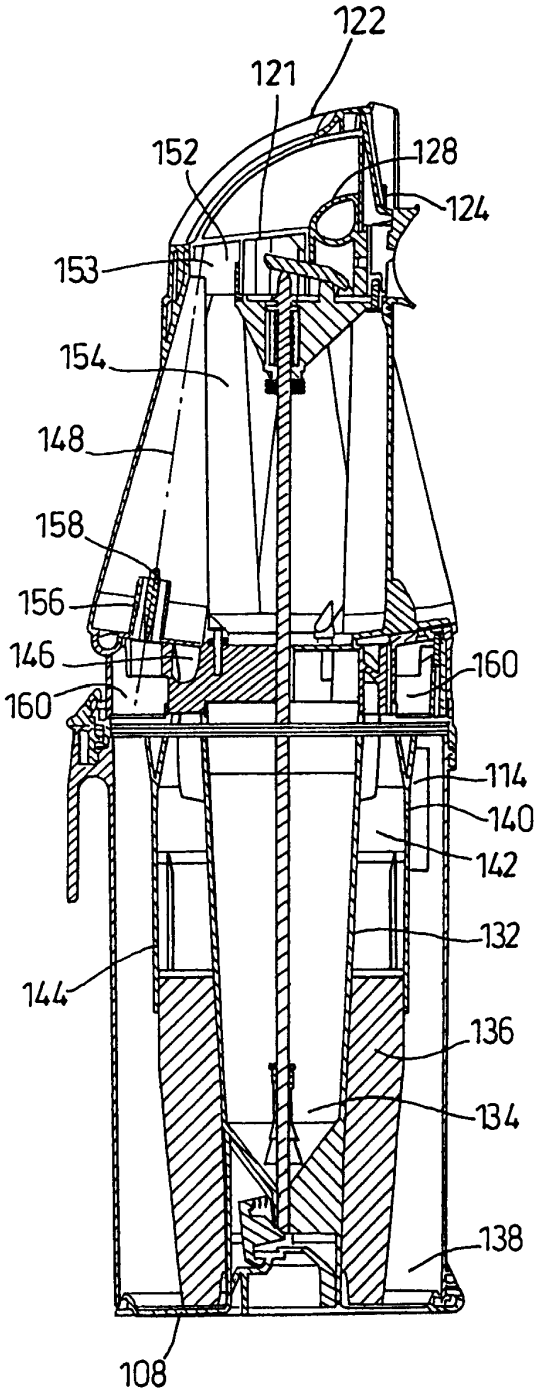
122
121
152
128
124
153
154
148
158
156
146
160
160
114
140
142
132
144
136
134
138
108

Fig. 3b

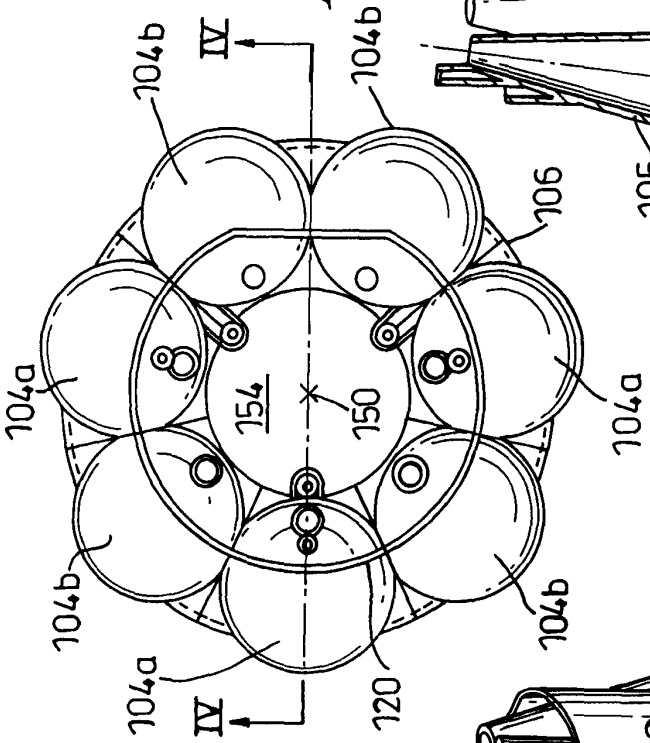

Fig. 4b

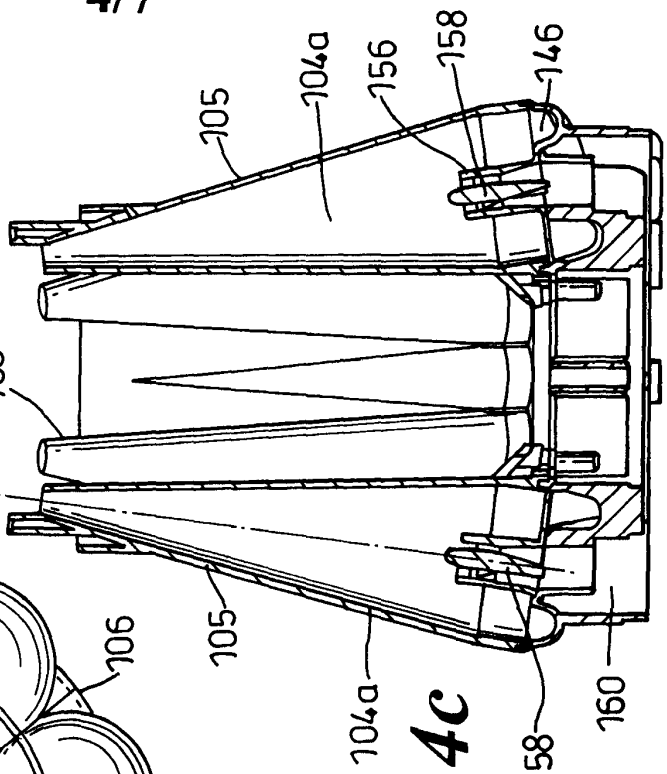

Fig. 4c

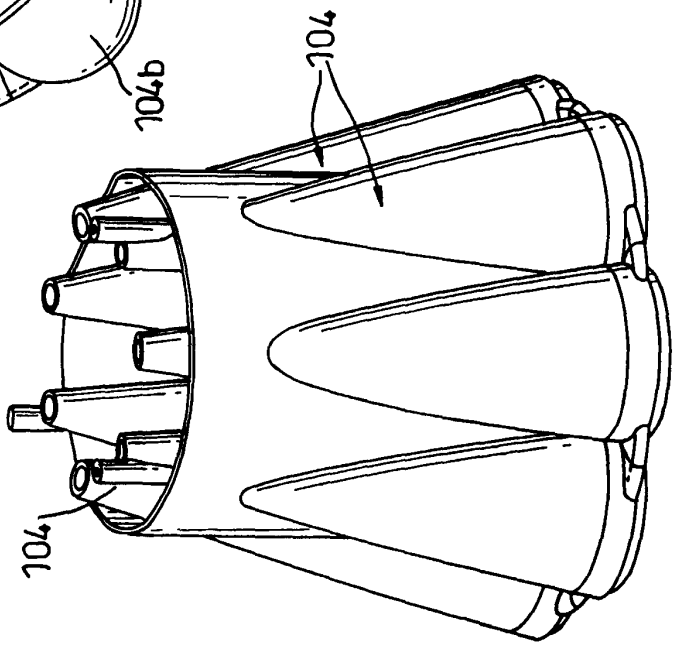

Fig. 4a

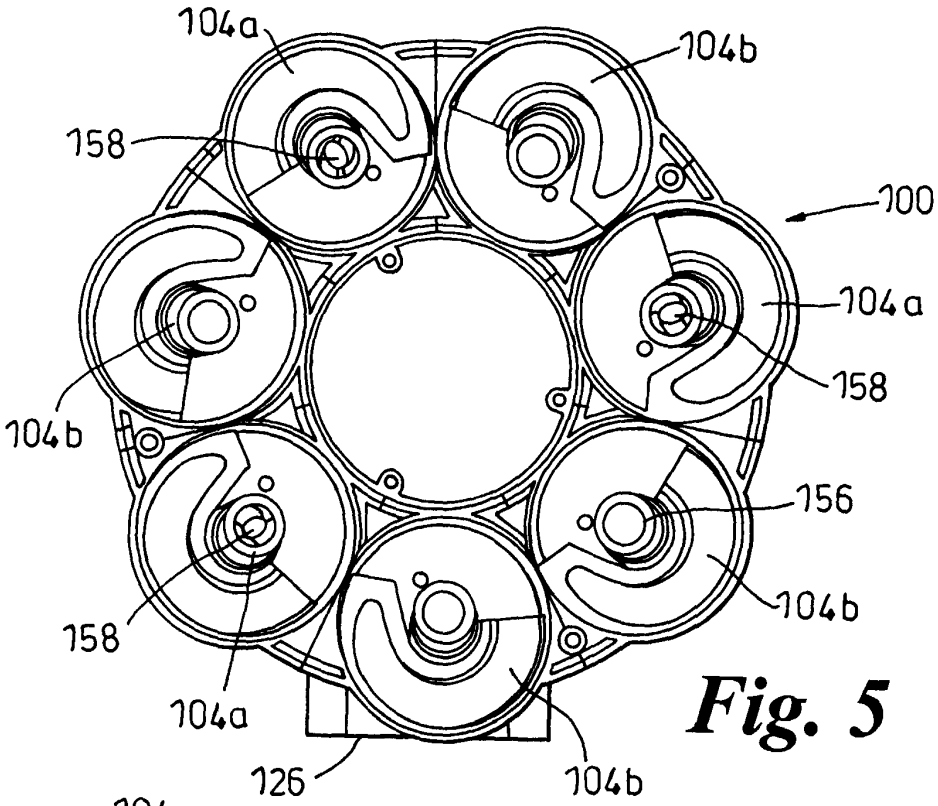
104a
104b
158
100
104a
158
104b
156
104b
158
104a
126
104b

Fig. 5

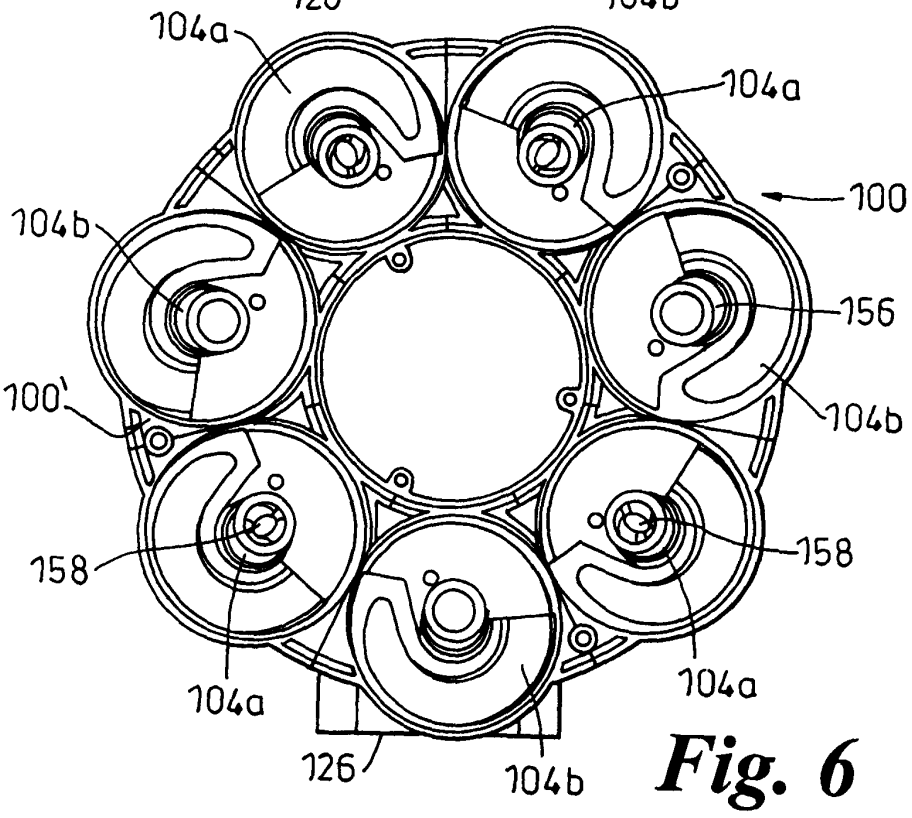
104a
104a
100
104b
156
100'
104b
158
158
104a
104a
126
104b

Fig. 6

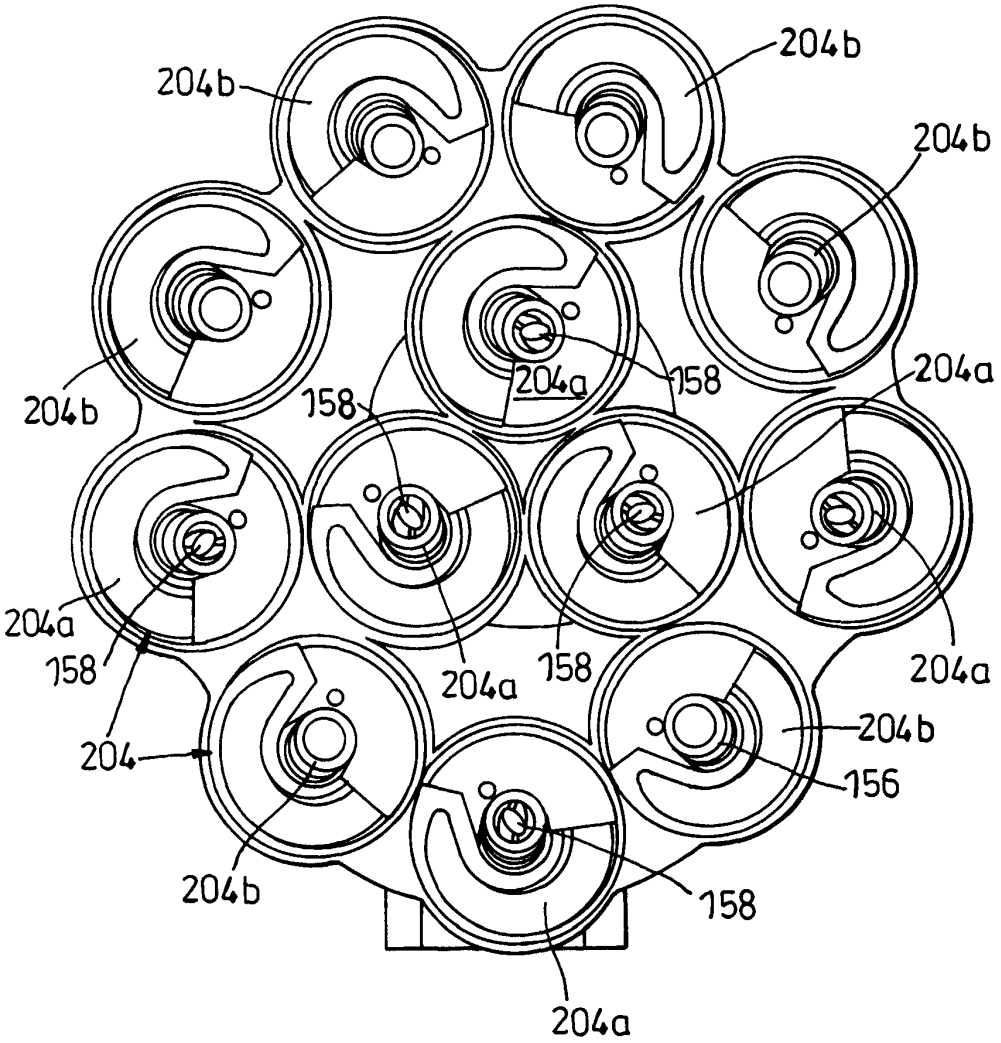
204b
204b
204b
204b
204a
158
158
204a
204a
158
204a
158
204a
204
204b
156
204b
158
204a

Fig. 7

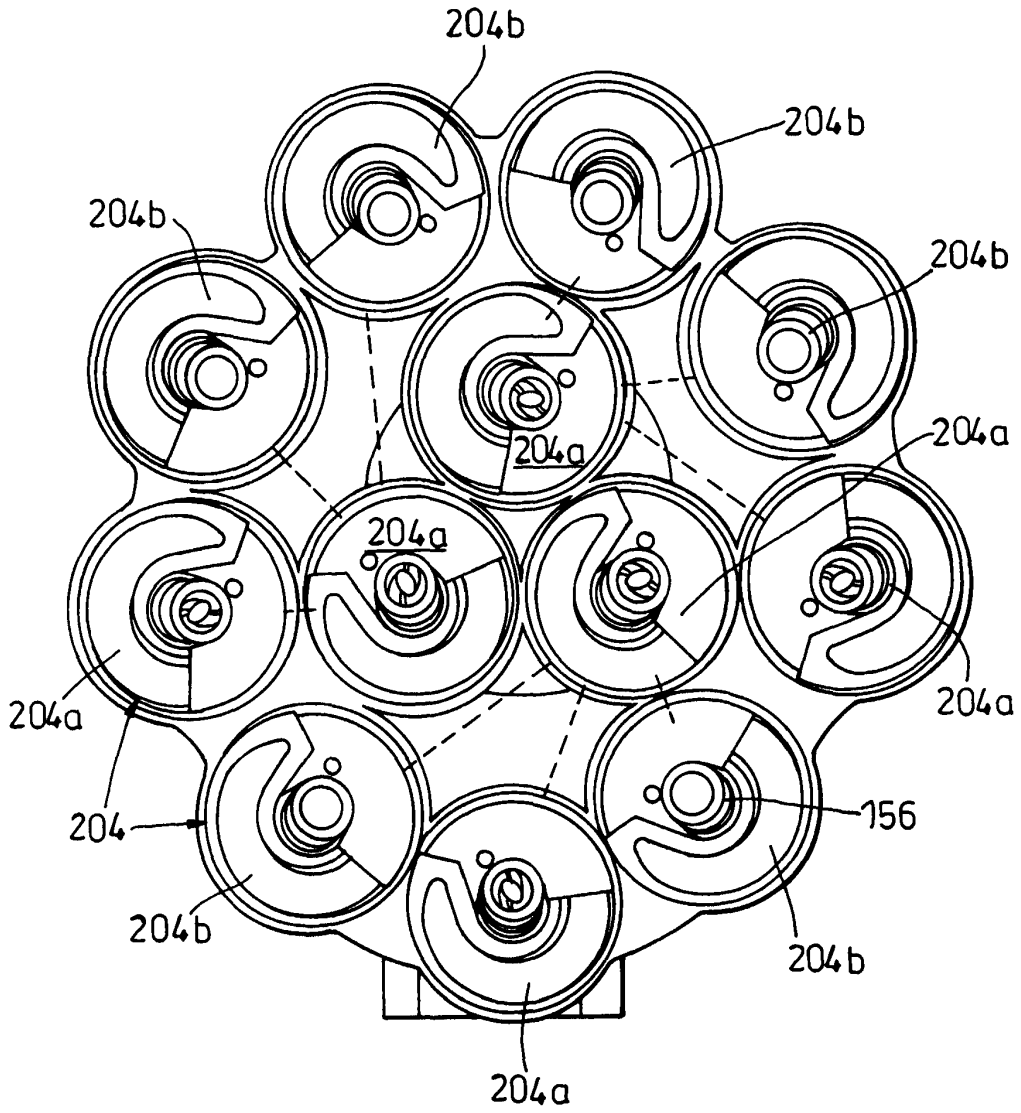
204b
204b
204b
204b
204a
204a
204a
204a
204a
204
156
204b
204b
204a

Fig. 8

Cyclonic Separating Apparatus

The invention relates to cyclonic separating apparatus Particularly, but not exclusively, the invention relates to cyclonic separating apparatus for use in a vacuum cleaner

It is well known to separate particles, such as dirt and dust particles, from a fluid flow using a cyclonic separator. A cyclonic separator generally comprises a cyclone body having a tangential inlet Dirt laden fluid enters the inlet and follows a helical path around the interior of the cyclone body. Centrifugal forces act on the entrained particles so as to separate the particles from the flow The separated particles collect at the base of the cyclone body for subsequent removal from the apparatus. The cleaned flow commonly changes direction to form a vortex core which exits the cyclone body via a fluid outlet During the operation of the cyclonic separator the precession of the vortex core around the interior of the fluid outlet, or vortex finder, causes a significant amount of noise An example of apparatus which aims to overcome this problem is shown in EP 1066115 which describes a cyclonic separator having a single upstream cyclone and a single downstream cyclone. A centrebody is provided in the vortex finder of the downstream cyclone so as to stabilise the vortex core and reduce the level of noise

Cyclonic separators having a number of cyclones operating in parallel are known Generally, in this type of arrangement, each individual cyclone is small in comparison to an equivalent single cyclone separator. This has the effect of increasing the centrifugal forces acting on the particles which, in turn, increases the separation efficiency of the separator However, a disadvantage of this arrangement is that there is an increased likelihood of dust accumulating in the parallel cyclones because the dimensions of the cyclones are comparatively small.

Vacuum cleaners incorporating cyclonic separators having cyclones arranged in parallel are known Examples of such machines include models DC07 and DC08 manufactured by Dyson Limited Each cyclone in the arrangement of parallel cyclones has a centrebody in the vortex finder to prevent high levels of noise being generated

It is an object of the present invention to provide an improved cyclonic separator, incorporating parallel cyclones, in which the risk of cone blockage is kept to a minimum whilst also ensuring that the level of noise generated at the vortex finder is minimised

The invention provides apparatus for separating particles from a fluid flow comprising a plurality of cyclones arranged in parallel with one another, each cyclone having a fluid inlet and a fluid outlet, the plurality of cyclones consisting of a number of first cyclones and a number of second cyclones, the first cyclones each having a fluid outlet in which a centrebody is provided and the second cyclones each having a fluid outlet in which no centrebody is provided In the claimed arrangement, the presence of the first cyclones achieves the aim of keeping the level of noise generated to an acceptable level, whilst the presence of the second cyclones ensures that the risk of blockage is reduced

Preferably, the total number of cyclones is an odd number and the number of first cyclones is one less than the number of second cyclones Alternatively, the total number of cyclones is an odd number and the number of first cyclones can be one more than the number of second cyclones.

Equally, the total number of cyclones can be an even number and the number of first cyclones is equal to the number of second cyclones In these preferred arrangements, an advantageous balance is reached between achieving low levels of noise and minimising the risk of the cyclones blocking.

Preferably, the cyclones are arranged in groups, each group having a common fluid inlet In this configuration, the apparatus has a simplified construction and can be manufactured more easily. More preferably, the same number of cyclones is provided in each group In a preferred embodiment, each group consists of equal numbers of first cyclones and second cyclones.

Preferably, a further cyclone is provided upstream of the first and second cyclones. Provision of this further cyclone allows larger debris to be separated out of the flow before entering the first and second cyclones. More preferably, the first and second cyclones are arranged so as to be inverted with respect to the orientation of the further cyclone. In this arrangement the length of the flow path between the further cyclone and the first and second cyclones is reduced. This has the effect of achieving a minimum pressure drop across the apparatus which results in an increase in the separation efficiency.

Other preferred features are set out in the subsidiary claims.

Embodiments of the invention will now be described with reference to the accompanying drawings, wherein

Figures 1a and 1b are front and side views, respectively, of a vacuum cleaner incorporating cyclonic separating apparatus according to the invention;

Figures 2a, 2b and 2c are front, side and plan views, respectively, of a first embodiment of cyclonic separating apparatus forming part of the vacuum cleaner of Figures 1a and 1b;

Figures 3a and 3b are front and sectional side views, respectively, of the cyclonic separating apparatus of Figures 2a, 2b and 2c, Figure 3b being taken along line III-III of Figure 3c;

Figures 4a, 4b and 4c are perspective, plan and sectional side views, respectively, of a cyclone portion of the cyclonic separating apparatus of Figures 2a and 2b, Figure 4c being taken along line IV-IV of Figure 4b;

Figure 5 is a sectional plan view of the cyclone portion of Figure 4b;

Figure 6 is a sectional plan view of an alternative configuration of the cyclone portion shown in Figure 5; and

Figures 7 and 8 are sectional plan views of alternative configurations of a cyclone portion of a cyclonic separating apparatus according to a further embodiment of the invention.

Figures 1a and 1b show a domestic vacuum cleaner 10 incorporating cyclonic separating apparatus 100 according to the present invention. The vacuum cleaner 10 comprises an upstanding body 12 at a lower end of which is located a motor casing 14 A cleaner head 16 is mounted in an articulated fashion on the motor casing 14. A suction inlet 18 is provided in the cleaner head 16 and wheels 20 are rotatably mounted on the motor casing 14 to allow the vacuum cleaner 10 to be manoeuvered over a surface to be cleaned

The upstanding body 12 further incorporates a hose and wand assembly 28 which may be retained in the configuration shown in the drawings so as to function as a handle for manoeuvering the vacuum cleaner 10 over a surface to be cleaned Alternatively, the hose and wand assembly 28 may be released to allow the distal end 28a of the wand to be used in conjunction with a floor tool (not shown) to perform an above-the-floor cleaning function, eg on stairs, upholstery, etc. The structure and operation of the hose and wand assembly 28 is not material to the present invention and will not be described any further here. Also, several tools and accessories 30a, 30b, 30c are releasably mounted on the upstanding body 12 for storage purposes between periods of use

The cyclonic separating apparatus 100 is mounted on the upstanding body 12 above the motor casing 14 and is seated on a generally horizontal surface formed by a filter cover 22 The filter cover 22 is located above the motor casing 14 and provides a cover for a post-motor filter (not shown) The cyclonic separating apparatus 100 is also secured to the upstanding body 12 by means of a clip 24 located at the top of the cyclonic separating apparatus 100 The upstanding body 12 incorporates upstream ducting (not

shown) for carrying dirty air to an inlet of the cyclonic separating apparatus 100 and downstream ducting 26 for carrying cleaned air away from the cyclonic separating apparatus 100.

In order for the cyclonic separation apparatus 100 to be brought into operation, the motor located in the motor casing 14 is activated so that air is drawn into the vacuum cleaner via either the suction inlet 18 or the distal end 28a of the hose and wand assembly 28. This dirty air (being air having dirt and dust entrained therein) is passed to the cyclonic separation apparatus 100 via the upstream ducting. After the air has passed through the cyclonic separation apparatus 100, it is ducted out of the cyclonic separating apparatus 100 and down the upstanding body 12 to the motor casing 14 via the downstream ducting 26. The cleaned air is used to cool the motor located in the motor casing 14 before being exhausted from the vacuum cleaner 10 via the filter cover 22.

This principle of operation of the vacuum cleaner 10 is known from the prior art. This invention is concerned with the cyclonic separation apparatus 100 which is illustrated in Figures 2a, 2b and 2c in isolation from the vacuum cleaner 10

The cyclonic separation apparatus 100 illustrated in Figure 2 comprises an upstream cyclone unit 101 consisting of a single upstream cyclone 102 and a downstream cyclone unit 103 consisting of a plurality of downstream cyclones 104 arranged in parallel The upstream cyclone 102 consists essentially of a cylindrical bin 106 having a closed base 108 The open upper end 110 of the cylindrical bin 106 abuts against an inlet support member 112 which defines an upper end of the upstream cyclone 102 and will be described in more detail below. An inlet port 114 is provided in the cylindrical bin 106 in order to allow dirty air to be introduced to the interior of the upstream cyclone 102 The inlet port 114 is shaped, positioned and configured to communicate with the upstream ducting which carries dirt-laden air from the cleaner head 16 to the cyclonic separating apparatus 100. A handle 116 and a catch 118 are provided on the cylindrical bin 106 and the inlet support member 112 respectively in order to provide means for

releasing the cylindrical bin 106 from the inlet support member 112 when the cylindrical bin 106 requires to be emptied A seal (not shown) can be provided between the cylindrical bin 106 and the inlet support member 112 if required

Figures 1 to 6 show cyclonic separating apparatus 100 incorporating seven downstream cyclones 104 The downstream cyclones 104 are equi-angularly spaced about the central longitudinal axis 150 of the downstream cyclone unit 103, which is coincident with the longitudinal axis of the upstream cyclone unit 101 Each downstream cyclone 104 is frusto-conical in shape with the larger end thereof located lowermost and the smaller end uppermost Each downstream cyclone 104 has a longitudinal axis 148 (see Figure 3b) which is inclined slightly towards the longitudinal axis 150 of the downstream cyclone unit 103 Also, the outermost point of the lowermost end of each downstream cyclone 104 extends radially further from the longitudinal axis 150 of the downstream cyclone unit 103 than the wall of the cylindrical bin 106 The uppermost ends of the downstream cyclones 104 project inside an upper portion 120 which extends upwardly from the surfaces of the downstream cyclones 104. The upper portion 120 supports a handle 122 by means of which the entire cyclonic separation apparatus 100 can be carried A catch 124 is provided on the handle 122 for the purposes of securing the cyclonic separation apparatus 100 to the upstanding body 12 at the upper end thereof An outlet port 126 is provided in the inlet support member 112 for conducting cleaned air out of the cyclonic separating apparatus 100 The outlet port 126 is arranged and configured to co-operate with the downstream ducting 26 for carrying the cleaned air to the motor casing 14 The upper portion 120 also carries an actuating lever 128 designed to activate a mechanism for opening the base 108 of the cylindrical bin 106 for emptying purposes as mentioned above.

The internal features of the cyclonic separating apparatus 100 will now be described with reference to Figure 3b Figure 3a corresponds to Figure 2a and indicates the line III-III on which the section of Figure 3b is taken

The internal features of the upstream cyclone 102 include an internal wall 132 extending the entire length thereof The internal space defined by the internal wall 132 communicates with the interior of the upper portion 120 as will be described below The purpose of the internal wall 132 is to define a collection space 134 for fine dust Located inside the internal wall 132 and in the collection space 134 are components for allowing the base 108 to open when the actuating lever 128 is actuated The precise details and operation of these components is immaterial to the present invention and will not be described any further here

Mounted externally of the internal wall 132 are four equi-spaced baffles or fins 136 which project radially outwardly from the internal wall 132 towards the cylindrical bin 106 These baffles 136 assist with the deposition of large dirt and dust particles in the collection space 138 defined between the internal wall 132 and the cylindrical bin 106 adjacent the base 108. The particular features of the baffles 136 are described in more detail in EP 1098586.

Located outwardly of the internal wall 132 in an upper portion of the upstream cyclone 102 is a shroud 140. The shroud extends upwardly from the baffles 136 and, together with the internal wall 132, defines an air passageway 142 The shroud 140 has a perforated portion 144 allowing air to pass from the interior of the upstream cyclone 102 to the air passageway 142 The air passageway 142 communicates with the inlet 146 of each of the downstream cyclones 104. Each inlet 146 is located in the inlet support member 112 and is arranged in the manner of a scroll so that air entering each downstream cyclone 104 is forced to follow a helical path within the respective downstream cyclone 104 The detail of the inlets 146 will be described in more detail below.

The upper ends of the downstream cyclones 104 project inside the upper portion 120, as previously mentioned The interior of the upper portion 120 defines a chamber 152 with which the upper ends of the downstream cyclones 104 communicate The upper portion 120 and the surfaces of the downstream cyclones 104 together define an axially

extending passageway or dust channel 154, located between the downstream cyclones 104, which communicates with the collection space 134 defined by the internal wall 132. It is thus possible for dirt and dust which exits the smaller ends of the downstream cyclones 104 to pass from the chamber 152 to the collection space 134 via the dust channel 154

The present invention is concerned with the configuration of the downstream cyclones 104 as shown in Figures 4a, 4b and 4c. The downstream cyclones 104 comprise first cyclones 104a and second cyclones 104b. Each of the first and second cyclones 104a, 104b has a tapering body 105, a fluid inlet 146 and a fluid outlet or vortex finder 156 Each vortex finder 156 is located centrally of the lowermost end of the respective first or second cyclone 104a, 104b and communicates with a chamber 160 of the cyclonic separating apparatus 100 The chamber 160 communicates with the outlet port 126 as shown in Figure 2c

The first cyclones 104a differ from the second cyclones 104b in that a centrebody 158 is provided in the vortex finder 156 of each first cyclone 104a. Each centrebody 158 has a generally cylindrical body with shaped ends. The shaping of the ends of the centrebodies 158 reduces the risk of turbulence being introduced to the fluid flow as a result of the presence of the centrebodies 158 Each centrebody 158 protrudes beyond the upstream end of the respective vortex finder 156 to a distance which results in the greatest level of noise reduction. This is described in greater detail in EP 1066115

Figure 5 shows the arrangement of first cyclones 104a and second cyclones 104b in the vacuum cleaner of Figures 1 to 4. In this arrangement, three first cyclones 104a and four second cyclones 104b are provided in the cyclonic separating apparatus 100 In a clockwise direction, from the outlet port 126, the positioning of the cyclones in the apparatus 100 is a second cyclone 104b, a first cyclone 104a, a second cyclone 104b, a first cyclone 104a, second cyclone 104b, a first cyclone 104a and a second cyclone 104b

An alternative configuration is shown in Figure 6 in which four first cyclones 104a and three second cyclones 104b are provided in the cyclonic separating apparatus The positioning of the cyclones 104a, 104b is, in a clockwise direction from the outlet port 126, a second cyclone 104b, a first cyclone 104a, a second cyclone 104b, a first cyclone 104a, a first cyclone 104a, a second cyclone 104b and a first cyclone 104a

The mode of operation of the cyclonic separating apparatus 100 described above is as follows. Dirty air (being air in which dirt and dust is entrained) enters the cyclonic separating apparatus 100 via the inlet port 114. The arrangement of the inlet port 114 is essentially tangential to the wall of the cylindrical bin 106 which causes the incoming air to follow a helical path around the inside of the cylindrical bin 106. Larger dirt and dust particles, along with fluff and other large debris, are deposited in the collection space 138 adjacent the base 108 by virtue of the effect of centrifugal forces acting on the particles, as is well known. Partially cleaned air travels inwardly and upwardly away from the base 108, exiting the upstream cyclone 102 via the perforated portion 144 of the shroud 140 The partially-cleaned air then moves along the air passageway 142 in which it is divided into seven portions. Each portion enters either one of the first cyclones 104a or one of the second cyclones 104b via the respective inlet 146 Each inlet 146 forces the incoming air to follow a helical path inside the cyclone 104a, 104b. The tapering bodies 105 of the first and second cyclones 104a, 104b cause further, intense cyclonic separation to take place inside each of the first and second cyclones 104a, 104b so that very fine dirt and dust particles are separated from the main airflow. The dirt and dust particles exit the uppermost end of each of the first and second cyclones 104a, 104b whilst the cleaned air returns to the lower end of the respective cyclone 104a, 104b along the axis 148 thereof. The cleaned air exits via the vortex finder 156 In the case of the first cyclones 104a, the level of noise generated by the exiting airflow will be considerably less than the noise generated in the second cyclones 104b because of the presence of the centrebodies 158 The total noise generated as the cleaned air exits the first and second cyclones 104a, 104b is within acceptable limits Meanwhile, the risk of the second cyclones 104b becoming blocked at the vortex finders thereof is considerably reduced The cleaned air passes from the vortex finders

156 into the annular chamber 160 and from there to the outlet port 126 Meanwhile, the dirt and dust which has been separated from the airflow falls from the chamber 152 through the passageway 154 to the collection space 134

A further embodiment of the invention is shown in Figure 7 in which twelve parallel cyclones 204 are provided. Nine of the cyclones 204 are located in an outer ring and three cyclones are located in an inner ring. The cyclones 204 are equi-angularly spaced about the respective rings. This arrangement is used in the Dyson vacuum cleaner model DC08 and is described in more detail in co-pending application GB 0203723 2. The configuration shown in Figure 7 includes six first cyclones 204a and six second cyclones 204b All of the cyclones 204 located in the inner ring are first cyclones 204a. All of the second cyclones 204b are located in the outer ring.

An alternative arrangement of the further embodiment is shown in Figure 8 in which the first cyclones 204a and the second cyclones 204b are arranged into groups. Three groups are shown in Figure 8. As in Figure 7, the three cyclones located in the inner ring are all first cyclones 204a Each group comprises four cyclones; a first cyclone 204a from the inner ring 210 and three further cyclones The further cyclones comprise one first cyclone 204a and two second cyclones 204b. The dotted lines shown in Figure 8 indicate which of the first and second cyclones 204a, 204b belong to the same group.

The invention is not intended to be limited to the precise features of the embodiments described above. Other variations and modifications will be apparent to a skilled reader. For example, it is not necessary, although it is preferred, for the number of first and second cyclones to be equal or nearly so. If desired, the number of first cyclones can be significantly higher than the number of second cyclones or vice versa. Furthermore, the precise shape of the centrebodies is not essential to the principle behind the invention It is envisaged that the cyclonic separating apparatus would be incorporated into a vacuum cleaner but it will be appreciated that the apparatus may also be utilised in any other suitable particle separation apparatus

Claims

1 Apparatus for separating particles from a fluid flow comprising a plurality of cyclones arranged in parallel with one another, each cyclone having a fluid inlet and a fluid outlet, the plurality of cyclones consisting of a number of first cyclones and a number of second cyclones, the first cyclones each having a fluid outlet in which a centrebody is provided and the second cyclones each having a fluid outlet in which no centrebody is provided

2. Apparatus as claimed in Claim 1, wherein the total number of cyclones is an odd number

3 Apparatus as claimed in Claim 2, wherein the number of first cyclones is one less than the number of second cyclones

4 Apparatus as claimed in Claim 2, wherein the number of first cyclones is one more than the number of second cyclones.

5. Apparatus as claimed in Claim 1, wherein the total number of cyclones is an even number

6 Apparatus as claimed in Claim 5, wherein the number of first cyclones is equal to the number of second cyclones.

7 Apparatus as claimed in any one of the preceding claims, wherein the cyclones are arranged in groups, each group having a common fluid inlet.

8. Apparatus as claimed in Claim 7, wherein the same number of cyclones is provided in each group

9. Apparatus as claimed in Claim 7 or 8, wherein each group has the same number of first cyclones.

10 Apparatus as claimed in any one of Claims 7 to 9, wherein each group consists of equal numbers of first cyclones and second cyclones

11. Apparatus as claimed in any one of the preceding claims, wherein the fluid outlets of the first cyclones are located adjacent the fluid outlets of the second cyclones.

12 Apparatus as claimed in any one of the preceding claims, wherein a further cyclone is provided upstream of the first and second cyclones.

13 Apparatus as claimed in Claims 11 and 12, wherein the first and second cyclones are arranged so as to be inverted with respect to the orientation of the further cyclone.

14. Apparatus as claimed in Claim 13, wherein the first and second cyclones are arranged so that the fluid inlets thereof are lowermost and the further cyclone is arranged so that the fluid inlet thereof is uppermost.

15. Apparatus as claimed in any one of the preceding claims, wherein a shroud is provided upstream of the first and second cyclones such that, in use, the fluid flow passes through the shroud before entering the fluid inlets of each of the said cyclones.

16 Apparatus for separating particles from a fluid flow substantially as hereinbefore described with reference to any one of the embodiments shown in the accompanying drawings

17. A vacuum cleaner incorporating apparatus for separating particles from a fluid flow according to any one of the preceding claims

The Patent Office

INVESTOR IN PEOPLE

Application No:	GB 0307155.2	**Examiner:**	Jason Scott
Claims searched:	1-17	**Date of search:**	2 September 2003

Patents Act 1977 : Search Report under Section 17

Documents considered to be relevant:

Category	Relevant to claims	Identity of document and passage or figure of particular relevance	
A		GB 2372435 A	DYSON LTD See whole document
A		GB 2372434 A	DYSON LTD See whole document
A		GB 2372433 A	DYSON LTD See whole document
A		GB 2374305 A	DYSON LTD See whole document
A		GB 1533435 A	NAT RES DEV See whole document

Categories:

X	Document indicating lack of novelty or inventive step	A	Document indicating technological background and/or state of the art.
Y	Document indicating lack of inventive step if combined with one or more other documents of same category	P	Document published on or after the declared priority date but before the filing date of this invention
&	Member of the same patent family	E	Patent document published on or after, but with priority date earlier than, the filing date of this application

Field of Search:

Search of GB, EP, WO & US patent documents classified in the following areas of the UKC[V]:

A4F; B2P

Worldwide search of patent documents classified in the following areas of the IPC[7]:

A47L; B04C

The following online and other databases have been used in the preparation of this search report:

ONLINE: WPI, JAPIO, EPODOC